HEAT&GLO™

No one builds a better fire

Service Parts

Gas Stove - DV

Tiara II-CE

Beginning Manufacturing Date: Feb 2002
Ending Manufacturing Date: Aug 2003

TIARAII-BK-CE, TIRARII-AL-CE, TIARAII-GR-CE

Log Set Assembly

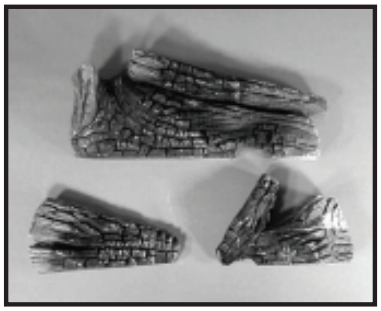

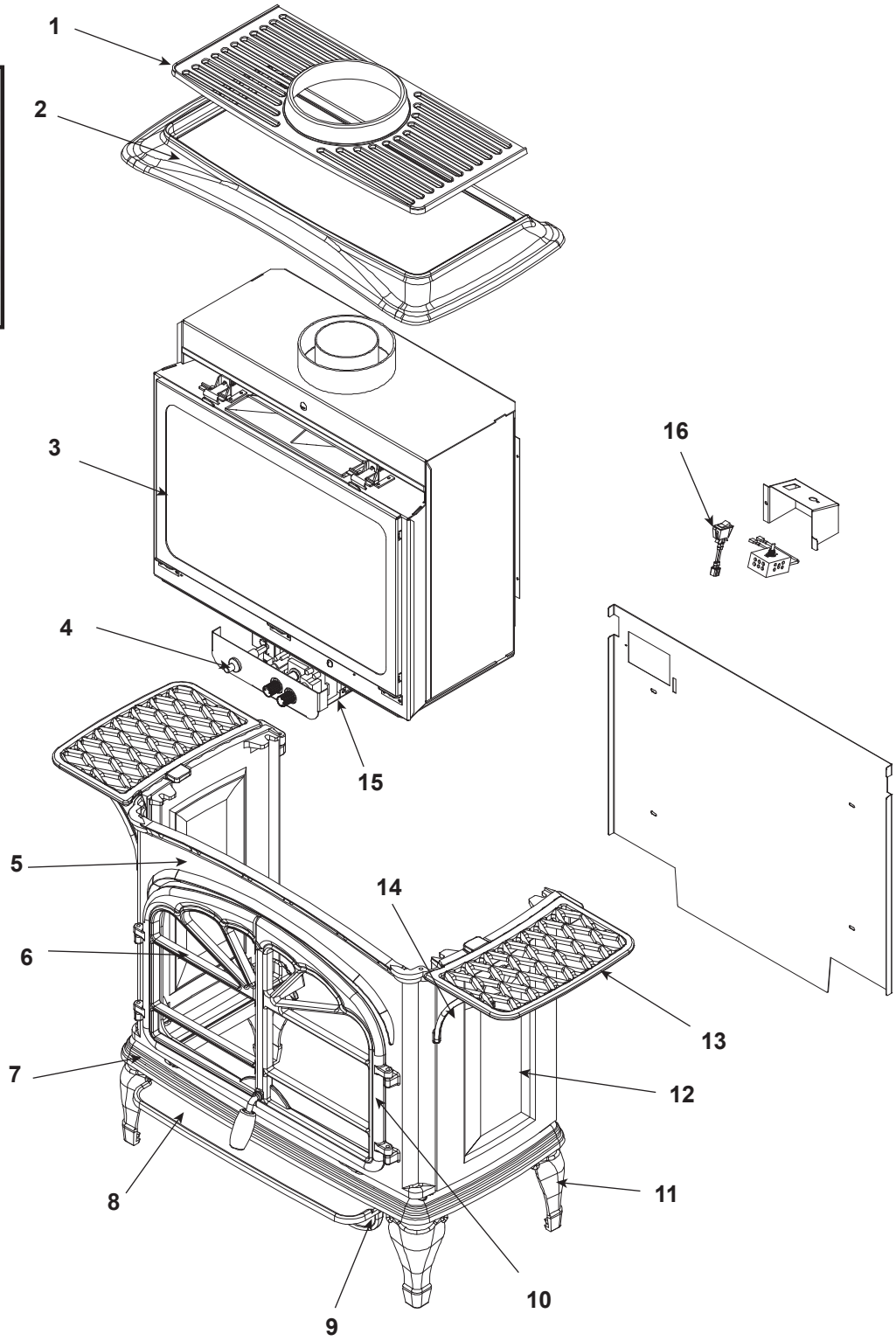

Part number list on following page.

06/20

HEAT&GLO™

No one builds a better fire

Service Parts

Tiara II-CE

Beginning Manufacturing Date: Feb 2002
Ending Manufacturing Date: Aug 2003

IMPORTANT: THIS IS DATED INFORMATION. Parts must be ordered from a dealer or distributor. **Hearth and Home Technologies does not sell directly to consumers**. Provide model number and serial number when requesting service parts from your dealer or distributor.

ITEM	DESCRIPTION	COMMENTS	PART NUMBER
1	Log Set Assembly	**No longer available**	844-9330
2	Grill	**No longer available**	282-732-BK
3	Top	**No longer available**	282-733-BK
4	Glass Door Assembly	**No longer available**	GLA-V2
		No longer available	844-6080
5	Piezo Ignitor		291-513
6	Front	**No longer available**	282-736-BK
7	Left Door	**No longer available**	282-742-BK
8	Base	**No longer available**	282-738-BK
9	Ashlip	**No longer available**	282-739-BK
10	Skirt	**No longer available**	282-740-BK
11	Right Door	**No longer available**	282-743-BK
12	Leg	**No longer available**	282-741-BK
13	Side	**No longer available**	282-737-BK
14	Shelf	**No longer available**	282-734-BK
15	Shelf Support		7010-129BK
16	Valve Assembly	**No longer available**	844-9450
17	ON/OFF Rocker Switch		060-521A
	Burner		SRV586-174A
	Burner Tube	**No longer available**	844-5000
	Orifice NG		SRV24220
	Orifice LP		SRV200-2630
	Pilot Assembly NG		200-2950
	Pilot Orifice NG		842-4260
	Pilot Orifice LP		842-4270
	Thermocouple		842-4250
	Thermopile		842-0250