HEAT&GLO®

No one builds a better fire

Service Parts **SUPREME-I25-IFT/SUPREME-I25-BIR**

25” Gas Insert - DV

Beginning Manufacturing Date: March 2019
Ending Manufacturing Date: Active

Traditional Log Set Assembly

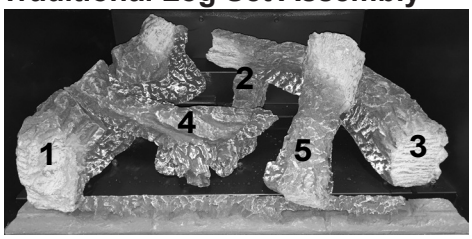

Birch Log Set Assembly

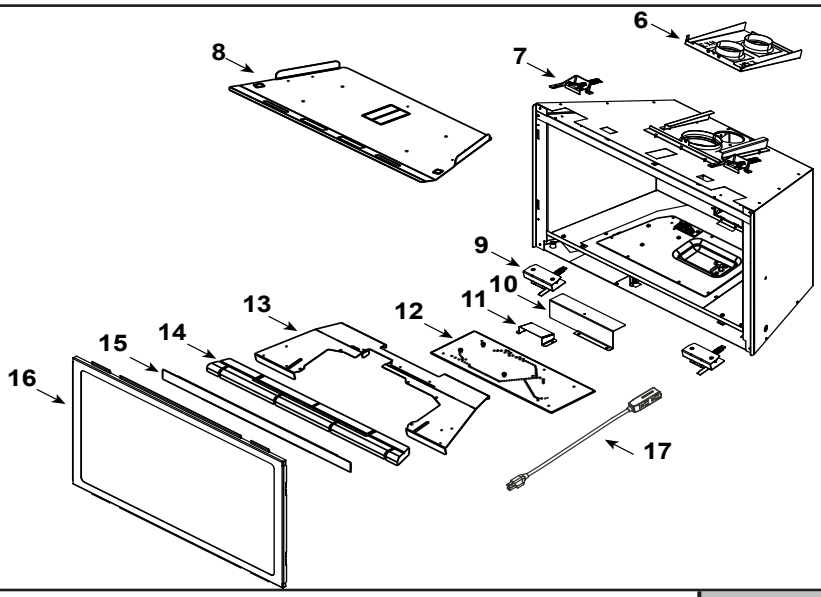

IMPORTANT: THIS IS DATED INFORMATION. Parts must be ordered from a dealer or distributor. **Hearth and Home Technologies does not sell directly to consumers**. Provide model number and serial number when requesting service parts from your dealer or distributor.

ITEM	DESCRIPTION	COMMENTS	PART NUMBER	Stocked at Depot
		Traditional	**Birch**	
	Log Assembly (Hearth Refractory not included)	LOGS-2531	LOGS-2531-BIRCH	
1	Log 1	SRV2531-711	**Must order complete assembly**	
2	Log 2	SRV2531-712		
3	Log 3	SRV2531-713		
4	Log 4	SRV2531-714		
5	Log 5	SRV2531-715		
6	Slide Plate Assembly		2532-014	
	Tool, Slide Plate (Multi-purpose)		2532-140	
	Gasket		2532-113	
7	Glass Clip Assembly, Top	Qty 2 req	2155-046	
8	Baffle, Firebox		2531-138	
9	Glass Clip Assembly, Bottom	Qty 2 req	2532-009	
10	Air Scoop		2532-135	
11	Pilot Shield		2532-153	
12	Burner Assembly		2531-007	**Y**
13	Base Pan		2531-130	
14	Hearth Refractory (Not for use with BRICK-MI25-TR/BRICK-MI25-HB)		SRV2540-704	
15	Seal, Glass Frame		2531-122	
16	Glass Door Assembly		GLA-2531	**Y**
17	Power Cord		SRV2532-320M	**Y**
	Fan		GFK-160A	**Y**

Additional service part numbers appear on following page.

No one builds a better fire

Beginning Manufacturing Date: March 2019
Ending Manufacturing Date: Active

#18 Valve Assembly

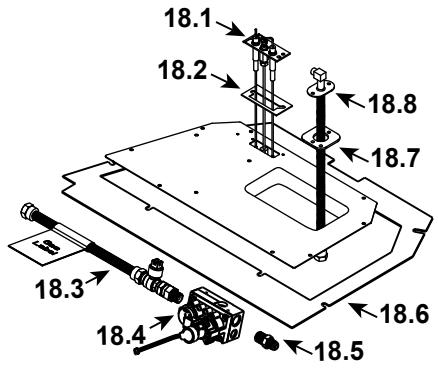

#19 Component Tray

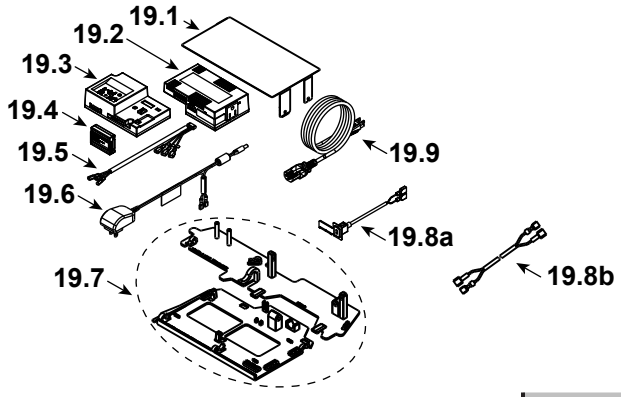

IMPORTANT: THIS IS DATED INFORMATION. Parts must be ordered from a dealer or distributor. **Hearth and Home Technologies does not sell directly to consumers**. Provide model number and serial number when requesting service parts from your dealer or distributor.

ITEM	DESCRIPTION	COMMENTS	PART NUMBER	Stocked at Depot
18.1	Pilot Assembly NG		2550-013	Y
	Pilot Assembly Propane		2550-014	Y
18.2	Pilot Gasket		2532-134	
18.3	Flex Ball Valve Assembly		2532-081	Y
18.4	Valve NG		SRV2166-302	Y
	Valve Propane		2166-303	Y
18.5	Male Connector	Pkg of 5	303-315/5	Y
18.6	Gasket, Valve Plate		2531-131	
18.7	Gasket, Bulkhead		438-407	
18.8	Bulkhead w/Flex Tube		SRV7000-156	Y
	Orifice NG (#40C)		582-840	Y
	Orifice Propane (#53C)		582-853	Y
19.1	Component Heat Shield		2532-144	Y
19.2	Module, B Type AC		SRV2326-150	Y
19.3	Module, IFT Control		SRV2326-130	Y
19.4	Module, RF FCC		SRV2326-120	Y
19.5	Harness, IFT 6 Pin Wiring		SRV2326-132	Y
19.6	6 Volt DC Power Adapter	**Post LC5818239**	2326-191	Y
	Transformer, 6 Volt Wall	**Pre LC5818239**	SRV2326-131	Y
	Jumper Wire, 36” Male/Female	**Pre LC5818239**	2159-310	Y
	Wall Switch Jumper Wire	**Pre LC5818239**	SRV2179-300	Y
19.7	Tray, Component & Wire		2532-172	Y
19.8a	Assembly, USB-C Bracket	**SN Range LC5673022 - LC6494692**	2532-301	Y
19.8b	40” Wire Harness	**Post LC6494692**	SRV2531-140	Y
19.9	Cable, B Type AC Module		SRV2326-152	Y

Additional service part numbers appear on following page.

HEAT&GLO®

No one builds a better fire

Service Parts

SUPREME-I25-IFT/SUPREME-I25-BIR

Beginning Manufacturing Date: March 2019
Ending Manufacturing Date: Active

IMPORTANT: THIS IS DATED INFORMATION. Parts must be ordered from a dealer or distributor. **Hearth and Home Technologies does not sell directly to consumers**. Provide model number and serial number when requesting service parts from your dealer or distributor.

ITEM	DESCRIPTION	COMMENTS	PART NUMBER	Stocked at Depot
	Battery Pack**	**Pre LC5673022**	SRV2326-134	**Y**
		Post LC5673022	SRV2326-142	
	Bolt, Level Leg	Qty 4 req	2073-162/24	**Y**
	Fan Dampener		SRV2532-686	
	Back Cover Plate (Fan Access)		SRV2532-166	
	Jumper Wires		SRV2187-198	**Y**
	Mineral Wool		050-721	
	RC400 Remote		SRV2326-110	**Y**
	Screw, Bottom Glass Clip	Qty 4 req	419-802/24	**Y**
	Touch up Paint		TUP-GBK-12	**Y**
	Vermiculite Embers		MYSTIC-EMBERS	
Conversion Kits				
	Conversion Kit NG		NGK-MI-IFT	**Y**
	Conversion Kit Propane		LPK-MI-IFT	**Y**
	Pilot Orifice NG		SRV593-528	**Y**
	Pilot Orifice Propane		593-526	**Y**
	Regulator NG		NGK-DXV-50	**Y**
	Regulator Propane		SRVLPK-DXV-50	**Y**

**Fuse for battery pack can be sourced locally, not a warranty item. Specs are 250v, 3A fuse, 3/4” long