HEARTH & HOME technologies

Service Parts

RB-30NI - RB-30PI

Radiant 30” Hearth Kit

Beginning Manufacturing Date: May 2024
Ending Manufacturing Date: Active

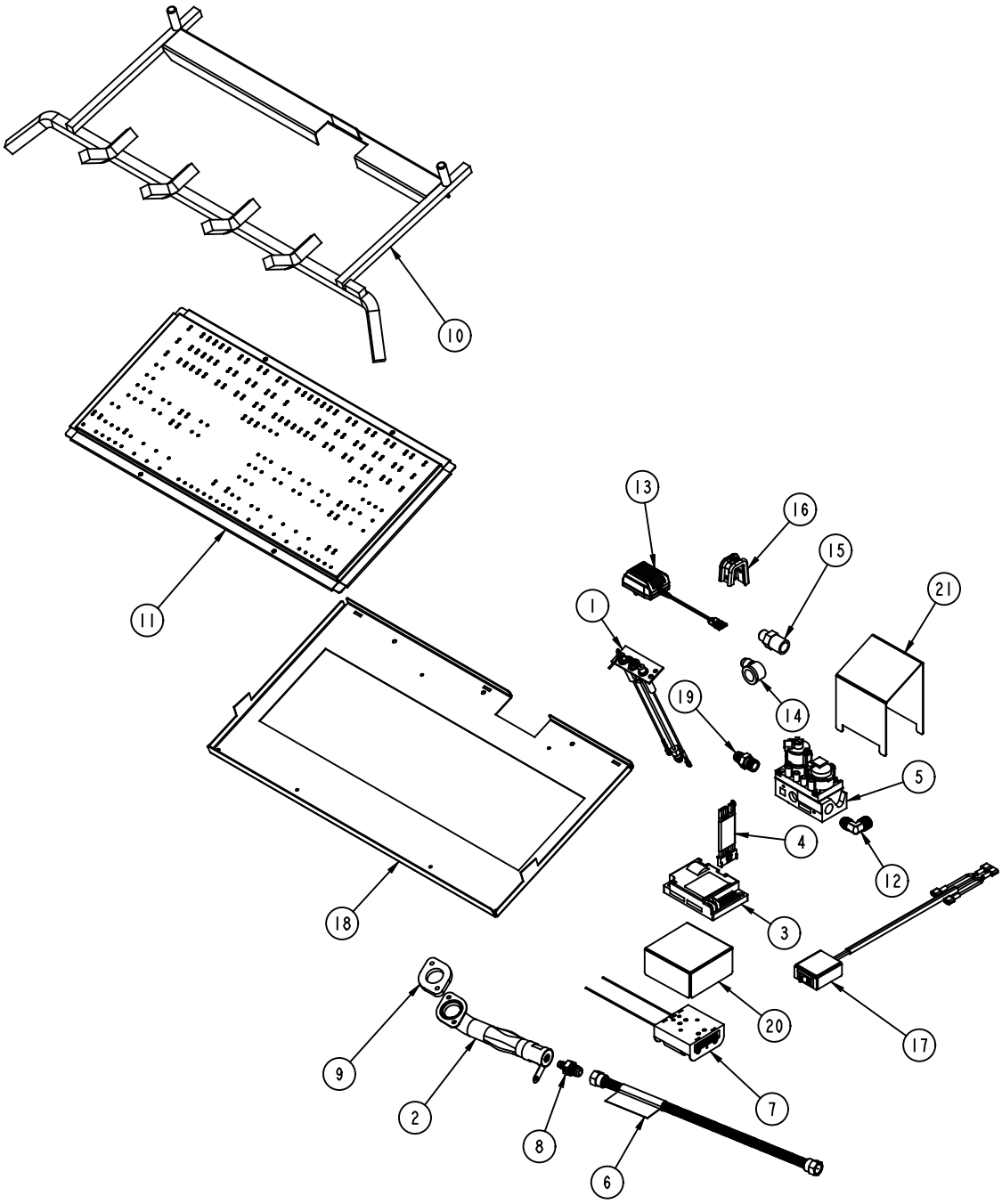

HEARTH & HOME technologies™

Service Parts

RB-30NI - RB-30PI

Beginning Manufacturing Date: May 2024
Ending Manufacturing Date: Active

IMPORTANT: THIS IS DATED INFORMATION. Parts must be ordered from a dealer or distributor. **Hearth and Home Technologies does not sell directly to consumers**. Provide model number and serial number when requesting service parts from your dealer or distributor.

ITEM	DESCRIPTION	COMMENTS	PART NUMBER	Stocked at Depot
1	Pilot Assembly	NG	SRV2106-169	**Y**
		LP	SRV2106-170	**Y**
2	Venturi Assembly (Includes gasket and screws)	NG	SRV4018-073	
		LP	SRV4099-033	
3	Control Module		SRV593-595	**Y**
4	Wire Assembly		SRV593-590	**Y**
5	Fixed Dexen Valve	NG	SRV593-500	**Y**
		LP	SRV593-501	**Y**
6	Flex Gas Line SS 16 NW		SRV4121-006	
7	Battery Pack		SRV593-594	**Y**
8	Orifice Flare	NG	SRV4095-346	**Y**
		LP	SRV4095-345	**Y**
9	Venturi Gasket		SRV4099-191	
10	Grate Assembly		SRV4661-036	
11	Burner Pan Weldement		SRV4661-005	
12	SAE 90 MLE Elbow 3/8TX 3/8		SRV27D7307	
13	3V Transformer	Accessory	SRV593-593	**Y**
14	3/8 Flare to 1/2 Female		SRV27D5134	
15	Fitting 1/2 MPT to 3/8 Flare		SRV27D7306	
16	Beam Clamp		SRV00F0545	
17	Switch Assemlby		SRV4660-011	
18	Chassis		SRV4661-107	
19	Male Connector		SRV303-315	
20	D Batt Shield		SRV4660-118	
21	Shield		SRV4660-114	
	Dual Lock Pair 2” Velcro (Not Shown)		SRV4121-200	
	RCB Remote (Not Shown)		RCB	
	Conversion Kits			
	LP Conversion Kit (Not Shown)		SRV4660-051	
	NG Conversion Kit (Not Shown)		SRV4660-050	