32” Electric Fireplace Insert

Beginning Manufacturing Date: Mar 2003
Ending Manufacturing Date: Jul 2005

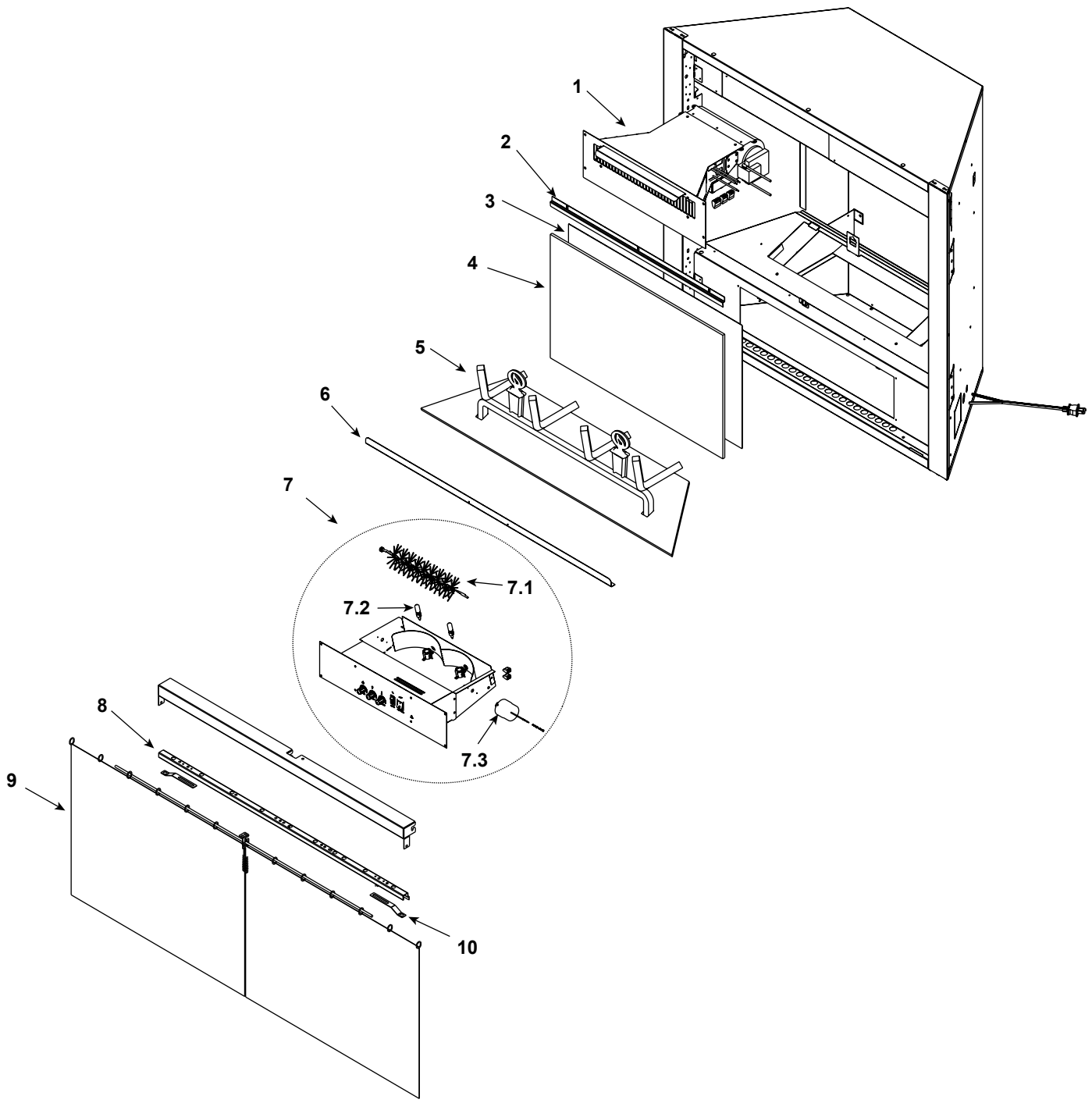

Part number list on following page.

QUADRA-FIRE® Service Parts

QV32E

Beginning Manufacturing Date: Mar 2003
Ending Manufacturing Date: Jul 2005

IMPORTANT: THIS IS DATED INFORMATION. When requesting service or replacement parts for your appliance please provide model number and serial number. All parts listed in this manual may be ordered from an authorized dealer.

ITEM	DESCRIPTION	COMMENTS	PART NUMBER	Stocked at Depot
	Electric Log Assy	**No longer available**	4030-055	
1	120VAC Heater Assembly (Must order both parts)	**No longer available**	SRV4030-541	
		No longer available	4050-104	
2	Upper Glass Retainer	**No longer available**	4030-218	
3	Lenticular Lens	**No longer available**	4030-840	
4	Acrylic Panel	**No longer available**	4038-810	
5	Grate Assembly	**No longer available**	4030-898	
6	Rock Retainer	**No longer available**	4030-219	
7	Light Tray Assembly	**No longer available**	SRV-020	
7.1	Flame Element Kit	**No longer available**	4030-200	
7.2	Halogen Light	Qty 2 req	33961	**Y**
7.3	Motor w/Vinyl Cover Assy	**No longer available**	4030-883	
8	31 in. Door Track	**No longer available**	4030-225	
9	Screen & Rod Assy	**No longer available**	4030-050	
10	Door Pivot Clip		SRV31527	
	Ember Bed	**No longer available**	4030-914	
	Light Receptacle	**No longer available**	33962	
	Light Shield	**No longer available**	4030-108	
	ON/OFF Switch Assembly	**No longer available**	4030-847	
	Power Cord	**No longer available**	4030-802	
	Reflective Flame Decal	**No longer available**	4021-190	
	Refractory Assy			
	Refractory Side LH	**No longer available**	4030-831	
	Refractory Side RH	**No longer available**	4030-832	
	Hearth Refractory LH	**No longer available**	4030-833	
	Hearth Refractory RH	**No longer available**	4030-834	
	Installation Manual		4030-240	