PH18NM (Natural Gas Manual Control)
PH18NV (Natural Gas Millivolt Control)

PH18PM (Propane Manual Control)
PH18PV (Propane Millivolt Control)

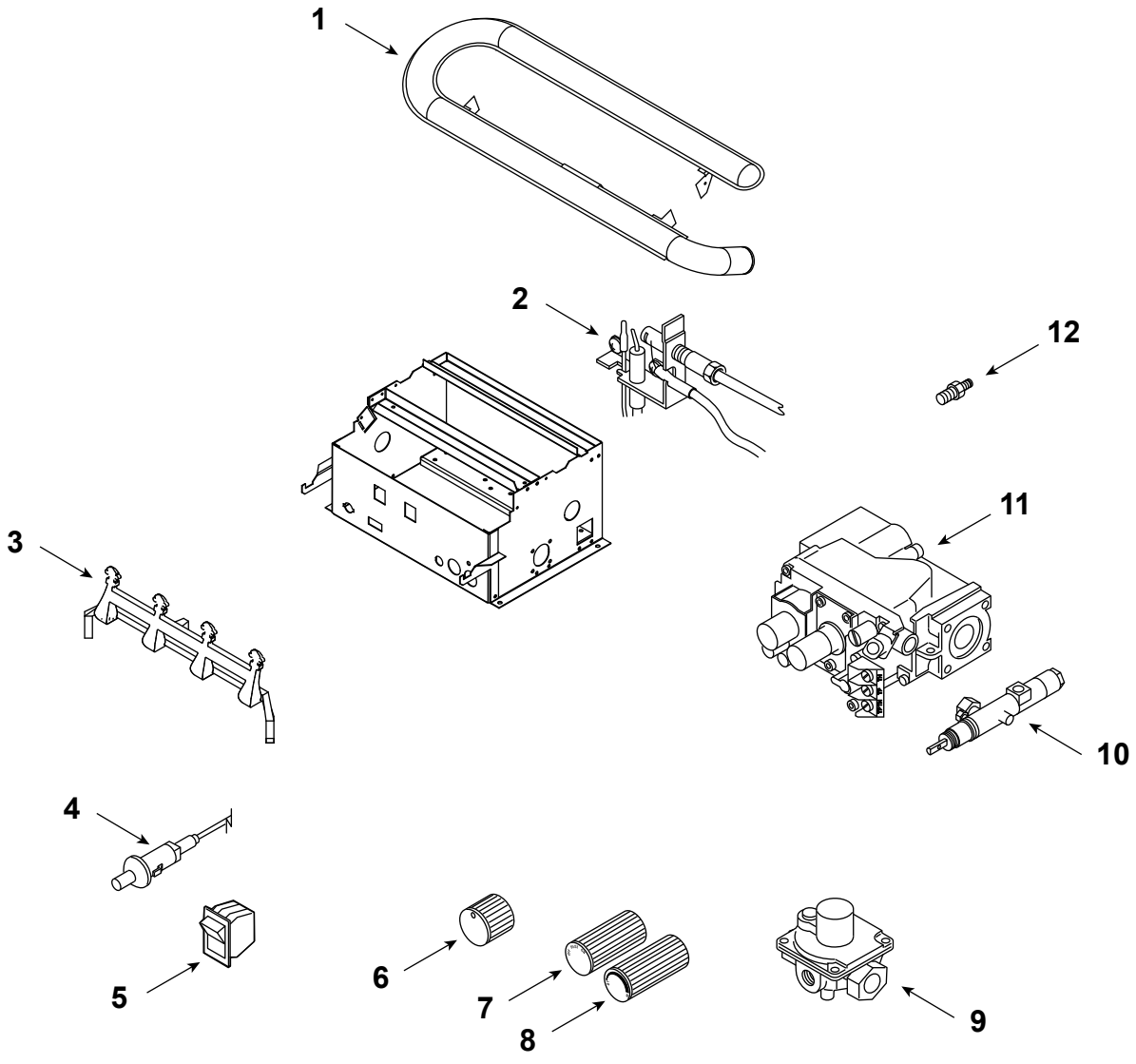

Part number list on following page.

MONESSEN **Service Parts**

PH18

Beginning Manufacturing Date: NA
Ending Manufacturing Date: Feb 2024

IMPORTANT: THIS IS DATED INFORMATION. Parts must be ordered from a dealer or distributor. **Hearth and Home Technologies does not sell directly to consumers**. Provide model number and serial number when requesting service parts from your dealer or distributor.

ITEM	DESCRIPTION	COMMENTS	PART NUMBER	Stocked at Depot
1	Burner	NG	SRV65D1053	
		Propane	SRV65D1054	
2	ODS Pilot Assembly (Manual Control)	NG	SRV26D2529	**Y**
		Propane	SRV14D0476	**Y**
	ODS Pilot Assembly (Millivolt Control)	NG	SRV14D0473	**Y**
		Propane	SRV14D0477	**Y**
	Pilot Tube		49D0050K	**Y**
3	Grate		65D2001K	
4	Piezo Ignitor		SRV14D0503	**Y**
	Piezo Wire		SRV00K0632	**Y**
5	On/Off Switch	Millivolt Control	SRV32D0232	**Y**
6	Knob Control	Manual Control	SRV18D0603	
7	Knob Extension, On/Off	Millivolt Control	SRV37D0010	
8	Knob Extension, Hi/Lo	Millivolt Control	SRV37D0011	
9	Regulator (Manual Control)	NG	SRV65D2039	**Y**
		Propane	SRV24D0306	**Y**
10	Control Valve (Manual Control)	NG	SRV30D0201	**Y**
		Propane	SRV30D0202	
11	Control Valve (Millivolt Control)	NG	SRV14D0467	**Y**
		Propane	SRV14D0468	**Y**
12	Injector, Manual Control	NG	SRV56D0613	
		Propane	SRV20H3144	
	Injector, Millivolt Control	NG	SRV58D0051	**Y**
		Propane	SRV20H3144	
	Regulator to Valve Tube	Manual Control	SRV65D1004	**Y**
	Valve to Burner Tube	**No longer available**	65D1005K	
		Millivolt Control	65D1007K	
	Pilot Regulator (Millivolt Control)	NG Only	SRV14D0469	**Y**

Beginning Manufacturing Date: NA
Ending Manufacturing Date: Feb 2024

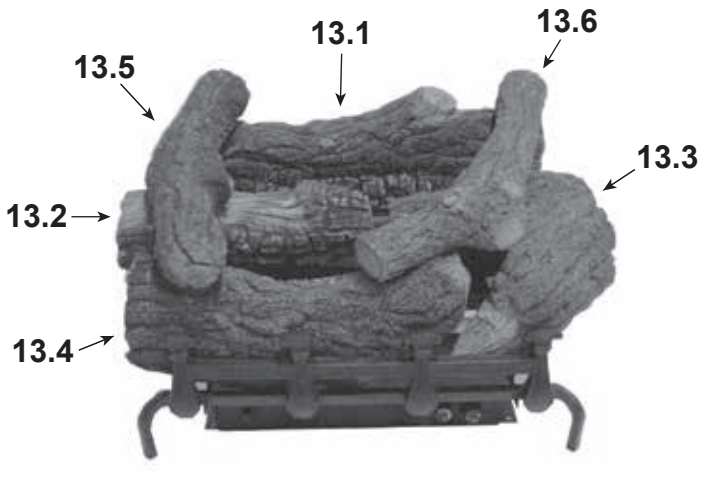

IMPORTANT: THIS IS DATED INFORMATION. Parts must be ordered from a dealer or distributor. **Hearth and Home Technologies does not sell directly to consumers**. Provide model number and serial number when requesting service parts from your dealer or distributor.

ITEM	DESCRIPTION	COMMENTS	PART NUMBER	Stocked at Depot
13	Log Assembly (Required to complete burner assembly, Sold seperately)	**No longer available**	PH18R	
13.1	Rear Log		20303849K	
13.2	Left Middle Log		20303850K	
13.3	Right Middle Log		20303851K	
13.4	Front Log		20303852K	
13.5	Left Top Log		20303853K	
13.6	Right Top Log		20303854K	