heatilator®
The first name in fireplaces

Service Parts

OUT42

Outdoor Woodburning Fireplace

Beginning Manufacturing Date: N/A
Ending Manufacturing Date: Sept 2003

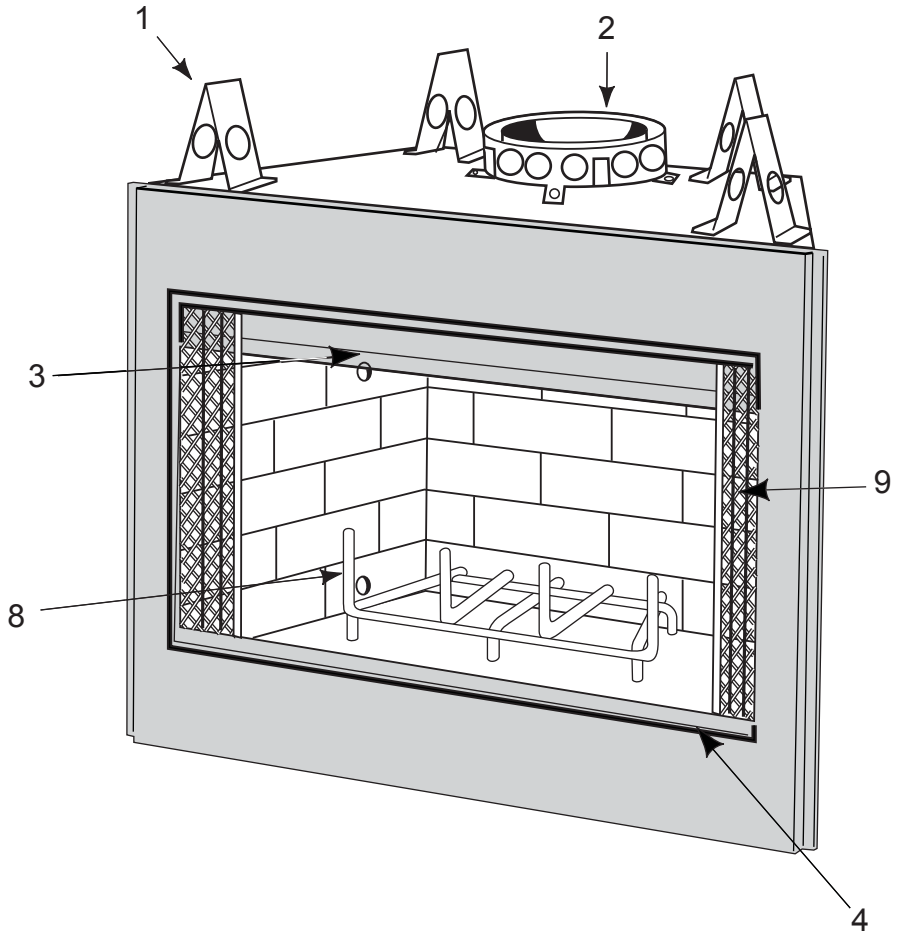

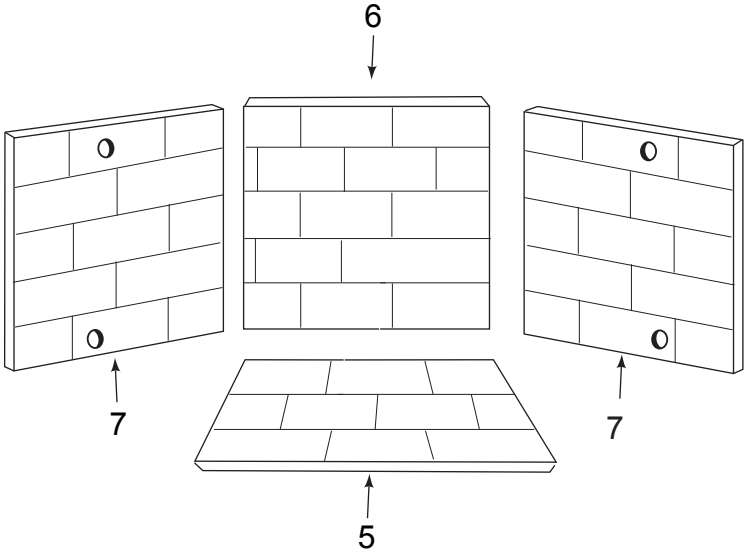

heatilator®
The first name in fireplaces

Service Parts

OUT42

Beginning Manufacturing Date: N/A
Ending Manufacturing Date: Sept 2003

IMPORTANT: THIS IS DATED INFORMATION. When requesting service or replacement parts for your appliance please provide model number and serial number. All parts listed in this manual may be ordered from an authorized dealer.

ITEM	DESCRIPTION	COMMENTS	PART NUMBER	Stocked at Depot
1	Top Standoff		SRV4044-111	
2	Starter Collar		30399	
3	Screen Rod		31375	
4	Nailing Flange		31190	
5	Hearth Refractory with Ashlip		28391	
6	Back Refractory		28394	
7	Side Refractory		28393	
8	Grate		GR21	
9	Screen Assembly		30371	
	Chrome-plated Screw with Gripper Head	Qty 6 req	SRV31076	
	Damper Blade Assembly	**No Longer Available**	30378	
	Door Clips	Qty 2 req	30407	
	Door Pivot Clip	Qty 2 req	SRV31527	
	Top Door Track		30400	
	4 in. Dual Cooling Air Kit		30416	
	Hearth Filler		30403	
	Installation Instructions		35034	
	Refractory Retainer	**No Longer Available**	11847C	
	Smoke Shield		30402	
	Strip Protector	Qty 2 req	SRV18320	