outdoor lifestyles
by hearth & home technologies®

Service Parts

ODLANAIGST-48

48” Lanai Outdoor
See Through Gas Fireplace

Beginning Manufacturing Date: April 2021
Ending Manufacturing Date: Active

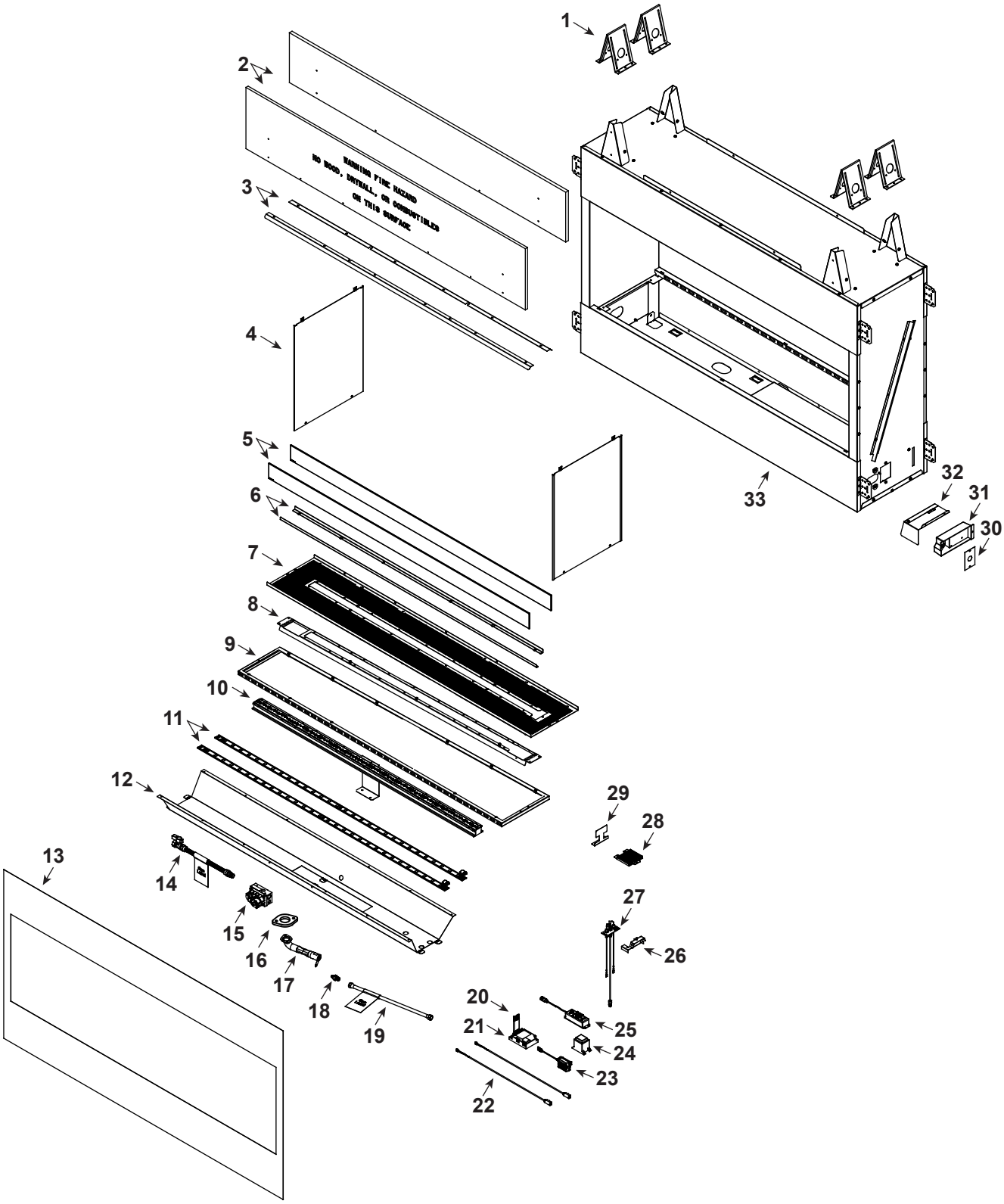

Part number list on following page.

outdoor lifestyles
by hearth & home technologies®

Service Parts

ODLANAIGST-48

Beginning Manufacturing Date: April 2021
Ending Manufacturing Date: Active

IMPORTANT: THIS IS DATED INFORMATION. Parts must be ordered from a dealer or distributor. **Hearth and Home Technologies does not sell directly to consumers**. Provide model number and serial number when requesting service parts from your dealer or distributor.

ITEM	DESCRIPTION	COMMENTS	PART NUMBER	Stocked at Depot
1	Top Standoff	Qty 4 req	SRV11864	
2	Non-combustible Board	Qty 2 req	SRV4111-325	
3	Hood	Qty 2 req	SRV4111-135	
4	Overlay Kit		SRV4113-025	
5	Deflection Glass	Qty 2 req	SRV4111-301	
6	Glass Bracket	Qty 2 req	SRV4111-153	
7	Screen Cover		SRV4113-109	
8	Burner Bottom Inner		SRV4111-111	
9	Burner Bottom Outer		SRV4111-110	
10	Burner Assembly		SRV4111-021	**Y**
11	LED Light Strip	Qty 2 req	SRV4099-321	**Y**
12	LED Mount		SRV4111-113	
13	Overlay Complete		SRV4111-173	
14	Flex Line w/Shutoff		SRV302-320	**Y**
15	Valve Assembly, NG		SRV593-500	**Y**
16	Venturi Gasket		SRV4099-191	**Y**
17	Venturi Assembly		SRV4099-036	**Y**
18	Orifice Flare #26 NG		SRV4018-347	**Y**
19	Flex Gas Line 16”		SRV4121-006	**Y**
20	Wire Assembly		SRV593-590	**Y**
21	IPI Control Module		SRV593-592	**Y**
22	Wire LED Adapter	Qty 2 req	SRV4018-114	**Y**
23	3V Transformer		SRV593-593	**Y**
24	LED Power Module		20308559K	**Y**
25	LED Control Module		SRV4121-160	**Y**
26	Pilot Bracket		SRV4111-150	
27	Pilot Assembly, NG		SRV4018-065	**Y**
28	Pilot Shield		SRV4111-151	
29	Jig, Media Placement		SRV4111-152	
30	Cover Plate		SRV4604-103	
31	Junction Box		SRV4021-013	**Y**
32	Junction Box Cover Assembly		SRV4111-032	
33	Lower Face		SRV4111-133	

Additional service part numbers appear on following page.

Service Parts

ODLANAIGST-48

Beginning Manufacturing Date: April 2021
Ending Manufacturing Date: Active

IMPORTANT: THIS IS DATED INFORMATION. Parts must be ordered from a dealer or distributor. **Hearth and Home Technologies does not sell directly to consumers**. Provide model number and serial number when requesting service parts from your dealer or distributor.

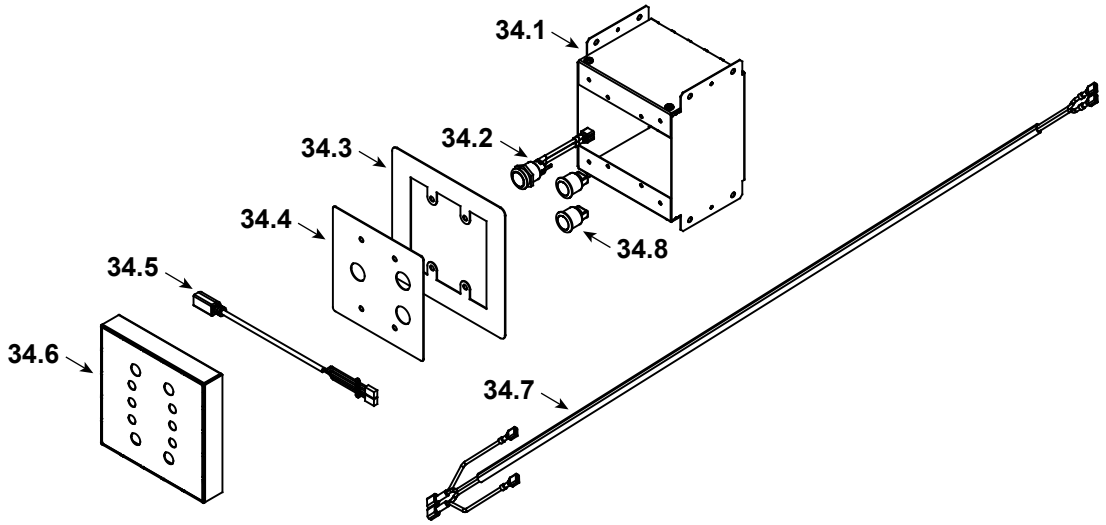

ITEM	DESCRIPTION	COMMENTS	PART NUMBER	Stocked at Depot
34	Remote Accessory Kit		SRV4111-033	
34.1	Switch Box Assembly		SRV4082-376	
34.2	Power Switch		SRV4121-136	**Y**
34.3	Trim Ring		SRV4018-336	
34.4	Switch Cover Plate		SRV4090-292	
34.5	Input Cable		20308587K	**Y**
34.6	Rock Template		SRV4608-250	
34.7	Wire Wall Switch Assembly		SRV4121-137	**Y**
34.8	LED Panel Switch	Qty 2 req	20308586K	**Y**
Conversion Kits				
	Conversion Kit Propane		LPK-ODLANAIG48	
	Orifice Flare		SRV4018-348	
	Pilot Orifice, Propane		SRV593-527	
	Regulator, Propane		SRVLPK-DXF	