Log Set Assembly

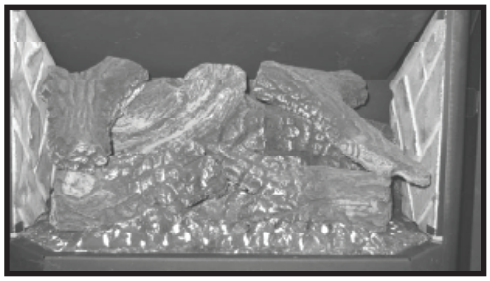

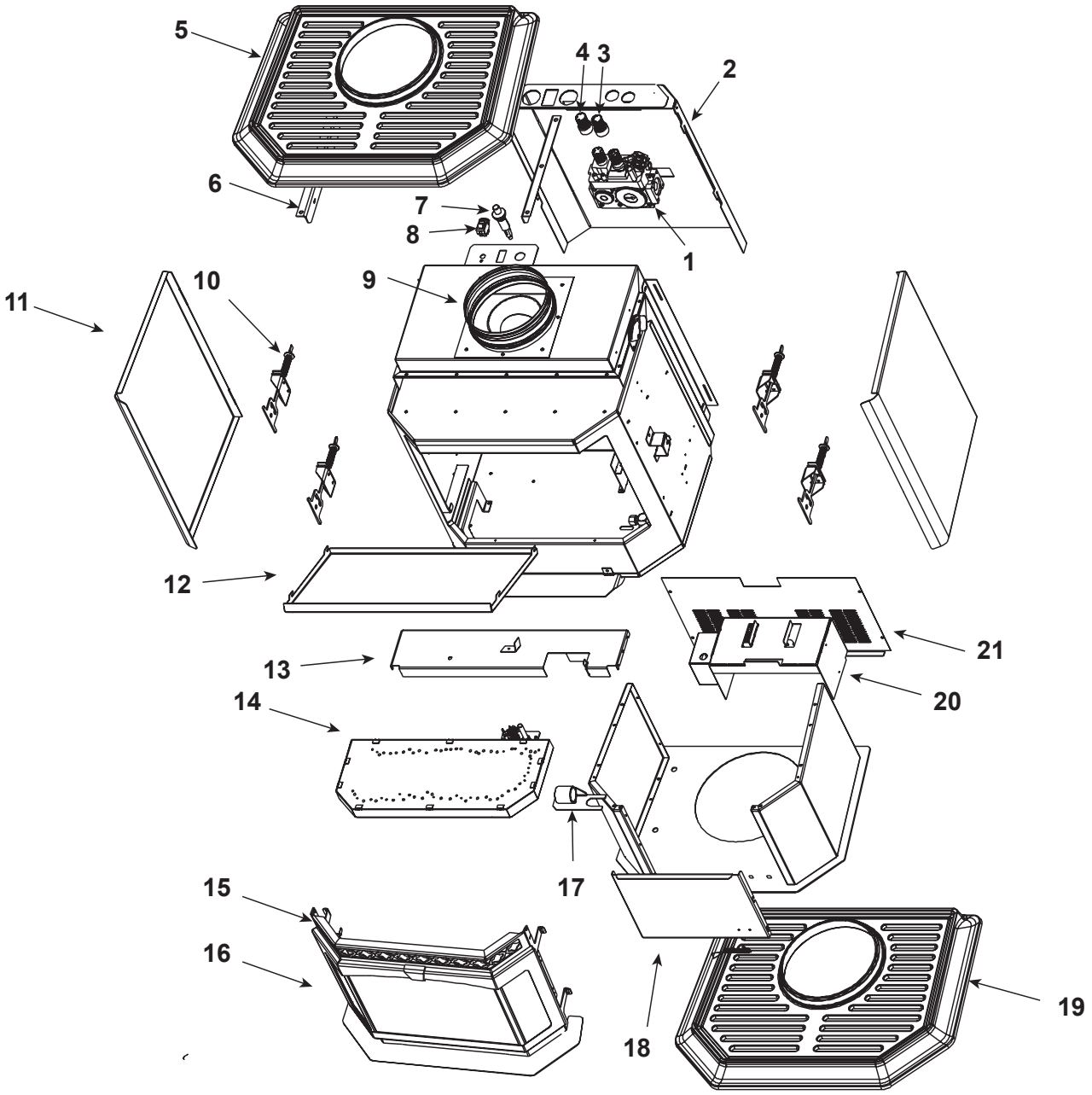

Part number list on following page.

HEAT & GLO™

No one builds a better fire

Service Parts

MISSION-BAY

Beginning Manufacturing Date: July 2002
Ending Manufacturing Date: Aug 2007

IMPORTANT: THIS IS DATED INFORMATION. Parts must be ordered from a dealer or distributor. **Hearth and Home Technologies does not sell directly to consumers**. Provide model number and serial number when requesting service parts from your dealer or distributor.

ITEM	DESCRIPTION	COMMENTS	PART NUMBER	Stocked at Depot
	Log/Brick Assembly	**No longer available**	479-5070	
1	Valve NG		842-0240	**Y**
	Valve LP		842-0230	**Y**
2	Valve Cover	**No longer available**	474-0240	
3	Extension Knob Hi/Lo		571-533	**Y**
4	Extension Knob On/ Off		SRV37D0010	**Y**
5	Top Cast		479-0170	
6	Top Support Brackets	**No longer available**	479-0120	
7	Piezo Ignitor		291-513	**Y**
8	On/Off, Switch		SRV320232	**Y**
9	Starting Collar	Inner 4 in	200-2470	
		Outer 6 5/8 in	SRV7010-172	
10	Latch Assembly	**No longer available**	452-5070	
11	Left or Right Curtain	**No longer available**	479-0150	
12	Baffle	**No longer available**	842-4051	
13	Burner Pan		474-0080	
14	Burner Assembly		BRNR-MB	**Y**
15	Grille, Black	Black	479-0030	
		No longer available	MB-GP-GRILLE	
16	Door Assembly	**No longer available**	DOOR-MB	
	Glass Assembly	**No longer available**	GLA-MB	
	Door Crown, Gold	**No longer available**	MB-GD	
17	Air Shutter Assembly		SRV468-5060	**Y**
18	Pedestal Door	**No longer available**	474-0190	
19	Bottom Cast	**No longer available**	479-0170	
20	Blower Bracket	**No longer available**	479-0130	
21	Blower Housing	**No longer available**	479-0090	
	Blower Assembly		GFK-160A	

Additional service part numbers appear on following page.

HEAT & GLO

No one builds a better fire

Service Parts

MISSION-BAY

Beginning Manufacturing Date: July 2002
Ending Manufacturing Date: Aug 2007

IMPORTANT: THIS IS DATED INFORMATION. Parts must be ordered from a dealer or distributor. **Hearth and Home Technologies does not sell directly to consumers**. Provide model number and serial number when requesting service parts from your dealer or distributor.

ITEM	DESCRIPTION	COMMENTS	PART NUMBER	Stocked at Depot
	Bulkhead		26457	Y
	Bulkhead Stop		SRV474-0090	
	Component Pack Includes waranty card, On/Off Valve, Mineral Wool, Touch-up Paint, and installation manual	**No longer available**	479-5120	
	Electrode		842-4580	Y
	Flex Line		7000-197	Y
	High Temp Limit Switch		107-531	Y
	Junction Box	**No longer available**	040-250A	
	Orifice LP (.063)		SRV17236	Y
	Orifice NG (.106)		19837	Y
	NG Pilot Assembly w/Propane Orifice		842-4940	Y
	Thermocouple		200-2950	Y
	Thermopile		842-0250	Y
	Remote		SMART-STAT-HHT	
	Rheostat Assembly		SRV100-510A	Y
	Rheostat Knob		SRV100-512	Y
	Wire Harness		7010-156	
	Conversion Kit NG		NGK-MB	Y
	Conversion Kit LP		LPK-MB	Y
	Pilot Orifice NG		842-4440	Y
	Pilot Orifice LP		SRV200-2630	Y
	Regulator NG		SRV230-1570	Y
	Regulator LP		SRV230-1520	Y