HEARTH & HOME technologies

Service Parts

E-STOVE

Electric Fireplace

Beginning Manufacturing Date: Sept. 2002
Ending Manufacturing Date: Nov. 2003

E-STOVE-MB, E-STOVE -AL, or E-STOVE-GR

For replacement parts, please contact Dimplex at 1-800-668-6663 (Customer Service) or 1-888-346-7539 (Tech support)

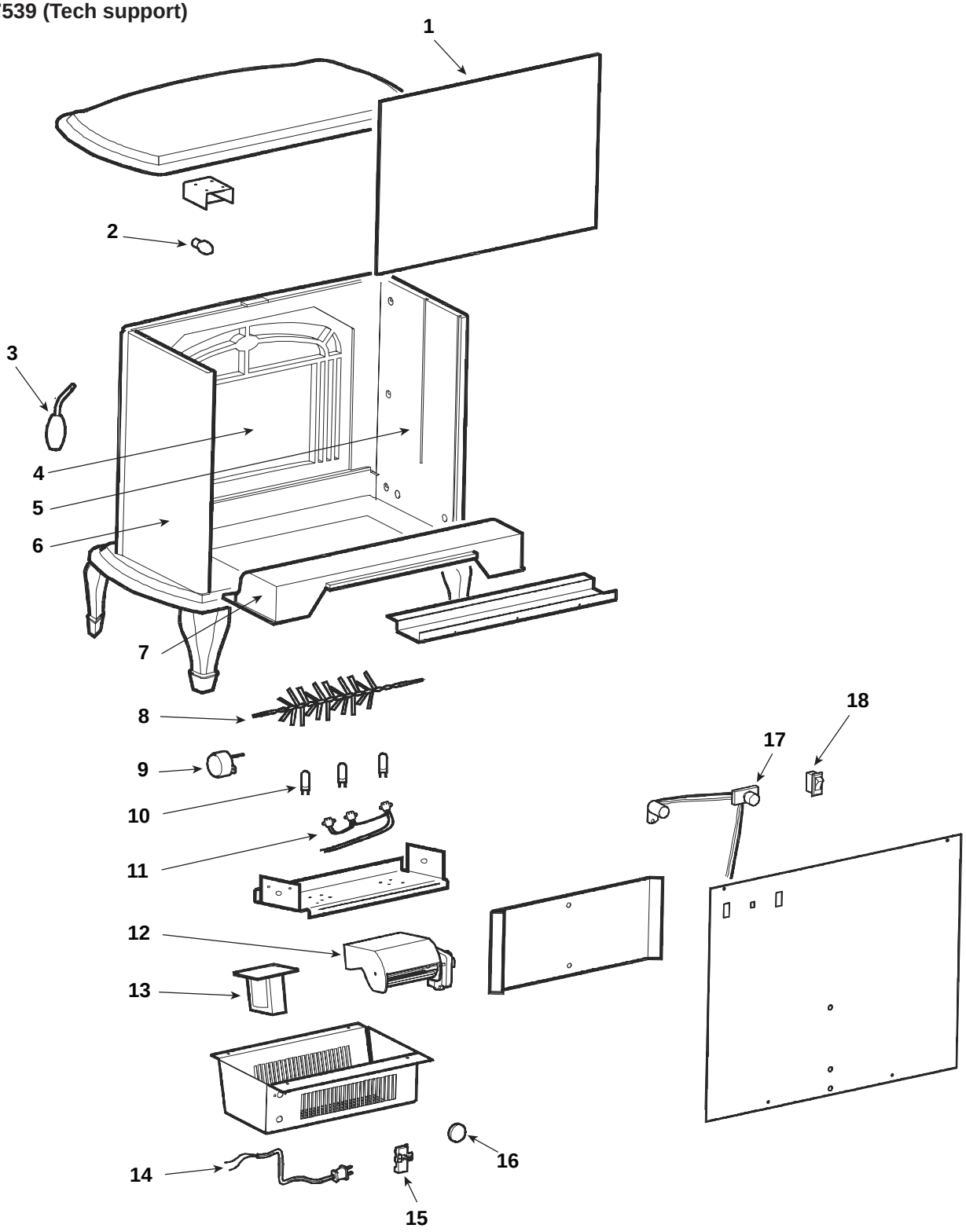

Part number list on following page.

HEARTH & HOME technologies

Service Parts

E-STOVE

Beginning Manufacturing Date: Sept. 2002
Ending Manufacturing Date: Nov. 2003

IMPORTANT: THIS IS DATED INFORMATION. When requesting service or replacement parts for your appliance please provide model number and serial number. All parts listed in this manual may be ordered from an authorized dealer.

ITEM	DESCRIPTION	COMMENTS	PART NUMBER
1	Mirror		6900100600RP
2	Upper Light Bulb**	**EIKO ITEM #**	MB11560
3	Handle		6900520100RP
4	Front Glass		5900110200RP
5	Left Side - Black Cast *(As viewed from front of stove)*		1103270159RP
	Left Side - Cream *(As viewed from front of stove)*		1103270181RP
	Left Side - Green *(As viewed from front of stove)*		1103270180RP
6	Right Side - Almond *(As viewed from front of stove)*		1103270281RP
	Right Side - Black *(As viewed from front of stove)*		1103270259RP
	Right Side - Green *(As viewed from front of stove)*		1103270280RP
7	Log Set Assembly		0438200200RP
8	Reflector Rod		5900080600RP
9	Reflector Motor		2000140300RP
10	Lower Light Blubs**	**SYLVANIA ITEM #**	SL58672
11	Lower Light Harness		2500110100RP
12	Heater, Blower Assembly		6902430100RP
13	Transformer		2100160100RP
14	Cord Set		4100040300RP
15	Thermostat		2300150100RP
16	Thermostat Knob		8800000300RP
17	Upper Light Harness		2500120100RP
18	Rocker Switch		2800070200RP

**** Replacement bulbs to be supplied by home owner. These light bulbs can be ordered by going the website www.lite-house.com or by calling 1-800-838-0977.**