HEAT&GLO

No one builds a better fire

Service Parts

CFL-18NG, CFL-18LP

Campfire 18" Gas Log Set

Beginning Manufacturing Date: Feb. 1997
Ending Manufacturing Date: July 1998

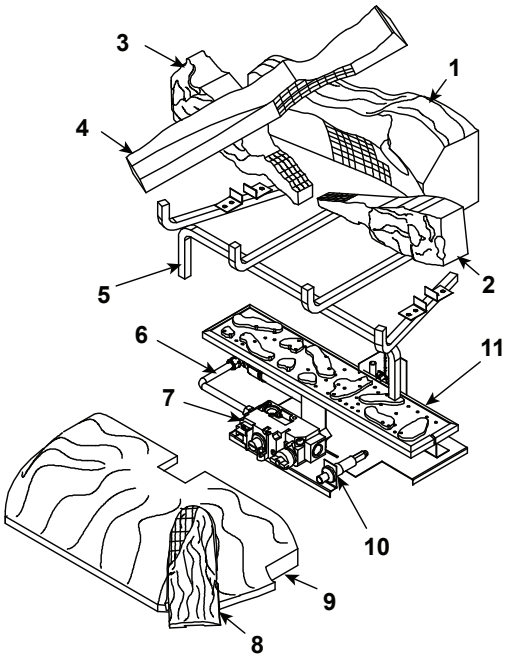

IMPORTANT: THIS IS DATED INFORMATION. Parts must be ordered from a dealer or distributor. **Hearth and Home Technologies does not sell directly to consumers.** Provide model number and serial number when requesting service parts from your dealer or distributor.

ITEM	DESCRIPTION	COMMENTS	PART NUMBER	Stocked at Depot
1	Log 1		SRV530-711	
2	Log 2		SRV446-702	
3	Log 3		SRV446-703	
4	Log 4		SRV446-704	
5	Grate Assembly	**No longer available**	SRV481-360A	
6	Burner Tube		477-301A	**Y**
7	Valve NG		060-500	**Y**
	Valve LP		060-501	**Y**
8	Log 5	**No longer available**	SRV481-710	
9	Refractory	**No longer available**	SRV481-730	
10	Piezo Ignitor		291-513	**Y**
11	Burner NG	**No longer available**	481-326A	
	Burner LP	**No longer available**	481-325A	
	Pilot Assembly NG		446-512A	**Y**
	Pilot Assembly LP		446-513A	**Y**
	Thermopile		2103-512	**Y**
	Pilot Tube		SRV446-301	**Y**
	Flex Ball Valve Assembly		SRV302-320	**Y**
	ON/OFF, Switch		SRV32D0232	**Y**
	Orifice LP (#44A)	**No longer available**	041-800	
	Orifice NG (#54A)	**No longer available**	409-801	
	Single Wire Assembly 24 in.		049-555A	**Y**