HEAT&GLO™

No one builds a better fire

Service Parts

CF750ENH

Crestfire 36" Electric Fireplace-
120V - No Heater

Beginning Manufacturing Date: Nov 2003
Ending Manufacturing Date: July 2005

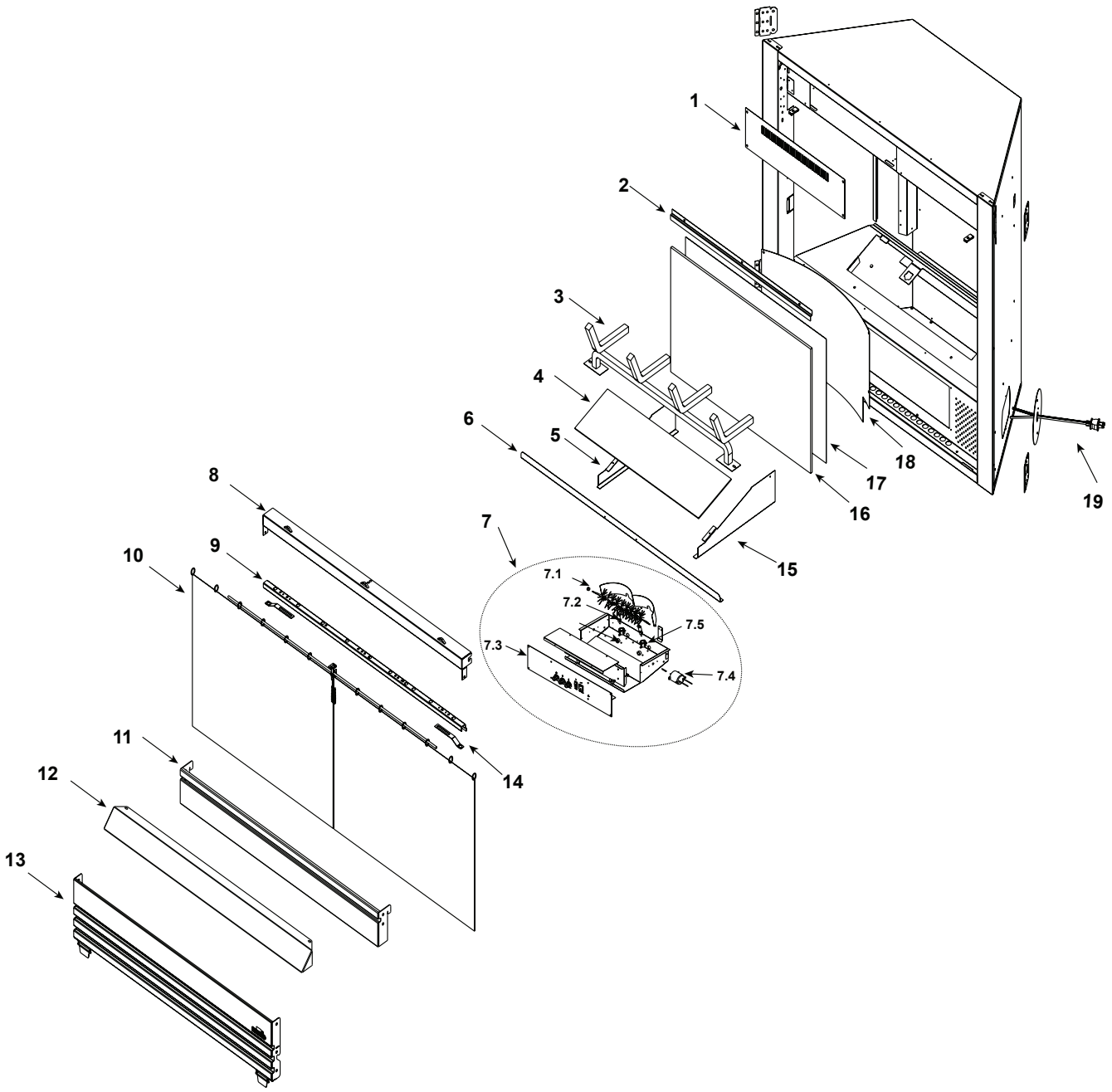

Part number list on following page.

HEAT & GLO

No one builds a better fire

Service Parts

CF750ENH

Beginning Manufacturing Date: Nov 2003
Ending Manufacturing Date: July 2005

IMPORTANT: THIS IS DATED INFORMATION. When requesting service or replacement parts for your appliance please provide model number and serial number. All parts listed in this manual may be ordered from an authorized dealer.

ITEM	DESCRIPTION	COMMENTS	PART NUMBER	Stocked at Depot
	Electric Log Assembly	**No longer available**	4030-055	
1	Heater Face Cover	**No longer available**	4030-100	
2	Upper Glass Retainer	**No longer available**	4030-146	
3	Grate	**No longer available**	4030-027	
4	Ember Bed Glass Panel	**No longer available**	4030-803	
5	Flame Tray Support LH	**No longer available**	4030-165	
6	Rock Retainer	**No longer available**	4030-157	
7	Light Tray Assembly	**No longer available**	SRV-020	
7.1	Flame Element Replacement Kit	**No longer available**	4030-200	
7.2	Halogen Light	**No longer available**	33961	
7.3	Dashboard Assembly	**No longer available**	4030-020	
7.4	Motor w/Vinyl Cover Assembly	**No longer available**	4030-883	
7.5	Light Receptacle	**No longer available**	33962	
8	Upper Face Panel	**No longer available**	4030-144	
9	Door Track		SRV15425	
10	Screen & Rod Assembly	**No longer available**	4030-033	
11	Top Grille Assembly	**No longer available**	4030-030	
12	Hood		SRV60-143-BK	
13	Black Louver Assembly		SRV530-237A-BK	
14	Door Pivot Clip		SRV31527	
15	Flame Tray Support RH	**No longer available**	4030-166	
16	Back Glass Panel	**No longer available**	4030-899	
17	Lenticular Lens	**No longer available**	4030-808	
18	Reflective Panel	**No longer available**	4030-162	
		No longer available	4021-190	
19	Power Cord	**No longer available**	4030-802	
	Painted Teco-Sil rock	**No longer available**	4030-811	
	Lava Rock		SRV4021-296	
	Installation Manual		4030-239	