Log Set Assembly

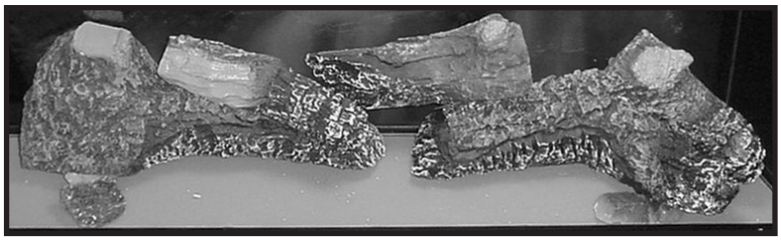

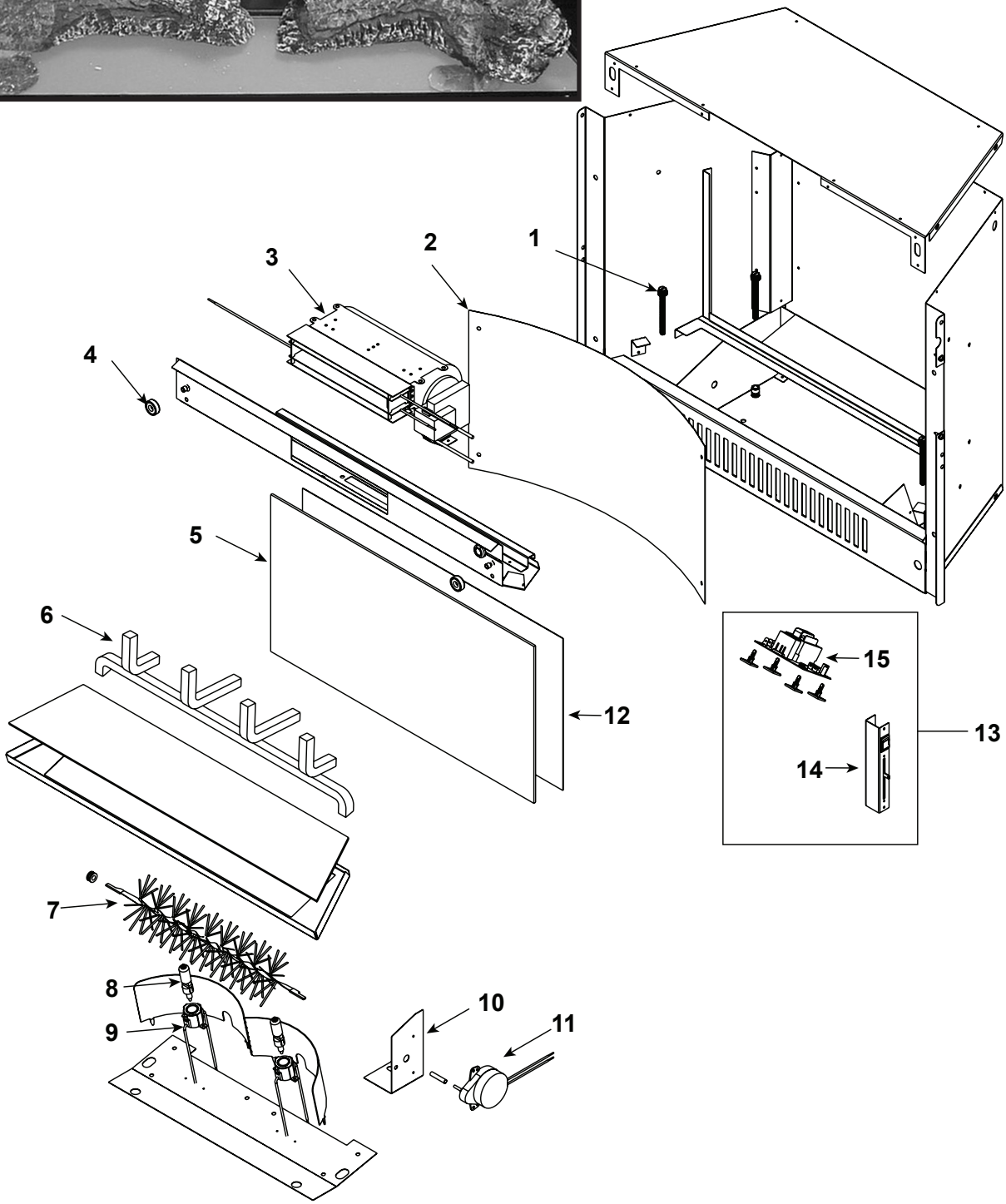

Part number list on following page.

HEAT&GLO™

No one builds a better fire

Service Parts

CF260E

Beginning Manufacturing Date: Apr 2004
Ending Manufacturing Date: Aug 2005

IMPORTANT: THIS IS DATED INFORMATION. Parts must be ordered from a dealer or distributor. **Hearth and Home Technologies does not sell directly to consumers**. Provide model number and serial number when requesting service parts from your dealer or distributor.

ITEM	DESCRIPTION	COMMENTS	PART NUMBER	Stocked at Depot
	Hearth Assembly (includes log assembly and grate)	**No longer available**	4038-040	
	23/26 Log Assembly	**No longer available**	4038-004	
	Log, Bottom Left	**No longer available**	4038-030	
	Log, Top Left	**No longer available**	4038-031	
	Log, Center	**No longer available**	4038-032	
	Log, Bottom Right	**No longer available**	4038-033	
	Log, Top Right	**No longer available**	4038-034	
1	Leveling Bolts	**No longer available**	4038-823	
2	Reflective Flame Panel	**No longer available**	4030-162	
	Reflective Flame Decal	**No longer available**	4021-190	
3	Heater/Blower Assembly	**No longer available**	SRV4038-107	
4	Top Magnet Assembly	**No longer available**	4038-109	
5	Acrylic Panel	**No longer available**	4038-810	
6	Grate	**No longer available**	4038-883	
7	Flame Element Kit	**No longer available**	4030-200	
8	Halogen Light	**No longer available**	33961	
9	Light Receptacle	**No longer available**	33962	
10	Motor Bracket	**No longer available**	4038-009	
11	Motor	**No longer available**	4035-860	
12	Lenticular Lens	**No longer available**	4030-840	
13	Control Board Assembly	**No longer available**	4038-108	
14	Switch Assembly	**No longer available**	4038-110	
15	Thermostat Control Assembly	**No longer available**	4038-806	
	Control Switch Wire Assembly	**No longer available**	4038-814	
	Gasket	**No longer available**	4038-900	
	Glass Retainer, Top	**No longer available**	4038-012	
	Power Cord	**No longer available**	4030-802	
	Slide Pot Rubber Boot	**No longer available**	4038-811	
	Strain Relief Bushing (Power Cord)	**No longer available**	4030-873	
	Strain Relief Bushing (Switch Wires)	**No longer available**	25756	
	Installation Manual		4038-825	