heatilator®
The first name in fireplaces

Service Parts

BIR36-C

36" Woodburning Fireplace

Beginning Manufacturing Date: Mar 2026
Ending Manufacturing Date: Active

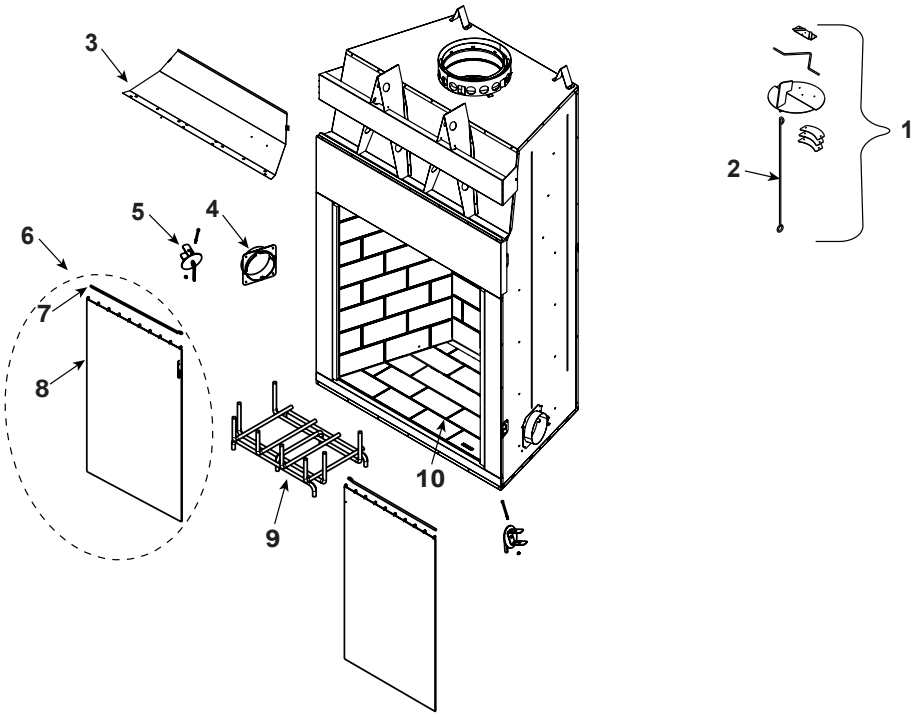

IMPORTANT: THIS IS DATED INFORMATION. Parts must be ordered from a dealer or distributor. **Hearth and Home Technologies does not sell directly to consumers.** Provide model number and serial number when requesting service parts from your dealer or distributor.

ITEM	DESCRIPTION	COMMENTS	PART NUMBER	Stocked at Depot
1	Damper Blade Assembly		SRV35160	
2	Damper Control		SRV35159	
3	Smoke Shield		SRV4059-417	
4	Outside Air Collar Assembly	Qty 2 req	SRV4059-037	
5	OA Door	Qty 2 req	SRV4059-049	
6	Firescreen Assembly W/Rod	Qty 2 req	4059-053	**Y**
7	Screen Rod	Qty 2 req	SRV4059-512	**Y**
	Screen Rod Clips (Includes qty of 2)		SRV4059-111	**Y**
8	Firescreen Assembly		4059-054	
9	Grate Assembly		GR37	**Y**
	Grate Retainer (Includes qty of 2)		SRV4017-060	
10	Hearth Refractory	Natural Gray	SRV4059-380	
		Antler Velvet	SRV4059-380AV	
		Black Onyx	SRV4059-380BK	
		Masonry Brown	SRV4059-380BR	
	Outside Air Hood	Qty 2 req	SRV4059-271	
	Protector Strip	Qty 2 req	SRV18320	
	Starter Collar		SRV22072	
	Owners Manual		4059-955	
	Installation Manual		4059-954	

Additional service parts on following page.

heatilator® The first name in fireplaces

Service Parts

BIR36-C

Beginning Manufacturing Date: Mar 2026
Ending Manufacturing Date: Active

Traditional Refractory

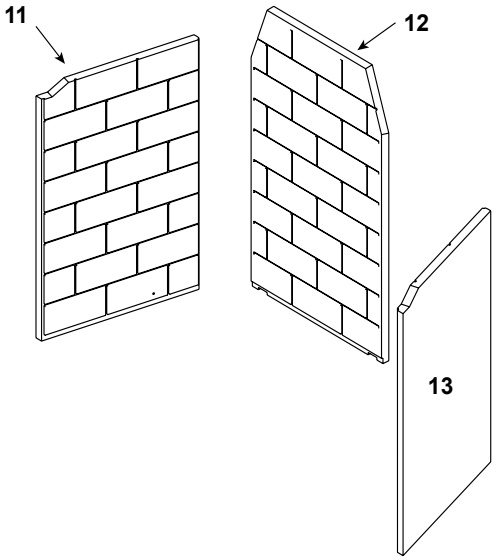

IMPORTANT: THIS IS DATED INFORMATION. Parts must be ordered from a dealer or distributor. **Hearth and Home Technologies does not sell directly to consumers.** Provide model number and serial number when requesting service parts from your dealer or distributor.

ITEM	DESCRIPTION	COMMENTS	PART NUMBER	Stocked at Depot
	Traditional Refractory Set	Natural Gray	WDR3836-T-NG	
		Antler Velvet	WDR3836-T-AV	
		Black Onyx	WDR3836-T-BK	
		Masonry Brown	WDR3836-T-BR	
	Refractory Touch-Up Paint	Antler Velvet	TUP-AV	
		Black Onyx	TUP-BK	
		Masonry Brown	TUP-BR	
11	Left Panel	Natural Gray	SRV4059-852	
		Antler Velvet	SRV4059-852AV	
		Black Onyx	SRV4059-852BK	
		Masonry Brown	SRV4059-852BR	
12	Back Panel	Natural Gray	SRV4059-859	
		Antler Velvet	SRV4059-859AV	
		Black Onyx	SRV4059-859BK	
		Masonry Brown	SRV4059-859BR	
13	Right Panel	Natural Gray	SRV4059-853	
		Antler Velvet	SRV4059-853AV	
		Black Onyx	SRV4059-853BK	
		Masonry Brown	SRV4059-853BR	
	Refractory Fastener Pack Contains: 8 #6 X 1 1/2” Panhead screw, 3/32” Drill Bit, 8 Clips		SRV4059-668	

Additional service parts on following page.

heatilator® Service Parts

The first name in fireplaces

BIR36-C

Beginning Manufacturing Date: Mar 2026
Ending Manufacturing Date: Active

Herringbone Refractory

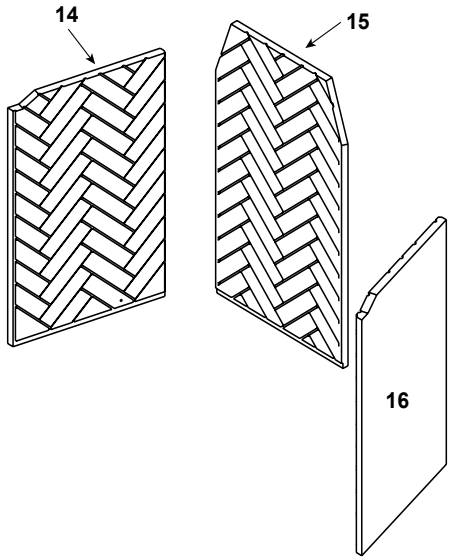

IMPORTANT: THIS IS DATED INFORMATION. Parts must be ordered from a dealer or distributor. **Hearth and Home Technologies does not sell directly to consumers.** Provide model number and serial number when requesting service parts from your dealer or distributor.

ITEM	DESCRIPTION	COMMENTS	PART NUMBER	Stocked at Depot
	Herringbone Refractory Set	Natural Gray	WDR3836-H-NG	
		Antler Velvet	WDR3836-H-AV	
		Black Onyx	WDR3836-H-BK	
		Masonry Brown	WDR3836-H-BR	
	Refractory Touch-Up Paint	Antler Velvet	TUP-AV	
		Black Onyx	TUP-BK	
		Masonry Brown	TUP-BR	
14	Left Panel	Natural Gray	SRV4059-856	
		Antler Velvet	SRV4059-856AV	
		Black Onyx	SRV4059-856BK	
		Masonry Brown	SRV4059-856BR	
15	Back Panel	Natural Gray	SRV4059-861	
		Antler Velvet	SRV4059-861AV	
		Black Onyx	SRV4059-861BK	
		Masonry Brown	SRV4059-861BR	
16	Right Panel	Natural Gray	SRV4059-857	
		Antler Velvet	SRV4059-857AV	
		Black Onyx	SRV4059-857BK	
		Masonry Brown	SRV4059-857BR	
	Refractory Fastener Pack Contains: 8 #6 X 1 1/2” Panhead screw, 3/32” Drill Bit, 8 Clips		SRV4059-668	