Owner's Manual

Care and Operation

INSTALLER: Leave this manual with party responsible for use and operation.
OWNER: Retain this manual for future reference.
Contact your local dealer with questions on installation, operation or service.

NOTICE: SAVE THESE INSTRUCTIONS

HARMAN®

BUILT TO A STANDARD, NOT A PRICE

Model(s):

Absolute63 Freestanding Pellet Stove

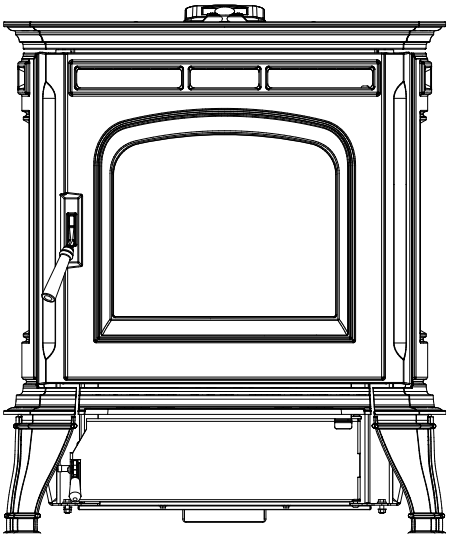

Pellet Fuels Institute

NATIONAL FIREPLACE INSTITUTE® A CERTIFICATION AGENCY

CAUTION

Check building codes prior to installation.

- Installation MUST comply with local, regional, state and national codes and regulations.
- Contact local building or fire officials about restrictions and installation inspection requirements in your area.

CAUTION

Tested and approved for wood pellet fuel only. Burning of any other type of fuel voids your warranty.

WARNING

Please read this entire manual before installation and use of this pellet fuel-burning room heater.
Failure to follow these instructions could result in property damage, bodily injury or even death.

- Do not store or use gasoline or other flammable vapors and liquids in the vicinity of this or any other appliance.
- Do not overfire - If any external part starts to glow, you are overfiring. Reduce feed rate. Overfiring will void your warranty.
- Comply with all minimum clearances to combustibles as specified. Failure to comply may cause house fire.

WARNING

HOT SURFACES!

Glass and other surfaces are hot during operation AND cool down.

Hot glass will cause burns.

- Do not touch glass until it is cooled.
- NEVER allow children to touch glass.
- Keep children away.
- CAREFULLY SUPERVISE children in same room as stove.
- Alert children and adults to hazards of high temperatures. **High temperatures may ignite clothing or other flammable materials.**
- Keep clothing, furniture, draperies and other flammable materials away.

NOTE

To obtain a French translation of this manual, please contact your dealer or visit www.harmanstoves.com.

Pour obtenir une traduction française de ce manuel, s'il vous plaît contacter votre revendeur ou visitez www.harmanstoves.com

Read this manual before operating this appliance.
Please retain this Owner's Manual for future reference.
Read the Installation Manual before making any installation or finishing changes.

Congratulations, The Harman® Absolute63 pellet stove you have selected is designed to provide the utmost in safety, reliability, and efficiency.

As the owner of a new pellet stove, you'll want to read and carefully follow all of the instructions contained in this owner's manual. Pay special attention to all cautions and warnings.

This owner's manual should be retained for future reference. We suggest that you keep it with your other important documents and product manuals.

Your new Harman® Absolute63 Freestanding Pellet Stove will give you years of durable use and trouble-free enjoyment. Welcome to the Harman® family!

Note: Cast iron is an artisan crafted material, which is made the same way today as nearly 2000 years ago. Due to the intrinsic primitive nature of the casting process, part to part variation is normal and adds to the character of a hand built cast iron appliance

Listing Label Information/Location

The model information regarding your specific stove can be found on the rating plate usually located in the control area of the stove.

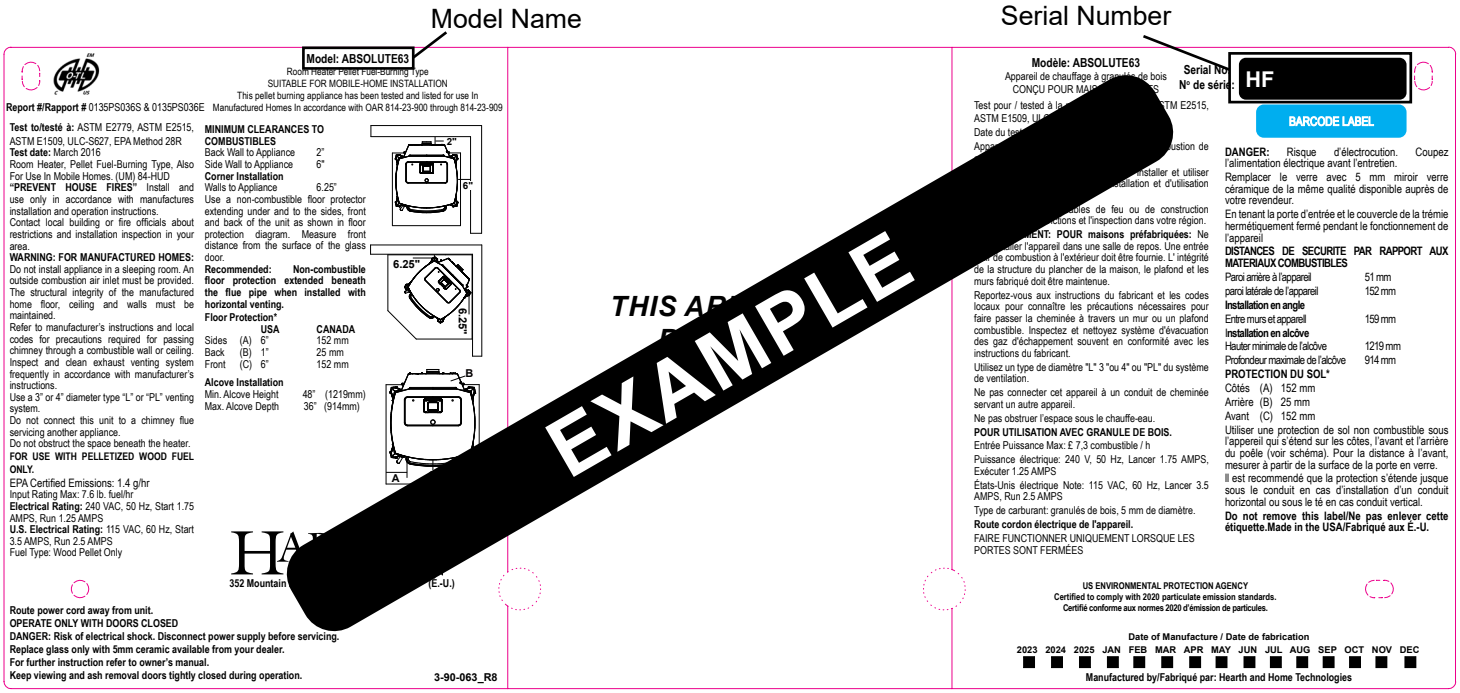

Safety Alert Key:

- ***DANGER!*** *Indicates a hazardous situation which, if not avoided* ***will*** *result in death or serious injury.*
- ***WARNING!*** *Indicates a hazardous situation which, if not avoided* ***could*** *result in death or serious injury.*
- ***CAUTION!*** *Indicates a hazardous situation which, if not avoided, could result in minor or moderate injury.*
- ***NOTICE:*** *Used to address practices not related to personal injury.*

Table of Contents

1 Product Specifications and Important Safety Information

A. Appliance Certification / Specifications 4
B. Mobile Home Approval 4
C. BTU & Efficiency Specifications 4
D. Appliance Safety 5
E. Clear Space 5
F. California Safety Information 5
G. Helpful Hints 6
H. Fuel Specifications 6
I. Quick Start Guide 8
J. Frequently Asked Questions 9
K. Cleaning Prompts, Messages and Errors. 10

2 Maintenance and Service

A. Proper Shutdown Procedure 11
B. Quick Reference Maintenance Chart 12
C. Unit Maintenance 13
- Daily/Weekly Maintenance 13
- Monthly Maintenance 13
- Yearly Maintenance 14

3 Reference Materials

➔ A. Service Parts 16
B. Limited Lifetime Warranty. 21
C. Loss of Power Addendum 23
D. Emergency Manual Ignition 23
E. Troubleshooting 25
F. Contact Information 26

➔ = Contains updated information

1 Product Specific and Important Safety Information

A. Appliance Certification / Specifications

MODEL:	Absolute63 Pellet Stove
LABORATORY:	OMNI Test Laboratories, Inc
REPORT NO.	0135PS036S & 0135PS036E
TYPE:	Pellet Fueled/Supplementary For Residential Use
STANDARD(s):	ASTM E 2779-10, ASTEM E 2515-11, ASTM E 1509-12, ULC-S627-00, EPA Method 28R
ELECTRICAL RATING:	115 VAC, 60 Hz, Start 3.5 AMPS, Run 2.5 AMPS
GLASS SPECIFICATION:	5mm mirrored ceramic glass

The Absolute63 is Certified to comply with 2020 particulate emission standards.

NOTE: This installation must conform with local codes. In the absence of local codes you must comply with the **ASTM E 1509-12, ULC-S627-00, (UM) 84-HUD**

B. Mobile Home Approval

This appliance is approved for mobile and manufactured home installations when not installed in a sleeping room and when an outside combustion air inlet is provided.

The structural integrity of the mobile home floor, ceiling, and walls must be maintained. The appliance must be properly grounded to the frame of the mobile home and use only listed pellet vent, Class “PL” or “L” connector pipe.

A Harman® Outside Air Kit must be installed in a mobile home installation.

WARNING

THE STRUCTURAL INTEGRITY OF THE MANUFACTURED HOME FLOOR, WALL, AND CEILING/ROOF MUST BE MAINTAINED.

DO NOT INSTALL IN SLEEPING ROOM.

NOTE: Hearth & Home Technologies, manufacturer of this appliance, reserves the right to alter its products, their specifications and/or price without notice.

Harman® is a registered trademark of Hearth & Home Technologies.

C. BTU & Efficiency Specifications

EPA Certification Number:	54-16
EPA Certified Emissions:	1.4 g/hr
***LHV Tested Efficiency:**	83.2%
****HHV Tested Efficiency:**	77.7%
*****EPA BTU Output:**	10,200 - 46,400
******BTU Input**	14,100 - 61,800
Vent Size:	3 Inch
Hopper Capacity:	72 lbs
Fuel:	Wood Pellets

* Weighted average LHV efficiency using data collected during EPA emissions test.

**Weighted average HHV efficiency using data collected during EPA emissions test.

***A range of BTU outputs based on EPA Default Efficiency and the burn rates from the low and high EPA tests.

****Based on the maximum feed rate per hour multiplied by approximately 8600 BTU’s which is the average BTU’s from a pound of pellets.

This wood heater has a manufacturer-set minimum low burn rate that must not be altered. It is against federal regulations to alter this setting or otherwise operate this wood heater in a manner inconsistent with operating instructions in this manual.

This wood heater needs periodic inspection and repair for proper operation. It is against federal regulations to operate this wood heater in a manner inconsistent with operating instructions in this manual.

Risk of Fire! *Hearth & Home Technologies disclaims any responsibility for, and the warranty and agency listing will be voided by the below actions.*

DO NOT:

- *Install or operate damaged appliance.*
- *Modify appliance.*
- *Install other than as instructed by Hearth & Home Technologies.*
- *Operate the appliance without fully assembling all components.*
- *Overfire.*
- *Install any component not approved by Hearth & Home Technologies.*
- *Install parts or components not Listed or approved.*
- *Disable safety switches.*

Improper installation, adjustment, alteration, service or maintenance can cause injury or property damage.

For assistance or additional information, consult a qualified installer, service agency or your dealer.

D. Appliance Safety

WARNING

If you expect that small children or vulnerable adults may come into contact with this appliance, the following precautions are recommended:

- Install a physical barrier such as:
  - A decorative fire screen.
  - Adjustable safety gate.
- Never leave children alone near a hot stove, whether operating or cooling down.
- Teach children to ***NEVER*** touch the stove.
- Consider not using the stove when children will be present.
- Use only specified components as replacement parts. Other components may not allow your stove to operate as it was intended.

Contact your dealer for more information, or visit: www.hpba.org/safety-information.

To prevent unintended operation when not using your stove for an extended period of time (summer months, vacations, trips, etc):

- Unplug stove from receptacle.

Due to high temperatures, this stove should be placed away from traffic, furniture and draperies.

Children and adults should be alerted to the hazards of high surface temperatures and should stay away to avoid burns to the skin and/or clothing.

Young children should be carefully supervised when they are in the same room as the stove.

Clothing and other flammable materials should not be placed on or near this stove.

Installation and repair of this stove should be done by a qualified service person. The appliance should be inspected before use and at least annually by a qualified service person. More frequent cleaning will be required. It is imperative that control compartments and circulating air passageways of this stove be kept clean.

Connect the power cord into a 120 VAC, 60 Hz grounded receptacle. (A surge protector is recommended to protect the circuit board.) Be sure the polarity of the outlet the stove is plugged into is correct.

WARNING

THIS WOOD HEATER HAS A MANUFACTURER-SET MINIMUM LOW BURN RATE THAT MUST NOT BE ALTERED. IT IS AGAINST FEDERAL REGULATIONS TO ALTER THIS SETTING OR OTHERWISE OPERATE THIS WOOD HEATER IN A MANNER INCONSISTENT WITH OPERATING INSTRUCTIONS IN THIS MANUAL.

E. Clear Space

WARNING

RISK OF FIRE! Do NOT place combustible objects in front or to the sides of the appliance. *High temperatures may ignite clothing, furniture or draperies.*

NOTICE: *Clearances may only be reduced by means approved by the regulatory authority having jurisdiction.*

WARNING

RISK OF FIRE! *Keep combustible materials, gasoline and other flammable vapors and liquids clear of appliance.*

- *Do **NOT** store flammable materials in the appliance's vicinity.*
- *Do **NOT** use gasoline, lantern fuel, kerosene, charcoal lighter fluid or similar liquids to start or "freshen up" a fire in this heater.*

Keep all such liquids well away from the heater while it is in use as combustible materials may ignite.

WARNING

MOBILE/MANUFACTURED HOME GUIDELINES: DO NOT ALLOW INSTALLATION IN A SLEEPING ROOM.

WARNING

USE OF IMPROPER FUELS, FIRESTARTERS OR ALTERING THE STOVE FOR HIGHER HEAT OUTPUT MAY CAUSE DAMAGE TO THE STOVE AND COULD RESULT IN A HOUSE FIRE. USE ONLY APPROVED FUELS AND OPERATION GUIDELINES.

F. California

WARNING

This product and the fuels used to operate this product (wood), and the products of combustion of such fuels, can expose you to chemicals including lead and carbon black, which is known to the State of California to cause cancer, and carbon monoxide, which is know to the State of California to cause birth defects or other reproductive harm. For more information go to: www.P65Warnings.ca.gov

G. Helpful Hints

When operating your Harman® Absolute63 Pellet Stove, follow basic safety standards. Read these instructions carefully before you attempt to operate the Absolute63 Pellet Stove. Failure to do so may result in damage to property or personal injury and may void the product warranty.

Cleaning Burn Pot: Whenever your stove is not burning, take the opportunity to scrape the burn pot to remove carbon buildup. A vacuum cleaner is handy to remove the residue. Be sure the stove is cold if you use a vacuum.

Carbon buildup can be scraped loose with the fire burning using the special tool provided with your stove. Scrape the floor and sides of the burn pot. The carbon will be pushed out by the incoming fuel. Always wear gloves when scraping the burnpot.

Disposal of Ashes: Ashes should be placed in a steel container with a tight fitting lid. The closed container of ashes should be placed on a non-combustible floor or on the ground, well away from all combustible materials, pending final disposal. If the ashes are disposed of by burial in soil or otherwise locally dispersed, they should be retained in the closed container until all cinders have thoroughly cooled. Other waste shall not be placed in this container.

Soot and Flyash Formation and Need for Removal: The products of combustion will contain small particles of flyash. The flyash will collect in the exhaust venting system and restrict the flow of the flue gases. Incomplete combustion, such as occurs during startup, shutdown, or incorrect operation of the room heater will lead to some soot formation which will collect in the exhaust venting system. The exhaust venting system should be inspected at least once every year to determine if cleaning is necessary.

When burning wood pellets on low, the potential exists for creosote to form. The venting system should be inspected periodically throughout the heating season to determine if creosote buildup has occurred. If a significant layer of creosote has accumulated (1/8" or more), it should be removed to reduce the risk of a chimney fire. If a fire occurs, call the fire department, shut down the stove, and evacuate the residence. Before using the appliance, have the venting system thoroughly inspected and replace any damaged components.

With any hearth appliance, installation of smoke detectors is recommended on every level of the home.

Possible causes of smoke detector activation:

Paint curing process - Open a window near the appliance for the first few hours of burning.

Exhaust being drawn back inside the dwelling - Outside air connection to the appliance is necessary.

Vent leakage - Follow venting manufacturer's recommendations for sealing pipe joints.

CAUTION

This appliance must be vented to the outside

H. Fuel Specifications

The Absolute63 Pellet Stove is approved for burning any grade of pelletized bio-mass fuel.

It should be noted, that higher ash content fuel will require more frequent cleaning.

The moisture content of pellets must not exceed 8%. Higher moisture will rob BTU's and may not burn properly.

Fuel should **not** be stored within the stove installation clearances or within the space required for cleaning and ash removal.

Fuel and Fuel Storage

Pellet fuel quality can fluctuate from manufacturer to manufacturer, and even from bag to bag.

Hearth & Home Technologies recommends using only fuel that is certified by the Pellet Fuels Institute (PFI).

Fuel Material
- Made from sawdust and/or other wood by-products.
- Source material typically determines ash content.

Higher Ash Content Material
- Hardwoods with high mineral content.
- Bark and leaves as source material.
- "Standard" grade pellets and other biomass.

Lower Ash Content Material
- Softwood; pine, fir, etc.
- Materials with lower mineral content.
- "Premium" grade pellets.

Performance
- Higher ash content requires more frequent maintenance.
- "Premium" grade pellets will produce the highest heat output.
- Burning pellets longer than 1-1/2 inches (38mm) can cause inconsistent feeding and/or ignition.

Clinkers
- Minerals and other non-combustible materials, like sand, will turn into a hard glass-like substance when heated.
- Trees from different areas will vary in mineral content. For this reason, some fuels will produce more clinkers than others.

Moisture
- Always burn dry fuel. Burning fuel with high moisture content takes energy to dry and tends to cool the appliance thus, robbing heat from your home.
- Damp pellet fuel could turn back into sawdust which does not flow properly through the feed system.

H. Fuel Specifications *(Cont.)*

Storage

- Wood pellets should be left in their original sealed bag until ready to use, to prevent moisture.
- Do not store fuel within the specified clearance areas, or in a location that will interfere with routine cleaning and maintenance procedures.

NOTICE

Hearth & Home Technologies is not responsible for stove performance or extra maintenance required as a result of using fuel with higher ash or mineral content.

CAUTION

Do not burn fuel that contains an additive.

- May cause hopper fire
- Damage to product may result

Read the list of ingredients on the packaging.

CAUTION

Tested and approved for use with wood pellets ONLY. Burning of any other fuel will void your warranty.

WARNING

BURNING COLORED PAPER, CARDBOARD, SOLVENTS, TRASH AND GARBAGE OR ALTERING THE STOVE FOR HIGHER HEAT OUTPUT MAY CAUSE DAMAGE TO THE STOVE AND COULD RESULT IN A HOUSE FIRE. USE ONLY APPROVED FUELS AND FOLLOW ONLY THESE OPERATION GUIDELINES.

WARNING

NEVER USE GASOLINE, GASOLINE-TYPE LANTERN FUEL, KEROSENE, CHARCOAL LIGHTER FLUID, OR SIMILAR LIQUIDS TO START OR 'FRESHEN UP' A FIRE IN THIS HEATER. KEEP ALL SUCH LIQUIDS WELL AWAY FROM THE HEATER, WHILE IN USE.

WARNING

Tested and approved for use with wood pellets ONLY. Burning of any other fuel will void your warranty.

I. Quick Start Guide

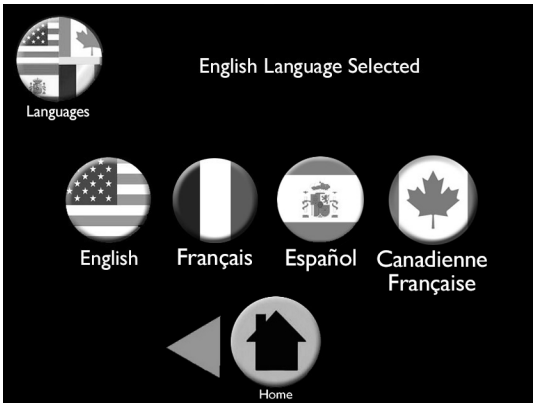

Initial start-up Only

1. Select Language

2. Fill hopper with pellets

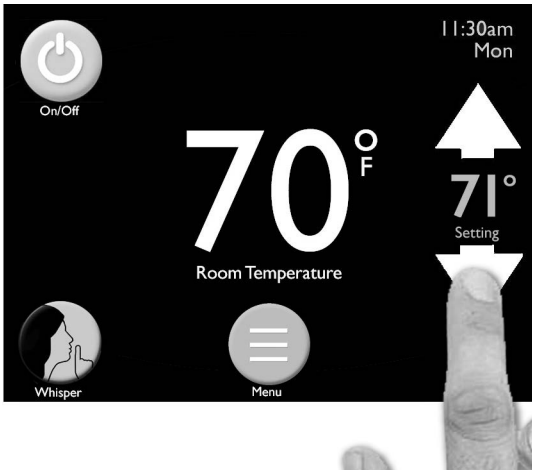

3. Adjust arrows to set room desired temperature.

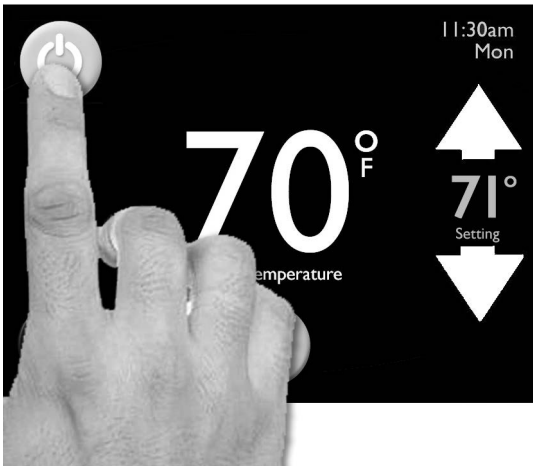

4. Touch the On/Off Power Icon.

Refer to Touch Manual for all other operations.

Please Note: *The USB port on the EASY Touch Control* ***<u>is not</u>*** *a charging port for smartphones, tablets etc.*

J. Frequently Asked Questions

With proper installation, operation, and maintenance your appliance will provide years of trouble-free service. If you do experience a problem, this troubleshooting guide will assist in the diagnosis of a problem and the corrective action to be taken.

Contact your dealer for additional information regarding operation and troubleshooting. Visit www.harmanstoves.com to find a dealer.

ISSUES	SOLUTIONS
Metallic noise.	Noise is caused by metal expanding and contracting as it heats up and cools down, similar to the sound produced by a furnace or heating duct. This noise does not affect the operation or longevity of your appliance.
White ash buildup on glass.	This is normal. Clean the glass using any non-abrasive glass cleaner.
Glass has buildup of black soot.	Excessive build-up of ash. The lower burn settings will produce more ash, the higher burn settings produce less. The more it burns on low the more frequent cleaning of the glass is required.
Glass has turned dirty.	Excessive build up of ash. The lower burn settings will produce more ash, the higher burn settings produce less. The more it burns on low the more frequent cleaning of the glass is required.
Fire has tall flames with black tails and is lazy.	The feed rate needs to be reduced or the burnpot needs cleaning. Heat exchanger or exhaust blower needs cleaning.
Smoky start-up or puffs of smoke from the airwash.	Burnpot may be dirty, clean the burnpot.
Large flame at start-up.	This is normal. Flame will settle down once the fire is established.
Missed Ignition.	Ensure there are pellets in burnpot. Ensure holes in burnpot are clear of obstructions above the igniter. See Burnpot Maintenance. Check to see if the ignitor is getting hot, if not replace ignitor. *See manual ignition instructions for emergency heating needs.

Touch Up Paint

The touch up paint provided with your unit is for fixing minor chips or blemishes that may occur after stove installation.

Unfortunately, because the finish of your stove is baked on, this touch up paint may not be a perfect match to the color of the original finish.

To use this touch up paint: Ensure the stove is cool and that the surface to be painted is clean. Apply in several light coats and take care to only coat the chipped area. Allow the paint to dry for 24 hours before touching or firing the stove.

K. Cleaning Prompts, Messages and Errors

Your EASY Touch Control communicates with you by showing messages on the top center of the EASY Touch Control home screen. If you have more than one message, the messages will show consecutively until you acknowledge the message by performing the task. These communications include:

PROMPTS	Scrape Burn Pot and Reset Here	When prompted, scrape burnpot. Press check-mark to reset.
	Empty Ash Pan and Press Here	When prompted, inspect and empty ash pan as needed. Press check-mark to reset.
	Total Clean and Reset	When prompted, inspect and perform total clean. Press check-mark to reset.
MESSAGES	Touch Here If Hopper Was Filled	Press check-mark if you filled the hopper. If you did not fill hopper, The message will disappear in 30 seconds.
	Wireless Sensor Low Battery Warning	Replace the 2 “AA” batteries in the Wireless Remote Sensor.
	Using Backup Sensor	If Wireless Remote Sensor batteries die, the Back Up Sensor will continue to heat your home.
ERRORS	Warning: Door Open	Check and close the front and ash doors for the stove to continue to heat.
	Warning: Hopper Lid Open	Close the hopper lid for the stove to continue to heat.
	Error: Check Fuel and Reset	Fill the hopper with pellets. Press check-mark to reset. If you did not fill the hopper, the message will stop after 30 seconds. This error only appears if “Show Fuel Gauges” is turned on.
	Wireless Signal Lost Replace Batteries in Wireless Sensor	Batteries in Wireless Remote Sensor have expired. Replace the 2 “AA” batteries.
	Return Air Sensor Failure	Return Air Sensor has failed. Call your Harman Dealer.
	Ignition Failure Correct and Reset	Unit has failed to ignite. Scrape the burnpot. Call your Harman Dealer if problem persists.
	Connection Failure Control <===> Display	Touch Control has lost communication to the stove. Turn Stove off, allow stove to cool. Unplug stove and plug back in. If issue persist call your Harman Dealer.
	Exhaust Sensing Probe Failure	Exhaust Sensing Probe (ESP) as failed. Clean the ESP. If issue persists, call your Harman Dealer.
	Combustion Error Correct and Reset	Clean your stove. Call your Harman Dealer if problem persists.

2 Maintenance & Service

When properly maintained, your stove will give you many years of trouble-free service. **Contact your dealer** to answer questions regarding proper operation, trouble-shooting and service for your appliance. Visit www.harmanstoves.com to find a dealer. We recommend annual service by a qualified service technician.

Note: Do not use a household vacuum to clean the stove. We recommend that you use a shop vacuum that is equipped with a fine dust filter called a HEPA filter or a vacuum specially made for fly ash and soot. USING A VACUUM WHICH IS NOT EQUIPPED WITH A FINE DUST FILTER WILL BLOW FLY ASH AND SOOT OUT INTO THE ROOM.

NOTE: THE STOVE MUST BE COMPLETELY OUT BEFORE YOU VACUUM THE STOVE. LIVE PELLET EMBERS, IF SUCKED INTO THE VACUUM, WILL LIGHT THE VACUUM ON FIRE AND MAY ULTIMATELY CAUSE A HOUSE FIRE.

NOTICE

The type of fuel you are burning will dictate how often you have to clean your burnpot. Clean more frequently if you encounter heavy build-up of ash at the recommended interval or you see soot coming from the vent. ***Not properly cleaning your appliance on a regular basis will void your warranty.***

A. Proper Shutdown Procedure

CAUTION

Shock and Smoke Hazard

- Turn unit to the off position, let appliance completely cool and combustion fan must be off. Now you can unplug appliance before servicing.
- Smoke spillage into room can occur if appliance is not cool before unplugging.
- Risk of shock if appliance not unplugged before servicing appliance.

Follow the detailed instructions found in this section for each step listed in the chart below.

B. Quick Reference Maintenance Chart

Frequency	Cleaning Procedure	Safety Measures	Tips
Daily	Scrape Burn pot	Wear flame resistant gloves[3]	Vigorous, strong scraping specifically near neck of burn pot. Scrape every time you add pellets or at least every 3 bags of fuel.[2]
Weekly	Empty Ash Pan	Wear protective gloves.[1] Put ashes into a steel non-combustible container with tight fitting lid outside.	Unit does not need to be turned off. Reduce to low burn during removal.
	Clean the Glass	Stove must be turned off and cold.	
Monthly	Scrape & Vacuum Heat Exchanger	Stove must be turned off and cold.	Use provided scraper. Scrape back and sides of firebox.
	Brush & vacuum the distribution fan	Stove must be turned off, cold and unplugged from power supply.	Use provided paint brush. This should be done approximately every 25 bags.[2]
	Inspect Hopper lid gasket for damage		Replace gasketing if frays, tears or other visible damage to gasket. This should be done approximately every 50 bags.[2]
	Clean Igniter	Stove must be turned off, cold and unplugged from power supply. Wear protective gloves.[1] Put ashes into a steel non-combustible container with tight fitting lid outside.	Use provided paint brush. Vacuum loose ash from around igniter and inside burn pot.
Stove MUST be turned off, cold and unplugged from power supply for Yearly Cleaning.			
Yearly[4]	Brush & vacuum the combustion fan and venting/exhaust path	Wear protective gloves.[1] Put ashes into a steel non-combustible container with tight fitting lid outside.	Use provided paint brush to brush fan blades. *Use flue brush to clean venting being careful not to damage the ESP.[2]
	Inspect door gasket		Replace gasketing if frays, tears or other visible damage to gasket.
	Brush & vacuum venting system	Wear protective gloves.[1] Put ashes into a steel non-combustible container with tight fitting lid outside.	

* A flue brush of appropriate size and length may need to be purchased for proper maintenance.

1. Protective gloves will help prevent skin abrasion while working on steel surfaces.
2. Frequency of cleaning depends largely on fuel type. Lower quality pellets require most frequent cleaning.
3. Flame resistant gloves will help protect your skin from potential contact with heat or flames.
4. Yearly cleaning is also known as a Total Clean. This requires completing all the Daily, Weekly, Monthly and Yearly maintenance mentioned. This should be done before you begin burning the unit each heating season.

C. Unit Maintenance

Daily/Weekly Maintenance: It is recommend that the burn pot be scraped whenever adding fuel; taking the opportunity to clean the burn pot will insure proper daily operation.

Scraping the Burn Pot-

- Using flame resistant gloves, vigorously scrape the top holed surface and sides of the burn pot down to auger tube, be sure to concentrate in the neck of the burnpot. Figure 2.1.
- Scrape loosened material over edge of burnpot grate into the ashpan.
- If needed, empty the ash pan while adding fuel and after scraping the burn pot.

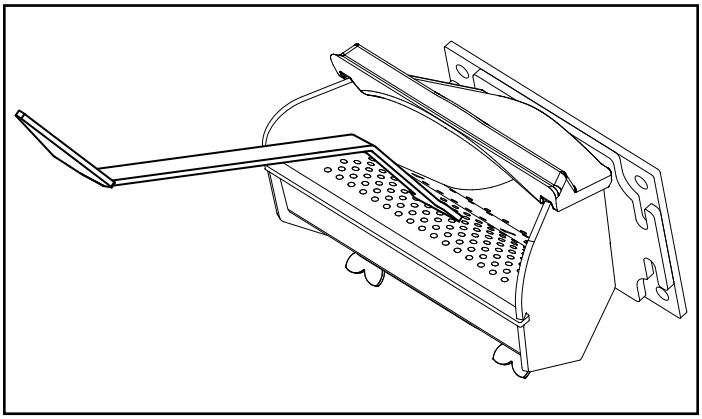

Figure 2.1

Monthly Maintenance: It is recommend that the unit be shut down and unplugged from any power source for a monthly cleaning. Monthly cleanings will insure proper operation of your unit throughout the heating season.

- Cleaning Glass - Once unit is cold, use a non-abrasive glass cleaner on glass and wipe clean.
- Scrape and Vacuum Heat Exchanger.

Cleaning the Heat Exchanger-
Clean the heat exchanger with scraper as shown in Figure 2.2. Brush or scrape the inside of the stove to remove fly ash. Remove the ash pan and dispose of ashes in an approved manner, according to local codes.

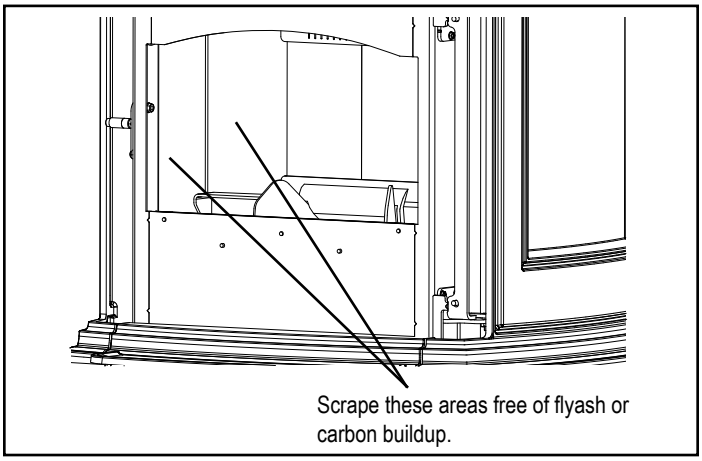

Figure 2.2

Cleaning the Burn Pot-

- Vigorously scrape the top holed surface and sides of the burn pot down to auger tube, as suggested in the Daily/ Weekly Maintenance Section.
- Use the supplied allen wrench to remove any build-up that may have accumulated in the holes of the burn pot grate. Simply push the allen wrench down through each hole ensuring it is clear of any build-up paying attention not to damage the igniter element in the process. Figure 2.3.

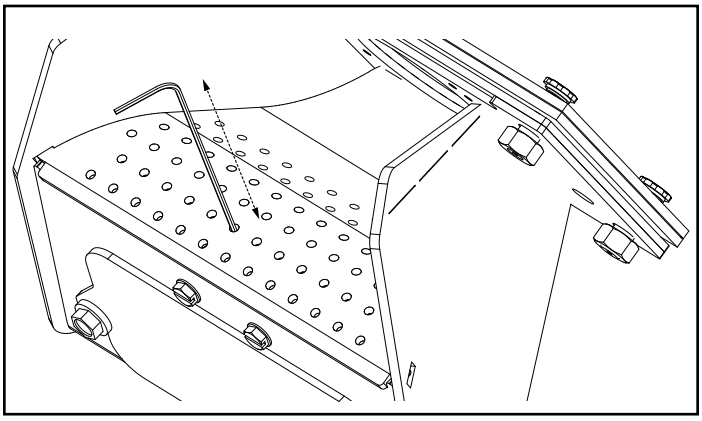

Figure 2.3

DANGER

Disconnect the power to the unit before removing cover.

- Loosen the (2) wing thumb screws on the lower front angle of the burn pot. Figure 2.4

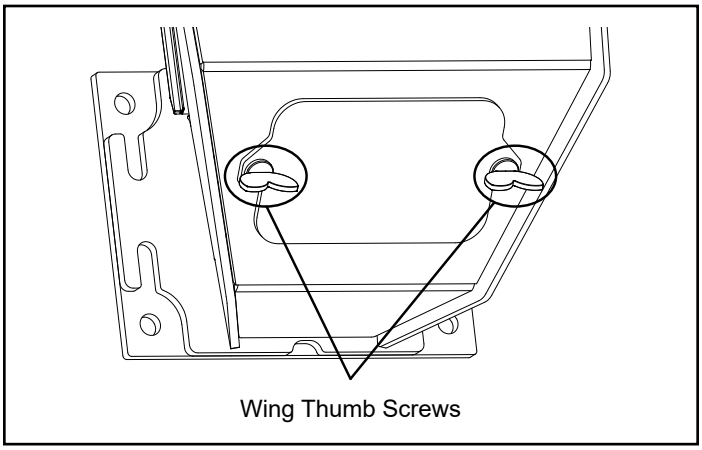

Figure 2.4

- Lift off the clean-out cover to open the bottom clean-out chamber. Figure 2.5
- Clean ash buildup from inside the chamber while cover is off. Use the scraper to tap on the top front edge of the burn pot. This will help knock pieces of ash, loosened by the scraping process, down through the holes. It also helps knock ash buildup from the igniter element and bracket.

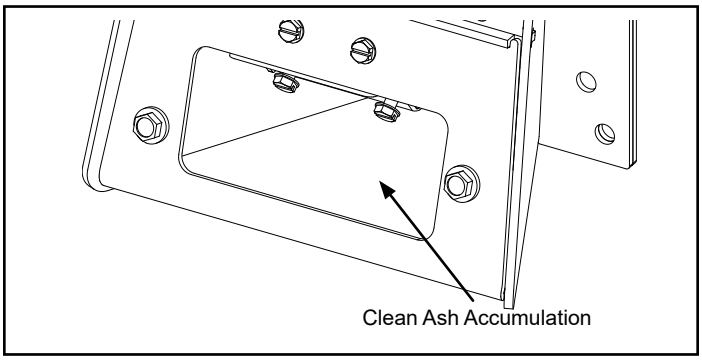

Figure 2.5

Cleaning Igniter Bracket-

Check cleanliness of the igniter and inner burnpot. If the igniter has ash buildup it must be removed to insure proper ignition. Use the provided brush to remove ash buildup from in and around the igniter. Once ash is loose vacuum around igniter and at the base of burn pot. Figure 2.6.

WARNING

Use caution when cleaning burn pot clean-out chamber. Do not damage the high temperature igniter wires.

Note: The hot lead/cold lead connection must always be pulled to the rear of the feeder body before operation.

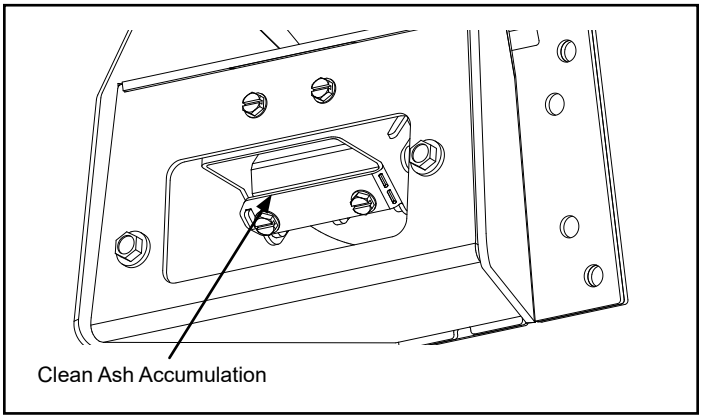

Figure 2.6

Yearly Maintenance: Cleaning the Combustion Fan Chamber-

The combustion inlet cover is located behind the ash pan that must be removed to properly clean the combustion fan blade. Figure 2.7.

- Remove combustion inlet cover by pulling up on cover. This allows access to the combustion fan blade and exhaust path. Figure 2.7.
- Remove any flyash or debris that has collected around combustion fan blade with the provided paint brush.
- Clean exhaust passage. Figure 2.7.

NOTE: The ESP Sensor is located just inside the exhaust passage. Be sure not to damage the ESP Sensor while cleaning the exhaust passage.

- Once cleaned replace combustion inlet cover and ashpan.

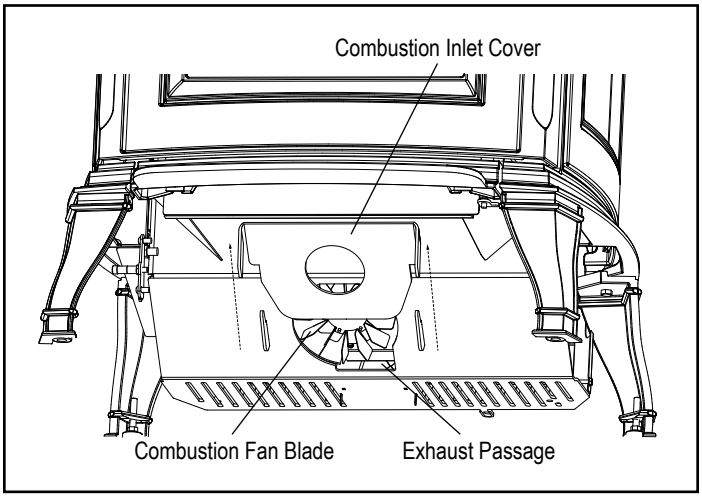

Figure 2.7

Caring for your Glass-

The glass used in your stove is manufactured to exact standards to withstand the high heat of the fire, but like all glass, it must be treated with common sense and care. Never abuse the glass by slamming the door shut or striking the glass with a heavy object. If the glass is broken or damaged, do not operate the stove until it has been replaced.

Glass - Replacement:

If the stove's glass is cracked or broken, you must replace it before operating your stove. Remove pieces carefully. Replace glass only with Harman® replacement glass; **do not use substitutes.**

Carefully remove damaged glass, gasket material, and glass clips (set aside). Figure 2.9.

Install the self adhesive 1/4" gasket material around the front face of the glass. Set the glass panel and gasket gently onto the door. Install the glass clips and 1/4-20 X 1/4" screws. **Note:** 1/4-20 X 1/4" screws only need to be snug fit. Do not overtighten.

Glass - Cleaning:

Sometimes it will be necessary to clean accumulated ash from the glass surface; allowing this ash to remain on the glass for long periods can result in "etching" due to the acidity of the ash. Never clean the glass while it is hot, and **do not** use abrasive substances. Wash the surface with cool water and rinse thoroughly. You may wish to use a non-abrasive cleaner specifically designed for use on stove glass. In any case, dry thoroughly before relighting your stove.

Inspect all Gaskets-

While the unit is cool, inspect all door gaskets to insure proper seal. The gasket should be continuous without frays or tears; having plyable gasket means having a correct seal for proper operation. Figure 2.9.

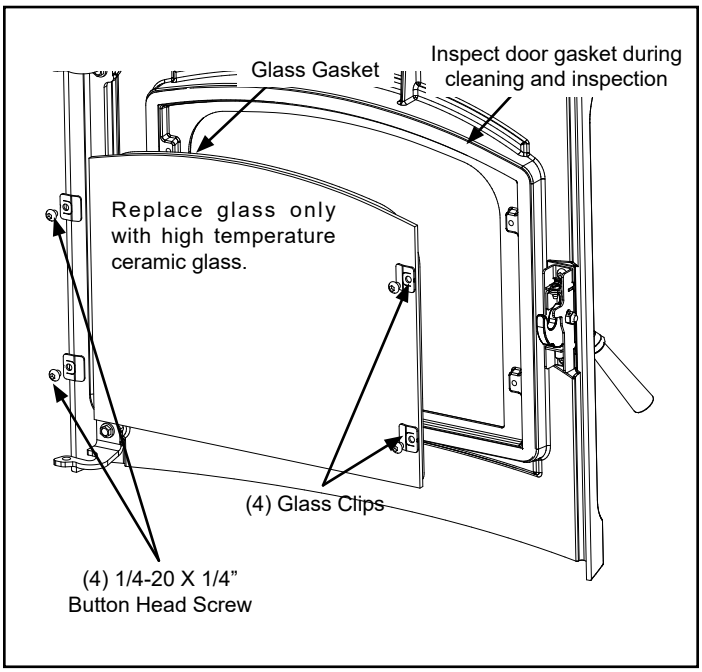

Figure 2.9

Distribution Blower-

Checking the distribution blowers yearly is a good habit to get into. Dust, animal hair or anything else that can make its way into that area can drastically cut down on the air movement throughout the unit ultimately causing less of a heating efficiency.

Once the unit is shut down and cooled, unplug the unit from its power supply. Remove the left and right rear panels. Once removed, you will have access to the distribution blowers. Figure 2.10.

Once access is gained to the rear of the unit, thoroughly vacuum around the Distribution Blowers. Figure 2.10.

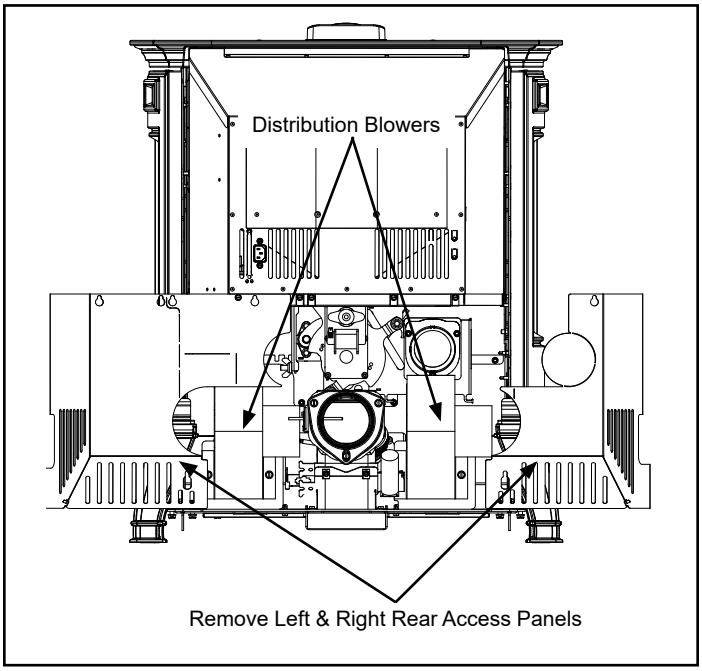

Figure 2.10

Cleaning Venting System-

Its is recommend that a certified chimney sweep perform service and inspection to your chimney system to insure your unit is vented safely and in accordance to local code.

A. Service Parts

HARMAN®
BUILT TO A STANDARD, NOT A PRICE

Service Parts **Absolute63**

Pellet Stove

Beginning Manufacturing Date: Dec 2016
Ending Manufacturing Date: Active

1-90-999000-1 (Matte Black)(Beginning Manufacturing Date: Dec 2016)(Ending Manufacturing Date: Feb 2020)
1-90-999000-14 (Majolica Brown)(Beginning Manufacturing Date: Dec 2016)(Ending Manufacturing Date: Feb 2020)
1-90-999001-1 (Matte Black w/Wireless)(Beginning Manufacturing Date: Dec 2016)
1-90-999001-14 (Majolica Brown w/Wireless)(Beginning Manufacturing Date: Dec 2016)

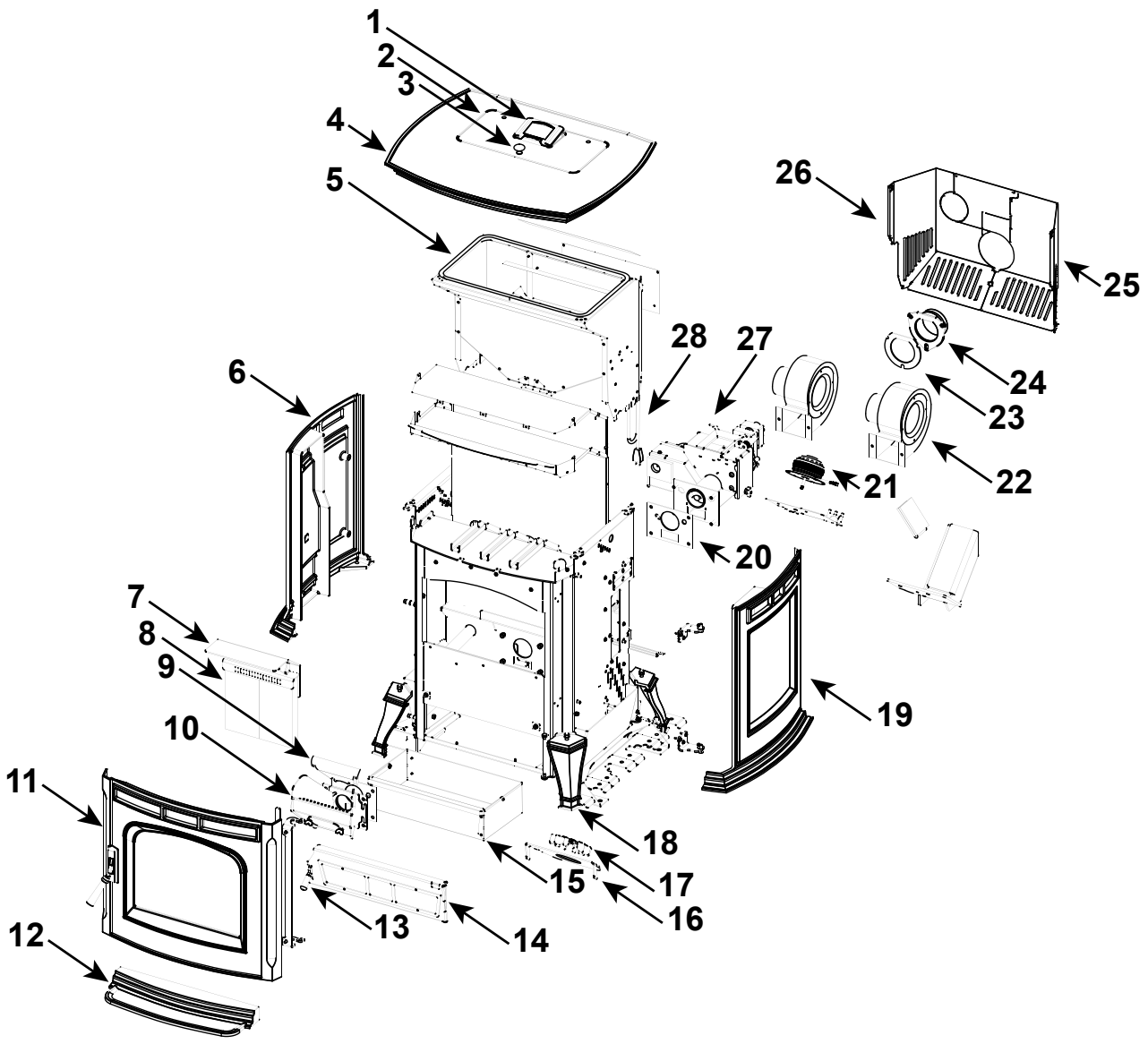

Part number list on following page.

Beginning Manufacturing Date: Dec 2016
Ending Manufacturing Date: Active

IMPORTANT: THIS IS DATED INFORMATION. Parts must be ordered from a dealer or distributor. **Hearth and Home Technologies does not sell directly to consumers.** Provide model number and serial number when requesting service parts from your dealer or distributor.

ITEM	DESCRIPTION	COMMENTS	PART NUMBER	Stocked at Depot
1	Touch Control		1-00-777552	Y
	Touch Control Screws	Pkg of 30	SRV8787-011	
	Cable Cover Gasket	Post 0081530362	3-44-777549	
2	16 X 8 Hopper Lid Glass		3-40-777770	Y
	Screwposts/Washers	Pkg of 20 Sets	1-00-129004	Y
	Gasket 3/8 X 1/2	20 Feet	1-00-375501	Y
3	Black Plated Knob w/Screw		1-00-02000-1	
	Complete Latch		1-00-0669697	
	5/16 X 1/2 Ball Plunger	Pkg of 3	3-31-5500-3	
	Bulk 5/16 Push Retainer	Pkg of 100	3-31-94807-100	
	Hopper Lid Hinge w/Hardware		1-00-777771	Y
	Hopper Lid Hinge Pin Plates w/Hardware	1 Set	1-00-777560	
4	Cast Top	Black	4-00-999132S	
		Majolica Brown	1-00-999132-14	
5	Hopper Assembly	**No longer available**	1-10-999157A	
	Gasket Hopper Throat		3-44-677185	Y
	Gasket 3/8 X 1/2 (non-enamel)	20 Feet	1-00-375501	Y
	Gasket 5/8 X 1/2 (enamel)	20 Feet	1-00-625501	Y
6	Left Side Cast	Black	4-00-999130P	
		Majolica Brown	1-00-999130-14	
7	Brick Support	**Pre HF1535822 and Post HF1536220**	1-10-999779W	Y
		HF1535822 Thru HF1536220	SRV8000-092	Y
8	Brick 9 X 4.5 X 1.25	Pkg of 7	1-00-900450125	Y
9	Flame Guide		3-00-06644	Y

#10 Burn Pot Assembly
Pre HF1533400

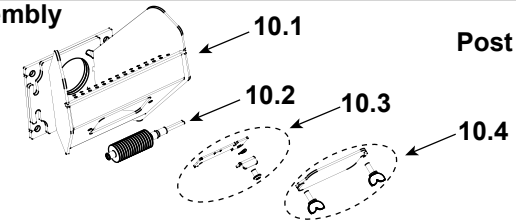

Post HF1533400

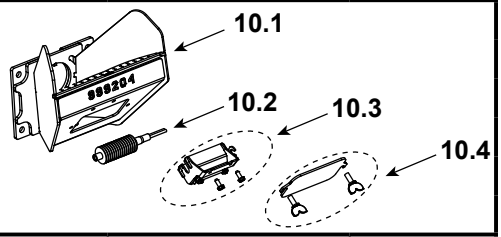

10	Burn Pot Assembly			
10.1	Burn Pot Weldment	Pre HF1533400	1-10-999674W	Y
		Post HF1533400	SRV1-10-999203	Y
	Gasket Set, Burn Pot & Tailpipe	Pkg of 5 Sets	1-00-07381	Y
10.2	Igniter		3-20-677200	Y
		Pkg of 10	1-00-677200	Y
10.3	Igniter Cover w/Hardware	Pre HF1533400	1-00-574402	Y
		Post HF1533400	1-00-777907	Y
10.4	Cleanout Cover w/Hardware		1-00-06623	Y
	1/4/-20x5/8	Pkg of 10	3-31-782108-10	Y

Additional service parts on following page.

Beginning Manufacturing Date: Dec 2016
Ending Manufacturing Date: Active

IMPORTANT: THIS IS DATED INFORMATION. Parts must be ordered from a dealer or distributor. **Hearth and Home Technologies does not sell directly to consumers.** Provide model number and serial number when requesting service parts from your dealer or distributor.

#11 Load Door

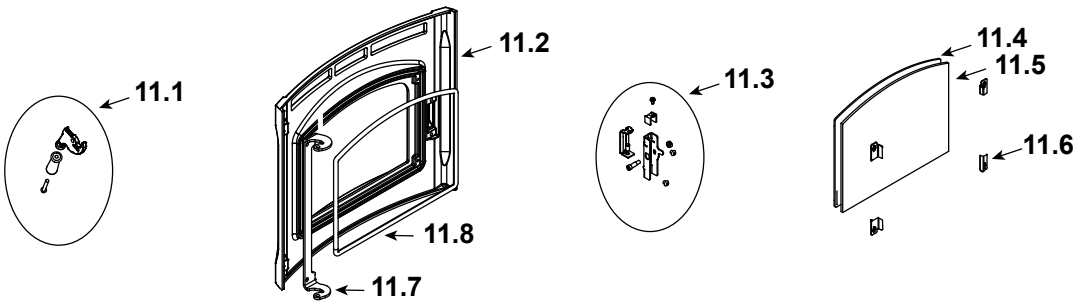

ITEM	DESCRIPTION	COMMENTS	PART NUMBER	Stocked at Depot
11	Load Door			
11.1	Cast Latch, Knob & Screw		1-00-0119	Y
	Wood Handle		3-40-00247	
11.2	Load Door, Roped	Black	4-00-999144P	Y
		Majolica Brown	1-00-999144-14	Y
11.3	Latch Bracket w/Hardware	1 Set	1-00-777665	Y
11.4	Gasket 1/4 RD PSA	15 Feet	1-00-2312	Y
11.5	Glass w/Gasket		1-00-999146	Y
11.6	Glass Clips w/Hardware	1 Set	1-00-999145	Y
11.7	Load Door Hinge w/Hardware	1 Set	1-00-999114	Y
11.8	Gasket 1/2” RD LD	20 Feet	1-00-1086204	Y
12	Ashlip	Black	3-00-999129P	
		Majolica Brown	1-00-999129-14	
13	Ash Door Handle Assembly	1 Set	1-00-777149	Y
	Rollers & Hardware	1 Set	1-00-77723	Y
14	Ash Door, Complete		1-10-999135A	
	Gasket 1/2” RD LD	20 Feet	1-00-1086204	Y
	Hinge, Bottom		SRV1-10-999177	
15	Ash Pan		1-10-999133A	Y
16	Inlet Cover		1-00-777607	
17	Combustion Blower Fan Blade		1-10-574500A	Y
18	Leg w/Hardware	Black	1-00-249100	Y
		Majolica Brown	1-00-249100-14	Y
	Leg Leveling Kit	1 Set	1-00-12302	
19	Right Side Cast	Black	4-00-999131P	
		Majolica Brown	1-00-999131-14	
20	Gasket Set, Burn Pot & Tailpipe	Pkg of 5 Sets	1-00-07381	Y

Additional service parts on following page.

Beginning Manufacturing Date: Dec 2016
Ending Manufacturing Date: Active

IMPORTANT: THIS IS DATED INFORMATION. Parts must be ordered from a dealer or distributor. **Hearth and Home Technologies does not sell directly to consumers.** Provide model number and serial number when requesting service parts from your dealer or distributor.

ITEM	DESCRIPTION	COMMENTS	PART NUMBER	Stocked at Depot
21	Combustion Blower		1-00-02275	Y
	Combustion Blower Capacitor		1-00-00276	Y
	Studs and Nuts **(Post HF1531398)**	5 Sets	1-00-99922	
	Blower Mounting Screws **(Post HF1531398)**	5 Sets	1-00-832150	
22	Distribution Blower	Qty 2 req	3-21-33647	Y
23	Gasket Set, Burn Pot & Tailpipe	Pkg of 5 Sets	1-00-07381	Y
24	Pellet Tailpipe, Cast		3-00-247237	Y
25	Rear Cover, Right	Pre HF1533476	1-00-999125	Y
		Post HF1533476	SRV8787-005	Y
26	Rear Cover, Left	Pre HF1533476	1-00-999126	Y
		Post HF1533476	SRV8787-004	Y

#27 Feeder Assembly

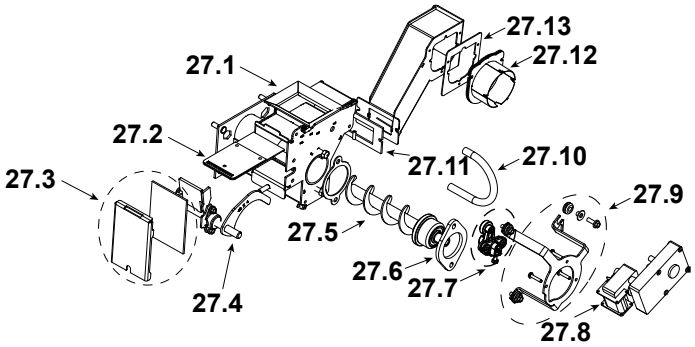

27	Feeder Assembly			
27.1	Feeder Body		1-10-680021W	Y
27.2	Slide Plate Assembly		1-10-677121A	Y
27.3	Feed Cover & Gasket	2 Sets	1-00-677122	Y
27.4	Pusher Arm		1-10-677131W	Y
	Pillow Block	Pkg of 4	3-31-3614087-4	Y
27.5	Auger		3-50-00565	Y
	Gasket, Auger	Pkg of 5	1-00-888196	
27.6	Bearing Retainer w/Hardware		1-00-04035	Y
	Cam Bearing		3-31-3014	Y
27.7	Cam Block Assembly		1-10-777950A	Y
27.8	6 RPM CW Outboard Motor, 120V		3-20-00999	Y
27.9	Motor Mount w/Hardware		1-00-999111	Y
27.10	Feeder Crossover Tube Kit		1-00-67900	Y
27.11	Gasket, Snout	Pkg of 10	3-44-677160-10	Y
27.12	Air Intake		1-10-06810A	
27.13	Gasket, Air Intake	Pgk of 6	3-44-72224-6	Y
28	Power Cord		3-20-51578	Y
	Line Filter		3-20-803744	Y
	Silicone Cap	Pgk of 10	3-99-123/10	

Additional service parts on following page.

Beginning Manufacturing Date: Dec 2016
Ending Manufacturing Date: Active

IMPORTANT: THIS IS DATED INFORMATION. Parts must be ordered from a dealer or distributor. **Hearth and Home Technologies does not sell directly to consumers.** Provide model number and serial number when requesting service parts from your dealer or distributor.

ITEM	DESCRIPTION	COMMENTS	PART NUMBER	Stocked at Depot
	5A Ceramic Fuse	Pkg of 5	1-00-05237	Y
	Burn Pot Scraper	Pkg of 10	2-00-777692-10	
	Communication Cable		3-20-72662	Y
	Component Pack		SRV8000-093	
	Differential Switch		SRV8320-003	Y
	Draft Meter Assembly		1-00-00637	
	Draft Meter Bolt & Tube		1-00-04004	
	ESP Probe-Red/Red		3-20-00844	Y
	External Temp Extension		3-20-70607	Y
	Flue Tube Cleaning Brush		3-40-00126	
	Bottom Heat Shield		1-00-999144	Y
	Control Board		1-00-05372	Y
	Return Air Sensor		3-20-08780	Y
	Smoke Shield		1-00-999143	
	Tinnerman 10-24	Pkg of 25	SRV3-31-00177	
	Thermostat Extension		3-20-00607	Y
	Touch Up Paint	Black	3-42-19905	
		Majolica Brown	1-00-0014	
	Wiring Harness		3-20-08888	Y
	Tubing, 1/8 Silicone	5 Feet	1-00-5113574	Y
	Wireless Room Sensor		3-20-777556	Y

B. Limited Lifetime Warranty

Hearth & Home Technologies LLC

LIMITED WARRANTY

Hearth & Home Technologies LLC ("HHT") extends the following warranty for HHT gas, wood, pellet and electric hearth appliances (each a "Product" and collectively, the "Product(s)") and certain component parts set forth in the table below ("Component Part(s)") that are purchased from a HHT authorized dealer or distributor.

WARRANTY COVERAGE:

HHT warrants that the Products and their Component Parts will be free from defects in materials and workmanship for the applicable period of Warranty coverage set forth in the table below ("Warranty Period"). If a Product or Component Parts are found to be defective in materials or workmanship during the applicable Warranty Period, HHT will, at our discretion, repair the applicable Component Part(s), replace the applicable Component Part(s), or refund the purchase price of the applicable Product(s). The maximum amount recoverable under this Warranty is limited to the purchase price of the Product. This Warranty is transferable from the original purchaser to subsequent owners, but the Warranty Period will not be extended in duration or expanded in coverage for any such transfer. This Warranty is subject to conditions, exclusions, and limitations as described below.

WARRANTY PERIOD:

Warranty coverage begins at the date of installation. In the case of new home constructions, Warranty coverage begins six months after invoice of the final sale of the Product(s) by an independent, authorized HHT dealer or distributor. However, the Warranty coverage shall commence no later than 24 months following the date of Product shipment from HHT, regardless of the installation or purchase date.

Warranty Period		HHT Manufactured Appliances and Venting				
Component Parts	Labor	Gas	Pellet	Wood	Electric	Component Parts Covered by this Warranty
1 Year		X	X	X		All parts including handles, external enameled components and other material except as covered by Warranty Conditions, Warranty Exclusions, and Warranty Limitations listed
2 Years					X	All parts except as covered by Warranty Conditions, Warranty Exclusions, and Warranty Limitations listed
			X	X		Glass, Electrical components limited to heating element/igniters, Top feed auger assembly, Blowers, Junction Box, Remotes/Wall switches, linear actuator, power cord, vacuum switch, snap disc, wire harnesses and thermocouple
		X				Electrical components limited to modules, remotes/wall switches, valves, pilots, blowers, junction boxes, wire harnesses, transformers and lights (excluding light bulbs)
		X		X		Cement Refractory Panels, Glass Liner Panels
3 years			X			Firepots, burnpots, Harman mechanical feeders
5 years		X		X		Catalysts, Vented and Vent Free burners and logs
10 years	1 year	X				Burners, logs and metal/fiber refractory components of HHT manufactured fireplaces or stoves, venting due to poor workmanship
10 years	3 years		X	X		Castings, Medallions & Baffles, FlexBurn® System (engine, inner cover, access cover and fireback), Firebox and heat exchanger, HHT Chimney & Terminations, Manifolds
20 years	3 years	X				Firebox and heat exchanger
All purchased replacement parts and optional accessories						
1 Year	None	X	X	X	X	All purchased replacement parts and optional accessories

4021-645N 12/23

Page 1 of 2

WARRANTY CONDITIONS:

- Because HHT cannot control the quality of any Products sold by unauthorized sellers, this Warranty only covers Products that are purchased through an HHT authorized dealer or distributor unless otherwise prohibited by law; a list of HHT authorized dealers is available on the HHT branded websites.
- This Warranty is only valid while the applicable Product remains at the site of original installation.
- This Warranty is only valid in the country in which the HHT authorized dealer or distributor that sold the applicable Product is authorized to sell applicable Product.
- Contact your installing distributor or dealer for Warranty service. If the installing dealer or distributor is unable to provide necessary parts, contact the nearest HHT authorized dealer or supplier. Additional service fees may apply if you are seeking Warranty service from a dealer other than the dealer from whom you originally purchased the applicable Product.
- No HHT consumer should bear cost of warranty service or costs incurred while servicing warranty claims (i.e., travel, gas, or mileage) when the service is performed within the terms of this Warranty. Check with your dealer or distributor in advance for any costs to you when arranging a warranty call. Travel and shipping charges for parts are not covered by this Warranty.

WARRANTY EXCLUSIONS:

This Warranty does not cover the following:

- Changes in surface finishes as a result of normal use. As a heating appliance, some changes in color of interior and exterior surface finishes may occur. This is not a flaw and is not covered under the Warranty.
- Damage to printed, plated, or enameled surfaces caused by fingerprints, accidents, misuse, scratches, melted items or other external sources and residues left on the plated surfaces from the use of abrasive cleaners or polishes.
- Repair or replacement of parts that are subject to normal wear and tear during the Warranty Period are not covered. These parts include: paint, wood and pellet gaskets, firebricks, wood grates, flame guides, batteries and the discoloration of glass.
- Minor expansion, contraction, or movement of certain parts causing noise. These conditions are normal and complaints related to this noise are not covered by this Warranty.
- Damages resulting from: (1) failure to install, operate, or maintain the applicable Product in accordance with the installation instructions, operating instructions, and listing agent identification label furnished with the applicable Product; (2) failure to install the applicable Product in accordance with local building codes; (3) shipping or improper handling; (4) improper operation, abuse, misuse, continued operation with damaged, corroded or failed components, accident, or improperly/incorrectly performed repairs; (5) environmental conditions, inadequate ventilation, negative pressure, or drafting caused by tightly sealed constructions, insufficient make-up air supply, or handling devices such as exhaust fans or forced air furnaces or other such causes; (6) use of fuels other than those specified in the operation instructions; (7) installation or use of components not supplied with the applicable Product or any other components not expressly authorized and approved by HHT; (8) modification of the appliance not expressly authorized and approved by HHT in writing; and/or (9) interruptions or fluctuations of electrical power supply to the applicable Product.
- Non-HHT venting components, hearth connections or other accessories used in conjunction with the applicable Product.
- Any part of a pre-existing fireplace system in which an insert or a decorative gas applicable Product is installed.
- HHT's obligation under this Warranty does not extend to the Product's capability to heat the desired space. Information is provided to assist the consumer and the dealer in selecting the proper Product for the application. Consideration must be given to the Product location and configuration, environmental conditions, insulation and air tightness of the structure.

This warranty is void if:

- The applicable Product has been over-fired, operated in atmospheres contaminated by chlorine, fluorine, or other damaging chemicals. Over-firing can be identified by, but not limited to, warped plates or tubes, deformation/warping of interior cast iron structure or components, rust colored cast iron, bubbling, cracking and discoloration of steel or enamel finishes.
- The applicable Product is subjected to prolonged periods of dampness or condensation.
- There is any damage to the applicable Product due to water or weather damage which is the result of, but not limited to, improper chimney or venting installation.

LIMITATIONS OF REMEDIES AND LIABILITY:

- **EXCEPT TO THE EXTENT PROVIDED BY LAW, HHT MAKES NO EXPRESS WARRANTIES OTHER THAN THE WARRANTY SPECIFIED HEREIN. The owner's exclusive remedy and HHT's sole obligation under this Warranty or in contract, tort or otherwise, shall be limited to, at HHT's sole option, replacement of the Component Part(s), repair of the Component Part(s), or refund of the original purchase price of the applicable Product(s). In no event will HHT be liable for any incidental or consequential damages caused by defects in the applicable Product. Some States do not allow the exclusion or limitation of incidental or consequential damages, so the above limitation or exclusion may not apply to you. This Warranty gives you specific legal rights and you may also have other rights which vary from State to State. THE DURATION OF ANY IMPLIED WARRANTY IS LIMITED TO DURATION OF THE EXPRESSED WARRANTY SPECIFIED ABOVE FOR THE APPLICABLE PRODUCT. Some States do not allow limitations on how long an implied warranty lasts, so the above limitation may not apply to you.**

C. Loss of Power

Harman pellet burning appliances rely on a combustion blower to remove exhaust from the firebox. A power failure will cause the combustion blower to stop running, which may lead to exhaust see page into the room. Vertical rise in the venting system can help create natural draft, which may reduce the likelihood of exhaust leakage into the home.

Installation of a low-cost uninterruptible power supply (UPS) or battery backup system can help ensure the units shuts down without any minor smoke leakage into the home. Harman recommends the installation of one of these two systems for areas prone to power outages.

There is one Harman® approved UPS option for your appliance:

Uninterruptible Power Supply UPS battery back-ups are available online or at computer and office equipment stores. Your Harman® appliance with Rev E or later software available beginning in November 2010 may be plugged directly into a Harman® approved UPS:

- **TrippLite model INTERNET750U** is tested and approved. Other brands or models may not be compatible.

When power is lost, a fully charged UPS will power a safe, combustion blower only shut-down. Your appliance will pulse the blower every few seconds to clear exhaust until the fire is out. **NOTE: The UPS provides safe shut-down only. It is not intended for continued operation.**

- A Inverter/Charger connects to a 12 volt deep cycle battery that will run your appliance for up to eight (8) hours. It includes a trickle charge feature that keeps your battery charged when power is available. **NOTE:** If the power is out for longer than battery life, smoke leakage may still occur unless your stove has been safely shut down.

For an approved Inverter/Charger refer to www.harmanstoves.com.

Your appliance will recognize when power is restored. What happens depends on ESP temperature and whether it is equipped with automatic ignition:

- **In "Automatic" Mode**, units equipped with automatic ignition will respond to the set point and ESP temperature and resume normal operation.
- **In "Idle" Mode**, or for units without automatic ignition:
  - If the ESP is cool, the appliance will remain shut down.
  - If the fire is out and the ESP is still warm, the feeder may restart. Since the fire is out, the ESP temperature will not rise. The unit will then shut-down, and may flash a six-blink status error. (See ESP error codes)
  - If the fire is still burning, it will resume normal operation.

Contact your dealer if you have questions about UPS compatibility with your appliance.

IMPORTANT! : UPS or Battery Backup cannot prevent smoke leakage from an improperly maintained unit. Keep the venting system clean and free from obstructions and maintain all gaskets to keep an airtight seal.

WARNING

Use only Harman® approved battery back-up devices. Other products may not operate properly, can create unsafe conditions or damage your appliance.

CAUTION

Always keep appliance doors and hopper lid closed and latched during operation and during power failures to minimize risk of smoke or burn-back.

D. Emergency Manual Ignition

Harman® pellet stoves and inserts should be lit using the automatic ignition system. This is the safest and most reliable way for igniting the unit. In the event the automatic igniter is not functioning, the steps below may be followed to manually light the stove or insert in the "Constant Burn" mode. Manual lighting is for emergency purposes only, and the igniter should be repaired or replaced as soon as practical.

WARNING

Only use firestarter commercially marketed for pellet stoves and inserts, including wax coated wood chips, pellet starter gel and pellet igniter blocks. Use of any other type of firestarter is prohibited.

To avoid serious injury or death read and follow manufacturer's warning and instructions for use of firestarter. Use of firestarter is only permitted when performing a cold start.

Never attempt to manually light a stove or insert that has been operated recently and is not at room temperature. If automatic ignition was attempted, be sure to give the stove or insert at least 30 minutes or longer to cool to room temperature.

Be sure that the stove or insert is in the "Igniter - Disabled" mode of operation.

Once all the precautions have been taken, follow these steps:

1. On the touch control, select the Burn Mode icon then select "Constant Burn".
2. Arrow back and select the Igniter icon then select "Manual" for the ignition method. Select the Home Icon to go back to the Main Menu.
3. Fill burn pot with pellets, only half way. (Do Not Over Fill).
4. Add firestarter to pellets following manufacturer's instructions.
5. Light pellet firestarter with a match, and close the door, touch the On/Off icon on the home screen. Operation will begin when the fire reaches the proper temperature.

E. Troubleshooting

ISSUES	SOLUTIONS
Stove does not feed	• No fuel in hopper. • Firebox draft may be too low for sensing switch in feeder circuit to operate. **Check for closed doors**, loose or missing gasket on doors or hopper lid. • Restriction in the hopper or feeder. Remove all fuel and examine. Clear the obstruction. • Feed motor has failed.
Partially burned pellets	• Feed rate too high. • Poor air to fuel mixture. (Check burn pot clean-out cover and air intake). • Burn pot may need to be cleaned. • Combination of all the above.
Smoke smell	Seal the vent pipe joints and connection to stove with silicone. The exhaust vent is the only part of the system that is under positive pressure.
Fire has gone out	• No fuel in hopper. • Draft is too low, blocked flue. • Something is restricting fuel flow. • Hopper lid not closed properly. • Feed motor or combustion fan has failed.
Smoke is visible coming out of vent	• Air-fuel ratio is too rich. - Feed rate too high. - Draft too low caused by a gasket leak.
Low heat output	• Feed rate too low. • Draft too low because of gasket leak. • Poor quality or damp pellets. • Combination of 1 and 2.
Stove does not ignite but igniter is operating correctly	• Burnpot has excess ash located around igniter and bracket. • Burpot grate holes are blocked or partially block.

F. Contact Information

HARMAN®
a brand of
Hearth & Home Technologies
352 Mountain House Road, Halifax, PA 17032
www.harmanstoves.com

Please contact your Harman® dealer with any questions or concerns.
For the location of your nearest Harman® dealer,
please visit www.harmanstoves.com.

- NOTES -

_____

_____

_____

_____

_____

_____

_____

_____

_____

NOTICE

DO NOT DISCARD THIS MANUAL

- Important operating and maintenance instructions included.
- Read, understand and follow these instructions for safe installation and operation.
- Leave this manual with party responsible for use and operation.

Printed in U.S.A.