Installation Manual

Installation and Fireplace Setup

INSTALLER: Leave this manual with party responsible for use and operation.
OWNER: Retain this manual for future reference.

***NOTICE: DO NOT** discard this manual!*

heatilator®
The first name in fireplaces

Model(s):

MHST36D

UL® LISTED

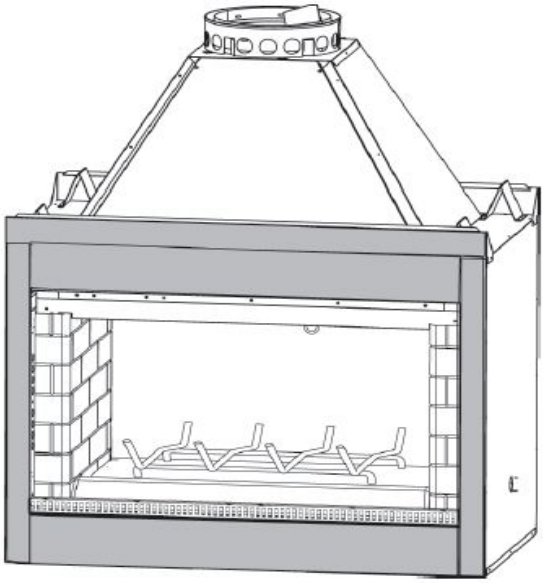

WOODBURNING FIREPLACE
MANUFACTURED HOME APPROVED

Installation and service of this appliance should be performed by qualified personnel. Hearth & Home Technologies recommends HHT Factory Trained or NFI certified professionals.

hearthED FACTORY TRAINING *Fuel Your Fire*

NFI NATIONAL FIREPLACE INSTITUTE® A CERTIFICATION AGENCY

⚠ WARNING: If the information in these instructions is not followed exactly, a fire or explosion may result causing property damage, personal injury, or death.

- **DO NOT** store or use gasoline or other flammable vapors and liquids in the vicinity of this or any other appliance.
- **DO NOT** overfire. Overfiring will void your warranty.
- Comply with all minimum clearances to combustibles as specified. Failure to comply may cause house fire.

⚠ WARNING

HOT SURFACES!
Glass and other surfaces are hot during operation AND cool down.

Hot glass will cause burns.
- **DO NOT** touch glass until it is cooled
- NEVER allow children to touch glass
- Keep children away

- CAREFULLY SUPERVISE children in same room as fireplace.
- Alert children and adults to hazards of high temperatures.

High temperatures may ignite clothing or other flammable materials.
- Keep clothing, furniture, draperies and other flammable materials away.

⚠ WARNING

Fire Risk.

For use with solid wood fuel only.
Other fuels may overfire and generate poisonous gases (i.e. carbon monoxide).

Safety Alert Key:

- ***DANGER!*** Indicates a hazardous situation which, if not avoided will result in death or serious injury.
- ***WARNING!*** Indicates a hazardous situation which, if not avoided could result in death or serious injury.
- ***CAUTION!*** Indicates a hazardous situation which, if not avoided, could result in minor or moderate injury.
- ***NOTICE:*** Indicates practices which may cause damage to the fireplace or to property.

Table of Contents

ATTENTION INSTALLER:

Follow this Standard Work Checklist

This standard work checklist is to be used by the installer in conjuction with, not instead of, the instructions contained in this installation manual.

Customer: _____
Lot/Address _____
_____
Model (circle one): MHST36D

Date Installed: _____
Location of Fireplace: _____
Installer: _____
Dealer/Distributor Phone # _____
Serial #: _____

WARNING! Risk of Fire or Explosion! *Failure to install fireplace acording to these instructions can lead to a fire or explosion.*

Fireplace Install	**YES**	**IF NO, WHY?**
Verified clearances to combustibles. (Pg. 10)	☐	
Fireplace is leveled and secured. (Pg. 11)	☐	
Protective hearth strips installed per manual requirements. (Pg. 12)	☐	
Hearth extension size/height decided. (Pg. 24)	☐	
Outside air kit installed. (Pg 12)	☐	
Chimney Section 4 & 5 (Pg. 14)		
Chimney configuration complies with diagrams.	☐	
Chimney installed, locked and secured in place with proper clearance.	☐	
Firestops installed.	☐	
Mobile home thimble installed.	☐	
Roof flashing installed.	☐	
Terminations installed.	☐	
Finishing Section 6 (Pg. 23)		
Combustible materials not installed in non-combustible areas.	☐	
Verified all clearances meet installation manual requirements.	☐	
Mantels and wall projections comply with installation manual requirements.	☐	
Hearth extension installed per manual requirements.	☐	
Fireplace Setup Section 7 (Pg. 30)		
All packaging and protective materials removed.	☐	
Molded brick panels installed correctly.	☐	
Grate is properly installed.	☐	
Firescreen installed properly.	☐	
Doors properly installed.	☐	
Manual bag and all of its contents are removed from the fireplace and given to the party responsible for use and operation.	☐	

Hearth & Home Technologies recommends the following:

- Photographing the installation and copying this checklist for your file.
- That this checklist remain visible at all times on the fireplace until the installation is complete.

Comments: Further description of the issues, who is responsible (Installer/Builder/Other Trades, etc.) and corrective action needed:

_____
_____
_____

Comments communicated to party responsible _____ by _____on _____
(Builder/Gen. Contractor) (Installer) (Date)

4012-087 • Rev A • 09/09/14

1 Product Specific & Important Safety Information

A. Fireplace Certification

This fireplace system has been tested and listed in accordance with UL 127 standards by Underwriters Laboratories Inc. for installation and operation in the United States.

This fireplace may be installed in manufactured homes, except sleeping rooms. If installed with a gas log set, provisions for the National Fuel Gas Code must be met.

This fireplace has been tested and listed for use with the optional components specified in this manual. These optional components may be purchased separately and installed at a later date. An outside air kit, gas insert, gas log set or gas log-lighter should be installed at the time of fireplace installation.

This fireplace complies with the installation requirements for HUD.

Heatilator is a registered trademark of Hearth & Home Technologies.

WARNING! Risk of Fire! *Hearth & Home Technologies disclaims any responsibility for, and the warranty and agency listing will be voided by the following actions.*

DO NOT:

- *install or operate damaged fireplace*
- *modify fireplace*
- *install other than as instructed by Hearth & Home Technologies*
- *operate the fireplace without fully assembling all components*
- *overfire*
- *install unvented gas log set*
- *install any component not approved by Hearth & Home Technologies*
- *install parts or components not Listed or approved*

Improper installation, adjustment, alteration, service or maintenance can cause injury or property damage. For assistance or additional information, consult a qualified installer, service agency or your dealer.

B. Non-Combustible Materials

- Materials which will not ignite and burn, composed of any combination of the following:
  - Steel
  - Iron
  - Brick
  - Tile
  - Concrete
  - Slate
  - Glass
  - Plasters
- Materials reported as passing **ASTM E 136, Standard Test Method for Behavior of Materials, in a Vertical Tube Furnace at 750° C**

C. Combustible Materials

- Materials made of or surfaced with any of the following materials:
  - Wood
  - Compressed paper
  - Plant fibers
  - Plastic
  - Plywood/OSB
  - Sheet rock (drywall)
- Any material that can ignite and burn; flame proofed or not, plastered or un-plastered

2 Getting Started

A. Typical Fireplace System

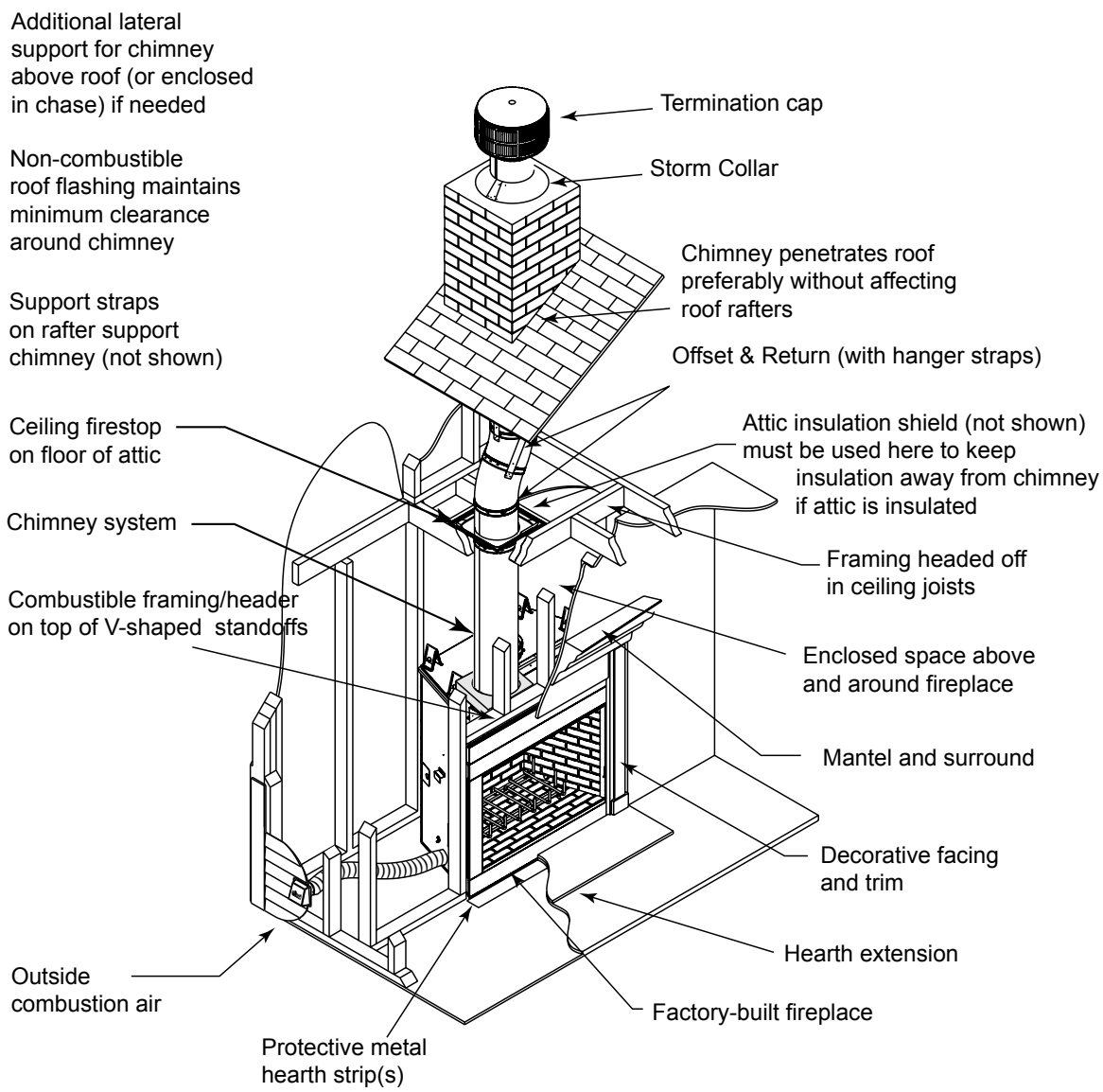

Figure 2.1 Typical Fireplace System

B. Design and Installation Considerations

NOTICE: *Check building codes prior to installation.*

- Installation MUST comply with local, regional, state and national codes and regulations.
- Consult insurance carrier, local building inspector, fire officials or authorities having jurisdiction over restrictions, installation inspection and permits.
- **Before installing**, determine the following:
  - Where the fireplace is to be installed.
  - The vent system configuration to be used.
  - Gas supply piping.
  - Electrical wiring.
  - Framing and finishing details.
  - Whether optional accessories - devices such as a fan, wall switch or remote control - are desired.

1. Selecting Fireplace Locations

This fireplace may be used as a room divider, installed along a wall. See Figure 2.2.

Locating the fireplace in a basement should be avoided. Locating near frequently opened doors, central heat outlets or returns, or other locations of considerable air movement can affect the performance.

Outside air must be used for combustion. This fireplace comes equipped with an outside air inlet to feed combustion air from outside the home, along with an outside air termination cap; the duct is required but not supplied. Consideration should be given to these factors before deciding on a location.

NOTICE: *In addition to these framing dimensions, also reference the following section:*

- *Clearances (Section 3).*

NOTICE:

- *Illustrations and photos reflect typical installations and are FOR DESIGN PURPOSES ONLY.*
- *Illustrations/diagrams are not drawn to scale.*
- *Actual installation/appearance may vary due to individual design preference.*
- *Hearth & Home Technologies reserves the right to alter its products.*

NOTICE:
A minimum 1/2 in. air clearance at the sides of the fireplace assembly must be maintained.

Chimney sections at any level require a 2 in. minimum air space clearance between the framing and chimney sections.

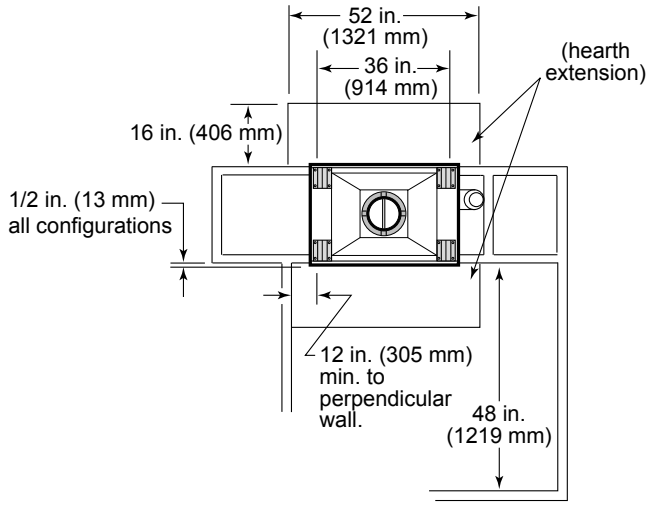

Figure 2.2 Fireplace Locations

2. Locating Fireplace & Chimney

Location of the fireplace and chimney will affect performance.

- Install within the warm airspace enclosed by the building envelope. This helps to produce more draft, especially during lighting and die-down of the fire.
- Installing the fireplace in a basement is not recommended.
- Penetrate the highest part of the roof. This minimizes the effects of wind loading.
- Locate termination cap away from trees, adjacent structures, uneven roof lines and other obstructions.
- Minimize the use of chimney offsets.
- Consider the fireplace location relative to floor and ceiling and attic joists.
- Take into consideration the termination requirements in Sections 4 and 5.
- Install the outside air kit with the intake facing prevailing winds during the heating season.
- Ensure adequate outdoor air for <u>all</u> combustion appliances and exhaust equipment.
- Ensure furnace and air conditioning return vents are not located in the immediate vicinity of the fireplace.
- Avoid installing the fireplace near doors, walkways or small isolated spaces.
- Recessed lighting should be a “sealed can” design.
- Attic hatches weather stripped or sealed.
- Attic mounted duct work and air handler joints and seams taped or sealed.

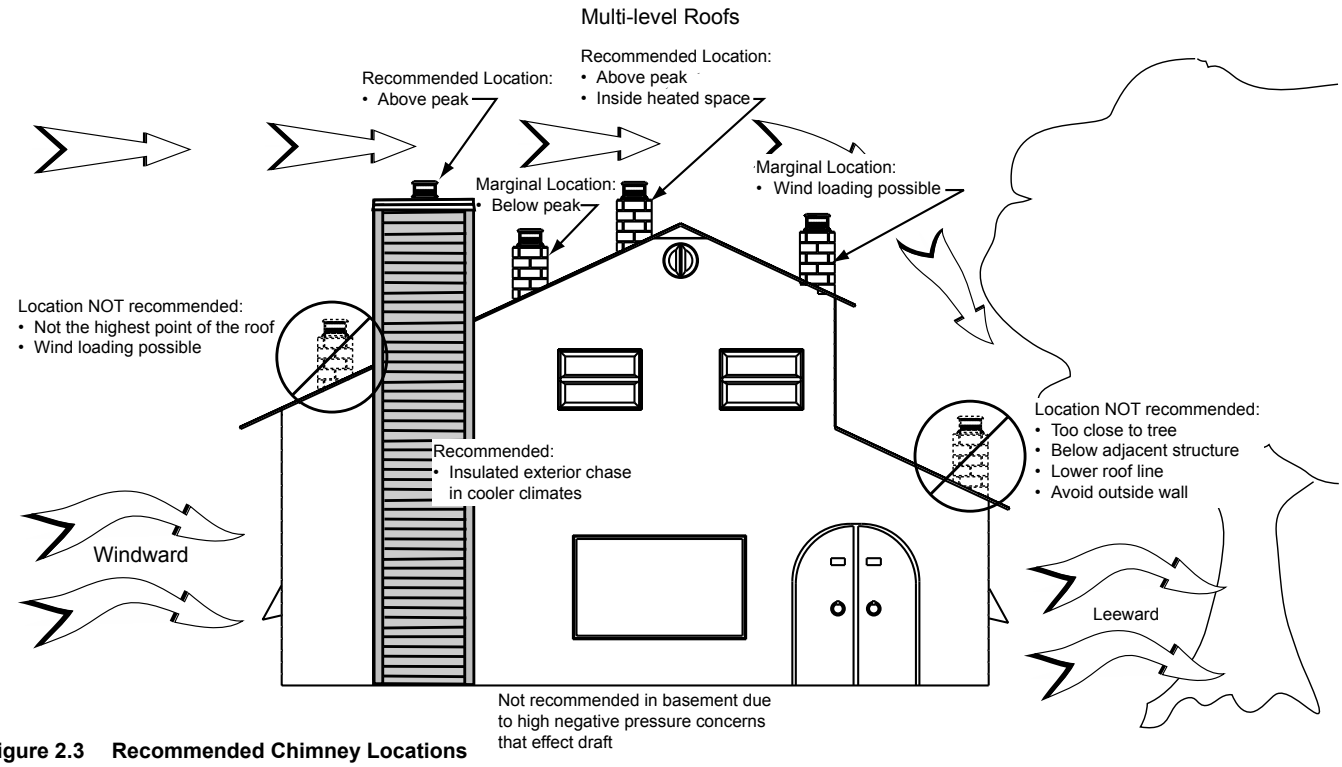

Figure 2.3 Recommended Chimney Locations

C. Tools and Supplies Needed

Before beginning the installation be sure the following tools and building supplies are available:

Reciprocating saw	Framing material
Pliers	Non-combustible sealant
Hammer	Gloves
Phillips screwdriver	Framing square
Flat blade screwdriver	Electric drill and bits
Plumb line	Safety glasses
Level	Tape measure

1/2-3/4 in. length, #6 or #8 self-drilling screws

Misc. screws and nails

D. Inspect Fireplace and Components

WARNING! Risk of Fire and/or Explosion! *Damaged parts could impair safe operation.* ***DO NOT*** *install damaged, incomplete or substitute components. Keep fireplace dry.*

- Remove fireplace and components from packaging and inspect for damage.
- Vent system components and doors are shipped in separate packages.
- Report to your dealer any parts damaged in shipment.
- **Read all the instructions before starting the installation. Follow these instructions carefully during the installation to ensure maximum safety and benefit.**

E. Fireplace System Requirements

The Heatilator fireplace system requirements consist of the following:

- Fireplace
  - Refractory (included with fireplace)
  - Firescreen (included with fireplace)
  - Grate (included with fireplace)
  - Hearth Extension (required, sold separately)
- Outside Air System
  - Air Inlet Hood (included with fireplace)
  - Flex (required, sold separately)
- Chimney System
  - Attic Insulation Shield (included with fireplace)
  - Chimney termination cap (required, sold separately)
- Non-combustible finish material

3 Framing and Clearances

A. Fireplace Dimensions

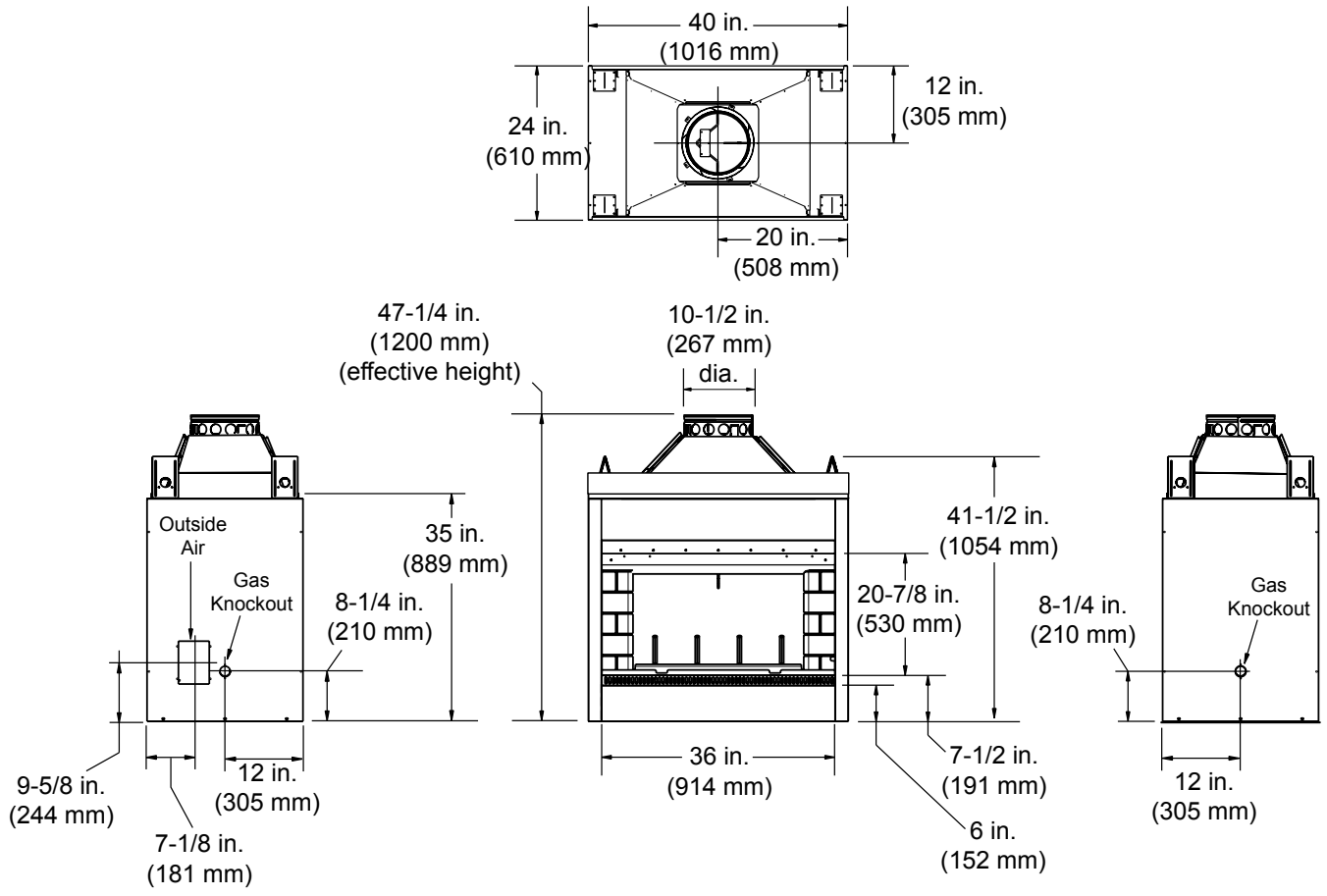

Figure 3.1 Fireplace Dimensions

B. Clearances

WARNING! Risk of Fire!

You must comply with all minimum air space clearances to combustibles as specified in Figure 3.2. ***DO NOT*** *pack required air spaces with insulation or other materials. Framing or finishing material used on the front of, or in front of, the fireplace closer than the minimums listed must be constructed entirely of non-combustible materials (i.e., steel studs, concrete board, etc.). Failure to comply may cause fire.*

Minimum Clearances to Combustibles

WITHIN ENCLOSURE AREA	
Fireplace to sidewall	1/2 in. (13 mm)
Top standoffs to header	0 in. (0 mm)
Door opening to sidewall	12 in. (305 mm)
MANTEL	
Mantel minimum height	40 3/8 in. (1026 mm)
Maximum mantel depth	12 in. (305 mm)

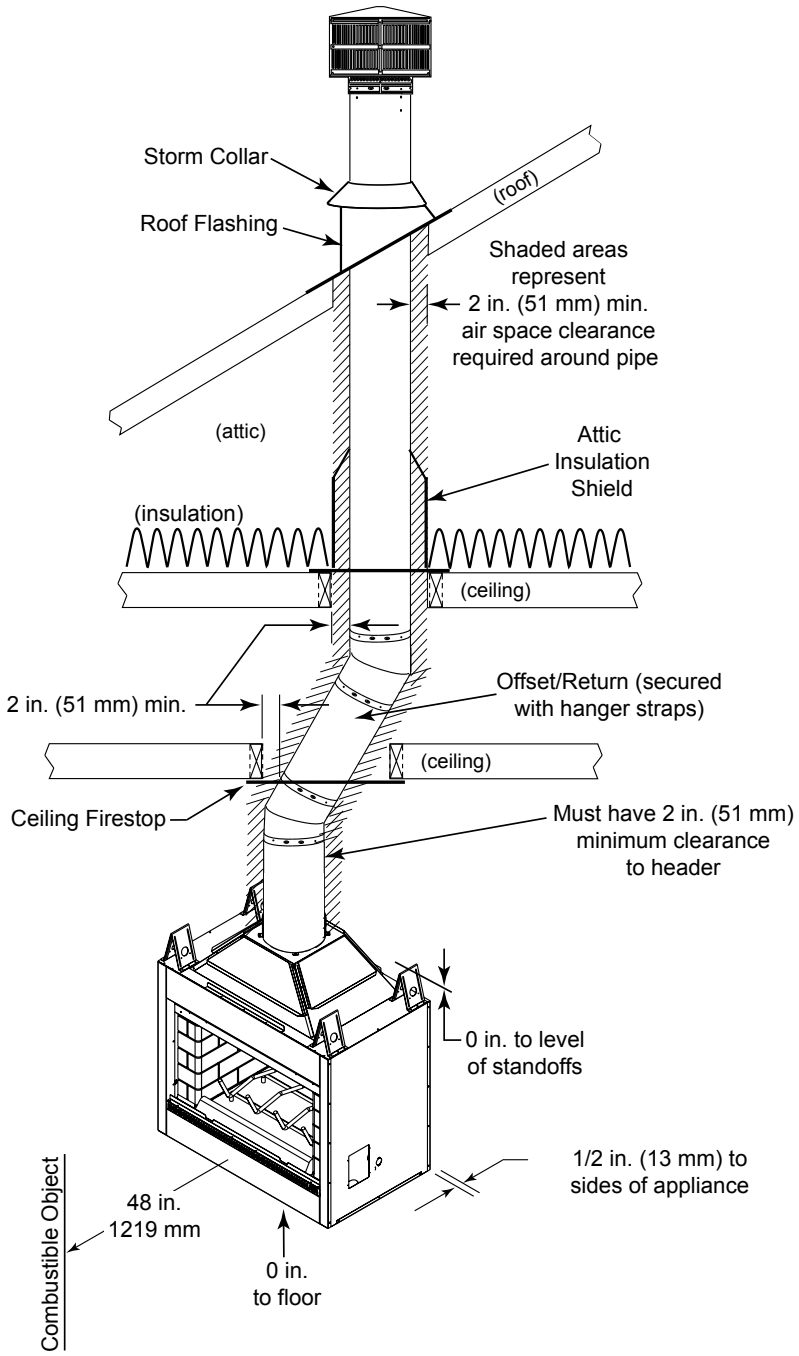

Figure 3.2 Clearances to Combustible Materials

C. Frame the Fireplace

NOTICE: Hearth extension design must be determined before installation of fireplace.

If the fireplace is placed on the floor the maximum height of a finished raised hearth is 6 in.; if you want a higher raised hearth the fireplace must be placed on a platform.

WARNING! Risk of Fire! *Comply with all minimum clearances specified.*

- *A minimum 1/2 in. (12 mm) air clearance must be maintained at the sides of the fireplace assembly.*
- *Chimney sections at any level require a 2 in. (51 mm) minimum air space clearance between the framing and chimney section.*

WARNING! Risk of Fire! *You must comply with all minimum air space clearances to combustibles.* ***DO NOT*** *pack required air spaces with insulation or other materials.*

Figure 3.5 shows a typical framing (using 2 x 4 lumber) of the fireplace, assuming combustible materials are used. All required clearances to combustibles around the fireplace must be adhered to. See Figure 3.2. Any framing across the top of the fireplace must be above the level of the top standoffs. (No recess above standoffs.)

The finished cavity depth must be no less than 23 in. (584 mm). Framing must extend straight up all the way to the ceiling.

CAUTION! *Risk of Cuts/Abrasions. Wear protective gloves and safety glasses during installation. Sheet metal edges are sharp.*

D. Secure and Level the Fireplace

This fireplace may be placed on either a combustible or noncombustible continuous flat surface. Follow the instructions for framing in Section 3. Slide the fireplace into position. Be sure to provide the minimum 1/2 in. air clearance at the sides of the fireplace.

The fireplace should be positioned so the face of the noncombustible material on the fireplace will be flush with the face of the drywall on the walls.

Level the fireplace and shim as necessary.

WARNING! Risk of Fire! *Prevent contact with sagging, loose insulation.*

- ***DO NOT*** *install against vapor barriers or exposed insulation.*
- *Secure insulation and vapor barriers.*
- *Provide minimum air space clearances at the sides and back of the fireplace assembly.*

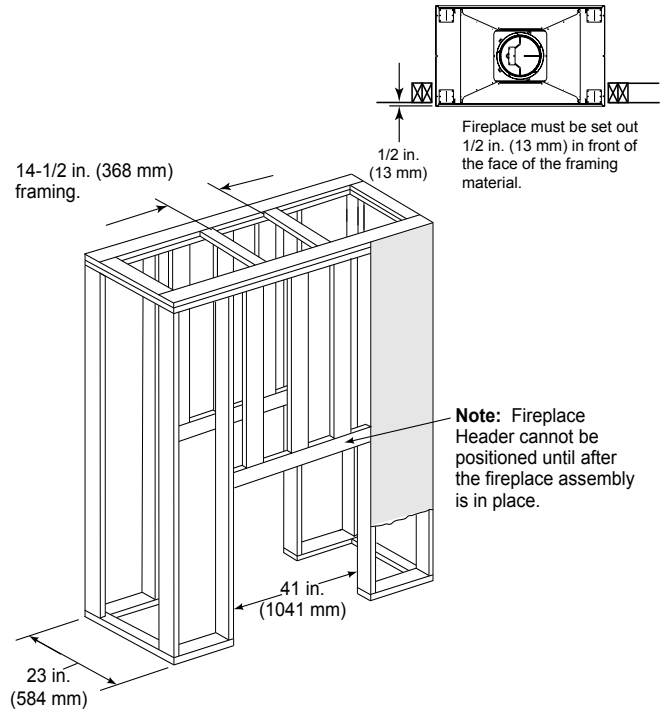

► **Figure 3.5 Framing the Fireplace**

E. Protective Metal Hearth Strips

WARNING! Risk of Fire! *Protective metal hearth strips MUST be installed on combustible surfaces.* ***DO NOT*** *cover metal strips with combustible materials. Sparks or embers may ignite flooring.*

WARNING! Risk of fire! *High temperatures, sparks, embers or other burning material falling from the fireplace may ignite flooring or concealed combustible surfaces.*

- *Protective metal hearth strips MUST be installed.*
- *Hearth extensions MUST be installed exactly as specified.*

- Locate the two protective metal hearth strips measuring approximately 26 in. x 4 in. (660 mm x 102 mm) included with this fireplace.
- Slide each metal strip 2 in. (51 mm) under front edge of fireplace.
- Overlap strips in the middle of fireplace opening by 1 in. (25 mm) minimum.
- Metal strips must extend beyond the front and sides of the fireplace opening by at least 2 in. (51 mm), Figure 3.6).
- Protect the front of a platform elevated above the hearth extension with metal strips (not included with fireplace) per Figure 3.6. See Section 7 for hearth extension instructions.

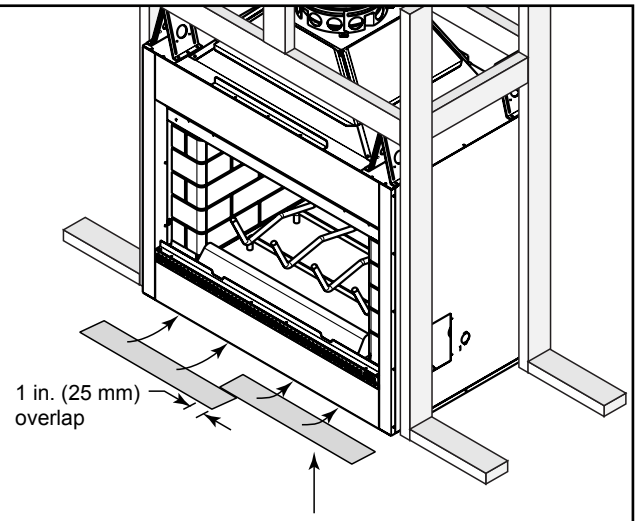

Protective metal strips are placed 2 in. (51 mm) under the front of the fireplace and must extend beyond the front and sides of fireplace opening by 2 in. (51 mm).

Figure 3.6 Position the Protective Metal Hearth Strips

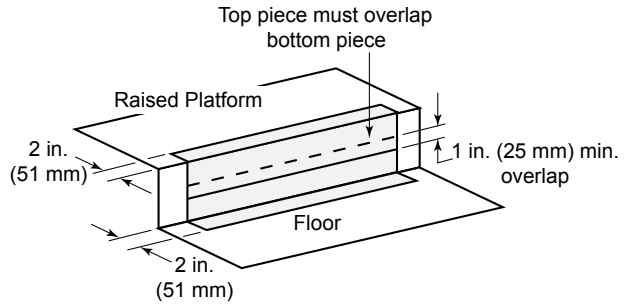

Figure 3.7 Protect the Front of an Elevated Platform

F. Install the Outside Air Kit

The outside air kit is supplied as a standard feature with this fireplace and its use is required to minimize the effects of negative pressure within the structure. It is recommended to utilize the shortest duct run to optimize the performance of the outside air kit. The outside air kit inlet thimble should be positioned above the ground level, in a manner that will not allow snow, leaves, etc. to block the inlet.

The outside air kit is installed on either side of the fireplace. Remove the cover plate from the side of the fireplace assembly where the air kit is to be installed. See Figure 3.9 for handle location/operation.

CAUTION! The air kit handle may get hot while burning the fireplace. USE CARE *when operating the handle.*

Locate outside air inlet hood to prevent blockage from leaves, snow/ice, or other debris. Blockages could cause combustion air starvation.

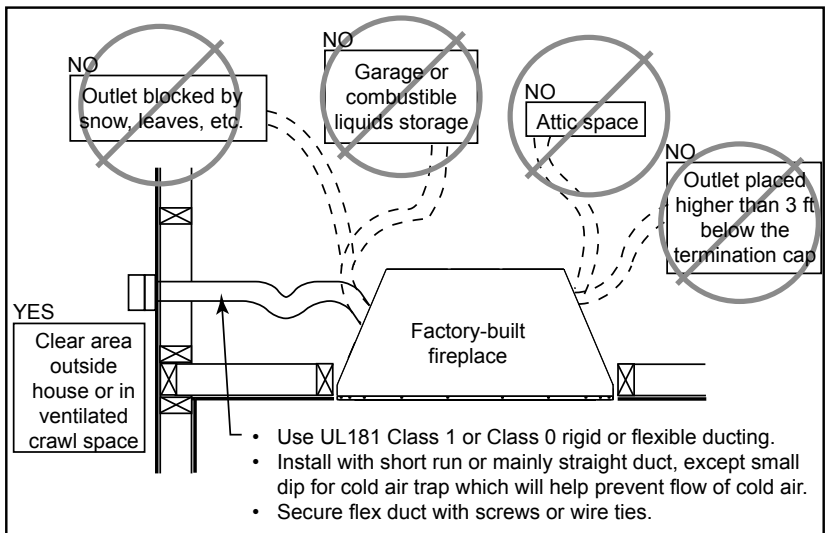

Figure 3.8 Outside Air Installation

CAUTION! Risk of Cuts/Abrasions. *Wear protective gloves and safety glasses during installation. Sheet metal edges are sharp.*

- The hinge will be toward the front of the fireplace.
- Insert the narrow end of the handle into the upper slot.
- Pivot the handle in the slot toward the hinge.
- Remove the cover plate or knockout from the side of the fireplace and discard. Remove the semi-perforated piece of insulation covering the opening (insulated fireplaces only).
- Partly open the air kit door and insert the handle into the appropriate hole in the side column of the fireplace. The hinge on the door assembly should be located toward the front of the fireplace. If the hinge and the handle are not positioned in this manner, the door will not function correctly.
- Attach the door assembly to the fireplace using the screws provided.
- Check operation by pulling the handle out to open and pushing it in to close.
- Mark and cut out a 6 1/2 in. (165 mm) hole in the building side for air entry. This hole should allow some framing (two sides) so the 6 in. (152 mm) diameter inlet tube assembly may be fastened properly.
- Assemble flexible duct (not supplied) between the door assembly and the inlet tube assembly. Secure it in position with the supplied wire ties.
- Seal between the wall and the pipe with silicone to prevent moisture penetration and air leaks.
- Seal between the outside air inlet hood and the house with silicone to prevent air infiltration.

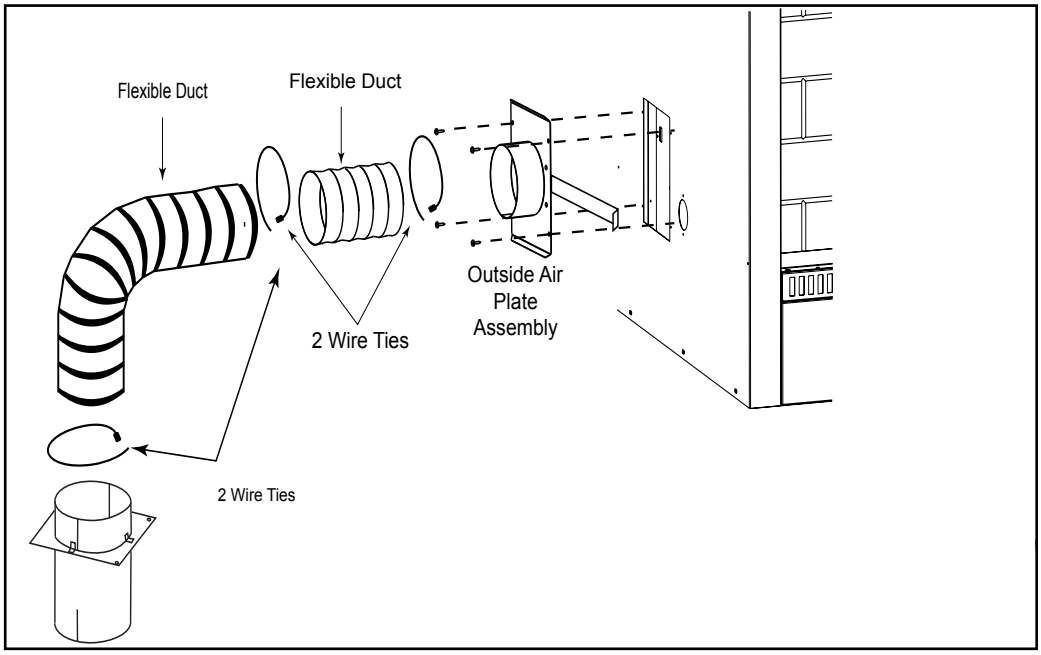

Figure 3.9 Outside Air Installation

4 Chimney and Termination Requirements

A. Chimney Requirements

Vertical distances are measured from the base of the fireplace as shown in Figure 4.1.

Table 4.1 Chimney Requirements

	ft	*meters*
• Minimum overall straight height	14.5	4.42
• Minimum height with offst/return	16	4.88
• Maximum height	90	27.43
• Maximum chimney length bewtween an offset and return	20	6.10
• Maximum distance between chimney stabilizers	35	10.67
• Double offset/return minimum height	20	6.10
• Maximum unsupported chimney length between the offset and return	6	1.83
• Maximum unsupported chimney height above the fireplace	35	10.67
• Maximum unsupported chimney above roof	6	1.83

NOTICE: *A maximum of two pairs of offsets and returns may be used.*

WARNING! Risk of Fire! *You must maintain 2 in. (51 mm) air space clearance to insulation and other combustible materials around the chimney system. Failure to do so may cause overheating and fire.*

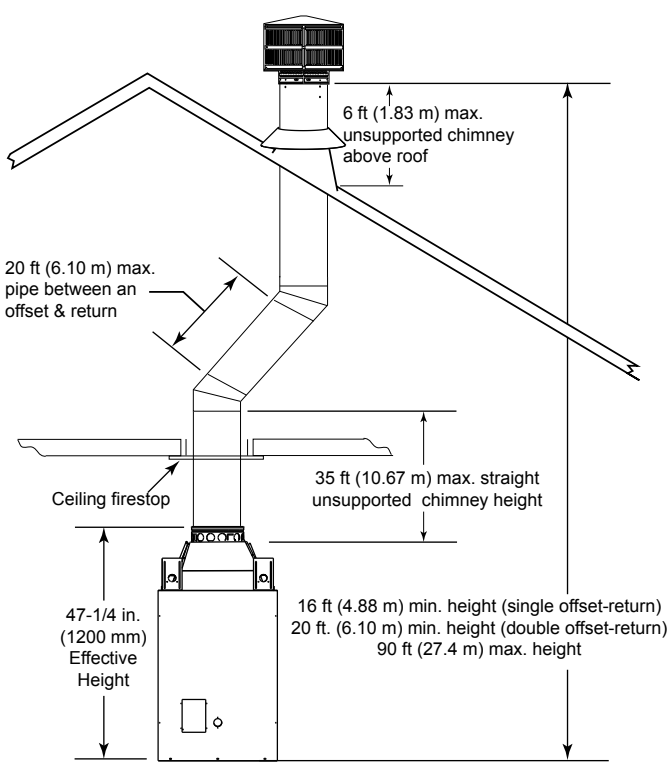

Figure 4.1 Chimney Requirements

NOTICE*: You must provide support for the pipe during construction and check to be sure inadvertent loading has not dislodged the chimney section from the fireplace or at any chimney joint.*

Table 4.2 Chimney Component Dimensions

HEIGHT OF CHIMNEY COMPONENTS		*in.*	*mm*
Chimney Stabilizer			
	SL3	4-3/4	121
Offsets/Returns			
	SL315	13-3/8	340
	SL330	15-1/2	394
Chimney Sections*			
	SL306	4-3/4	121
	SL312	10-3/4	273
	SL318	16-3/4	425
	SL324	22-3/4	578
	SL336	34-3/4	883
	SL348	46-3/4	1187

*** Dimensions reflect effective height.**

B. Offsets/Returns

- Use an offset/return to bypass overhead obstructions.
- An offset and return can be used as a single entity or separated by chimney section(s).

  ***WARNING! Risk of Fire! DO NOT** use offset/returns greater than 30°. Chimney draft will be restricted and could cause overheating and fire. Secure offsets with screws (not to exceed 1/2" / 13 mm in length) Secure returns with strapping. Straight chimney sections may be secured with screws. Keep chimney sections from separating or twisting.*

- Measure the shift needed to avoid the overhead obstruction. Refer to dimension A in Figure 4.2.
- Find the appropriate A dimension listed in Table 4.3. The B dimension coinciding with the A dimension measurement in Table 4.3 represents the required vertical clearance needed to complete the offset/return.
- Read across the chart to find the number of chimney sections/model numbers needed between the offset and return.

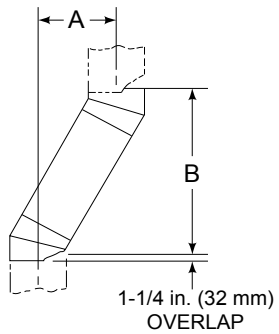

Figure 4.2 Chimney Offset/Return

Example:

Your "A" dimension from Figure 4.2 is 14-1/2 in. (368 mm). Using Table 4.3 the dimension closest to, but not less than 14-1/2 in. (368 mm) is 14-1/2 in. (368 mm) using a 30° offset/return.

You determine from the table that you need 34-1/8 in. (867 mm) (Dimension "B") between the offset and return.

The chimney component that best fits your application is one SL324.

Table 4.3 Offset Dimensions

15-degree				30-degree									
A		B		A		B							
in.	*mm*	*in.*	*mm*	*in.*	*mm*	*in.*	*mm*	SL306	SL312	SL318	SL324	SL336	SL348
1 5/8	41	13 3/8	340	3 5/8	92	15 1/2	394	-	-	-	-	-	-
2 7/8	73	17 3/4	451	5 1/2	140	18 5/8	473	1	-	-	-	-	-
4 1/8	102	22 3/8	568	7 1/4	184	21 3/4	552	2	-	-	-	-	-
4 1/2	114	23 5/8	600	8 1/2	216	23 3/4	603	-	1	-	-	-	-
5 3/4	146	28 1/4	718	10 1/4	260	27	686	1	1	-	-	-	-
6	152	29 3/8	746	11 1/2	292	29	737	-	-	1	-	-	-
7 1/4	184	34	864	13 1/4	337	32 1/8	816	-	2	-	-	-	-
7 3/4	197	36 1/8	918	14 1/2	368	34 1/8	867	-	-	-	1	-	-
8 3/4	222	39 3/4	1010	16 1/4	413	37 3/8	949	1	-	-	1	-	-
10 3/8	264	45 5/8	1159	19 1/4	489	42 1/2	1080	-	-	2	-	-	-
10 5/8	270	46 3/4	1187	20 1/2	521	44 5/8	1133	-	-	-	-	1	-
11 7/8	302	51 3/8	1305	22 1/4	565	47 3/4	1213	1	-	-	-	1	-
13 1/2	243	57 1/4	1454	25 1/4	641	52 7/8	1343	-	-	-	2	-	-
13 3/4	349	58 3/8	1483	26 1/2	673	55	1397	-	-	-	-	-	1
15	381	63	1600	28 1/4	718	58 1/8	1476	1	-	-	-	-	1
16 1/2	419	68 3/4	1746	31 1/4	794	63 1/4	1607	-	1	-	-	-	1
18	457	74 5/8	1895	34 1/4	870	68 1/2	1740	-	-	1	-	-	1
19 5/8	498	80 3/8	2042	37 1/4	946	73 3/4	1873	-	-	-	1	-	1
20 5/8	524	84 1/8	2137	39 1/8	994	76 7/8	1953	1	-	-	1	-	1
22 3/4	578	91 7/8	2334	43 1/4	1099	84 1/8	2137	-	-	-	-	1	1
24	610	96 1/2	2451	45 1/8	1146	87 1/4	2216	1	-	-	-	1	1
25 7/8	657	103 1/2	2629	49 1/4	1251	94 1/2	2400	-	-	-	-	-	2

Proper assembly of air-cooled chimney parts result in an overlap at chimney joints of 1-1/4 in. (32 mm). Effective length is built into this chart.

C. Termination Requirements

- Install a cap approved and listed for this fireplace system.
- Locate cap where it will not become plugged by snow or other materials.
- Locate cap away from trees or other structures.
- The bottom of the termination cap must be at least 3 ft (.91 m) above the roof AND at least 2 ft (.61 m) above any portion of roof within 10 ft (3.05 m).
- The distance required between caps is shown below.

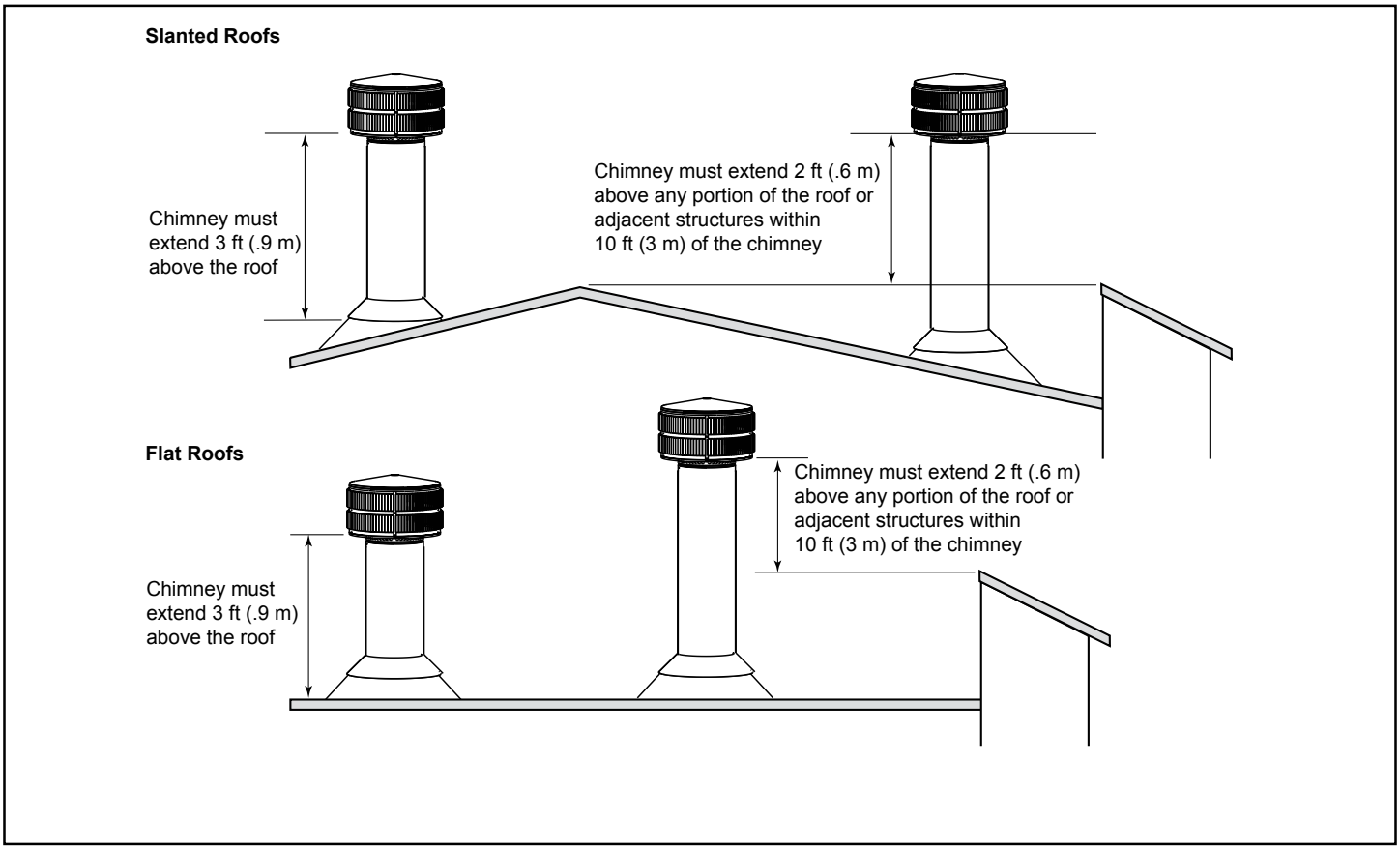

Figure 4.3 Multiple Chimney Locations

5 Chimney Installation

A. Typical Chimney System

NOTICE: *Chimney performance may vary.*

- *Trees, buildings, roof lines and wind conditions affect performance.*
- *Chimney height may need adjustment if smoking or overdraft occurs.*

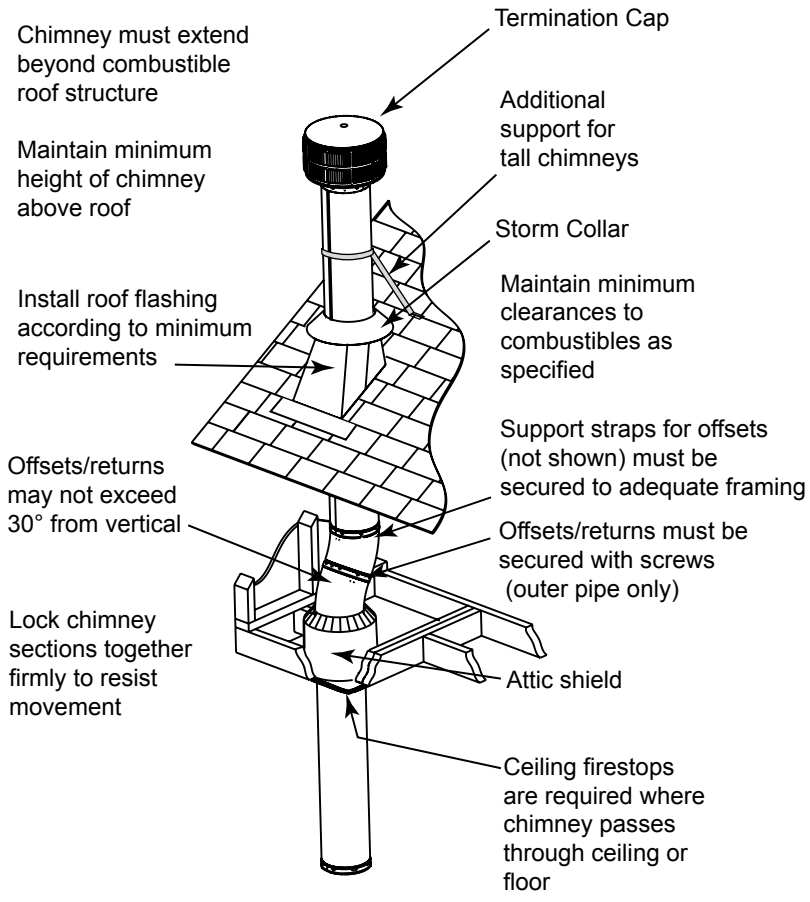

Figure 5.1 Typical Chimney System - Guidelines for Chimney System Installation

B. Assemble Chimney Sections

Use only those components described in this manual.

Substitute or damaged chimney components could impair safe operation and cause overheating and fire.

Attach either a straight chimney section or an offset to the top of the fireplace (depending on your installation requirement). Chimney sections are locked together by pushing downward until the top section meets the stop bead on the lower section.

The inner flue is placed to the inside of the flue section below it. The outer casing is placed outside the outer casing of the chimney section below it. See Figure 5.2.

NOTICE: *Chimney sections cannot be disassembled once locked together. Plan ahead!*

- Lock chimney sections and/or offsets/returns together by pushing downward until the top section meets the stop bead on the lower section.
- Pull on the top section to make sure it is fully engaged and will not separate.
- You may use #6 or #8 sheet metal screws no longer than 1/2 in. (13 mm) to fasten chimney sections together. Do NOT penetrate inner flue.

  WARNING! Risk of Fire! *You MUST use screws (provided) to fasten offset/returns to chimney sections to keep the chimney parts from twisting. Failure to do so could cause fire.*
- Fasten offset/returns to chimney sections. Insert the screws (provided) through the predrilled holes. Do NOT penetrate inner flue.
- Secure chimney returns with hanger straps provided; fasten to studs or joists.
- Vertical straight runs of chimney must be supported every 35 ft (10.7 m).

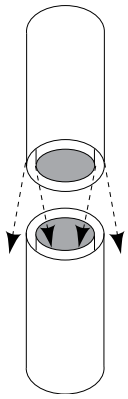

Figure 5.2 Assembling Chimney Sections

WARNING! Risk of Fire! DO NOT *install substitute or damaged chimney components.*

C. Secure Offset/Return

When offsets and returns are joined to straight pipe sections, they must be locked into position with the screws provided* (outer only), using the predrilled holes. To prevent gravity from pulling the chimney sections apart, the returns and the chimney stabilizers have hanger straps for securing these parts to joists or rafters. See Figure 5.3.

* Use # 6 or # 8 sheet metal screw, or larger, no longer than 1/2 in. (13 mm).

WARNING! Risk of Fire!

- *Secure offsets with screws (not to exceed 1/2 in./13 mm In length).*
- *Secure returns with strapping.*
- *Straight chimney sections may be secured with screw (not to exceed 1/2 in./13 mm In length) at the joints.*
- *Keep chimney sections from separating or twisting.*

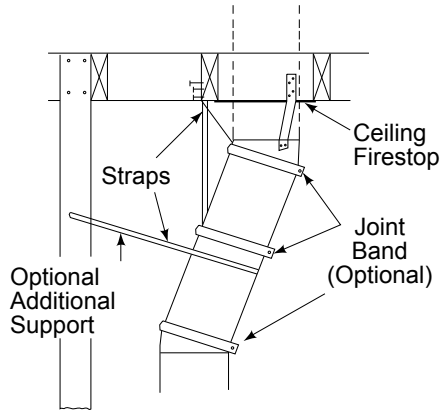

Figure 5.3 Secure the Chimney

D. Install Ceiling Firestops

CAUTION! Risk of Fire! *Ceiling firestops must be used whenever the chimney penetrates a ceiling/floor.*

- *The ceiling firestop slows spread of fire and reduces cold air infiltration.*

- Install a ceiling firestop whenever chimney penetrates ceiling/floor.
- Mark and cut an opening in ceiling as shown in Figure 5.4.
- Frame the opening with the same size lumber used in the ceiling joists.
- Nail the ceiling firestop to the bottom of the ceiling joists when there is a room above.
- Use an attic insulation shield if the ceiling is insulated. The ceiling firestop may then be attached above or below the joists.

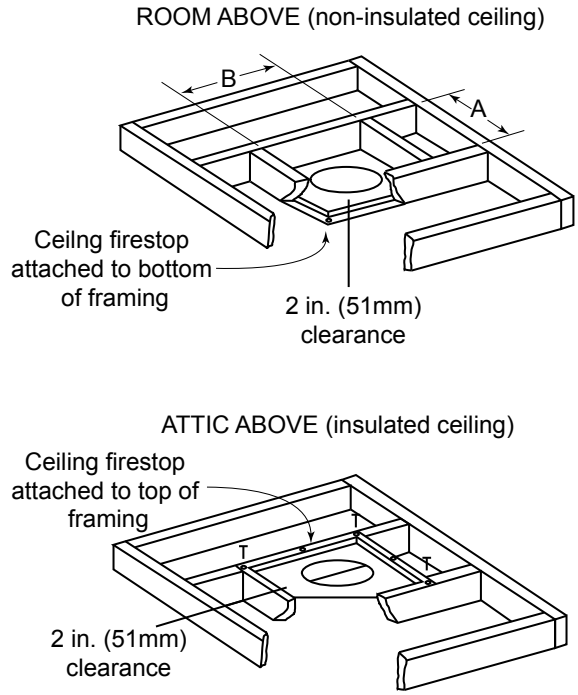

Note: Use same dimensional lumber for framing ceiling firestop and joists.

	A		B	
Catalog #	*in.*	*mm*	*in.*	*mm*
FS338	14-1/2	368	14-1/2	368
FS339	14-1/2	368	18-3/8	467
FS340	14-1/2	368	23	584

Figure 5.4 Installing the Ceiling Firestop

WARNING! Risk of Fire! DO NOT *seal area between firestop opening and chimney pipe except where they enter the attic or leave the warm air envelope of the home (use 600° F sealant).*

E. Install Attic Insulation Shield

WARNING! Risk of Fire! *You MUST install an attic insulation shield when there is any possibility of insulation or other combustible material coming into contact with the chimney.*

- ***DO NOT*** *pack insulation between the chimney and the attic insulation shield.*
- *Failure to keep insulation and other materials away from chimney pipe could cause fire.*
- ***DO NOT*** *offset chimney inside insulation shield.*

Installation of a ceiling firestop is required:

- Refer to Figures 5.5, 5.6, 5.7.
- If the attic shield is pre-rolled continue. If it is a flat part, try and roll it up to aid in wrapping it around the chimney.
- Pre-bend all the tabs in at the top to 45°.
- Wrap the shield (around the chimney if already installed) until you have an overlap and the three holes on each side match up (large holes on top).
- Insert three screws into the matching holes to form a tube starting at the bottom.
- Bend the tabs on the bottom of the tube inward to 90° to maintain chimney air space.
- Rest the insulation shield on the ceiling firestop below.
- Tape off any opening around the bottom.

If you wish to make a custom shield or barrier, follow these guidelines:

- Metal is preferred, although any material stiff enough to hold back the insulation can be used.

  WARNING! Risk of Fire! *Use of cardboard or other materials that can deflect under humidity or other environmental conditions is not recommended.*
- The shield or barrier must be tall enough to extend above the insulation and prevent blown-in insulation from spilling into the cavity.
- Maintain specified air spaces around chimney.
- Check instructions and local codes for further details.

Double-check the Chimney Assembly

Continue assembling the chimney sections up through the ceiling firestops as needed. While doing so, be aware of the height and unsupported chimney length limitations given under Section 5.

Check each section by pulling up slightly from the top to ensure proper engagement before installing the succeeding sections. If they have been connected correctly, they will not disengage when tested.

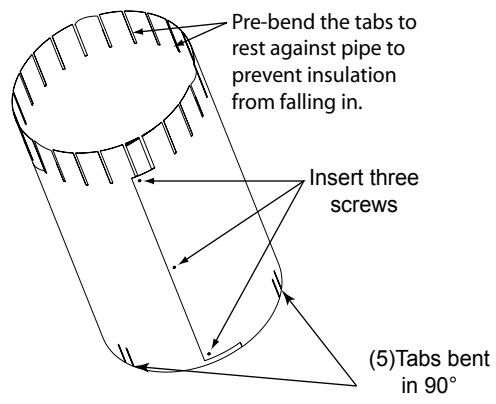

Figure 5.5 Prepare Attic Insulation Shield

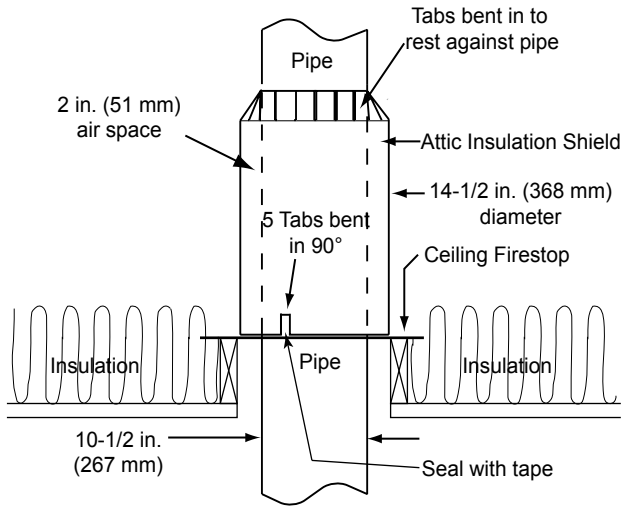

Figure 5.6 Install Attic Insulation Shield (firestop above ceiling)

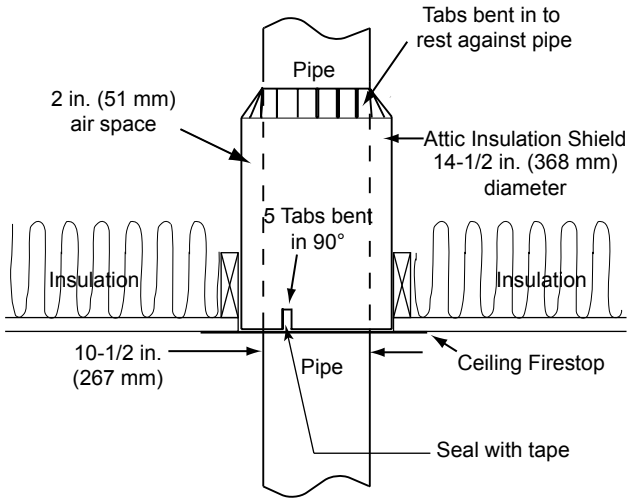

Figure 5.7 Install Attic Insulation Shield (firestop below ceiling)

F. Roof Penetration

- Refer to Figure 5.8.
- Plumb from roof to center of chimney.
- Drive a nail up through roof to mark center of pipe.
- Measure to either side of nail and mark the 14-1/2 in. x 14-1/2 in. (368 mm x 368 mm) opening required.
- Measure opening on the horizontal; actual length may be larger depending on roof pitch.
- Cut out and frame opening.
- Refer to **Chapter 25** of the **Uniform Building Code** for roof framing details.

Install Flashing

- Assemble chimney so it passes through the framed opening.
- Slip the flashing over the chimney.

NOTICE: *Roofing shingles must be below the flashing plate on the lower side of a sloped roof and over the flashing plate on the sides and top.*

- Nail the flashing to the roof. Keep gaps between the flashing plate and the roof to a minimum.
- Caulk the flashing plate and roof junction as well as the vertical seam on the flashing. All nail heads must be caulked with a roofing sealant.
- Caulk the overlap seam of any exposed pipe sections that are located above the roof line to prevent leaks.

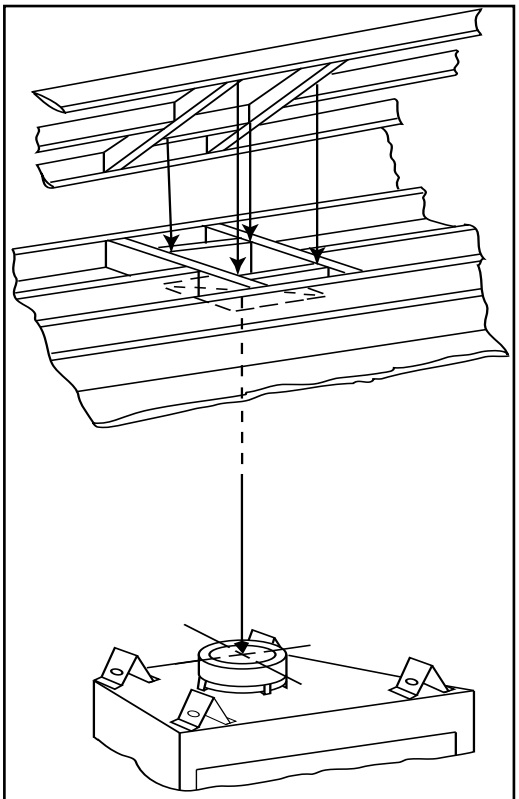

Figure 5.8 Ceiling/Attic Construction

G. Install MH842 Ceiling/Roof Thimble

WARNING! Risk of Fire! *You MUST maintain 2 in. (51 mm) air space to insulation and other combustible materials around the chimney system. Failure to do so could cause overheating and fire.*

- The thimble must extend completely through the roof structure shielding combustible materials. Five location holes have been provided to allow for a variety of ceiling/roof thicknesses. The thimble extension is required when the ceiling/roof thickness exceeds 12 1/2 in. The extension should overlap the thimble 1 in.
- Drill 1/8 in. holes through the outer shield of the thimble using the predrilled holes in the extension as guides. Attach the extension to the thimble using the screws provided with the extension.
- Install the thimble assembly and nail it securely to the framing members.
- Center the flashing over the chimney and nail it to the roof. Keep gaps between the flashing plate and the roof to a minimum.
- Caulk the flashing plate and roof junction as well as the vertical seam on the flashing. All nail heads must be caulked with a roofing sealant.
- Finish assembling the chimney, storm collar and termination cap following the installation instructions provided with them.
- Refer to **Chapter 25** of the **Uniform Building Code** for roof framing details.

  NOTE: *Roofing shingles must be below the flashing plate on the lower side of a sloped roof and over the flashing plate on the sides and top.*

H. Termination Cap Requirements

- Install a cap approved and listed for this fireplace system.
- Locate cap where it will not become plugged by snow or other materials.
- Locate cap away from trees or other structures.
- The bottom of the termination cap must be at least 3 ft (.91 m) above the roof AND at least 2 ft (.61 m) above any portion of roof within 10 ft (3.05 m).

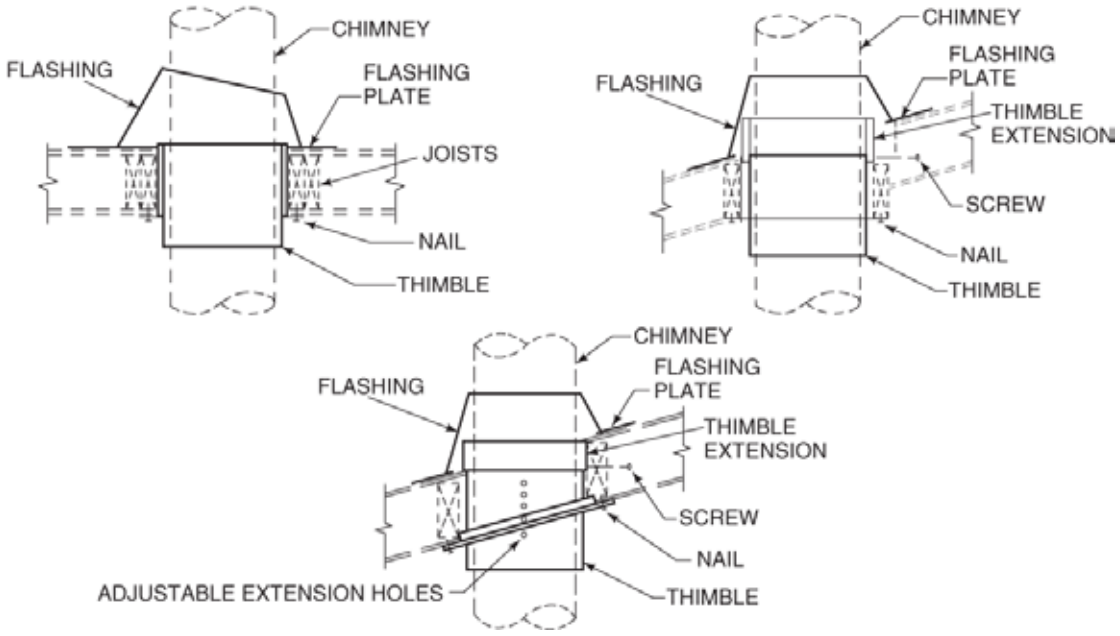

Figure 5.9 MH842 Installation

6 Finishing

A. Finishing Material

Refer to Sections 1.B. and Sections 1.C. for combustible/non-combustible materials. Refer to Figure 7.1 for non-combustible zone.

WARNING! Risk of Fire! *You must maintain clearances.*

- *Do NOT cover metal fireplace front with combustible materials.*
- *Install combustible materials only to specified clearances on top front and side edges.*

- Complete framing and apply facing material (drywall) over framing.
- A bead of 300-deg F minimum non-combustible sealant must be used to close off any gaps at the top and sides between the fireplace and facing to prevent cold air leaks.
- Large gaps can be bridged with fiberglass rope gasket.
- Only non-combustible materials may be used to cover the metal fireplace front.

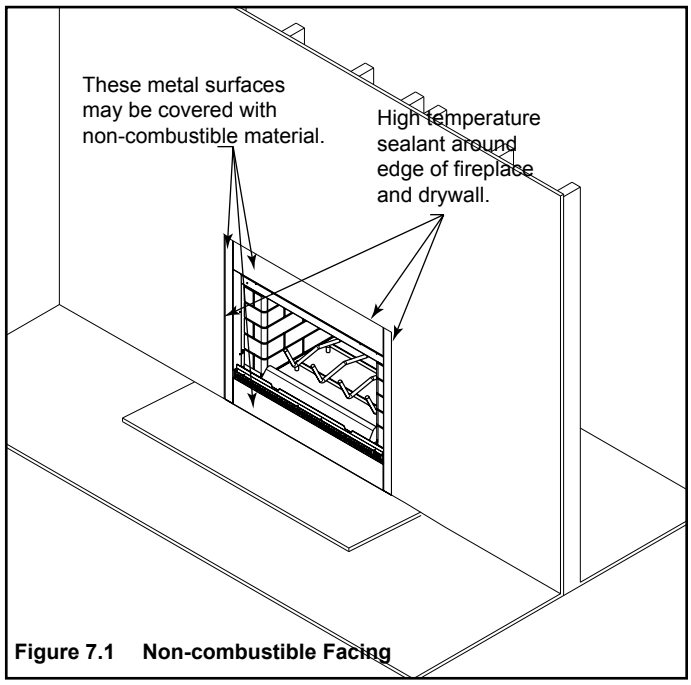

Figure 7.1 Non-combustible Facing

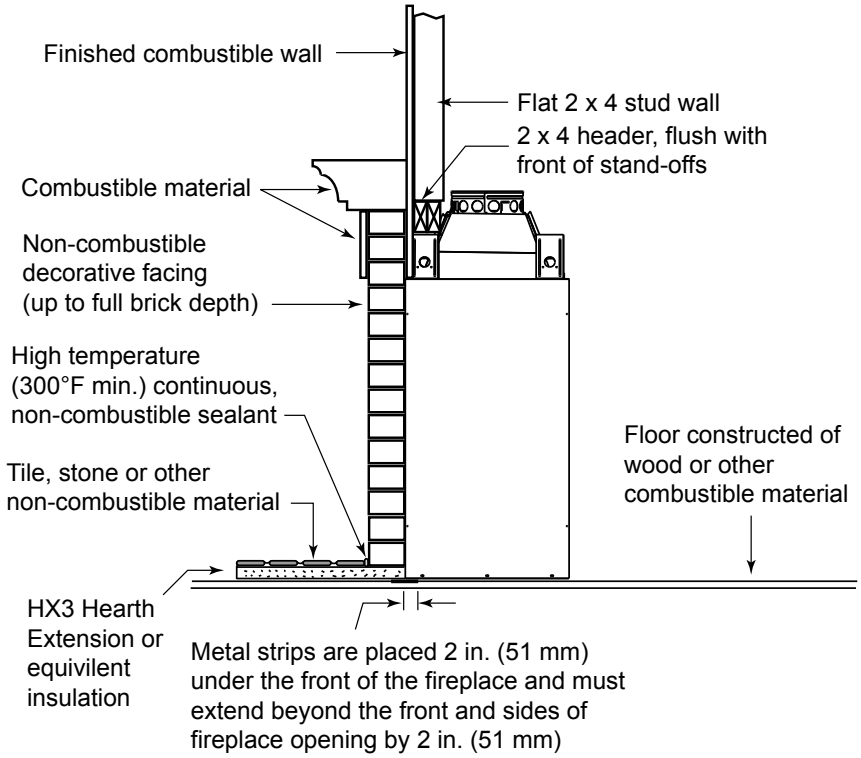

Figure 7.2 Decorative Facing

B. Hearth Extension, Building and Finishing

WARNING! Risk of Fire! *High temperatures, sparks, embers or other burning material falling from the fireplace may ignite flooring or concealed combustible surfaces.*

- *Protective metal hearth strips MUST be installed.*
- *Hearth extensions MUST be installed exactly as specified.*

A hearth extension must be installed with all fireplaces to protect the combustible floor in front of the fireplace from both radiant heat and sparks.

- You MUST use a hearth extension with this fireplace.
- Refer to Figure 7.3 for minimum dimensions.
- This fireplace has been tested and approved for use with a hearth extension insulated to a minimum R value of 1.03.
- The hearth extension material MUST be covered with tile, stone or other non-combustible material.
- Manufactured hearth materials will usually have a published **R value** (resistance to heat) or **k value** (conductivity of heat). Refer to the formula in Table 7.1 to convert a k value to an R value,
- Refer to Table 7.2 for hearth extension insulation alternatives.

WARNING! Risk of Fire!

Hearth & Home Technologies is not responsible for discoloration, cracking or other material failures of finishing materials due to heat exposure or smoke.

- *Choose finishing materials carefully.*

WARNING! Risk of Fire!

- *Maintain clearances.*
- *Use only non-combustible material below standoffs, material such as cement board is acceptable.*
- *Framing or finishing material used on the front of the fireplace closer than the minimums listed, must be constructed entirely of non-combustible materials (i.e., steel studs, concrete board, etc.).*

WARNING! Risk of Fire!

Hearth extensions are to be installed only as illustrated to prevent high temperatures from occurring on concealed combustible materials.

Table 7.1

R = 1/k x inches of thickness

Table 7.2

Hearth Extension Insulation Alternatives, R Value = 1.03			
Material	**k per inch thick**	**r per inch thick**	**Minimum thickness required**
Hearth & Home HX3, HX4	0.49	2.06	1/2 in.
USG Micore 300™	0.49	2.06	1/2 in.
USG Durock™ Cement Board	1.92	0.52	2 in.
Cement Mortar	5.0	0.20	5 1/8 in.
Common Brick	5.0	0.20	5 1/8 in.
Ceramic Tile	12.50	0.08	12 1/4 in.
Armstrong™ Privacy Guard Plus	0.46	2.18	1/2 in.
Marble	14.3-20.0	0.07-0.05	14 5/8 in. - 20 3/8 in.

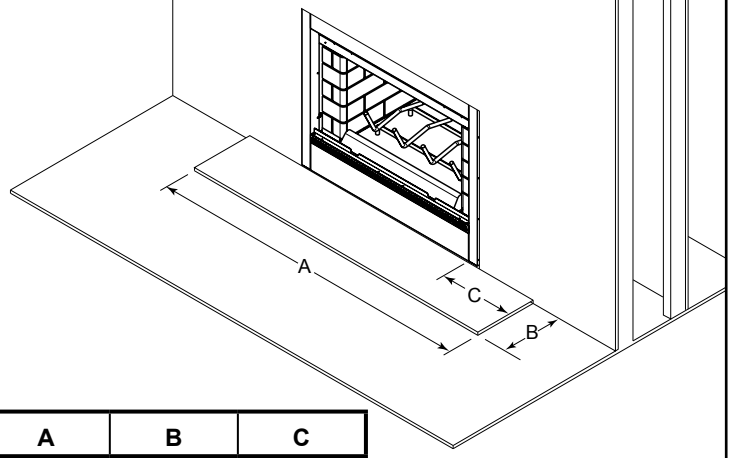

CAT. #		A	B	C
HX3	*in*	52	16	8
	mm	1321	406	204

Figure 7.3 Hearth Extension Dimensions

1. Fireplace Installed Flush on the Floor and Hearth Extension Raised to Bottom of Firebox Opening

Non-combustible flooring a minimum of 16 in. (406 mm) in front of and 8 in. (203 mm) to each side of the fuel opening is required.

The hearth framing must be constructed of non-combustible materials (such as metal framing or equivalent material) and placed on HX3(s), HX4(s), or equivalent material. See Figures 7.4 and 7.5.

When creating the platform, allow for the thickness of the non-combustible finishing materials.

Seal gaps between the hearth extension and the front of the fireplace with a bead of non-combustible sealant or grout.

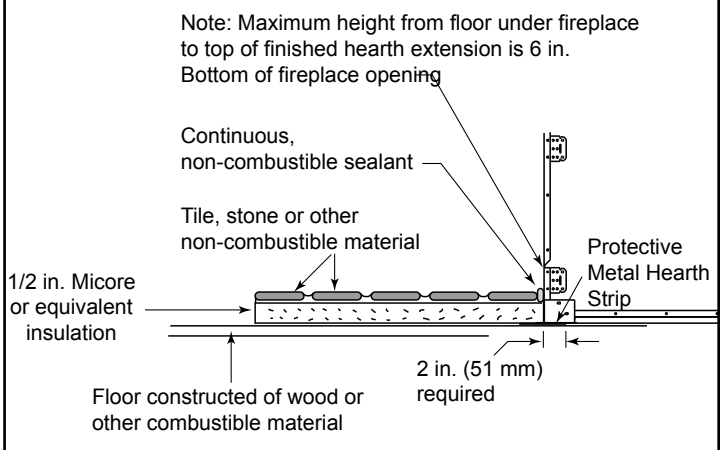

Figure 7.4 Hearth Extension Construction

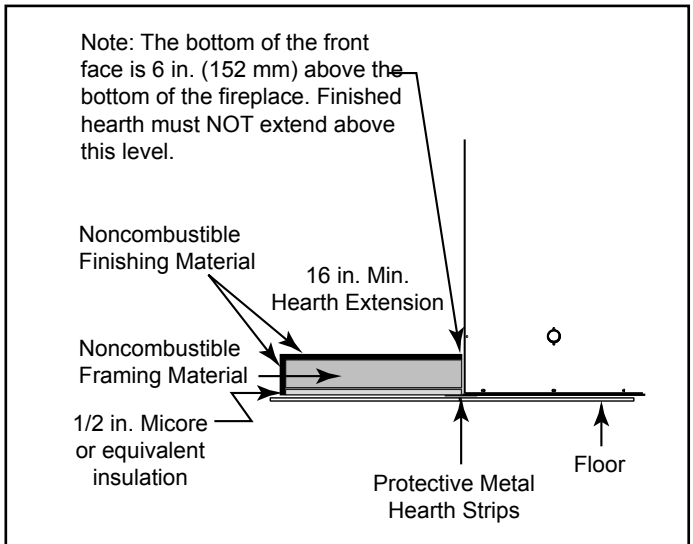

Figure 7.5 Raised Platform Hearth Extension Detail

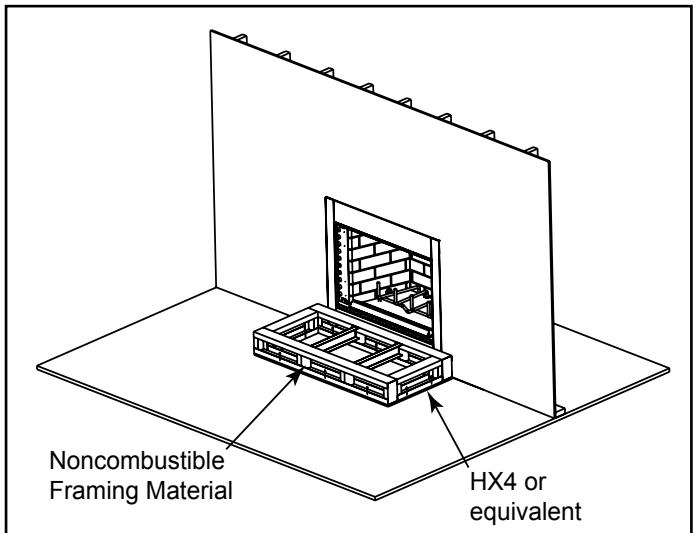

Figure 7.6 Raised Platform Hearth Extension-Framing

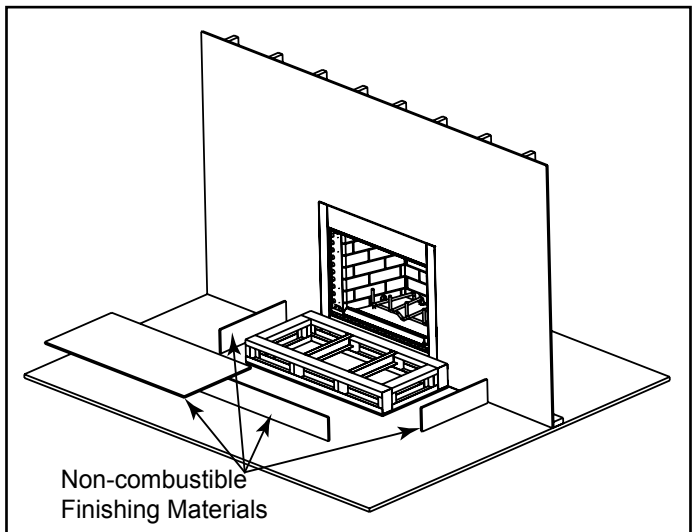

Figure 7.7 Raised Platform Hearth Extension-Finishing

2. Raised Hearth Extension and Raised Fireplace

Non-combustible flooring a minimum of 16 in. (406 mm) in front of and 8 in. (203 mm) to each side of the fuel opening is required.

The hearth framing must be constructed of non-combustible materials (such as metal framing or equivalent material) and placed on HX3(s), HX4(s), or equivalent material. See Figure 7.8.

When creating the platform, allow for the thickness of the non-combustible finishing materials.

Seal gaps between the hearth extension and the front of the fireplace with a bead of non-combustible sealant or grout.

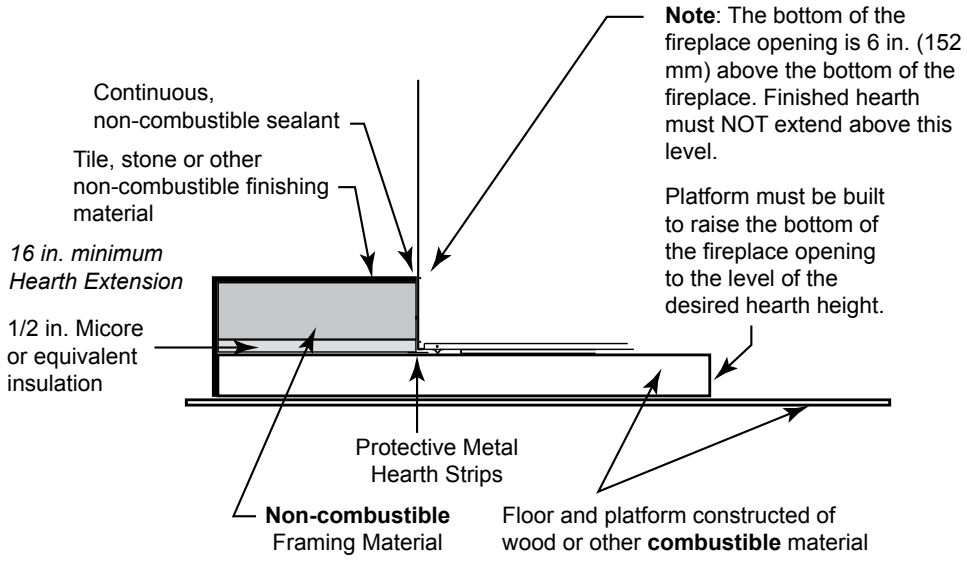

Figure 7.8 Raised Hearth Extension and Fireplace Framing Materials

C. Non-Combustible Sealant Material

After completing the framing and applying the facing materials over the framing, a bead of noncombustible sealant must be used to close off any gaps at the top and sides between the fireplace and hearth.

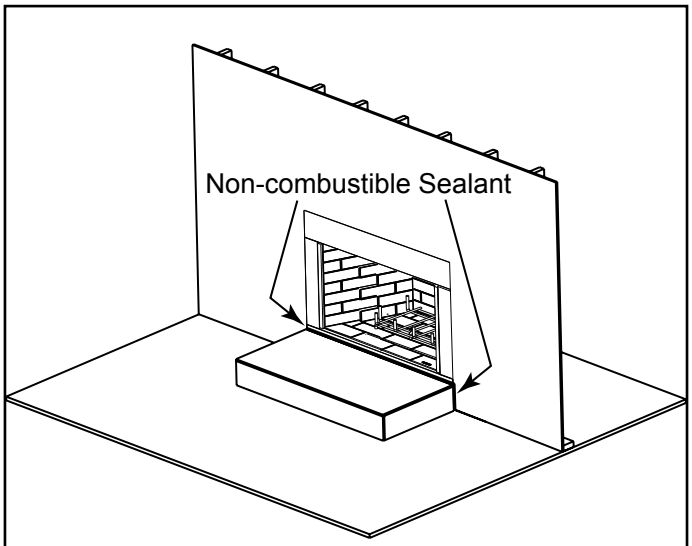

Figure 7.9 Place Non-combustible Sealant

WARNING! Risk of Fire!

Hearth & Home Technologies is not responsible for discoloration, cracking or other material failures of finishing materials due to heat exposure or smoke.

- *Choose finishing materials carefully.*

D. Mantel and Wall Projections

A combustible mantel may be positioned no lower than 40 3/8 in. (1026 mm) from the base of the fireplace.

The combustible mantel may have a maximum depth of 12 in. (305 mm). Combustible trim pieces that project no more than 1 1/2 in. (38 mm) from the face of the fireplace can be placed no closer than 6 in. (152 mm) from the top or side of the decorative front. Combustible trim must not cover:

- the metal surfaces of the fireplace
- where the non-combustible board is placed over the metal surfaces
- the space between the metal face of the fireplace and framing members

WARNING! Risk of Fire!

- *You must seal around the finishing material to fireplace.*

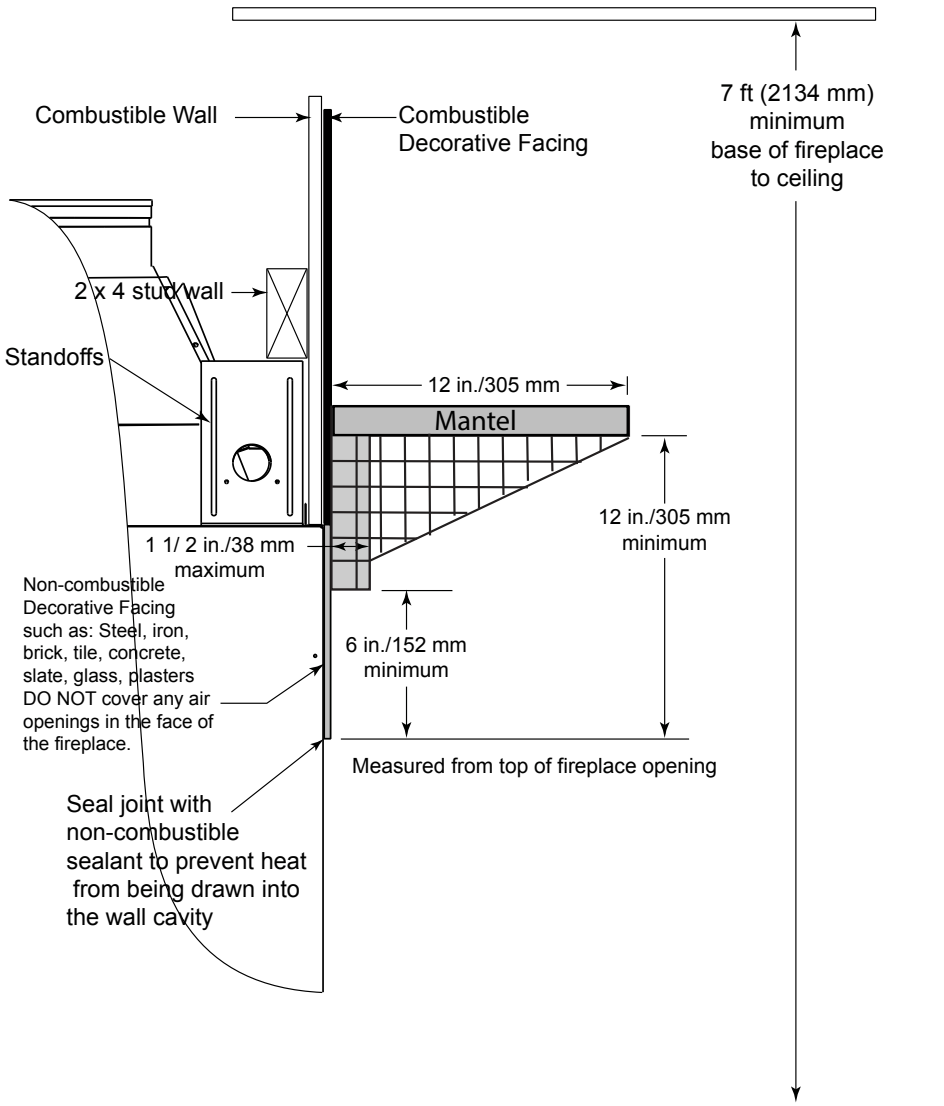

► **Figure 7.10 Mantel Specifications**

E. Sidewalls/Surrounds

- Locate adjacent combustible sidewalls a minimum of 12 in. (305 mm) from fireplace opening.
- Mantle leg, surround, stub wall, whether combustible or non-combustible, may be constructed as shown in Figure 7.11.

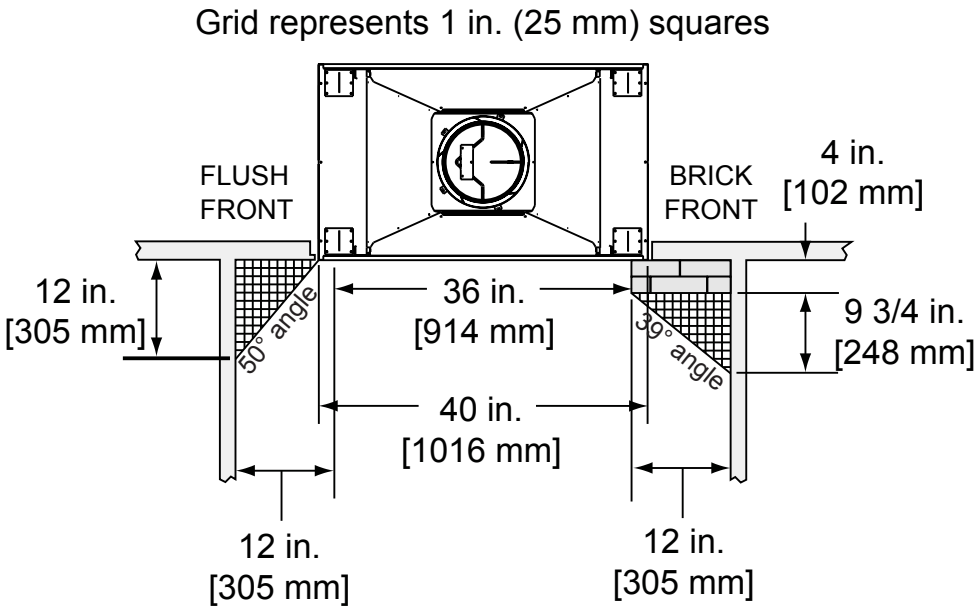

Figure 7.11 Mantel Leg, Surround or Wall Projection (acceptable on both sides of opening)

7 Fireplace Setup

A. Gas Log/Lighter Provision

WARNING! Fire and/or Asphyxiation Risk! *Use with solid wood fuel or decorative gas appliance only. Gas fire generates fumes.*

- ***DO NOT*** *install unvented gas logs*
- *Damper must be locked fully open when gas logs are installed*

A certified gas log lighter or decorative gas log set can be installed in this fireplace.

- Maximum input is 100,000 BTU/hr.
- Decorative gas appliance must be certified to **ANSI Z21.60** "Standard for Decorative Gas Appliances for Installation in Vented Fireplaces".
- Must be installed in accordance with the **National Fuel Gas Code, ANSI Z223.1.**
- A gas log set must incorporate a gas shutoff.
- Gas Log set requires the damper to be locked fully open.
- A listed automatic damper system with safety interlock may be used in this fireplace with only compatible, listed gas log sets. See damper system manufacturer's instructions.
- Knockouts are provided on both sides of the fireplace and in refractories for 1/2 in. (13 mm) iron pipe.
- Seal refractory around pipe with fireplace mortar or a non-combustible sealant.

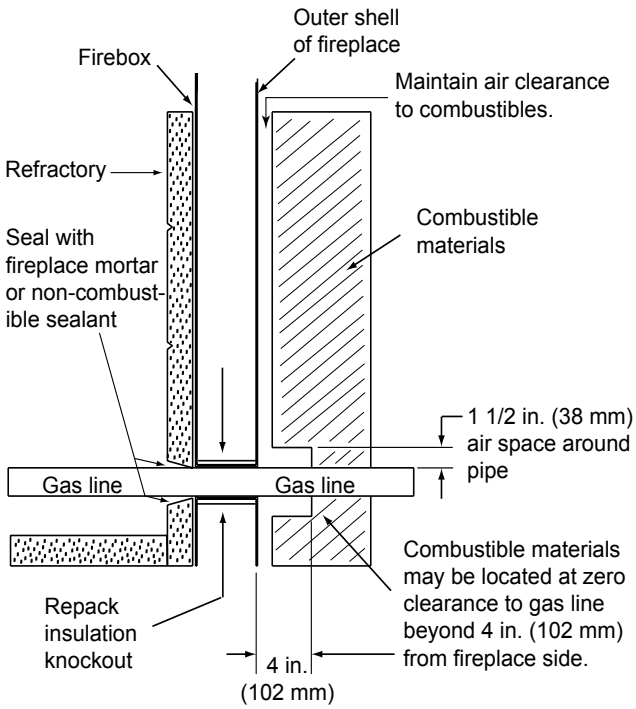

Figure 8.1 Gas Line Installation

8 Reference Materials

A. Chimney Components

Catalog #	Description
CAK4A	Chimney Air Kit
ID4/ID6	Insulated Duct/Outside Air
UD4/UD6	Uninsulated Duct/Outside Air
SL306	Chimney Section - 6 in. (152 mm) long
SL312	Chimney Section - 12 in. (305 mm) long
SL318	Chimney Section - 18 in. (457 mm) long
SL324	Chimney Section - 24 in. (610 mm) long
SL336	Chimney Section - 36 in. (914 mm) long
SL348	Chimney Section - 48 in. (1219 mm) long
SL3	Chimney Stabilizer
SL315	Chimney Offset/Return - 15 deg
SL330	Chimney Offset/Return - 30 deg
FS338	Ceiling Firestop - Straight
FS339	Ceiling Firestop - 15 deg
FS340	Ceiling Firestop - 30 deg
JB877	Chimney Joint Band
CB876	Chimney Bracket
RF370	Roof Flashing - Flat to 6/12 Pitch
RF371	Roof Flashing - 6/12 to 12/12 Pitch
TR344	Round Termination Cap
MH841	Manufactured Housing 20 in. Thimble Extension
12966A	Manufactured Housing Thimble

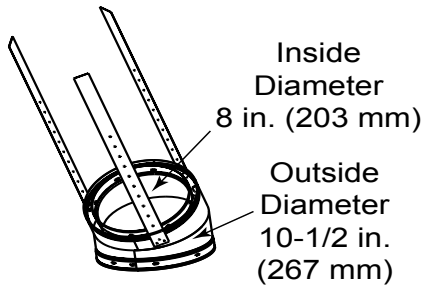

►**SL315 Chimney Offset/Return - Effective Height 13-3/8in. (380 mm)**
SL330 Chimney Offset/Return - Effective Height 15-1/2in. (394 mm)

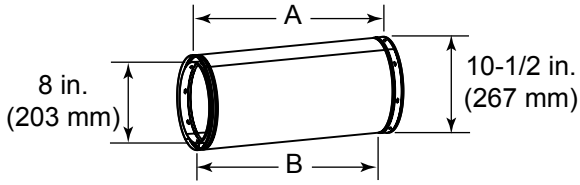

Chimney Sections

Catalog #	A		B	
	in	mm	in	mm
SL306	6	152	4-3/4	121
SL312	12	305	10-3/4	273
SL318	18	457	16-3/4	425
SL324	24	610	22-3/4	578
SL336	36	914	34-3/4	883
SL348	48	1219	46-3/4	1187

A = Actual Length
B = Effective Length (length of chimney part after it has been snapped to another)

ID4 Insulated Duct 4 in. (102 mm) i.d.

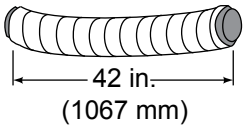

ID6 Insulated Duct 6 in. (152 mm) i.d.

UD4/6 Uninsulated Duct

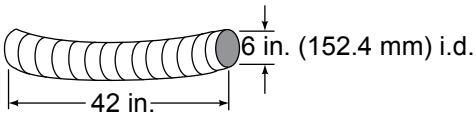

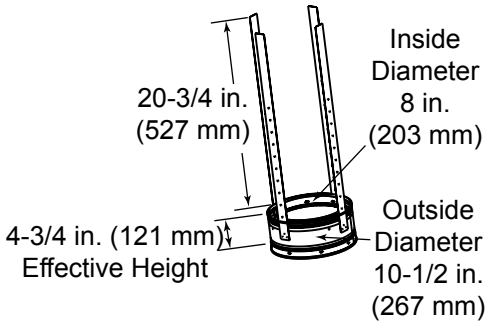

SL3 Chimney Stabilizer

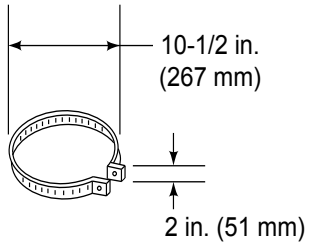

JB877 Chimney Joint Band

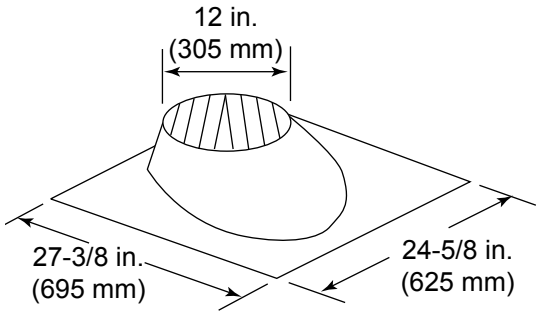

RF370 Roof Flashing

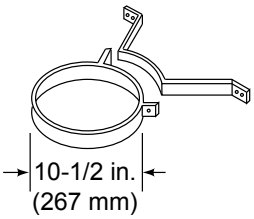

CB876 Chimney Joint Band

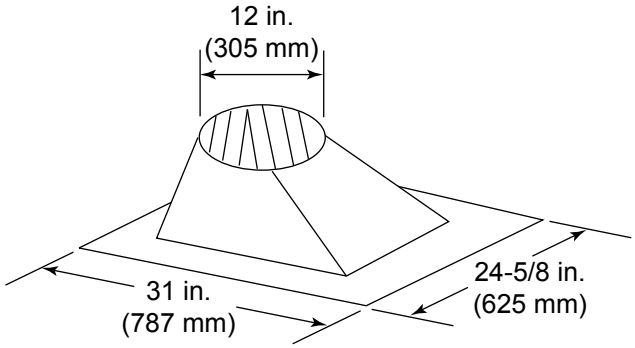

RF371 Roof Flashing

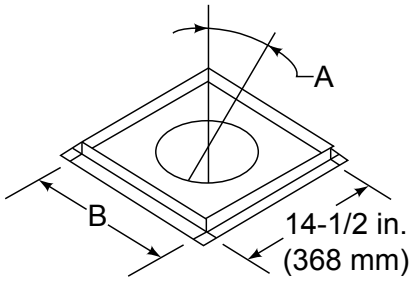

Ceiling Firestop

Catalog #	A	B	
FS338	0-deg.	14-1/2 in.	368 mm
FS339	15-deg.	18-3/8 in.	467 mm
FS340	30-deg.	23 in.	584 mm

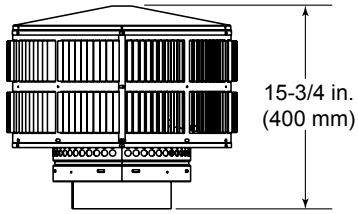

TR344 Round Termination Cap

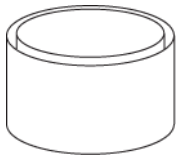

MH841

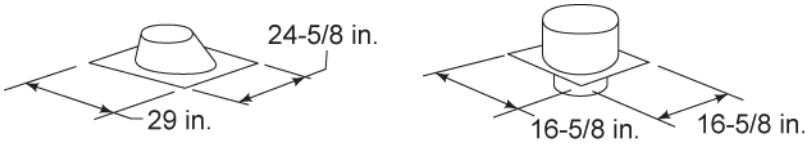

MH842 Roof Thimble & Flashing

B. Optional Components

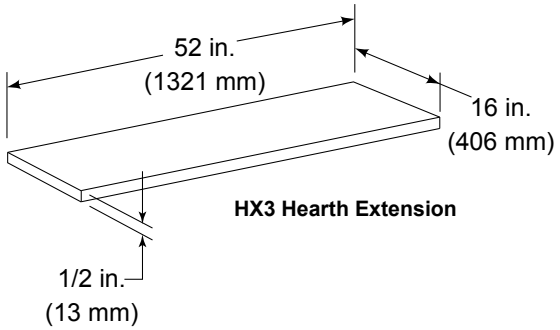

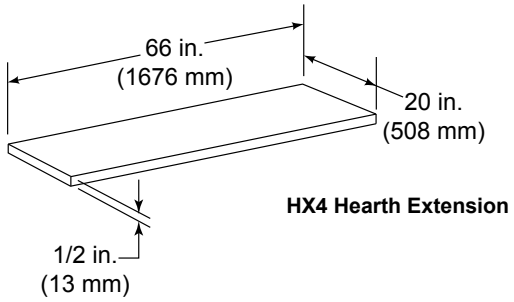

Heatilator, a brand of Hearth & Home Technologies
7571 215th Street West, Lakeville, MN 55044
www.heatilator.com

Please contact your Heatilator dealer with any questions or concerns.
For the location of your nearest Heatilator dealer, please visit www.heatilator.com.