Owner's Manual

Operation and Maintenance

***CAUTION! Risk of Fire! DO NOT** store instruction manuals inside fireplace cavity. High temperatures could cause a fire.*

INSTALLER: Leave this manual with the appliance, not inside the appliance.
CONSUMER: Retain this manual for future reference. Do not store inside the appliance.
Contact your dealer with questions regarding installation, operation or service.

***NOTICE: DO NOT** discard this manual!*

HEAT&GLO

No one builds a better fire

GAS-FIRED

c UL US

LISTED

Models:

PRIMO-II-48
PRIMO-II-48ST
PRIMO-II-60
PRIMO-II-60ST
PRIMO-II-72
PRIMO-II-72ST

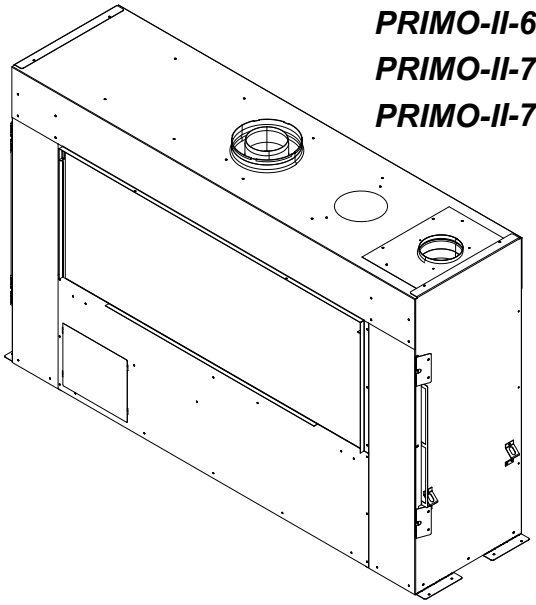

This appliance may be installed as an OEM installation in manufactured home (USA only) or mobile home and must be installed in accordance with the manufacturer's instructions and the *Manufactured Home Construction and Safety Standard, Title 24 CFR, Part 3280* in the United States, or the *Standard for Installation in Mobile Homes, CAN/CSA Z240 MH Series,* in Canada.

This appliance is only for use with the type(s) of gas indicated on the rating plate. This appliance is not convertible for use with other gases, unless a certified kit is used.

Pour demander un exemplaire en français de ce Manuel, visitez www.heatnglo.com.

⚠ WARNING:
FIRE OR EXPLOSION HAZARD
Failure to follow safety warnings exactly could result in serious injury, death, or property damage.

- **DO NOT** store or use gasoline or other flammable vapors and liquids in the vicinity of this or any other appliance.
- **What to do if you smell gas**
  - **DO NOT** try to light any appliance.
  - **DO NOT** touch any electrical switch. **DO NOT** use any phone in your building.
  - Leave the building immediately.
  - Immediately call your gas supplier from a neighbor's phone. Follow the gas supplier's instructions.
  - If you cannot reach your gas supplier, call the fire department.
- Installation and service must be performed by a qualified installer, service agency, or the gas supplier.

⚠ DANGER

HOT GLASS WILL CAUSE BURNS.

DO NOT TOUCH GLASS UNTIL COOLED.

NEVER ALLOW CHILDREN TO TOUCH GLASS.

A (glass) barrier designed to reduce the risk of burns from the hot viewing glass is provided with this appliance and must be installed for the protection of children and other at-risk individuals.

SafeSurface™ barrier glass must be ordered separately at time of appliance purchase. See Section 12.B of appliance Installation Manual.

1 Welcome

Read this manual before operating this appliance.
Please retain this Owner's Manual for future reference.
Read the Installation Manual before making any installation or finishing changes.

A. Congratulations

Congratulations on selecting a Heat & Glo gas fireplace, an elegant and clean alternative to wood burning fireplaces. The Heat & Glo gas fireplace you have selected is designed to provide the utmost in safety, reliability, and efficiency.

As the owner of a new fireplace, you'll want to read and carefully follow all of the instructions contained in this owner's manual. Pay special attention to all cautions and warnings.

This owner's manual should be retained for future reference. We suggest that you keep it with your other important documents and product manuals.

The information contained in this owner's manual, unless noted otherwise, applies to all models and gas control systems.

Your new Heat & Glo gas fireplace will give you years of durable use and trouble-free enjoyment. Welcome to the Heat & Glo family of fireplace products!

Local Dealer Information

DEALER: *Fill in your name, address, phone and email information here and appliance information below.*

Dealer Name: _____

Address: _____

_____

Phone: _____

Email: _____

Appliance Information:

Brand: _____ Model Name: _____

Serial Number: _____ Date Installed: _____

Listing Label Information/Location

The model information regarding your specific fireplace can be found on the rating plate usually located in the control area of the fireplace.

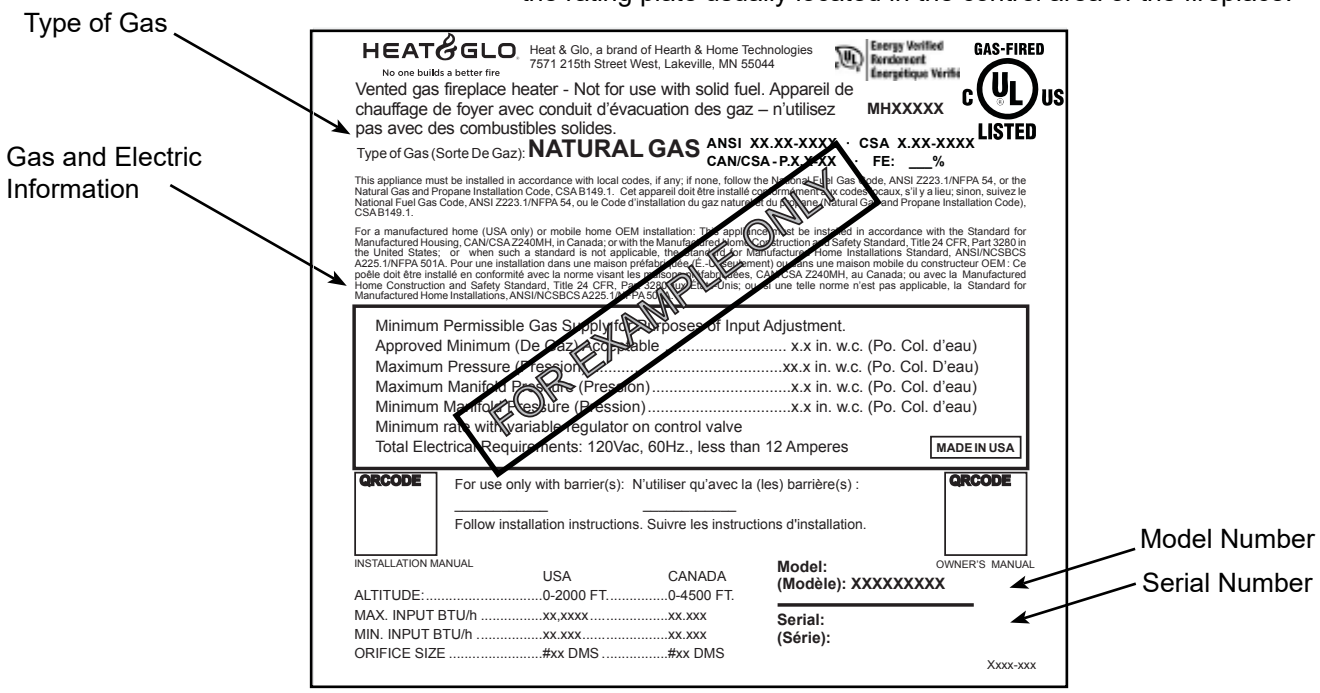

⚠ Safety Alert Key:

- ***DANGER!*** *Indicates a hazardous situation which, if not avoided will result in death or serious injury.*
- ***WARNING!*** *Indicates a hazardous situation which, if not avoided could result in death or serious injury.*
- ***CAUTION!*** *Indicates a hazardous situation which, if not avoided, could result in minor or moderate injury.*
- ***NOTICE:*** *Used to address practices not related to personal injury.*

Note: *The term "recommend" or "recommended" does not indicate a requirement. It is a best practice suggested by Hearth & Home Technologies®.*

Table of Contents

1 Welcome

A. Congratulations 2
B. Limited Warranty 4

2 Product Specific Information

A. Appliance Certification 6
B. Glass Specifications 6
C. BTU Specifications 6
D. Electronic Control Module Compliance 7

3 Important Safety and Operating Information

A. Appliance Safety 8
B. General Operating Parts 9
C. Fuel Specifications 9
D. Wall and Mantel Temperatures 9
E. Good Faith Wall Surface/TV Guidelines 9
F. Lighting Instructions (IPI) 10
G. Appliance Break-In 11
H. Heat Management 11
I. Detailed Component Operating Instructions 12

4 Maintenance and Service

A. Maintenance: Frequency and Tasks 14
B. Maintenance Tasks - Homeowner 14
C. Maintenance Tasks - Qualified Service Technician 15

5 Frequently Asked Questions and Troubleshooting

A. Frequently Asked Questions - Appliance 26
B. Frequently Asked Questions - IntelliFire Touch® Controls (IFT2-RC450) 27
C. Troubleshooting - IntelliFire Touch 2.0 Ignition System . . 28
D. Troubleshooting - Appliance 30

6 Reference Materials

A. Accessories 31
➔ B. Service Parts 32
C. Contact Information 42

➔ = Contains updated information.

B. Limited Warranty

Hearth & Home Technologies LLC

LIMITED WARRANTY

Hearth & Home Technologies LLC ("HHT") extends the following warranty for HHT gas, wood, pellet and electric hearth appliances (each a "Product" and collectively, the "Product(s)") and certain component parts set forth in the table below ("Component Part(s)") that are purchased from a HHT authorized dealer or distributor.

WARRANTY COVERAGE:

HHT warrants that the Products and their Component Parts will be free from defects in materials and workmanship for the applicable period of Warranty coverage set forth in the table below ("Warranty Period"). If a Product or Component Parts are found to be defective in materials or workmanship during the applicable Warranty Period, HHT will, at our discretion, repair the applicable Component Part(s), replace the applicable Component Part(s), or refund the purchase price of the applicable Product(s). The maximum amount recoverable under this Warranty is limited to the purchase price of the Product. This Warranty is transferable from the original purchaser to subsequent owners, but the Warranty Period will not be extended in duration or expanded in coverage for any such transfer. This Warranty is subject to conditions, exclusions, and limitations as described below.

WARRANTY PERIOD:

Warranty coverage begins at the date of installation. In the case of new home constructions, Warranty coverage begins six months after invoice of the final sale of the Product(s) by an independent, authorized HHT dealer or distributor. However, the Warranty coverage shall commence no later than 24 months following the date of Product shipment from HHT, regardless of the installation or purchase date.

Warranty Period		HHT Manufactured Appliances and Venting				
Component Parts	Labor	Gas	Pellet	Wood	Electric	Component Parts Covered by this Warranty
1 Year		X	X	X		All parts including handles, external enameled components and other material except as covered by Warranty Conditions, Warranty Exclusions, and Warranty Limitations listed
2 Years					X	All parts except as covered by Warranty Conditions, Warranty Exclusions, and Warranty Limitations listed
			X	X		Glass, Electrical components limited to heating element/igniters, Top feed auger assembly, Blowers, Junction Box, Remotes/Wall switches, linear actuator, power cord, vacuum switch, snap disc, wire harnesses and thermocouple
		X				Electrical components limited to modules, remotes/wall switches, valves, pilots, blowers, junction boxes, wire harnesses, transformers and lights (excluding light bulbs)
		X		X		Cement Refractory Panels, Glass Liner Panels
3 years			X			Firepots, burnpots, Harman mechanical feeders
5 years		X		X		Catalysts, Vented and Vent Free burners and logs
10 years	1 year	X				Burners, logs and metal/fiber refractory components of HHT manufactured fireplaces or stoves, venting due to poor workmanship
10 years	3 years		X	X		Castings, Medallions & Baffles, FlexBurn® System (engine, inner cover, access cover and fireback), Firebox and heat exchanger, HHT Chimney & Terminations, Manifolds
20 years	3 years	X				Firebox and heat exchanger
All purchased replacement parts and optional accessories						
1 Year	None	X	X	X	X	All purchased replacement parts and optional accessories

4021-645N 12/23

Page 1 of 2

B. Limited Warranty *(continued)*

WARRANTY CONDITIONS:

- Because HHT cannot control the quality of any Products sold by unauthorized sellers, this Warranty only covers Products that are purchased through an HHT authorized dealer or distributor unless otherwise prohibited by law; a list of HHT authorized dealers is available on the HHT branded websites.
- This Warranty is only valid while the applicable Product remains at the site of original installation.
- This Warranty is only valid in the country in which the HHT authorized dealer or distributor that sold the applicable Product is authorized to sell applicable Product.
- Contact your installing distributor or dealer for Warranty service. If the installing dealer or distributor is unable to provide necessary parts, contact the nearest HHT authorized dealer or supplier. Additional service fees may apply if you are seeking Warranty service from a dealer other than the dealer from whom you originally purchased the applicable Product.
- No HHT consumer should bear cost of warranty service or costs incurred while servicing warranty claims (i.e., travel, gas, or mileage) when the service is performed within the terms of this Warranty. Check with your dealer or distributor in advance for any costs to you when arranging a warranty call. Travel and shipping charges for parts are not covered by this Warranty.

WARRANTY EXCLUSIONS:

This Warranty does not cover the following:

- Changes in surface finishes as a result of normal use. As a heating appliance, some changes in color of interior and exterior surface finishes may occur. This is not a flaw and is not covered under the Warranty.
- Damage to printed, plated, or enameled surfaces caused by fingerprints, accidents, misuse, scratches, melted items or other external sources and residues left on the plated surfaces from the use of abrasive cleaners or polishes.
- Repair or replacement of parts that are subject to normal wear and tear during the Warranty Period are not covered. These parts include: paint, wood and pellet gaskets, firebricks, wood grates, flame guides, batteries and the discoloration of glass.
- Minor expansion, contraction, or movement of certain parts causing noise. These conditions are normal and complaints related to this noise are not covered by this Warranty.
- Damages resulting from: (1) failure to install, operate, or maintain the applicable Product in accordance with the installation instructions, operating instructions, and listing agent identification label furnished with the applicable Product; (2) failure to install the applicable Product in accordance with local building codes; (3) shipping or improper handling; (4) improper operation, abuse, misuse, continued operation with damaged, corroded or failed components, accident, or improperly/incorrectly performed repairs; (5) environmental conditions, inadequate ventilation, negative pressure, or drafting caused by tightly sealed constructions, insufficient make-up air supply, or handling devices such as exhaust fans or forced air furnaces or other such causes; (6) use of fuels other than those specified in the operation instructions; (7) installation or use of components not supplied with the applicable Product or any other components not expressly authorized and approved by HHT; (8) modification of the appliance not expressly authorized and approved by HHT in writing; and/or (9) interruptions or fluctuations of electrical power supply to the applicable Product.
- Non-HHT venting components, hearth connections or other accessories used in conjunction with the applicable Product.
- Any part of a pre-existing fireplace system in which an insert or a decorative gas applicable Product is installed.
- HHT's obligation under this Warranty does not extend to the Product's capability to heat the desired space. Information is provided to assist the consumer and the dealer in selecting the proper Product for the application. Consideration must be given to the Product location and configuration, environmental conditions, insulation and air tightness of the structure.

This warranty is void if:

- The applicable Product has been over-fired, operated in atmospheres contaminated by chlorine, fluorine, or other damaging chemicals. Over-firing can be identified by, but not limited to, warped plates or tubes, deformation/warping of interior cast iron structure or components, rust colored cast iron, bubbling, cracking and discoloration of steel or enamel finishes.
- The applicable Product is subjected to prolonged periods of dampness or condensation.
- There is any damage to the applicable Product due to water or weather damage which is the result of, but not limited to, improper chimney or venting installation.

LIMITATIONS OF REMEDIES AND LIABILITY:

- **EXCEPT TO THE EXTENT PROVIDED BY LAW, HHT MAKES NO EXPRESS WARRANTIES OTHER THAN THE WARRANTY SPECIFIED HEREIN. The owner's exclusive remedy and HHT's sole obligation under this Warranty or in contract, tort or otherwise, shall be limited to, at HHT's sole option, replacement of the Component Part(s), repair of the Component Part(s), or refund of the original purchase price of the applicable Product(s). In no event will HHT be liable for any incidental or consequential damages caused by defects in the applicable Product. Some States do not allow the exclusion or limitation of incidental or consequential damages, so the above limitation or exclusion may not apply to you. This Warranty gives you specific legal rights and you may also have other rights which vary from State to State. THE DURATION OF ANY IMPLIED WARRANTY IS LIMITED TO DURATION OF THE EXPRESSED WARRANTY SPECIFIED ABOVE FOR THE APPLICABLE PRODUCT. Some States do not allow limitations on how long an implied warranty lasts, so the above limitation may not apply to you.**

2 Product Specific Information

A. Appliance Certification

MODEL: **PRIMO-II-48, PRIMO-II-48ST,**
PRIMO-II-60, PRIMO-II-60ST,
PRIMO-II-72, PRIMO-II-72ST
LABORATORY: **Underwriters Laboratories, Inc. (UL)**
TYPE: **Vented Decorative Gas Appliances**
STANDARD: **ANSI Z21.50-2019 • CSA 2.22-2019**

This product is listed to ANSI standards for "Vented Decorative Gas Appliances" and "Gas Fired Appliances for Use at High Altitudes". Also Certified for Installation in a Bedroom or a Bedsitting Room.

NOTICE: *This installation must conform with local codes. In the absence of local codes you must comply with the National Fuel Gas Code, ANSI Z223.1-latest edition in the U.S.A. and the CAN/CGA B149 Installation Codes in Canada.*

NOT INTENDED FOR USE AS A HEAT SOURCE.
This appliance is decorative in nature and not intended to be a source of heat.

NOT FOR USE WITH SOLID FUEL.
This appliance is not intended to burn solid fuel.

NOT FOR USE WITH A THERMOSTAT.
This appliance is not to be used with a thermostat. When using the IFT2-RC450 remote control, the Thermostat function is disabled.

B. Glass Specifications

The firebox glass and the SafeSurface barrier glass on this appliance are tempered glass. Hearth & Home Technologies appliances manufactured with tempered glass may be installed in hazardous locations such as bathtub enclosures as defined by the Consumer Product Safety Commission (CPSC). The tempered glass has been tested and certified to the requirements of **ANSI Z97.1** and **CPSC 16 CFR 1202** (Safety Glazing Certification Council **SGCC# 1595** and **1597**. Architectural Testing, Inc. Reports **02-31919.01** and **02-31917.01**).

This statement is in compliance with **CPSC 16 CFR Section 1201.5** "Certification and labeling requirements" which refers to **15** U.S. Code **(USC) 2063** stating "…Such certificate shall accompany the product or shall otherwise be furnished to any distributor or retailer to whom the product is delivered."

Some local building codes require the use of tempered glass with permanent marking in such locations. Glass meeting this requirement is available from the factory. Please contact your dealer or distributor to order.

This appliance requires the installation of SafeSurface™ Glass which keeps the surface temperature of the barrier glass at a safe level and will still be hot to the touch when operated for long periods of time. SafeSurface™ Glass must be ordered with the appliance and installed prior to operation of the appliance. SafeSurface™ Glass complies with the barrier requirements of ANSI Z21.50-2019CSA 2.22-2019 for vented gas fireplaces. If the barrier glass is removed, the inner glass temperature will be very hot and cause burns.

C. BTU Specifications

Models *(U.S. or Canada)*	Maximum Input BTU/h	Minimum Input BTU/h	Orifice Size (DMS)
PRIMO-II-48 (NG)	45,000	31,500	#30
PRIMO-II-48 (Propane)	42,000	31,000	#48
PRIMO-II-48ST (NG)	45,000	31,500	#30
PRIMO-II-48ST (Propane)	42,000	31,000	#48
PRIMO-II-60 (NG)	57,000	39,500	#26
PRIMO-II-60 (Propane)	50,000	36,500	#45
PRIMO-II-60ST (NG)	57,000	39,500	#26
PRIMO-II-60ST (Propane)	50,000	36,500	#45
PRIMO-II-72 (NG)	58,500	42,000	#23
PRIMO-II-72 (Propane)	55,000	40,500	#44
PRIMO-II-72ST (NG)	58,500	42,000	#23
PRIMO-II-72ST (Propane)	55,000	40,500	#44

D. Electronic Control Module Compliance

These gas appliance models are built with the following electronic control module which is in compliance with Federal Communications Commission (FCC) and Industry Standard of Canada (IC).

Model Name: IntelliFire Touch® Technology 2.0 - Electronic Control Module (IFT2-ECM)

Model No: 2564-130

Federal Communications Commission (FCC) Compliance

This equipment has been tested and found to comply with the limits for a Class B digital device, pursuant to part 15 of the FCC Rules. These limits are designed to provide reasonable protection against harmful interference in a residential installation.

This equipment generates, uses, and can radiate radio frequency energy and, if not installed and used in accordance with the instructions, may cause harmful interference to radio communications. However, there is no guarantee that interference will not occur in a particular installation.

If this equipment does cause harmful interference to radio or television reception, which can be determined by turning the equipment off and on, the user is encouraged to try to correct the interference by one or more of the following measures:

- Reorient or relocate the receiving antenna.
- Increase the separation between the equipment and receiver.
- Connect the equipment into an outlet on a circuit different from that to which the receiver is connected.
- Consult the dealer or an experienced radio/TV technician for help.

Changes or modifications not expressly approved by the party responsible for compliance could void the user's authority to operate the equipment.

The FCC certification number and compliance statement are displayed on the Electronic Control Module (IFT2-ECM) housing as follows:

FCC ID: ULE2564-130
This module complies with Part 15 of the FCC Rules.
Operation is subject to the following two conditions:
(1) This module may not cause harmful interference, and
(2) This module must accept any interference received, including interference that may cause undesired operation.

Industry of Canada (IC) Compliance

This gas appliance electronic control module (IFT2-ECM) complies with Industry Canada license exempt RSS standard(s). Operation is subject to the following two conditions: (1) this module may not cause interference, and (2) this module must accept any interference, including interference that may cause undesired operation.
Le présent module est conforme aux CNR d'Industrie Canada applicables aux appareils radio exempts de licence. L'exploitation est autorisée aux deux conditions suivantes: (1) module ne doit pas produire de brouillage, et (2) l'utilisateur de module doit accepter tout brouillage radioélectrique subi, meme si le brouillage est susceptible d'en compromettre le fonctionnement.

The IC certification number is displayed on the Electronic Control Module (IFT2-ECM) housing as follows:

IC: 6732A-2564130

3 Important Safety and Operating Information

A. Appliance Safety

WARNING! DO NOT operate fireplace before reading and understanding operating instructions. *Failure to operate fireplace according to operating instructions could cause fire or injury.*

DANGER

HOT GLASS WILL CAUSE BURNS.

DO NOT TOUCH GLASS UNTIL COOLED.

NEVER ALLOW CHILDREN TO TOUCH GLASS.

- Keep children away.
- CAREFULLY SUPERVISE children in same room as fireplace.
- Children and adults should be alerted to the hazards of high surface temperatures and should stay away to avoid burns or clothing ignition.

High temperatures may ignite clothing or other flammable materials.

- Clothing, furniture, draperies, and other flammable materials must not be placed on or near the appliance.

A barrier designed to reduce the risk of burns from the hot viewing glass is provided with this appliance and must be installed for the protection of children and other at-risk individuals. DO NOT operate the appliance with the barrier removed. If the barrier becomes damaged, the barrier must be replaced with the manufacturer's barrier for this appliance.

Contact your dealer or Hearth & Home Technologies if the barrier is not present or help is needed to properly install one.

WARNING! Choking Hazard! *Keep rock media out of reach of children.*

- Young children should be carefully supervised when they are in the same room as the appliance. Toddlers, young children and others may be susceptible to accidental contact burns.

  A physical barrier is recommended if there are at risk individuals in the house. To restrict access to a fireplace or stove, install an adjustable safety gate to keep toddlers, young children and other at risk individuals out of the room and away from hot surfaces.
- Install a switch lock or a wall/remote control with child protection lockout feature.
- Keep remote controls out of reach of children.
- Never leave children alone near a hot fireplace, whether operating or cooling down.
- Teach children to NEVER touch the fireplace.
- Consider not using the fireplace when children will be present.

Contact your dealer for more information, or visit: www.hpba.org/Product-Info/Fireplace-Stove-Heater/Glass-Fronts-Safety.

To prevent unintended operation when not using your fireplace for an extended period of time (summer months, vacations, trips, etc):

- Remove batteries from remote controls.
- Turn off wall controls.

WARNING: This product and the fuels used to operate this product (liquid propane or natural gas), and the products of combustion of such fuels, can expose you to chemicals including benzene, which is known to the State of California to cause cancer and reproductive harm. For more information go to: www.P65Warnings.ca.gov.

Clear Space

WARNING! DO NOT *place combustible objects in front of the fireplace or block fireplace openings. High temperatures could start a fire. See Figure 3.1.*

Avoid placing candles and other heat-sensitive objects on mantel or hearth. Heat could damage these objects.

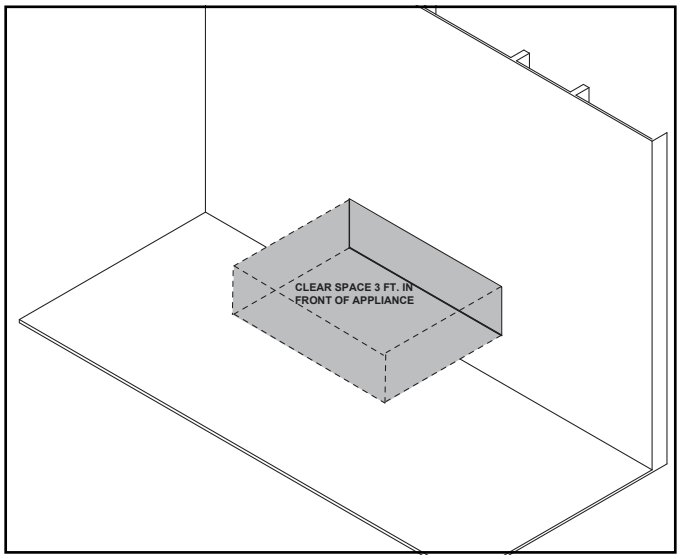

Figure 3.1 Clear Space Requirement - All Models

B. General Operating Parts

Figure 3.2 references the general operating parts of the appliance and the section of this manual in which they are discussed.

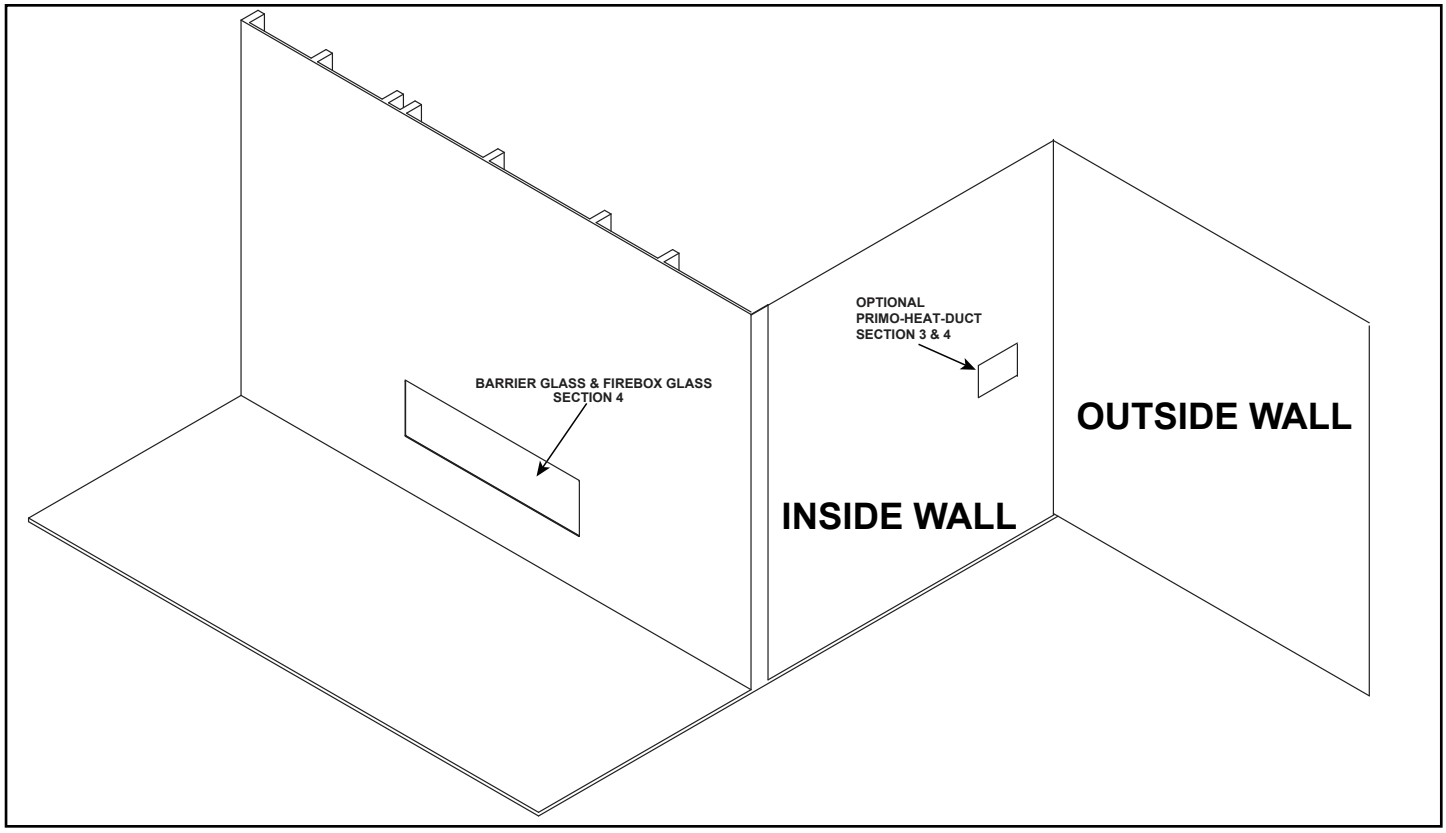

Figure 3.2 General Operating Parts

C. Fuel Specifications

WARNING! Risk of Fire or Explosion! *Appliance must be set up for compatible gas type!*

- This appliance is designed to operate on either natural gas or propane. Make sure the appliance is compatible with gas type selected for installation site.
- Conversions must be made by a qualified service technician using Hearth & Home Technologies specified and approved parts.

D. Wall and Mantel Temperatures

ANSI/CSA Standards

The American National Standards Institute (ANSI) and Canadian Standards Association (CSA) write the safety and performance standards to which all gas fireplaces are tested. The following are the allowable temperatures around and on a gas fireplace per the ANSI/CSA standards:

Combustible Mantel and Surfaces around a Fireplace

The allowable temperature rise above ambient is 117°F for all exposed combustible surfaces around the fireplace, including the mantel, when installed according to the installation instructions. Non-combustible surfaces and mantels do not have a maximum temperature limit; however the installation instructions must still be followed for any restrictions on placement of non-combustible materials on or around the fireplace.

Example: The mantel above a fireplace in a room that is 70°F is allowed to reach but not exceed 187°F (70°F+117°F = 187°F).

E. Good Faith Wall Surface/TV Guidelines

If installing a television (TV) above the appliance, see appliance Installation Manual Section 2.B.

F. Lighting Instructions (IPI)

FOR YOUR SAFETY READ BEFORE LIGHTING

WARNING: If you do not follow these instructions exactly, a fire or explosion may result causing property damage, personal injury or loss of life.

A. This appliance is equipped with an intermittent pilot ignition (IPI) device which automatically lights the burner. **DO NOT** try to light the burner by hand.

B. **BEFORE LIGHTING**, smell all around the appliance area for gas. Be sure to smell next to the floor because some gas is heavier than air and will settle on the floor.

WHAT TO DO IF YOU SMELL GAS

- **DO NOT** try to light any appliance.
- **DO NOT** touch any electric switch; do not use any phone in your building.
- Immediately call your gas supplier from a neighbor's phone. Follow the gas supplier's instructions.
- If you cannot reach your gas supplier, call the fire department.

C. Use only your hand to push in or turn the gas control knob. Never use tools. If the knob will not push in or turn by hand, **DO NOT** try to repair it, call a qualified service technician. Force or attempted repair may result in a fire or explosion.

D. **DO NOT** use this appliance if any part has been under water. Immediately call a qualified service technician to inspect the appliance and to replace any part of the control system and any gas control which has been under water.

LIGHTING INSTRUCTIONS (IPI)

1. This appliance is equipped with an ignition device which automatically lights the burner. DO NOT try to light the burner by hand.

GAS VALVE

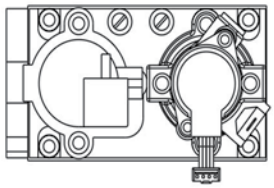

2. Wait five (5) minutes to clear out any gas. Then smell for gas, including near the floor. If you smell gas, STOP! Follow "B" in the Safety Information located on the top of this label. If you do not smell gas, go to next step.
3. To light the burner:
   Equipped with wall switch: Turn ON/OFF switch to ON.
   Equipped with remote or wall control: Press ON or FLAME button.
   Equipped with thermostat: Set temperature to desired setting.
4. If the appliance does not light after three tries, call your service technician or gas supplier.

TO TURN OFF GAS TO APPLIANCE

1. Equipped with wall switch: Turn ON/OFF switch to OFF.
   Equipped with remote or wall control: Press OFF button.
   Equipped with thermostat: Set temperature to lowest setting.
2. Service technician should turn off electric power to the control when performing service.

DANGER

HOT GLASS WILL CAUSE BURNS.
DO NOT TOUCH GLASS UNTIL COOLED.
NEVER ALLOW CHILDREN TO TOUCH GLASS.

A barrier designed to reduce the risk of burns from the hot viewing glass is provided with this appliance and must be installed for the protection of children and other at-risk individuals.

WARNING:

DO NOT CONNECT LINE VOLTAGE (110/120 VAC OR 220/240 VAC) TO THE CONTROL VALVE.

Improper installation, adjustment, alteration, service or maintenance can cause injury or property damage. Refer to the owner's information manual provided with this appliance. For assistance or additional information, consult a qualified installer, service agency or the gas supplier.

This appliance needs fresh air for safe operation and must be installed so there are provisions for adequate combustion and ventilation air.

WARNING: This product and the fuels used to operate this product (liquid propane or natural gas), and the products of combustion of such fuels, can expose you to chemicals including benzene, which is known to the State of California to cause cancer and reproductive harm. For more information go to: www.P65Warnings.ca.gov.

Keep burner and control compartment clean. See installation and operating instructions accompanying appliance.

CAUTION:

Hot while in operation. DO NOT touch. Keep children, clothing, furniture, gasoline and other liquids having flammable vapors away.

DO NOT operate the appliance with fixed glass assembly removed, cracked or broken. Replacement of the fixed glass assembly should be done by a licensed or qualified service person.

NOT FOR USE WITH SOLID FUEL

For use with natural gas and propane. A conversion kit, as supplied by the manufacturer, shall be used to convert this appliance to the alternate fuel.

Also Certified for Installation in a Bedroom or a Bedsitting Room.

This appliance must be installed in accordance with local codes, if any; if none, follow the *National Fuel Gas Code, ANSIZ223.1/ NFPA 54, or the National Gas and Propane Installation code, CSA B149.1.*

For additional information on operating your Hearth & Home Technologies fireplace, please refer to www.hearthnhome.com.

593-913K

G. Appliance Break-In

NOTICE! Open windows for air circulation during fireplace break-in.

- *Some people may be sensitive to smoke and odors.*
- *Smoke detectors may activate.*

Follow the initial break-in procedure below to cure the materials used to manufacture the fireplace and the finishing materials around it.

- The fireplace should be run three to four hours continuously on high.
- Turn the fireplace off and allow it to cool completely.
- Remove fixed glass assembly. See Section 4.B.
- Clean fixed glass assembly. See Section 4.B.
- Replace the fixed glass assembly.

Note: Some installations may require additional run time to cure. If odors persist after the initial break-in period, run the fireplace for an additional three to four hours continuously on high.

Note: The IFT 2.0 system has a safety feature that automatically shuts down the fireplace after 9 hours of continuous operation without receiving a command from the remote control. If this occurs, restart the appliance.

H. Heat Management

Burn Rate

This model has a variable burn rate which is controlled by the remote control. Therefore the flame height is adjustable.

The flame height may be adjusted as desired by locating the flame option on the remote control and adjusting up or down to desired flame height.

Optional Heat Management Systems

The PRIMO-HEAT-DUCT is an optional heat management system which may be installed with this appliance. It allows the heat from the appliance to be redirected as desired by diverting heat into an adjacent room.

Refer to Section 6 of the appliance Installation Manual to for more information on the PRIMO-HEAT-DUCT. The PRIMO-HEAT-DUCT heat management system must be installed by a qualified service technician at the time of appliance installation.

I. Detailed Component Operating Instructions

IFT2-ECM Detailed Operating Instruction

This model is shipped from the factory equipped with the IFT2-RC450 remote. The IntelliFire Wi-Fi module (IFT-WFM) is an available option.

1. The Electronic Control Module (IFT2-ECM) has a three-position ON/OFF/REMOTE selector switch that must be set for proper operation. See Figure 3.3. When changing switch positions,it is important to pause in each position for 1-2 seconds.

   OFF Position:

   The appliance will not respond to any commands from the IntelliFire Mobile App, IFT-RC150U or IFT2-RC450 remote controls. The unit should be in the OFF position during installation, service, fuel conversion and to reset the IFT2-ECM in the event the system goes into a LOCK-OUT mode as the result of a system error. When switched to the OFF position while the appliance is operating, the system will shut down.

   ON Position:

   The appliance will ignite and run continuously at the HIGH flame setting. No adjustment in flame height is possible.

NOTICE! *When the IFT2-ECM selector switch is in the ON position, the ECM shall not respond to the wired wall switch, mobile app or wireless remote controls.*

The IFT2-ECM has a safety feature that will automatically shut down the fireplace after 9 hours of continuous operation in the ON position.

   Remote Position:

   The remote position allows operation of the appliance from the IntelliFire app, IFT2-RC450 or IFT-RC150U remote controls. The IFT2-ECM switch must be in the REMOTE position to pair the IFT2-ECM with the IFT2-PACM and/or IFT2-RC450 and RC150U remote controls. See the IFT2-RC450 or IFT-RC150U installation manual for detailed instructions on pairing the IFT2-ECM with the remote controls. After successfully pairing a IFT2-RC450, all installed accessories can be controlled by the IFT2-RC450 (see IFT2-RC450 user manual). The IFT-RC150U allows the user to turn ON/OFF the flame in the appliance and activate the Cold Climate mode if desired. The IFT2-ECM has a safety feature that will automatically shut down the fireplace after 9 hours of continuous operation without receiving a command from the IFT2-RC450 or IFT-RC150U .

2. If multiple control options are installed, the IFT2-ECM will respond to the last command from the wired wall switch, IFT2-RC450 or IFT-RC150U . The wired wall switch is NOT available if a Power Vent is used.

NOTICE! *The Cold Climate feature is disabled on PRIMO-II models because the power vent is built into the appliance.*

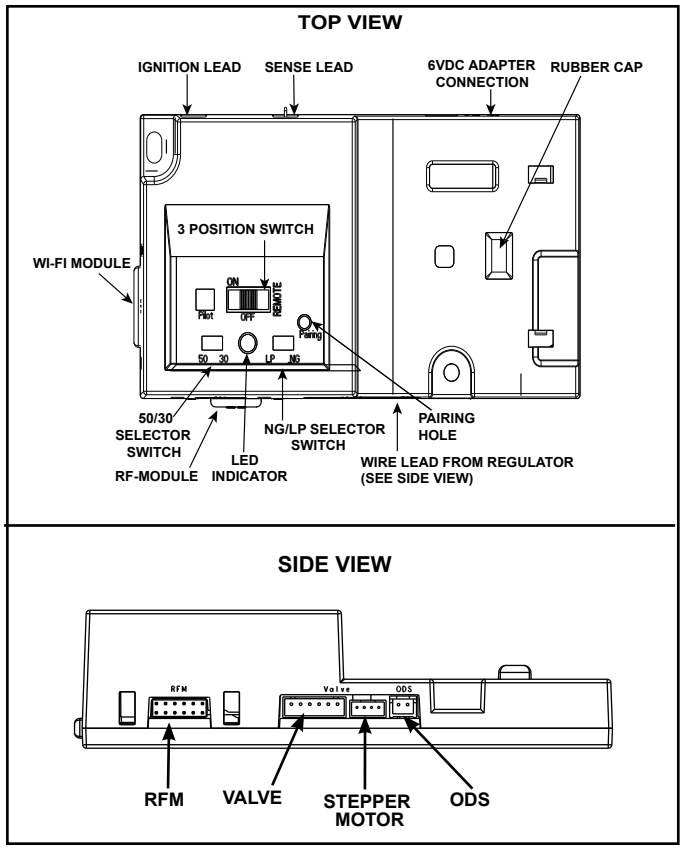

Figure 3.3 IFT-ECM 2.0

3. An IFT2-ECM reset is required if the module is in a lock-out condition. When this occurs, the appliance is shut down and the IFT2-ECM status indicator LED will be blinking a RED/GREEN error code along with a one-time audible double- beep. If the IFT2-ECM is in a lock-out condition, refer to the troubleshooting chart to interpret the error code and take corrective action as required.

CAUTION! Risk of burns! *Appliance surfaces are hot when operating and during cool down. Use care and wear gloves when opening the front and accessing components inside the appliance.*

NOTE: A reset is achieved by cycling the circuit breaker to which the appliance is wired. For appliances that have been converted to Propane, the RESET switch may also be cycled.

Appliance ON/OFF:

A remote control, wireless wall switch or optional Wi-Fi may be used to control the ON/OFF function of the appliance. Follow instructions included with the installed control.

LED's

LED's are a standard feature on PRIMO-II models. Use the IFT2-RC450 remote to control the functions of the LED's, including ON/OFF, color choice and color intensity.

Wi-Fi (Optional)

If desired, a Wi-Fi module (IFT-WFM) may be added to allow the appliance to be run via an app. Contact your dealer to order.

4 Maintenance and Service

IMPORTANT! Any safety screen, decorative barrier front or guard removed for servicing must be replaced prior to operating the fireplace.

When properly maintained, your fireplace will give you many years of trouble-free service. **Contact your dealer** to answer questions regarding proper operation, troubleshooting and service for your appliance. Visit www.heatnglo.com to locate a dealer. We recommend annual service by a qualified service technician.

A. Maintenance: Frequency and Tasks

Task	Frequency	To be completed by
Remote Control	Seasonally	Homeowner
Venting, Air Intake and Termination Cap	Seasonally	
Glass Cleaning-SafeSurface Barrier Glass and Firebox Glass	Seasonally	Qualified Service Technician
Gasket Seal and Glass Inspection	Annually	
Log Inspection	Annually	
Firebox Inspection	Annually	
Control Compartment & Firebox Top	Annually	
Pilot and Burner Ignition and Operation	Annually	
Damper Inspection	As needed	
Electrical Service and Repair	As needed	

B. Maintenance Tasks - Homeowner

Installation and repair should be done by a qualified service technician only. The appliance should be inspected before use and at least annually by a professional service person.

The following tasks may be performed annually by the homeowner. If you are uncomfortable performing any of the listed tasks, please call your dealer for a service appointment.

More frequent cleaning may be required due to excessive lint from carpeting, bedding material, etc. It is imperative that control compartments, burners and circulating air passageways of the appliance be kept clean. Any safety screen, guard, or barrier removed for servicing the appliance must be replaced prior to operating the appliance.

CAUTION! Risk of Burns! *The fireplace shall be turned off and cooled before servicing.*

Remote Control

Frequency: Seasonally

By: Homeowner

Tools needed: Replacement batteries and remote control instructions.

- Locate remote control.
- Verify operation of remote. Refer to remote control operation instructions for proper calibration and setup procedure.
- Replace batteries as needed in remote transmitters.
- Place remote control out of reach of children.

If not using your fireplace for an extended period of time (summer months, vacations/trips, etc), to prevent unintended operation:

- Remove batteries from remote controls.

Venting, Air Intake and Termination Cap

Frequency: Seasonally

By: Homeowner

Tools needed: Protective gloves and safety glasses.

- Inspect exposed venting and termination cap for blockage or obstruction such as plants, bird nests, leaves, snow, debris, etc.
- Verify termination cap clearance to subsequent construction (building additions, decks, fences, or sheds).
- Inspect for corrosion or separation.
- Verify caulking and sealing of vent components and termination cap remains intact.
- Inspect draft shield to verify it is not damaged or missing.

C. Maintenance Tasks - Qualified Service Technician

The following tasks must be performed by a qualified service technician.

Glass Cleaning-SafeSurface Barrier Glass and Firebox Glass

Frequency: Seasonally

By: Qualified Service Technician

Tools Needed: Protective gloves, glass cleaner, suction cups, drop cloth and a stable work surface.

WARNING! Risk of Asphyxiation! *Handle firebox glass assembly with care. Inspect the gasket to ensure it is undamaged and inspect the glass for cracks, chips or scratches.*

- ***DO NOT*** *strike, slam or scratch glass.*
- ***DO NOT*** *operate fireplace with glass removed, cracked, broken or scratched.*
- ***DO NOT*** *use abrasive cleaners.*
- ***DO NOT*** *clean glass while it is hot.*
- *Replace as a complete assembly.*

CAUTION! Risk of Injury! *Glass assembly installation and removal must be performed by a qualified service technician. See chart below for glass assembly weights.*

- ***PRIMO-II-60 AND PRIMO-II-72 MODELS:*** ***It is recommended that Glass installation and removal be performed by two qualified service technicians.***

CAUTION! Risk of Cuts or Abrasions. *Wear protective gloves and safety glasses during installation. Sheet metal edges are sharp.*

WARNING! Risk of Injury! *Glass is heavy. Use suction cups to handle glass.*
Inspect glass retainer brackets to ensure the firebox is properly sealed.

SafeSurface Barrier Glass Weights		
PRIMO-II-48	**PRIMO-II-60**	**PRIMO-II-72**
15 lbs	**18 lbs**	**22 lbs**

Firebox Glass Weights		
PRIMO-II-48	**PRIMO-II-60**	**PRIMO-II-72**
25 lbs	**30 lbs**	**36 lbs**

Cleaning SafeSurface Barrier Glass and Firebox Glass

- Prepare a work area large enough to accommodate firebox glass assembly and barrier glass by placing a drop cloth on a flat, stable surface.

Note: Firebox glass assembly and gasketing may have residue that can stain carpeting or floor surfaces.

- Read instructions for proper SafeSurface barrier glass and Firebox glass removal and replacement instructions. Once removed, set glass aside on a work surface.
- Clean glass with a non-abrasive commercially available cleaner.
  - Light deposits: Use a soft cloth with soap and water.
  - Heavy deposits: Use commercial fireplace glass cleaner (consult with your dealer).

NOTE: When drywall is the only material used in finishing, the top of the barrier glass may be tilted outward for removal.

WARNING! Risk of Fire! *Install barrier glass as instructed. Overheating will occur.*

Remove SafeSurface Barrier Glass

1. Press glass suction cups firmly against glass. Ensure an adequate hold has been created.
2. Remove barrier glass retaining clips on left and right sides by gently pulling up and rotating outward. See Figure 4.16.
3. Lift glass straight up into the top cavity, tilt the bottom out and remove glass from the appliance. See Figure 4.1.

NOTE: When drywall is the only material used in finishing, the top of the barrier glass may also be tilted outward for removal.

4. Set glass on prepared work surface.

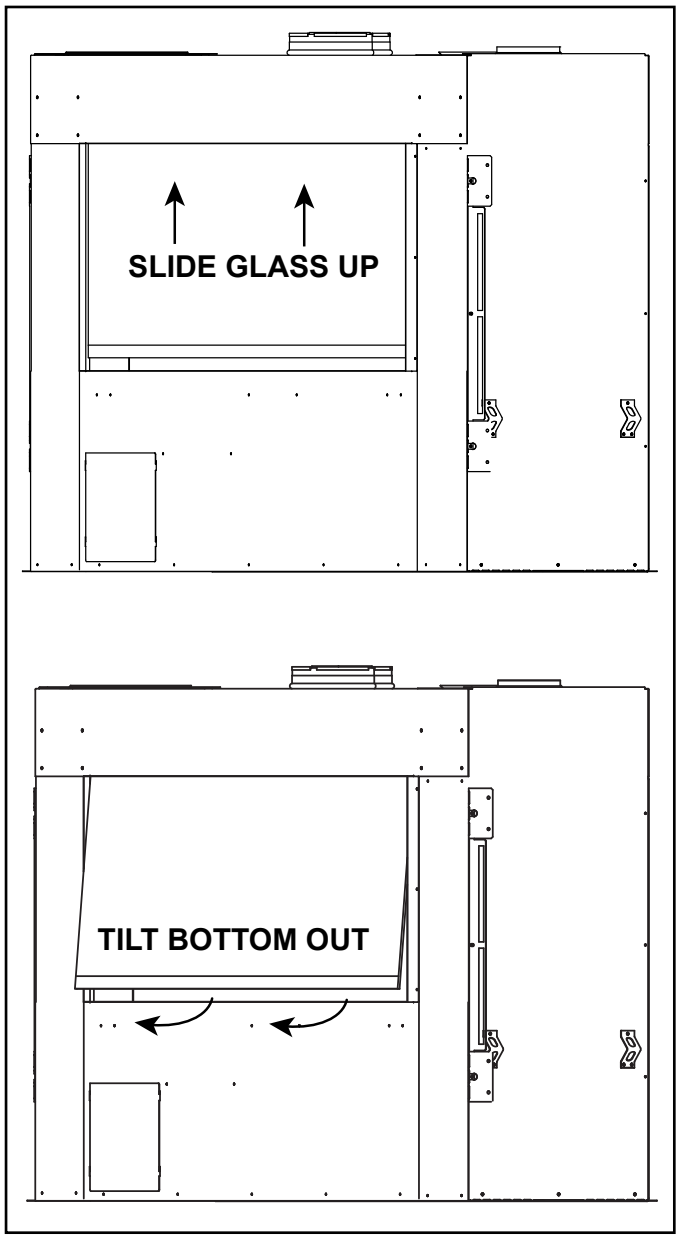

Figure 4.1 Barrier Glass Removal

Remove Transition Media Tray and Transition Panels

1. Remove media from media tray. Remove side transition panels located on the left and right sides of the appliance opening by removing the top and bottom screw and tilting the top of the transition panel toward the center of the appliance.
2. Remove the transition media tray from the appliance by lifting upward to disengage the press fit between the glass frame and the glass rail. The transition media tray fits tightly between the glass rail and glass frame, lift carefully.

Firebox Glass

WARNING! Risk of Asphyxiation! *Handle firebox glass assembly with care. Inspect the gasket to ensure it is undamaged and inspect the glass for cracks, chips or scratches.*

- ***DO NOT*** *strike, slam or scratch glass.*
- ***DO NOT*** *operate fireplace with glass removed, cracked, broken or scratched.*
- *Replace as a complete assembly.*

WARNING! Risk of Injury! *Glass is heavy. Use suction cups to handle glass.*

CAUTION! Risk of Injury! *Glass removal and installation must be performed by a qualified service technician. See chart below for firebox glass weights.*

- ***PRIMO-II-60 AND PRIMO-II-72 MODELS: It is recommended that glass installation and removal be performed by two qualified service technicians.***

Firebox Glass Weights		
PRIMO-II-48	**PRIMO-II-60**	**PRIMO-II-72**
25 lbs	**30 lbs**	**36 lbs**

CAUTION! Risk of Cuts! *Wear protective gloves and safety glasses during installation. Use suction cups to handle firebox glass.*

Remove Firebox Glass Assembly Using Suction Cups

1. Remove the firebox glass high temperature limit switch assembly by removing the machine screw holding the bracket in place and set the assembly aside. See Figure 4.2.

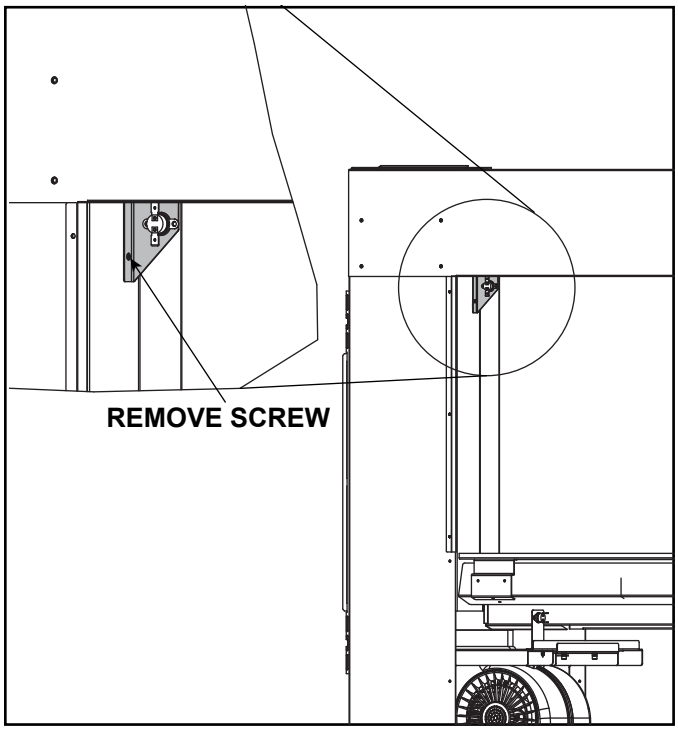

Figure 4.2 High Temperature Limit Switch Installed Correctly

2. Locate the brackets, on the left and right sides of the glass retainer bar assembly, that hold the glass in position. See Figure 4.3 (A). Remove the screw from the hole in the center of the bracket. See Figure 4.3 (B).
3. Using a hand tool only, start the threads of the screw into the rivnut in the bracket shown in Figures 4.3 (C) and 4.4. This will hold the screw until it is needed for reassembly.
4. Pull downward on the glass retainer bar assembly to disengage it from the retaining channel of the appliance. If the retainer bar is difficult to remove, use a hand tool to continue threading the bolt into the rivnut (started in Step 3) to assist in disengaging the retainer bar assembly. Do not bottom out the screw in the rivnut as this may cause the rivnut to deform and spin. Repeat steps 2 through 4 on opposite side.

Note: DO NOT use a power tool for this step.

5. Remove the glass retainer bar assembly. See Figure 4.3 (D).

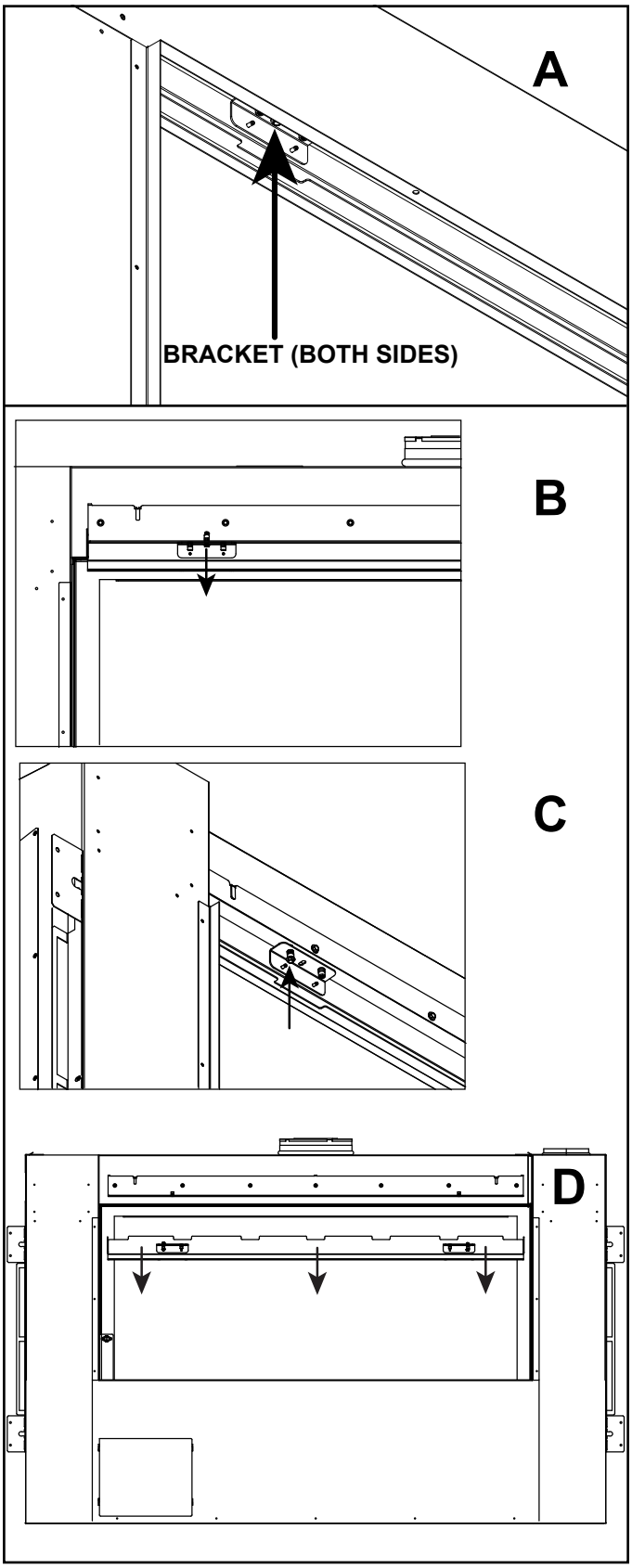

Figure 4.3 Removing Glass Retainer Bar Assembly

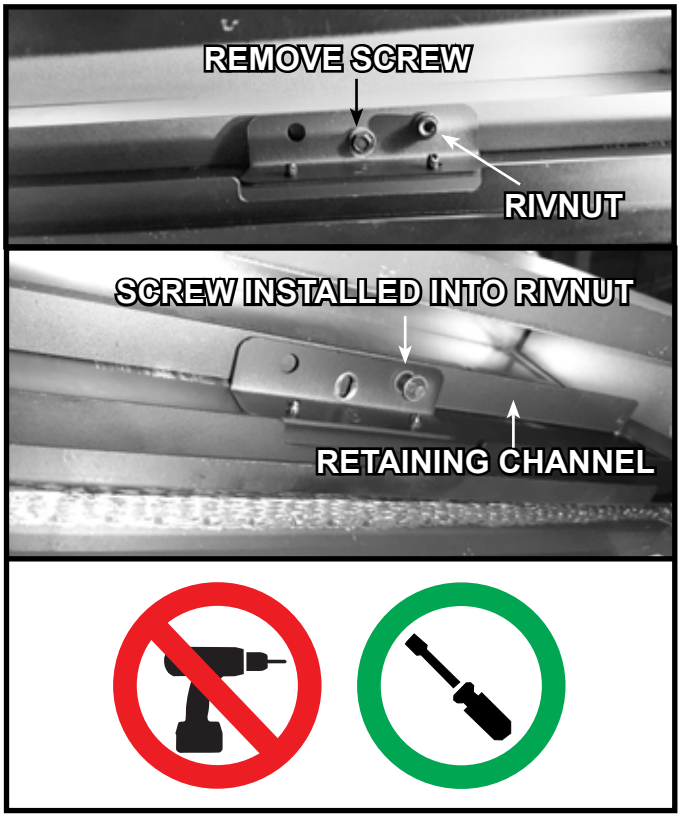

Figure 4.4 Remove Screw and Install into Rivnut

5. Press glass suction cups firmly against glass and ensure that an adequate hold has been created. Lift up, then lower the glass assembly downward toward the firebox control cavity. Tip it outward slightly and lift out of appliance. See Figure 4.5.

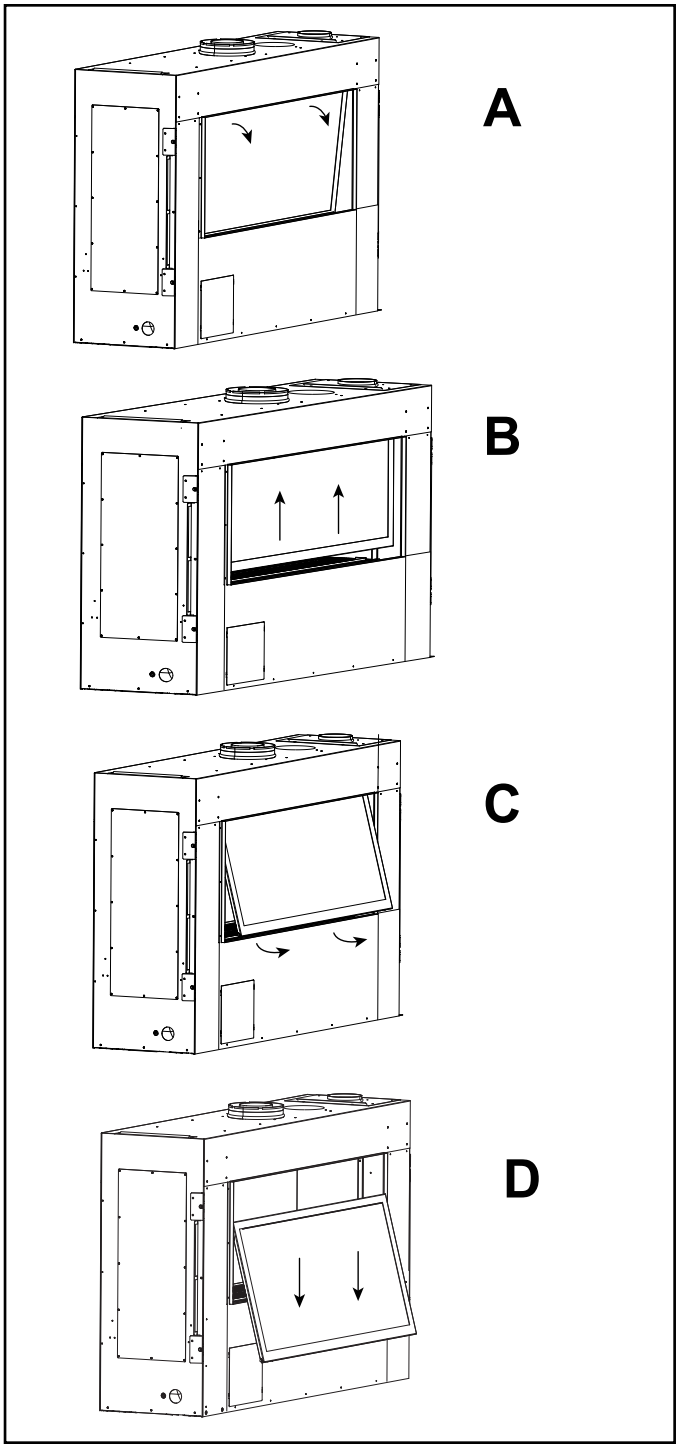

Figure 4.5 Removing Firebox Glass

Replace Firebox Glass Assembly Using Suction Cups

1. Place the top of the firebox glass assembly into appliance first. Tilt the bottom in toward the firebox and set glass assembly into the glass frame rail ensuring that the assembly is centered left to right. See Figure 4.6.

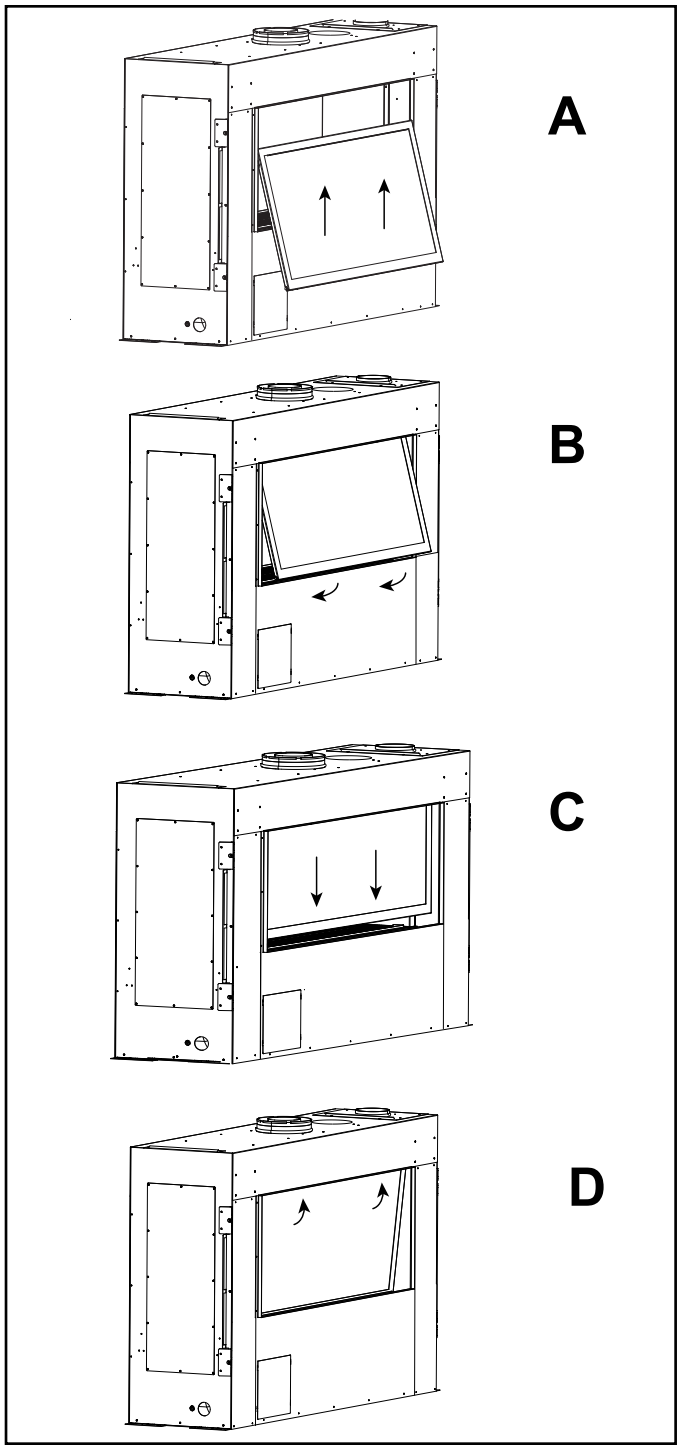

Figure 4.6 Replacing Firebox Glass

2. Remove the screws from the glass retainer bar assembly's bracket rivnuts, if they were left in from glass removal process, and set aside.
3. Align the glass retainer bar assembly with the appliance retaining channel. Use the locating tabs on the sides of the glass retainer bar assembly to help center left and right. See Figure 4.7.
4. Seat the glass retainer bar assembly in the appliance retaining channel by firmly pushing upward.
5. To fully seat the glass retainer bar assembly, carefully thread the screws, which were removed from the rivnuts in Step 2, into the center hole of the bracket assembly on each side. See Figure 4.8. Use caution to not cross thread the screw. Once both screws are properly aligned and partially installed, the screws may be installed completely.
6. Reinstall high temperature limit switch assembly and attach wire connections. See Figure 4.2.

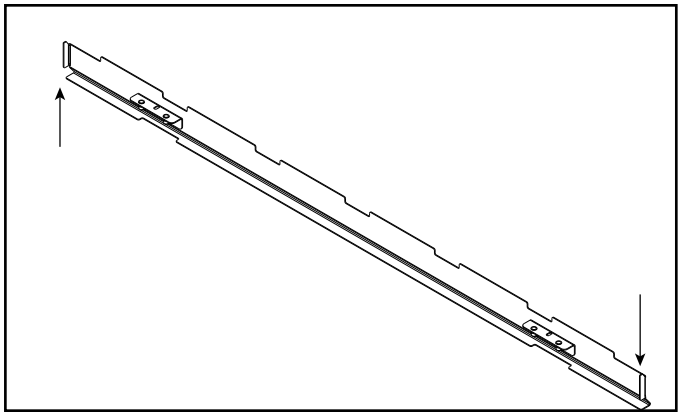

Figure 4.7 Glass Retainer Bar Assembly Locating Tabs

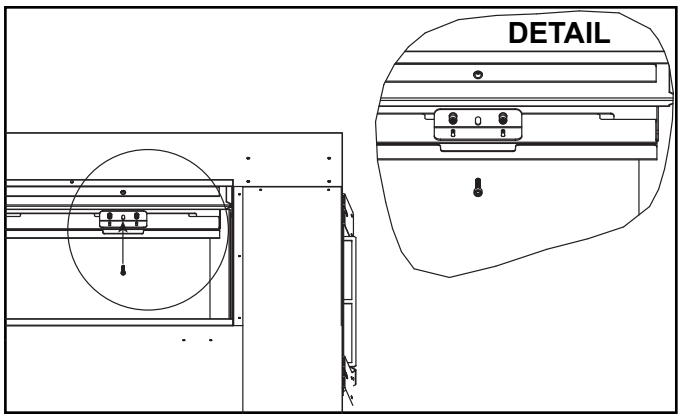

Figure 4.8 Glass Retainer Bar Assembly Installation

Install Transition Media Tray and Transition Panels

Note: If appliance has been converted to Propane, ensure the reset switch has been installed. Refer to the instructions included with the conversion kit.

1. Set and press the transition media tray into position as shown in Figure 11.19. The rear return bend should be positioned in between the glass frame and the glass rail so the semi-circle notches will face the glass. The front of the media tray is seated on the SafeSurface barrier glass retainer bracket.

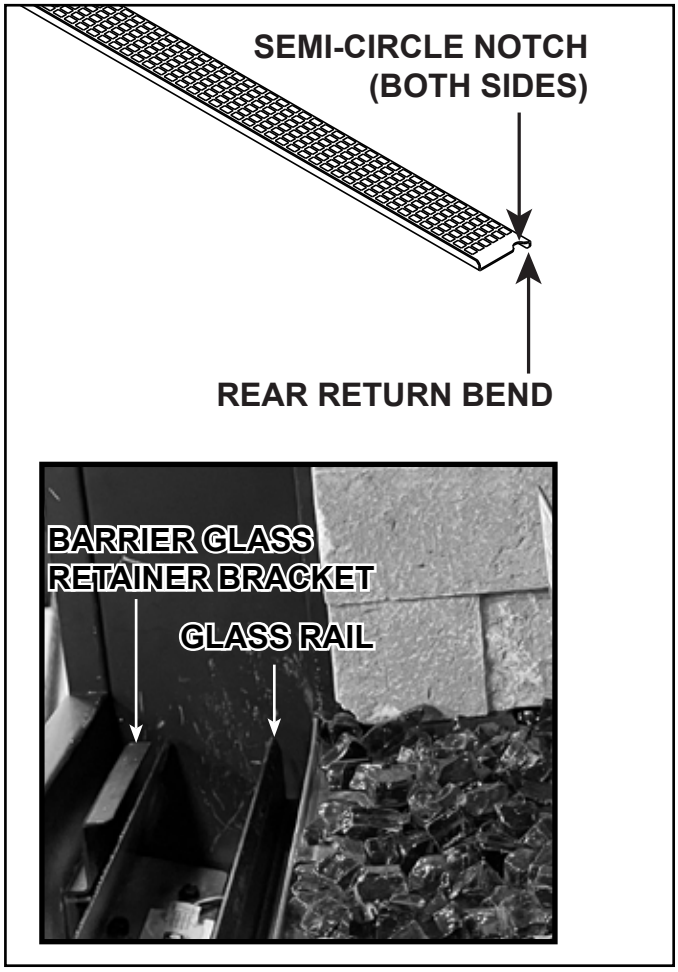

Figure 4.9 Install Transition Media Tray

2. Ensure that high temperature limit switch is installed correctly with wires connected. See Section 11 of appliance Installation Manual for installation instructions. See Figure 4.2. Verify that wires are not pinched by the transition media tray.
3. Install transition panels on left and right sides of appliance opening. Align the bottom of the panel with the pilot hole on the appliance and ensure the tab is on the outside of the media tray ledge as shown in Figure 4.10. Install bottom screw. Tilt the top into position and install the top screw. See Figure 4.11.

Note: The tool used for operating the gas shutoff valve can be stored vertically behind the right transition panel as shown in Figure 4.12.

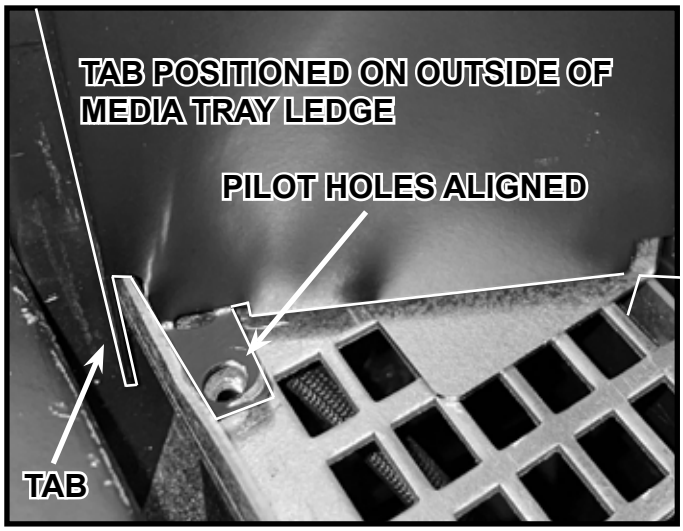

Figure 4.10 Transition Panel Tab Position

Figure 4.11 Transition Panel installed

Figure 4.12 Storage Location for Gas Shutoff Valve Tool

Install Transition Media

WARNING! Risk of Overheating! DO NOT *allow transition media to fall into SafeSurface barrier glass slot. Remove all media that falls into this area. Convection air flow will be impaired. Component damage will occur.*

1. Place the appropriate amount of media in the transition media tray as directed in Table 11.3 in Section 11 of appliance Installation Manual. It may be helpful to use a small cup to more precisely pour an even layer of media onto the tray. See Figure 4.13.

2. Install the SafeSurface barrier glass.

Note: Steps 1 and 2 will be repeated one time if the appliance is a See-through model.

Figure 4.13 Place Media in Transition Media Tray

Install SafeSurface Barrier Glass

WARNING! Risk of Injury! *Handle barrier glass with care. Inspect the glass for cracks, chips or scratches.*

- ***DO NOT*** *strike, slam or scratch glass.*
- ***DO NOT*** *operate fireplace with glass removed, cracked, broken or scratched.*
- *Replace as a complete assembly.*

WARNING! Risk of Injury! *Glass is heavy. Use suction cups to handle barrier glass.*

CAUTION! Risk of Injury! *Glass installation and removal must be performed by a qualified service technician. See chart below for barrier glass weights.*

- ***PRIMO-II-60 AND PRIMO-II-72 MODELS: It is recommended that glass installation and removal be performed by two qualified service technicians.***

SafeSurface Barrier Glass Weights		
PRIMO-II-48	**PRIMO-II-60**	**PRIMO-II-72**
15 lbs	**18 lbs**	**22 lbs**

CAUTION! Risk of Cuts or Abrasions. *Wear protective gloves and safety glasses during installation. Sheet metal edges are sharp.*

WARNING! Risk of Fire! *Install barrier glass as instructed. Overheating will occur.*

1. Locate the glass retaining clips and stage for install.

Note: The glass retaining clips ship from the factory as a pair. If using glass retaining clips for the first time, they will need to be broken apart. See Figure 4.14.

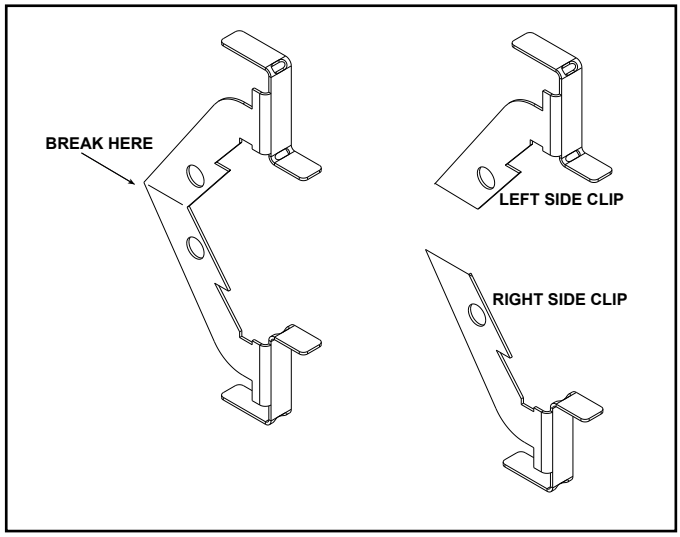

Figure 4.14 Glass Retaining Clip Separation

2. Press glass suction cups firmly against the glass surface on which the printed text “THIS SIDE OUT” is legible. Ensure that an adequate hold has been created.
3. Ensure no glass media is in the SafeSurface barrier glass retainer bracket. Set the glass into the barrier glass retainer bracket, located behind the sheet rock ledge and the front side of the transition media tray. Center the glass left to right.

WARNING! Risk of Overheating! *SafeSurface glass slot MUST be free of media and obstructions.*

4. Install the SafeSurface glass retaining clips by placing the bottom of the clip into the slot shown in Figure 4.15. Rotate the top of the clip up into position as shown in Figure 4.16. Repeat on both sides of the appliance.

Note: When barrier glass is properly placed, a 5/16 inch gap is maintained between the top of the barrier glass and the top of the appliance opening. See Figure 4.17.

WARNING! Risk of Fire! *A 5/16 vertical gap is required for proper airflow.*

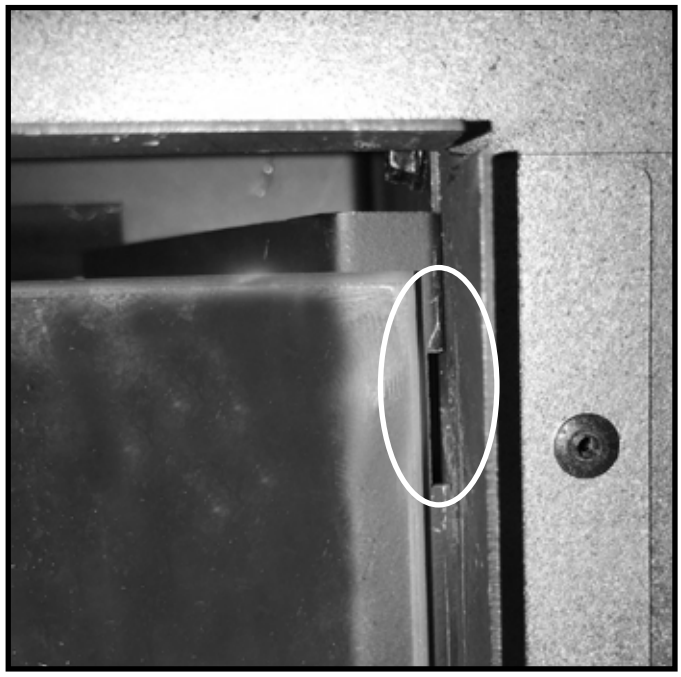

Figure 4.15 Slot for Barrier Glass Retaining Clip (Right Side Shown)

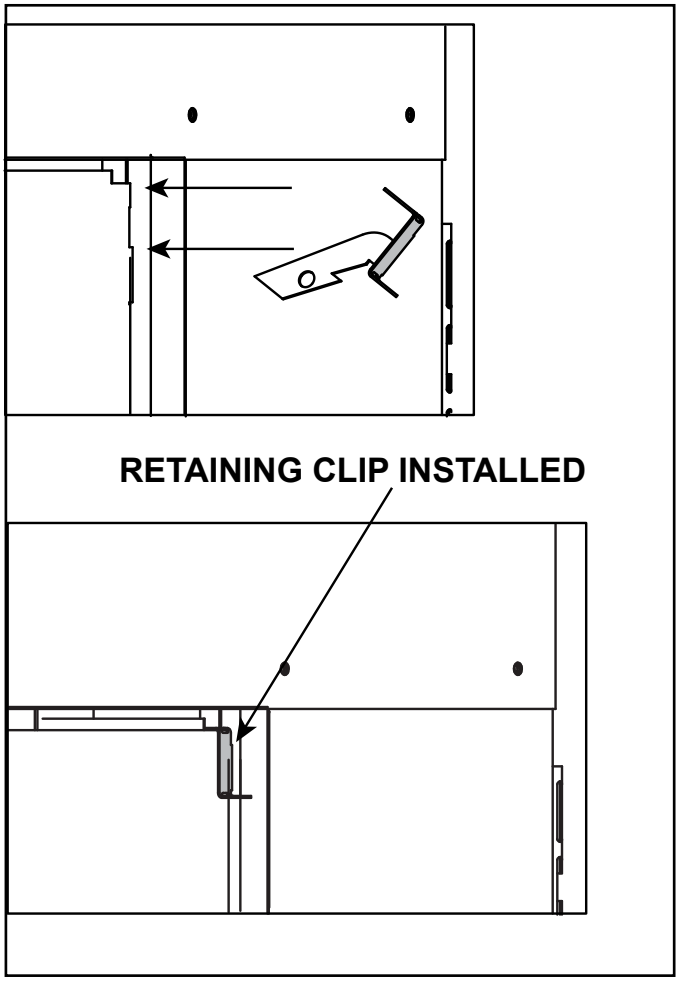

Figure 4.16 Barrier Glass Retaining Clip Installation (Right Side Shown)

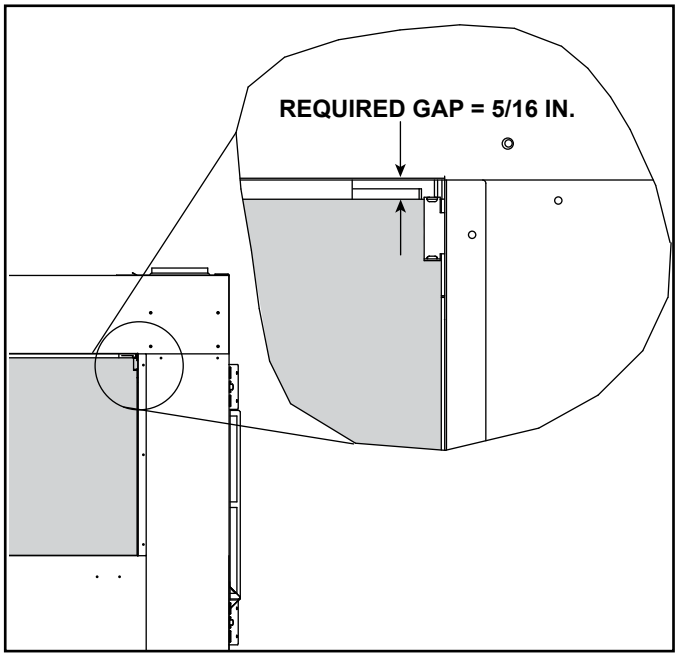

Figure 4.17 Barrier Glass Retaining Clip Installed

Gasket Seal and Glass Assembly Inspection

Frequency: Annually

By: Qualified Service Technician

Tools needed: Protective gloves, drop cloth and a stable work surface.

- Inspect gasket seal and its condition.
- Inspect fixed glass assembly for scratches and nicks that can lead to breakage when exposed to heat.
- Confirm there is no damage to glass or glass frame. Replace as necessary.
- Verify that fixed glass assembly is properly retained and attachment components are intact and not damaged. Replace as necessary.

Log Inspection

Frequency: Annually

By: Qualified Service Technician

Tools needed: Protective gloves.

- Inspect for damaged or missing logs. Replace as necessary. Refer to log placement instructions for log placement.
- Verify correct log placement and no flame impingement causing sooting. Correct as necessary.

Firebox Inspection

Frequency: Annually

By: Qualified Service Technician

Tools needed: Protective gloves, sandpaper, steel wool, cloths, mineral spirits, primer and touch-up paint.

- Inspect for paint condition, warped surfaces, corrosion or perforation. Sand and repaint as necessary.
- Replace fireplace if firebox has been perforated.

Control Compartment and Firebox Top

Frequency: Annually

By: Qualified Service Technician

Tools needed: Protective gloves, vacuum cleaner, dust cloths

- Vacuum and wipe out dust, cobwebs, debris or pet hair. Use caution when cleaning these areas. Screw tips that have penetrated the sheet metal are sharp and should be avoided.
- Remove all foreign objects.
- Verify unobstructed air circulation.

Pilot and Burner Ignition and Operation

Frequency: Annually

By: Qualified Service Technician

Tools needed: Protective gloves, vacuum cleaner, whisk broom, flashlight, voltmeter, indexed drill bit set, and a manometer.

- Inspect orifice for soot, dirt and corrosion. Verify orifice size is correct. See Service Parts List for proper orifice sizing.
- Verify air shutter setting is correct. See Installation Manual for required air shutter setting. Verify air shutter is clear of dust and debris.
- Verify burner is properly secured and aligned with pilot or igniter.
- Clean off burner top, inspect for plugged ports, corrosion or deterioration. Replace burner if necessary.
- Inspect IPI flame sensing rod for soot, corrosion and deterioration. Polish with 320 grit Emery cloth and/or 3M™ Scotch-Brite Abrasive Hand Pad.
- Verify that there is not a short in flame sense circuit by checking continuity between pilot hood and flame sensing rod. Replace pilot as necessary.
- Verify manifold and inlet pressures. Adjust regulator as required.
- Check all accessible gas-carrying tubes, connections, pipes and other components for leaks.
- Inspect pilot flame pattern and strength. See Figure 4.18 for proper pilot flame pattern. Clean or replace orifice spud as necessary.
- Check for smooth lighting and ignition carryover to all ports. Verify that there is no ignition delay. Inspect and ensure the lighting of the main burner occurs within four seconds of the main gas valve opening.
- Inspect for lifting or other flame problems.

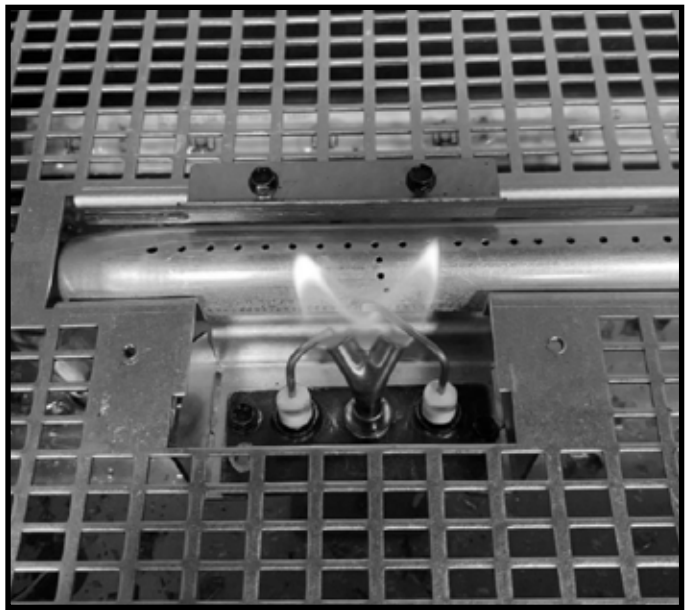

Figure 4.18 IPI Pilot Flame Patterns

Damper Inspection

Frequency: As needed

By: Qualified Service Technician

Tools needed: Protective gloves and safety glasses.

- Inspect functionality of damper. Ensure damper moves easily between open and closed positions.
- If damper does not function properly it must be replaced.

Damper Replacement

CAUTION! Risk of Burns!

- *The fireplace should be turned off and cooled before damper is installed.*
- *Shut off gas supply.*

1. Remove SafeSurface barrier glass.
2. Remove the media, transition panels, high temperature limit switch assembly, and transition media tray.
3. Remove the firebox glass. Locate Damper. See Figure 4.19.
4. Remove the five outer screws that hold the damper in place. Screw locations are shown in Figure 4.20. Support the damper as you remove the last screw.
5. Lower the damper from the firebox top noting its orientation. See Figure 4.20.
6. Verify that there is a new gasket installed on the replacement damper.
7. Insert the new damper into the opening in the top of the firebox. Attach with five screws. See Figure 4.20.
8. Replace the firebox glass, transition media tray, high temperature limit switch assembly, transition panels, transition media and SafeSurface barrier glass.

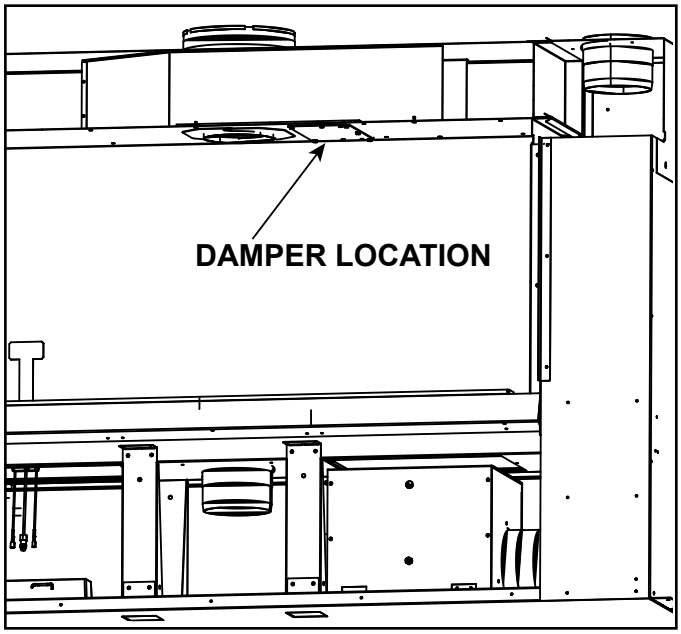

Figure 4.19 Damper Removal

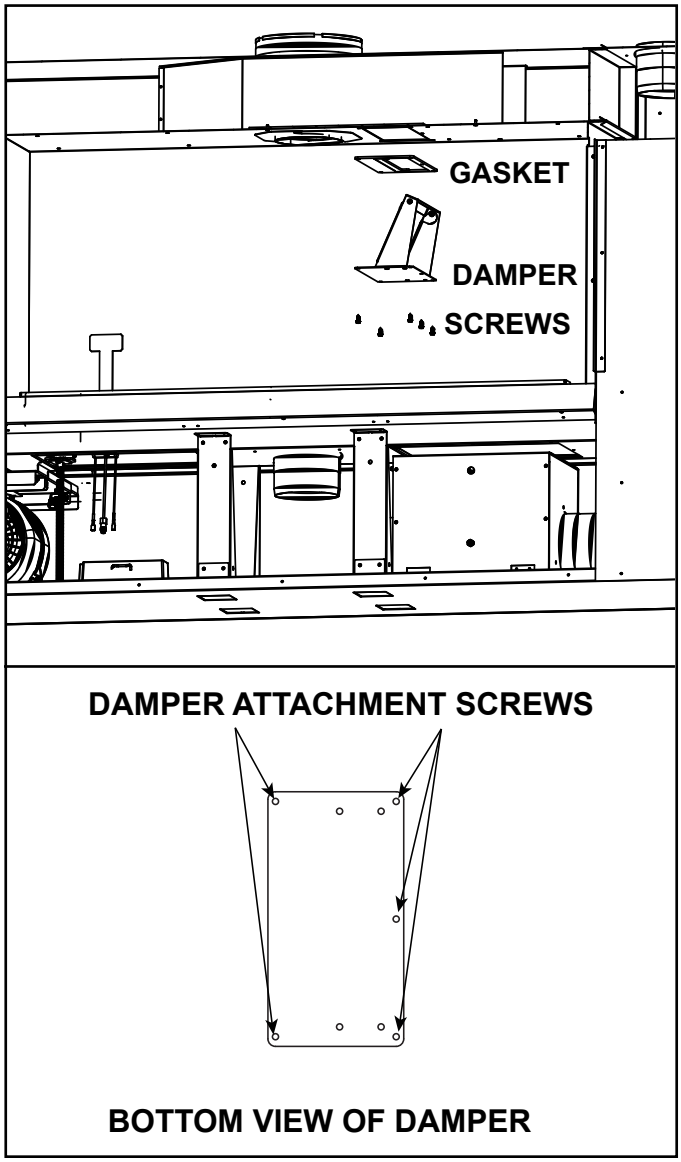

Figure 4.20 Damper Replacement

Electrical Service and Repair

WARNING! Risk of Shock! *Label all wires prior to disconnection when servicing controls. Wiring errors could cause improper and dangerous operation. Verify proper operation after servicing.*

WARNING! Risk of Shock! *Replace damaged wire with type 105º C rated wire. Wire must have high temperature insulation.*

5 Frequently Asked Questions and Troubleshooting

A. Frequently Asked Questions - Appliance

ISSUE	SOLUTIONS
Condensation on the glass	This is a result of gas combustion and temperature variations. Prior to appliance being turned on, the inside of the glass has cooled below the dew point producing a byproduct of combustion: water in the form of condensation. As the fireplace glass warms, the condensation will disappear. In the summer, the inside of your fireplace contains hot humid air from outdoors. When the air from outdoors contacts glass cooled below the dew point by your air conditioning, moisture in that air will condense.
Blue flames	This is a result of normal operation and the flames will begin to yellow as the fireplace is allowed to burn for 20 to 40 minutes.
Erratic flames	Verify that the glass assembly is correctly installed and that all glass latches are engaged over the tabs on the glass frame. Vent baffle/flue restrictor may be needed when long vertical vent runs are used. Refer to Installation Manual Section 4 Vent Diagrams.
Odor from fireplace	When first operated, this fireplace may release an odor for the first several hours. This is caused by the curing of the paint and the burning off of any oils remaining from manufacturing. Odor may also be released from finishing materials and adhesives used around the fireplace. These circumstances may require additional curing related to the installation environment.
Film on the glass	This is a normal result of the curing process of the paint and logs. Glass should be cleaned within 3 to 4 hours of initial burning to remove deposits left by oils from the manufacturing process. A non-abrasive cleaner such as gas fireplace glass cleaner may be necessary. Contact your dealer.
Metallic noise	Noise is caused by metal expanding and contracting as it heats up and cools down, similar to the sound produced by a furnace or heating duct. This noise does not affect the operation or longevity of the fireplace.
Is it normal to see the pilot flame burn continually?	No. The pilot flame should turn off when appliance is turned off. If the flame is off but the pilot is still running, it is possible that the temperature limit switch has tripped or the Cold Climate feature has been inadvertently turned on. Shut the fireplace off and contact your dealer.
Power Outages (battery backup)	This appliance does not have a battery backup function.
Wall above appliance feels hot to the touch.	Contact your dealer. The wall above the PRIMO appliance should remain slightly warm to the touch.
Cold air infiltration	Damper not functioning properly. Contact your dealer to have a Qualified service technician inspect damper and replace if necessary. Refer to Section 4.C for damper replacement instructions.

Contact your dealer for additional information regarding operation and troubleshooting. Visit www.heatnglo.com to locate a dealer.

B. Frequently Asked Questions - IntelliFire Touch® Controls (IFT2-RC450)

Symptom	Possible Cause	Corrective Action
The appliance does not respond to commands from the remote control display does not light up when screen is touched.	Batteries are depleted.	Verify batteries are new.
	Batteries are incorrectly oriented.	Verify batteries are installed in correct orientation as shown on batteries receptacle.
The display on remote lights up when screen is touched but it does not respond to commands.	Touchscreen has lost calibration.	Touchscreen needs to be re-calibrated. Call dealer to have screen re-calibrated.
	Child Lock is ON.	Check child lock icon located at the top of the remote display. If ON, it will show as a 'locked' symbol. To unlock, remove battery compartment door, locate child lock switch and move to 'unlock' position. Verify child lock icon on screen is now displayed in 'unlock' position.
The remote displays the following message on-screen: No dealer info available	Dealer information not programmed into remote.	Remote will still provide all available functions, and appliance is fully available for use. Call dealer to have them program.
The remote displays the following message on-screen: Call "Dealer Name & Number" to schedule maintenance.	300 hours of use. Appliance is still fully functional.	The appliance has been burning for 300 hours and is due for a regular maintenance. Call dealer to have them perform maintenance.
Thermostat mode is displayed on remote.	Thermostat mode has not been disabled.	Call your dealer.
The appliance turns OFF the flame after extended periods of operation	9 hour safety shutdown timer	This is normal behavior. The appliance has a safety timer that will automatically turn OFF the flame after nine hours of uninterrupted operation.
The remote displays the following message on-screen: Fan will turn on within 3 minutes	Functioning as intended.	The appliance has a three minute delay timer before the fan is turned ON. This allows the air surrounding the appliance to be heated before being pushed into the room.
The remote displays the following message on-screen: "Replace remote batteries."	Low batteries in remote.	Install new batteries in the remote.
The remote is displaying an incorrect brand.	Remote was programmed incorrectly.	Call dealer to have them program the remote with correct branding. Remote is still fully functional and the appliance is unaffected.
After turning flame ON using remote, the flame does not turn ON immediately and instead a two minute timer is displayed.	Power vent is installed on the appliance.	This is expected behavior and the two minute timer is called a pre-purge timer. The flame will turn ON at the expiration of the timer.
The remote displays the following message on-screen: "Remote Control Communication Error."	No power to appliance.	Verify home circuit breaker is on and master reset is on (if equipped).
	Power outage.	Wait for power to be restored to appliance.
The remote displays the following message on -screen: Sorry your appliance did not start. Try again by pressing Flame On.	No power to appliance. No gas to appliance. Accumulation of air in gas line from extended period of appliance inactivity. Gas control system failure.	Verify that appliance has power and gas. Verify that the appliance accepts flame ON commands with an audible beep, and successfully turns flame on within 90 seconds. If this failure persists, contact dealer for service.

C. Troubleshooting - IntelliFire Touch 2.0 Ignition System

DANGER

Risk of Explosion

DO NOT cycle the ON/OFF/REM selector switch more than one time within a five minute period. Gas may accumulate in firebox. Call a qualified service technician.

Troubleshooting

With proper installation, operation and maintenance your gas appliance will provide years of trouble-free service. If you do experience a problem, this troubleshooting guide will assist a qualified service technician in the diagnosis of a problem and the corrective action to be taken. This troubleshooting guide can only be used by a qualified service technician.

Note to Qualified Service Technician: Additional resources including troubleshooting guides and service videos are available through Hearth & Home Technologies. Contact your dealer or access resources through your myhht.com account.

IntelliFire Touch 2.0 Ignition System
Error Codes:

IFT2-ECM LED Error Codes	Description
2 Red: 1 Green	RC450 display: "Error Pilot Flame", pilot valve solenoid not detected or open pilot flame coil.
2 Red: 2 Green	CSA error message. Ignition feedback signal error, spark coil failure, low-impedance short.
3 Red: 1 Green	RC450 error message: "Appliance Safely Disabled", pilot sparks for 90 seconds, no flame rectification.
4 Red: 1 Green	110VAC power is connected to the wall switch.
6 Red: 1 Green	RC450 error message: "HM error". Clear Error Message requires the On/Off/Remote switch to be moved to Off for 3 seconds before moving back to Remote.
7 Red: 1 Green	RC450 display: "Error Power Vent" Clear Error Message requires the On/Off/Remote switch to be moved to Off for 3 seconds before moving back to Remote.
8 Red: 1 Green	RC450 error message: "ECM error".

See Troubleshooting matrix for more detail on Lock-out Error Codes, Possible Causes and Corrective Actions.

Troubleshooting:

NOTICE*! Please contact your Hearth & Home Technologies dealer if the Corrective Actions do not resolve the issues with your appliance.*

Symptom	Possible Cause	Corrective Action
Pilot does not light, module clicks but no spark 90 seconds, 3 Red/1 Green Lock out.	Incorrect wiring.	Verify "S" (White) sense wire and "I" (orange) ignitor wire are connected to correct terminals on IFT2-ECM.
	Loose connections or electrical shorts in wiring.	Verify no loose connections or electrical shorts in wiring from module to pilot assembly. Verify wire insulation is not damaged. Verify wires are not grounding out to chassis, pilot burner, or any other metal object. Replace any damaged wires.
	Ignitor gap is too large.	Verify spark gap is approximately 0.095" (2.41 mm) to 0.135" (3.43 mm).
Pilot does not light, there is no noise or spark.	No AC power, AC/DC adaptor faulty, IFT2-ECM slider switch in OFF position.	Verify IFT2-ECM slider switch is in ON or REMOTE position. Verify AC power available to junction box. Verify 6 VDC power adapter is plugged into junction box and IFT2-ECM. Verify 6 VDC power adapter output voltage is between 5.7-6.3 Vdc.
	Shorted or loose connection in system wiring or wiring harness.	Verify system wiring configuration. Remove and reinstall wiring harness that plugs into module. Check continuity of wires in valve wiring harness. Replace any damaged components.
	Poor or no system ground.	Verify black ground wire in valve harness is connected to metal chassis of fireplace.
Pilot does not light, there is no noise or spark, 2 Red/1 Green Lockout.	Pilot solenoid not detected.	Check if valve harness orange wire is connected to pilot solenoid valve. Check pilot solenoid resistance, nominal is 40 ohms. If open or shorted, replace valve. Check valve harness wire continuity, if open replace 6-pin harness.

Troubleshooting *(continued)*

Symptom	Possible Cause	Corrective Action
Pilot does not light, there is no noise or spark, 2 Red/2 Green Lockout.	Spark coil failure.	Replace IFT2-ECM.
Pilot sparks but does not light, after 90 seconds, 3 Red/1 Green Lockout.	No gas supply.	Verify incoming gas line ball valve is “Open”. Verify inlet pressure is within requirement for gas type used. Contact gas supplier.
	IFT2-ECM has poor ground.	Verify wiring, check valve harness black wire is securely grounded to metal chassis.
	Gas valve defective.	Check pilot valve solenoid kick and hold voltages during ignition cycle. Kick V should be >1 V, hold V minimum 0.26 V. If voltages are OK, replace gas valve.
Pilot lights but main burner does not light. Pilot continues to spark for 90 seconds then goes into 3 Red/1 Green Lockout.	No flame detected. Flame rectification issue.	Check if white sense lead is securely connected to “S” terminal of IFT2-ECM. Check resistance of sense lead between sense rod tip and connector to IFT2-ECM, should be less than 1 ohm - if not, replace pilot assembly. Check system ground, ensure black valve harness wire is securely attached to metal chassis. Check wiring for damage. With system OFF, check resistance between tip of sense rod and pilot hood, should be resistance (>1 M-ohm).
	Possible Cause: No flame detected or sense rod contamination.	Corrective Action: With glass assembly installed, verify pilot flame is engulfing flame sense rod on pilot assembly. Verify inlet gas pressure is correct for gas type. Polish flame sense rod with fine steel wool to remove any contaminants that may have accumulated.
	No flame detected, sense rod short issue.	Remove firebox glass assembly and verify there is no glass media touching the flame sense rod or glass media blocking the pilot orifice.
Pilot lights and rectifies, but main burner does not light.	Main valve solenoid.	Check if green wire in valve harness is connected to green main valve solenoid. Check main valve solenoid resistance, nominal is 60 ohms. If open or shorted, replace valve. Verify valve inlet pressure is correct for gas type.
Pilot and main do not light, IFT2-ECM 2.0 goes into 7 Red/1 Green Lockout.	Combustion Blower Failure.	Combustion blower defective - check wiring to IFT2-PACM, check if combustion blower is working. Check if pressure switch is connected to brown and black wire in 6-pin valve wire harness. Check if pressure switch is closed (shorted) when combustion blower is running. Clear Error Message requires the On/Off/Remote switch to be moved to Off for 3 seconds before moving back to Remote.
Appliance lights and runs for a few minutes then shuts down and/or appliance cycle ON and OFF with less than 90 seconds of ON time.	Shorted or loose connection in flame detection circuit.	Check if white sense lead is securely connected to “S” terminal of IFT2-ECM. Check resistance of sense lead between sense rod tip and connector to IFT2-ECM should be less than 1 ohm - if not, replace pilot assembly. Check system ground, ensure black valve harness wire is securely attached to metal chassis. Check wiring for damage. With system OFF, check resistance between tip of sense rod and pilot hood, should be resistance (>1 M-ohm).
	Poor flame rectification or contaminated sense rod.	With glass assembly installed, verify pilot flame is engulfing flame sense rod on pilot assembly. Verify inlet gas pressure is correct for gas type. Polish flame sense rod with fine steel wool to remove any contaminants that may have accumulated. Verify no soot deposits are in sense rod to pilot hood gap.
	Logs are set up wrong.	Remove and re-install logs per the log placement instructions.
	Damaged pilot assembly.	Verify the pilot assembly ceramic insulator around the flame sensing rod is not cracked, damaged or loose. Check resistance between tip of sense rod and IFT2-ECM connector, should be less than 1 ohm. Replace pilot assembly if damage is detected.

D. Troubleshooting - Appliance

Symptom	Possible Cause	Corrective Action
Unit main burner cycles ON/OFF under normal operation. High temperature limit switch tripping.	Inlet air restricted or blocked.	Inspect Outside Air Kit opening to verify vent cover and ducting is unobstructed. Verify venting is free of any folds/kinks/pinches which could restrict airflow.
	Exhaust restricted.	Verify flue adjuster is set in accordance with appliance Installation Manual. Verify damper is functioning properly. Inspect exhaust cap to ensure no blockage is present and proper clearances are maintained.
	Improper SafeSurface barrier glass gap.	Verify 5/16” glass gap is present for installed SafeSurface barrier glass and barrier glass retainer clips are properly installed. See Figure 4.10.
	Firebox glass not sealed properly.	Verify firebox glass is installed and secured properly as called out in the appliance Installation Manual. Verify glass gasketing is not compromised. Replace glass if necessary.
	Convection blower failure.	Check wiring connections and verify convection blower is operating when appliance is commanded ON. Replace blower if faulty.
	Low input voltage to appliance.	Verify appliance has minimum 110VAC input to the appliance junction box. Bypass rheostat, if not already completed for long vent run requirements, per instructions in the appliance Installation Manual.
	The gap in the gas access or electrical access hole was not sealed.	Verify that the gas and electrical access holes have been sealed with caulk or aluminum foil tape with a minimum of 300 ºF continuous exposure rating or stuffed with non-combustible, unfaced insulation.
Pilot and main do not light, ECM goes into 6 Red/1Green Lockout.	Heat Management (HM) Failure	Heat Management blower defective. Check wiring to IFT-ACM or IFT-PACM. Check if blower is receiving power from the IFT control and freely spinning.

6 Reference Materials

A. Accessories

WARNING! Risk of Fire and Electric Shock! *Use ONLY Hearth & Home Technologies-approved optional accessories with this appliance. Using non-listed accessories could result in a safety hazard and will void the warranty.*

Contact your dealer for more information and details, such as color options, on individual accessories. A qualified service technician must install the approved accessories. Operate installed accessories according to the included instructions.

Note: Some optional accessories must be installed at the time of appliance installation.
Refer to appliance Installation Manual Section 2.A, Design and Installation Considerations.

Options:

Remote Controls, Wall Controls and Wall Switches	
IFT-RC150U	IntelliFire Touch wireless wall switch
IFT2-RC450	IntelliFire Touch remote control (Shipped standard)
IntelliFire Wi-Fi module with IntelliFire App	
IFT-WFM	IntelliFire Touch Wi-Fi module
SafeSurface Barrier Glass (Required for Operation)	
GLASS-SS-48 / GLASS-SS-60 / GLASS-SS-72	SafeSurface Barrier Glass Quantity 2 required for See-Through models
Refractory Kit (Required for Operation)	
BGK-MAR-PR-48 / BGK-MAR-PR-60 / BGK-MAR-PR-72 / BGK-MAR-PR-ST	Marbled Glass Liner
BGK-PR-48 / BGK-PR-60 / BGK-PR-72 / BGK-PR-ST	Black Glass Liner
BGK-FL-PR-48 / BGK-FL-PR-60 / BGK-FL-PR-72 / BGK-FL-PR-ST	Fluted Glass Liner
ACT-PR-48 / ACT-PR-60 / ACT-PR-72 / ACT-PR-ST	Architectural Stone Refractory
COL-PR-48 / COL-PR-60 / COL-PR-72 / COL-PR-ST	Stone Column Fiber Refractory
Trap Cap Adapter Kit (Required for all horizontally terminated installations)	
HZTERM-ADP	Horizontal Termination Adapter Kit
Heat Management Systems Kits	
PRIMO-HEAT-DUCT	Heat Duct Kit
Glass Media (Required to Complete)	
MEDIA-CP (5 lb bag)	Crushed glass media - Copper
MEDIA-CY (5 lb bag)	Crushed glass media - Crystal
MEDIA-GT (5 lb bag)	Crushed glass media - Graphite
MEDIA-SM (5 lb bag)	Crushed glass media - Smoked Embers Reference appliance Installation Manual or contact dealer for total media purchase requirements
Stone media	
STONES-48 / STONES-60 / STONES-72	Stone Media Installation of glass media required with all stone media kits
Log Sets	
BIRLG-LIN-SM / BIRLG-LIN-LG	Birch Logs 48 / 60 / 72
DWLG-LIN-SM / DWLG-LIN-LG	Driftwood Logs 48 / 60 / 72
OAKLG-LIN-SM / OAKLG-LIN-LG	Oak Logs 48 / 60 / 72 Installation of glass media required with all log sets
Indoor / Outdoor Kit (See-Through Models Only)	
ODK-PR-48 / ODK-PR-60 / ODK-PR-72	Outdoor Kit
Appliance Carry Handle	
CARRY-HANDLE	Quantity 1 handle per kit

B. Service Parts

48” Gas Fireplace - DV

PRIMO-II-48

Beginning Manufacturing Date: Jun 2023
Ending Manufacturing Date: Active

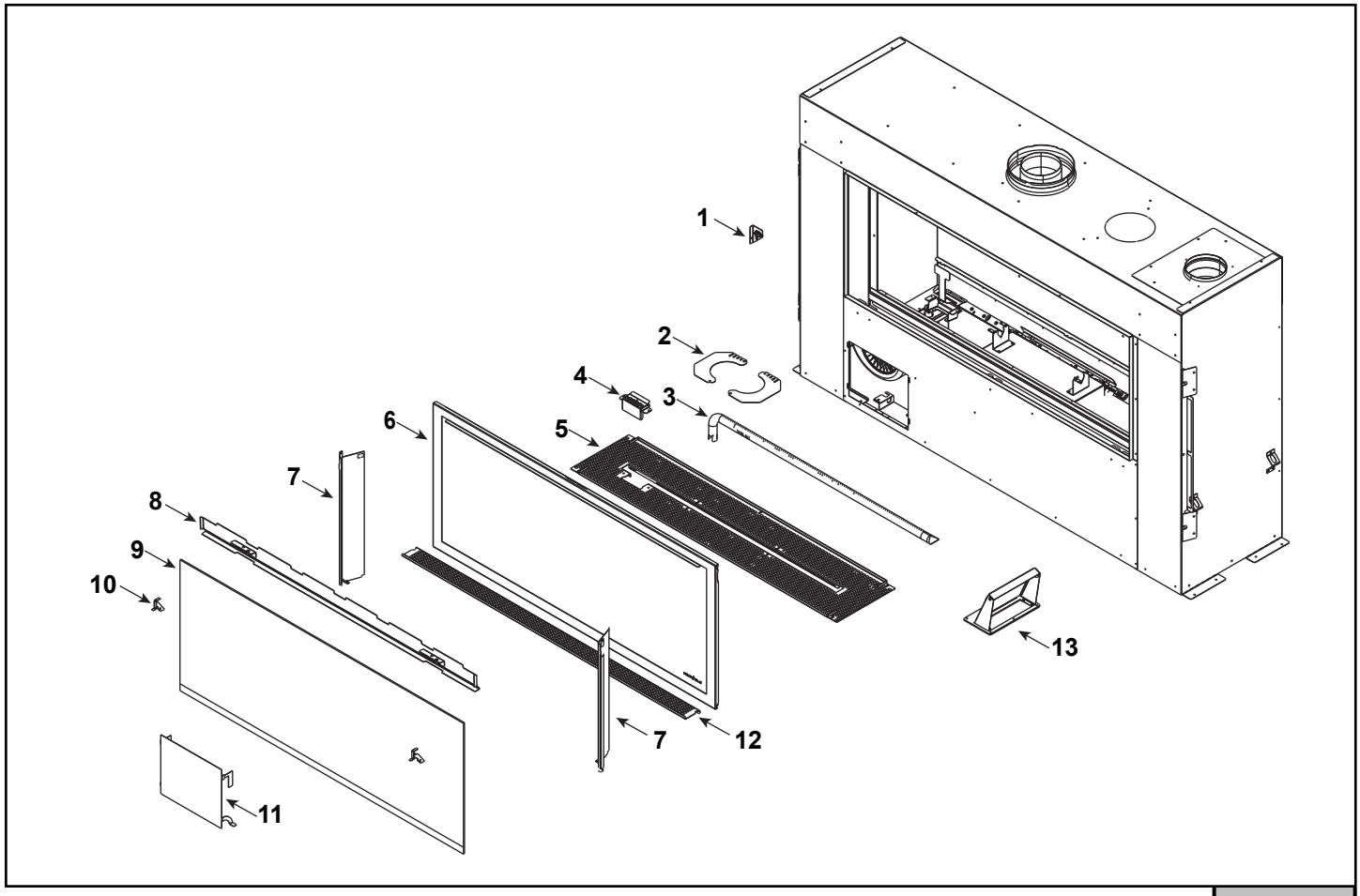

IMPORTANT: THIS IS DATED INFORMATION. Parts must be ordered from a dealer or distributor. **Hearth and Home Technologies does not sell directly to consumers.** Provide model number and serial number when requesting service parts from your dealer or distributor.

ITEM	DESCRIPTION	COMMENTS	PART NUMBER	Stocked at Depot
1	180°F Limit Switch Assembly		2670-015	**Y**
2	Exhaust Restrictor	Qty 2 req	2670-226	
3	90 Degree Burner Tube, 48”		SRV2670-162	**Y**
4	Shield, Pilot	NG	2670-135	
		Propane	2670-173	
5	Tray, 48” Media		2670-194	
6	Glass Assembly		GLA2670-019	**Y**
7	Transition, Left & Right Glass		SRV2670-285	**Y**
8	Glass Retainer Bar		2670-042	
9	Safe Surface Glass, 48”		GLASS-SS-48	
10	Retainer, Cool Glass	3 Sets	2670-157	
11	Plate, Access Hole Cover		2670-124	
12	Tray, Cool Touch Media		2670-134	
13	Damper Assembly		2670-069	
	Gasket, Damper		2670-178	

Additional service part numbers on following page.

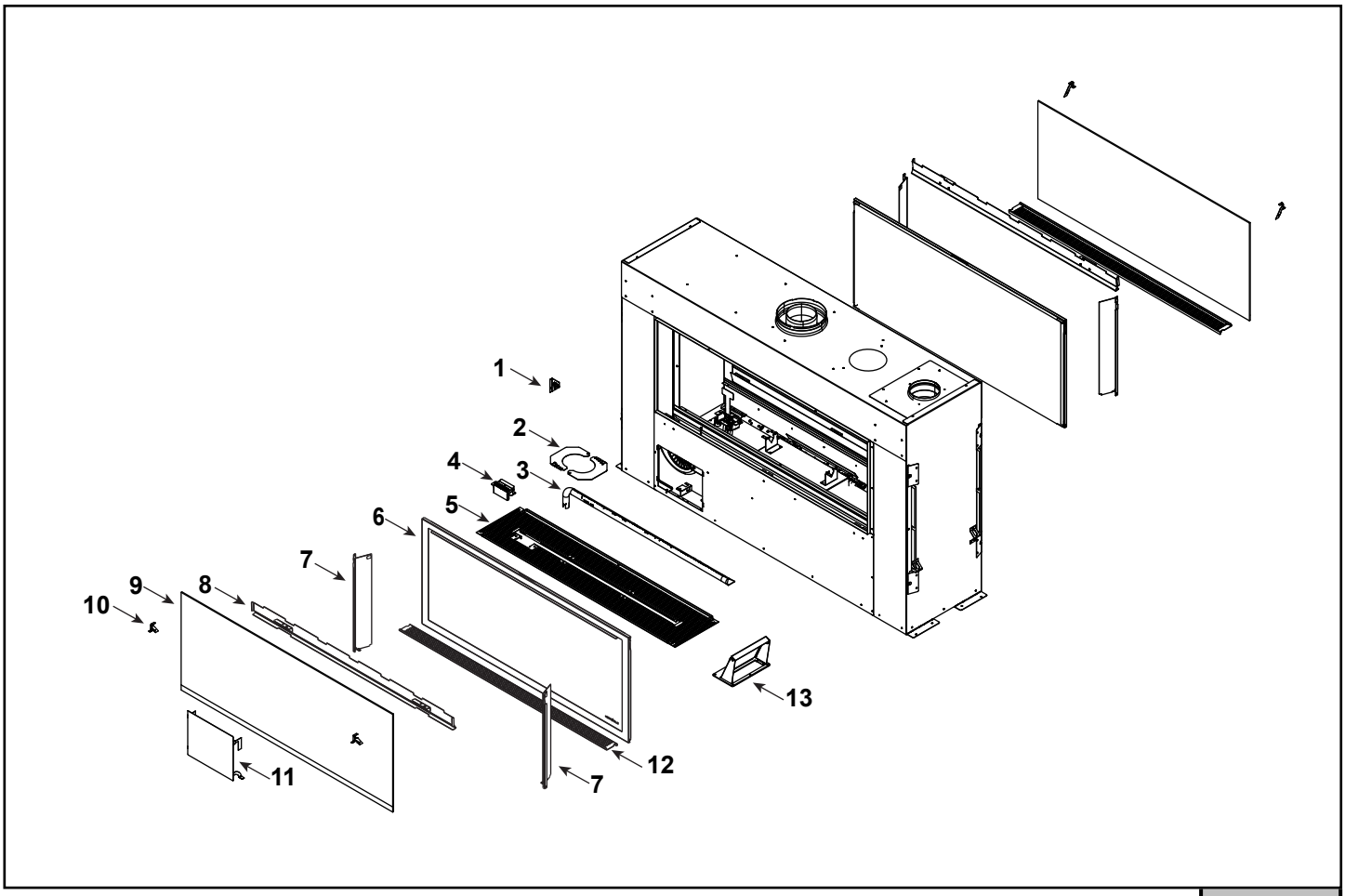

IMPORTANT: THIS IS DATED INFORMATION. Parts must be ordered from a dealer or distributor. **Hearth and Home Technologies does not sell directly to consumers.** Provide model number and serial number when requesting service parts from your dealer or distributor.

ITEM	DESCRIPTION	COMMENTS	PART NUMBER	Stocked at Depot
1	180°F Limit Switch Assembly		2670-015	Y
2	Exhaust Restrictor	Qty 2 req	2670-226	
3	90 Degree Burner Tube, 48”		SRV2670-162	Y
4	Shield, Pilot	NG	2670-135	
		Propane	2670-173	
5	Tray, 48” Media		2670-194	
6	Glass Assembly	Qty 2 req	GLA2670-019	Y
7	Transition, Left & Right Glass	Qty 2 req	SRV2670-285	Y
8	Glass Retainer Bar	Qty 2 req	2670-042	
9	Safe Surface Glass, 48”	Qty 2 req	GLASS-SS-48	
10	Retainer, Cool Glass	3 Sets	2670-157	
11	Plate, Access Hole Cover		2670-124	
12	Tray, Cool Touch Media		2670-134	Y
13	Damper Assembly		2670-069	
	Gasket, Damper		2670-178	

Additional service part numbers on following page.

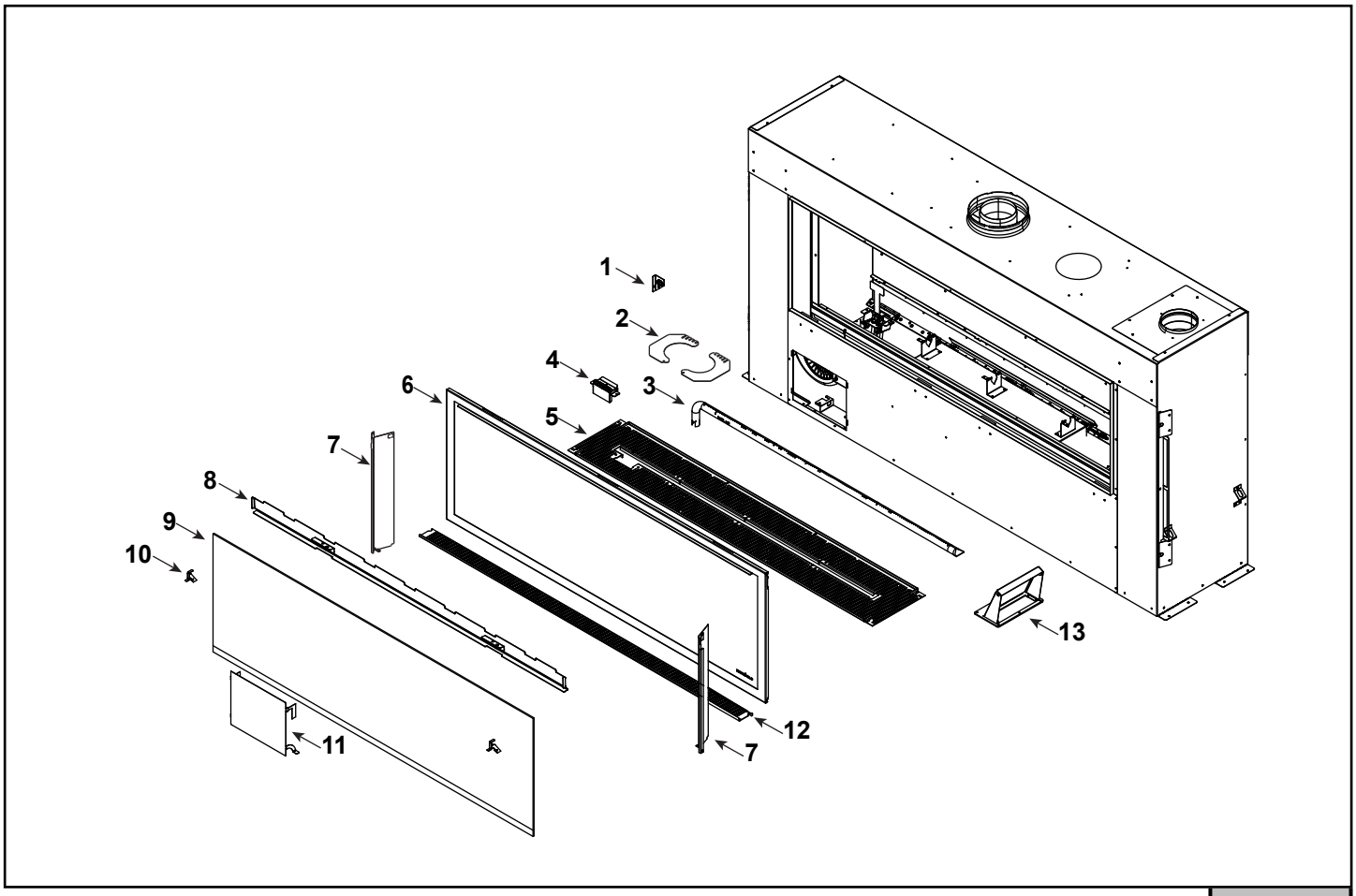

IMPORTANT: THIS IS DATED INFORMATION. Parts must be ordered from a dealer or distributor. **Hearth and Home Technologies does not sell directly to consumers.** Provide model number and serial number when requesting service parts from your dealer or distributor.

ITEM	DESCRIPTION	COMMENTS	PART NUMBER	Stocked at Depot
1	180°F Limit Switch Assembly		2670-015	Y
2	Exhaust Restrictor	Qty 2 req	2670-226	
3	90 Degree Burner Tube, 60”		SRV2672-162	Y
4	Shield, Pilot	NG	2670-135	
		Propane	2670-173	
5	Tray, 60” Media		2672-194	
6	Glass Assembly		GLA2672-019	Y
7	Transition, Left & Right Glass		SRV2670-285	Y
8	Glass Retainer Bar		2672-042	
9	Safe Surface Glass, 60”		GLASS-SS-60	
10	Retainer, Cool Glass	3 Sets	2670-157	
11	Plate, Access Hole Cover		2670-124	
12	Tray, Cool Touch Media		2672-134	
13	Damper Assembly		2670-069	
	Gasket, Damper		2670-178	

Additional service part numbers on following page.

HEAT&GLO®

No one builds a better fire

Service Parts

60” Gas Fireplace - DV

PRIMO-II-60ST

Beginning Manufacturing Date: Jun 2023

Ending Manufacturing Date: Active

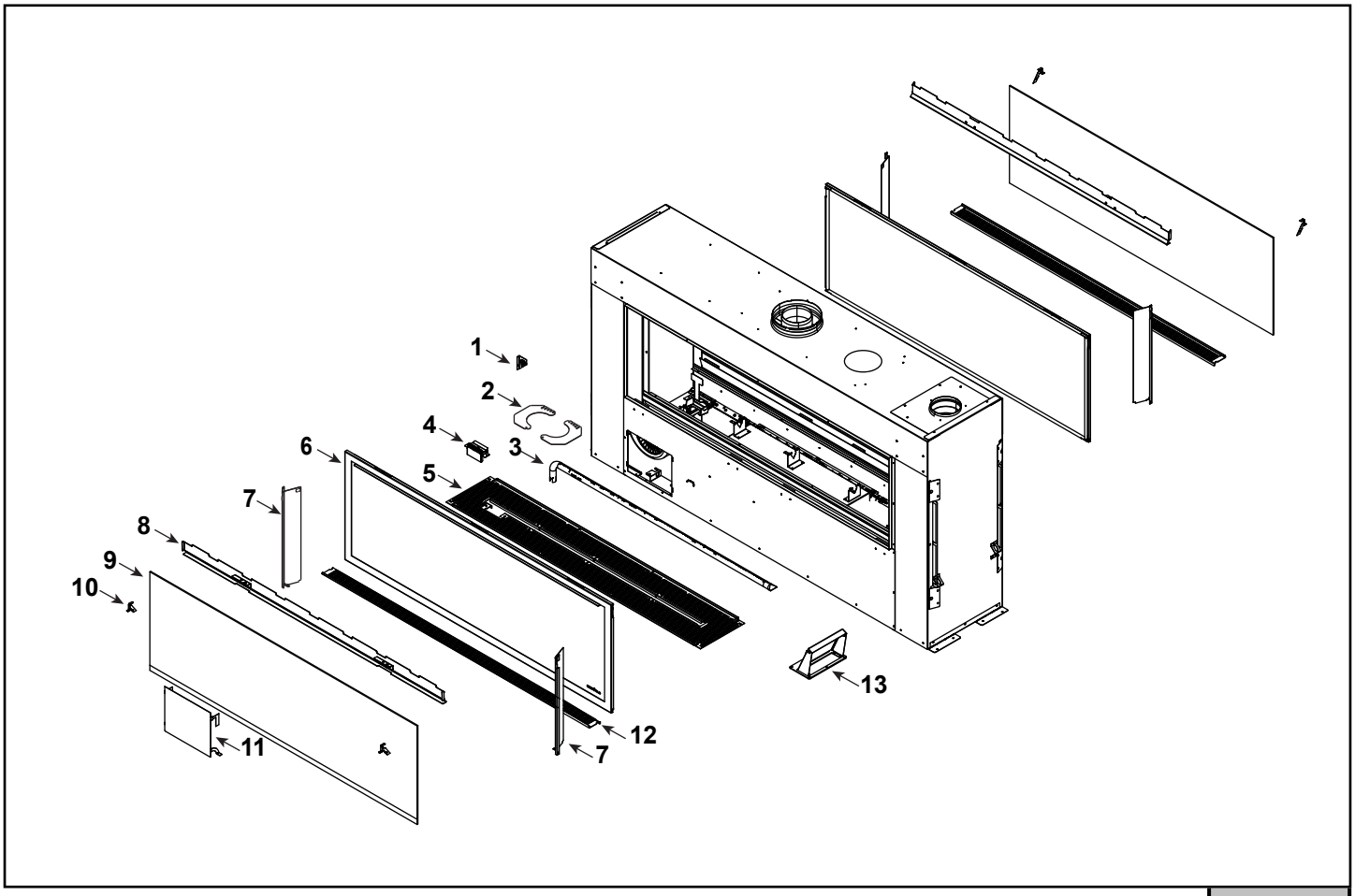

IMPORTANT: THIS IS DATED INFORMATION. Parts must be ordered from a dealer or distributor. **Hearth and Home Technologies does not sell directly to consumers.** Provide model number and serial number when requesting service parts from your dealer or distributor.

ITEM	DESCRIPTION	COMMENTS	PART NUMBER	Stocked at Depot
1	180°F Limit Switch Assembly		2670-015	Y
2	Exhaust Restrictor	Qty 2 req	2670-226	
3	90 Degree Burner Tube, 60”		SRV2672-162	Y
4	Shield, Pilot	NG	2670-135	
		Propane	2670-173	
5	Tray, 60” Media		2672-194	
6	Glass Assembly	Qty 2 req	GLA2672-019	Y
7	Transition, Left & Right Glass	Qty 2 req	SRV2670-285	Y
8	Glass Retainer Bar	Qty 2 req	2672-042	
9	Safe Surface Glass, 60”	Qty 2 req	GLASS-SS-60	
10	Retainer, Cool Glass	3 Sets	2670-157	
11	Plate, Access Hole Cover		2670-124	
12	Tray, Cool Touch Media		2672-134	
13	Damper Assembly		2670-069	
	Gasket, Damper		2670-178	

Additional service part numbers on following page.

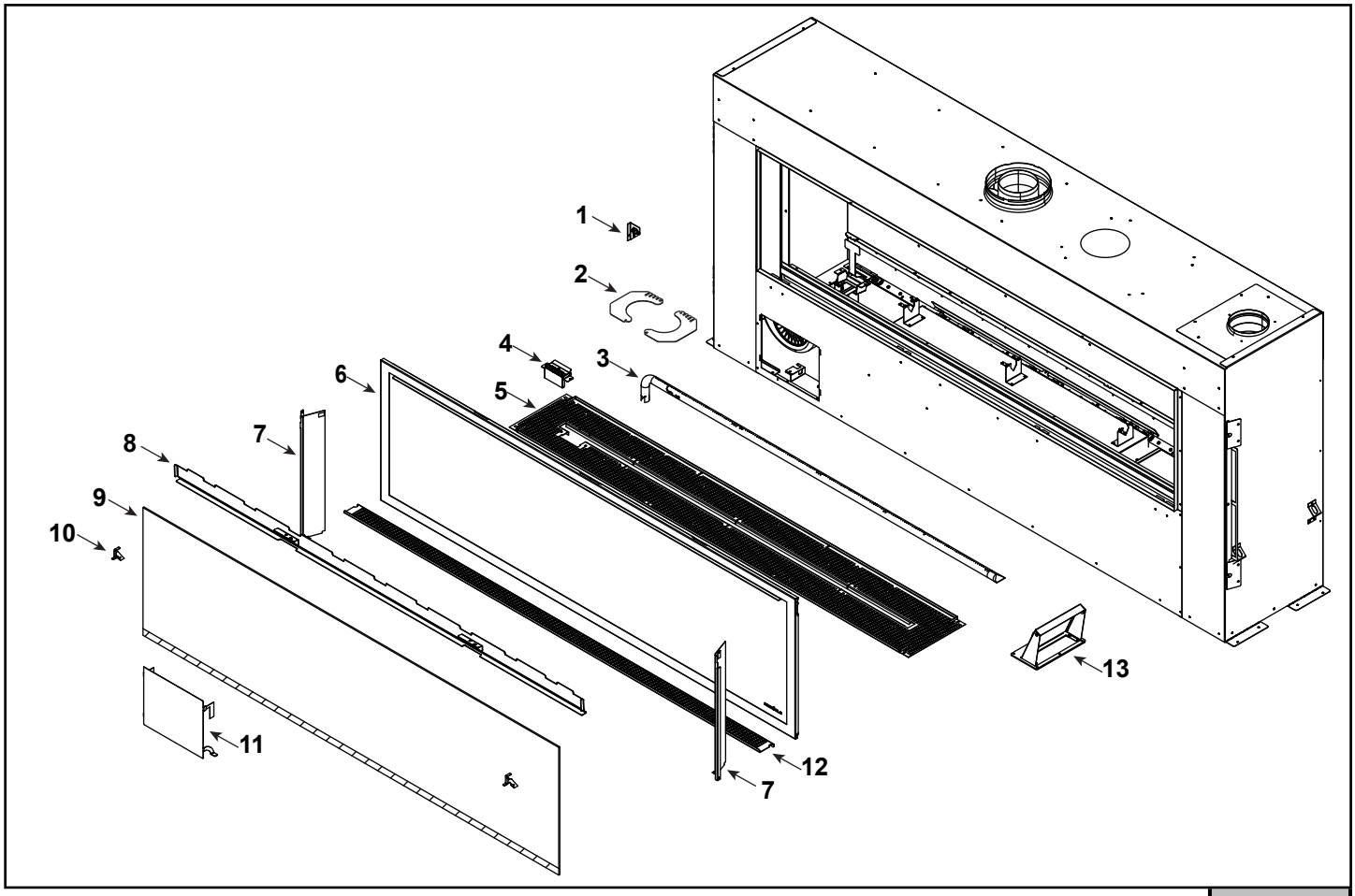

IMPORTANT: THIS IS DATED INFORMATION. Parts must be ordered from a dealer or distributor. **Hearth and Home Technologies does not sell directly to consumers.** Provide model number and serial number when requesting service parts from your dealer or distributor.

ITEM	DESCRIPTION	COMMENTS	PART NUMBER	Stocked at Depot
1	180°F Limit Switch Assembly		2670-015	Y
2	Exhaust Restrictor	Qty 2 req	2670-226	
3	90 Degree Burner Tube, 72”		SRV2674-162	Y
4	Shield, Pilot	NG	2670-135	
		Propane	2670-173	
5	Tray, 72” Media		2674-194	
6	Glass Assembly		GLA2674-019	Y
7	Transition, Left & Right Glass		SRV2670-285	Y
8	Glass Retainer Bar		2674-042	
9	Safe Surface Glass, 72”		GLASS-SS-72	
10	Retainer, Cool Glass	3 Sets	2670-157	
11	Plate, Access Hole Cover		2670-124	
12	Tray, Cool Touch Media		2674-134	
13	Damper Assembly		2670-069	
	Gasket, Damper		2670-178	

Additional service part numbers on following page.

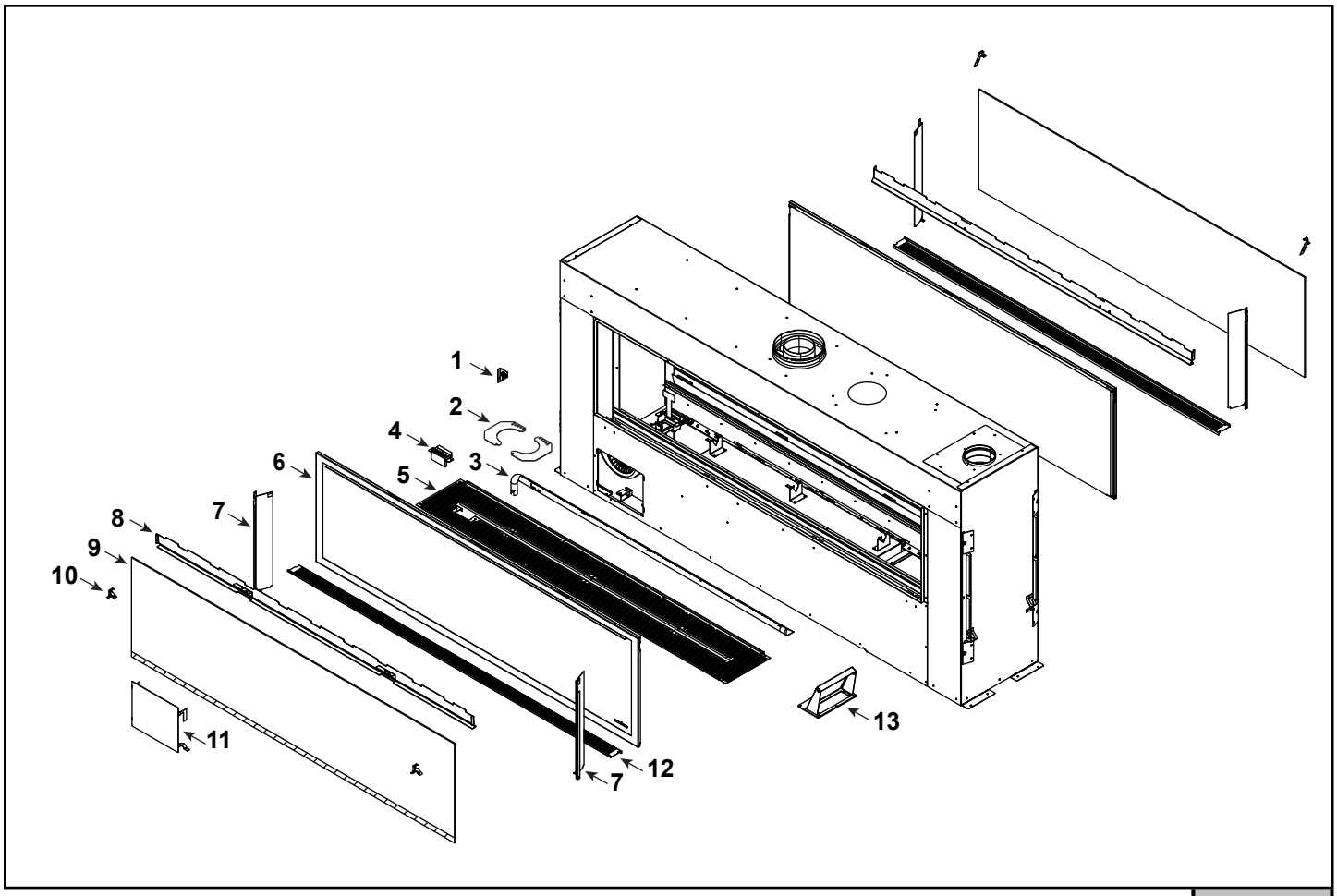

IMPORTANT: THIS IS DATED INFORMATION. Parts must be ordered from a dealer or distributor. **Hearth and Home Technologies does not sell directly to consumers.** Provide model number and serial number when requesting service parts from your dealer or distributor.

ITEM	DESCRIPTION	COMMENTS	PART NUMBER	Stocked at Depot
1	180°F Limit Switch Assembly		2670-015	Y
2	Exhaust Restrictor	Qty 2 req	2670-226	
3	90 Degree Burner Tube, 72”		SRV2674-162	Y
4	Shield, Pilot	NG	2670-135	
		Propane	2670-173	
5	Tray, 72” Media		2674-194	
6	Glass Assembly	Qty 2 req	GLA2674-019	Y
7	Transition, Left & Right Glass	Qty 2 req	SRV2670-285	Y
8	Glass Retainer Bar	Qty 2 req	2674-042	
9	Safe Surface Glass, 72”	Qty 2 req	GLASS-SS-72	
10	Retainer, Cool Glass	3 Sets	2670-157	
11	Plate, Access Hole Cover		2670-124	
12	Tray, Cool Touch Media	Qty 2 req	2674-134	
13	Damper Assembly		2670-069	
	Gasket, Damper		2670-178	

Additional service part numbers on following page.

IMPORTANT: THIS IS DATED INFORMATION. Parts must be ordered from a dealer or distributor. **Hearth and Home Technologies does not sell directly to consumers.** Provide model number and serial number when requesting service parts from your dealer or distributor.

ITEM	DESCRIPTION	COMMENTS	PART NUMBER	Stocked at Depot

PRIMO-II-48

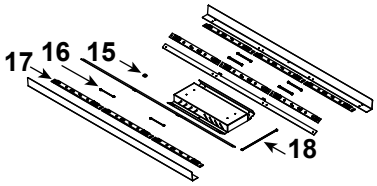

PRIMO-II-60

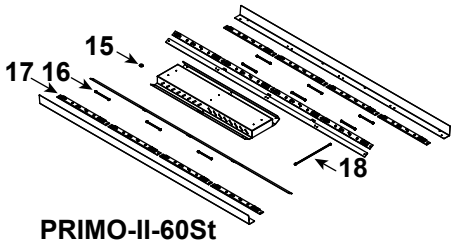

PRIMO-II-72

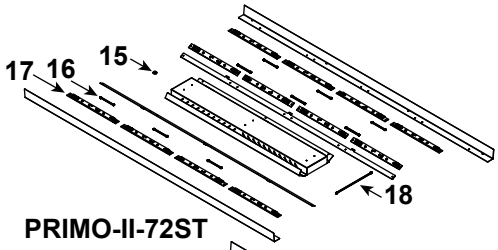

PRIMO-II-48ST

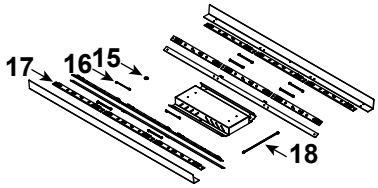

PRIMO-II-60St

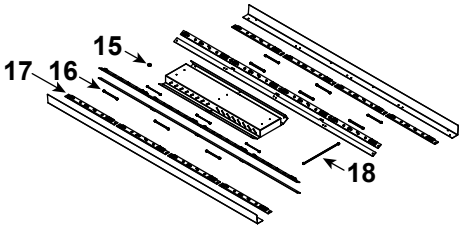

PRIMO-II-72ST

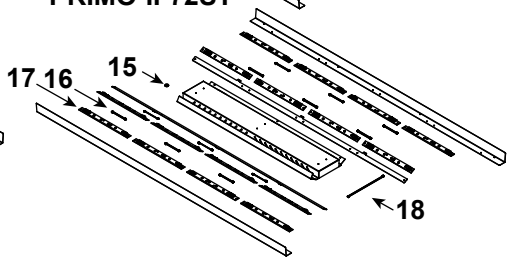

15	Grommet with 1/8” Opening		2003-300	
16	LED Wire Harness (between LED strips, 4 inch)	PRIMO-II-48, qty 6 req PRIMO-II-48ST, qty 8 req PRIMO-II-60, qty 9 req PRIMO-II-60ST, qty 12 req PRMO-II-72, qty 9 req PRIMO-II-72ST, qty 12 req	2300-753	**Y**
17	LED Board and Strip Assembly	PRIMO-II-48, qty 9 req PRIMO-II-48ST, qty 12 req PRIMO-II-60, qty 12 req PRIMO-II-60ST, qty 16 req PRMO-II-72, qty 12 req PRIMO-II-72ST, qty 16 req	2310-062	**Y**
18	LED Wire Harness	10 inch	2670-753	**Y**

#Fan Assembly

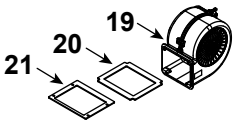

19	Fan Assembly	Qty 2 req	SRV2670-170	**Y**
20	Combustion Fan Gasket	Qty 2 req	2670-186	
21	Convection Fan Gasket	Qty 2 req	2670-080	
	Outside Air Kit		2670-085	
	Collar Gasket		2670-163	
	Bracket Assembly (includes 4 refractory clips & 6 refractory spacers)		2670-245	
	Touch-up Paint		TUP-GBK-12	

Additional service part numbers on following page.

IMPORTANT: THIS IS DATED INFORMATION. Parts must be ordered from a dealer or distributor. **Hearth and Home Technologies does not sell directly to consumers.** Provide model number and serial number when requesting service parts from your dealer or distributor.

#22 Valve Assembly

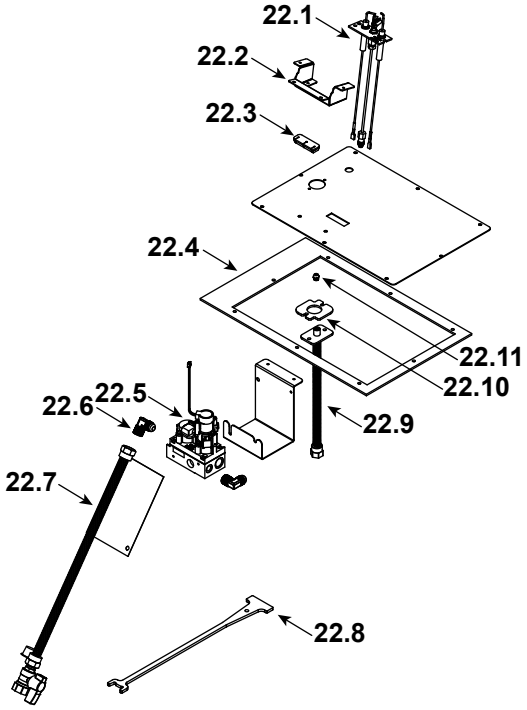

ITEM	DESCRIPTION	COMMENTS	PART NUMBER	Stocked at Depot
22.1	Pilot Assembly	NG	2406-012	Y
		Propane	2090-013	Y
22.2	Pilot Bracket		2670-116	
22.3	3-Hole Grommet		SRV2118-420	
22.4	Gasket, Valve Plate		2670-159	
22.5	Valve	NG	SRV2166-302	Y
		Propane	2166-303	Y
22.6	Elbow	Qty 2 req	SRV4021-045	Y
22.7	Flexline, 18” w/Ball Valve		2098-320a	Y
22.8	Tool, Gas Valve		2670-270	
22.9	Buklhead, Flexible		4021-512	Y
22.10	Burner Neck Gasket		2025-407	Y
22.11	Orifice, NG #30	Primo-II-48/48ST	582-830	Y
	Orifice, Propane #48		SRV582-848	Y
	Orifice, NG #26	Primo-II-60/60ST	582-826	Y
	Orifice, Propane #45		SRV582-845	Y
	Orifice, NG #23	Primo-II-72/72ST	582-823	Y
	Orifice, Propane #44		582-844	Y

Additional service part numbers on following page.

IMPORTANT: THIS IS DATED INFORMATION. Parts must be ordered from a dealer or distributor. **Hearth and Home Technologies does not sell directly to consumers.** Provide model number and serial number when requesting service parts from your dealer or distributor.

ITEM	DESCRIPTION	COMMENTS	PART NUMBER	Stocked at Depot
	150°F Limit Switch, Assembly		2670-014	Y
	Component Tray		2670-139	
	Touch-Up Paint		TUP-GBK-12	Y
	Wire Harness, Temp Disk	A complete wiring schematic is located in the Installation Manual	2670-031	Y
	Harness, Wire Extension (42”)		2670-032	Y
	Rheostat Assembly, 110 VAC		2670-171	Y
	Pressure Switch		2670-198	Y
	Wire Harness, PACM to Rheostat		2670-201	Y
	Wire Harness, PACM to Convection Fan		2670-219	Y
	LED 40 Watt Power Supply		2326-113	Y
	Harness, IFT 6 Pin Wiring		SRV2326-132	Y
	Cable, B Type AC Module		SRV2326-152	Y
	36” Male/Female Wire Assembly		2326-185	Y
	Junction Box		SRV2326-013	Y
	Transformer, 6 Volt Wall (NG Only)		SRV2326-131	Y
	Transformer, 6 Volt Wall (Propane Only)		2326-191	Y
	RC150 Remote Assembly		SRV2564-100	Y
	RC450 Remote Assemlby		SRV2564-110	Y
	Module, RF FCC		SRV2564-120	Y
	Module, Control		SRV2564-130	Y
	AUX Module, PACM		SRV2564-155	Y
	Reset Switch (Propane Only)		SRV2206-298	Y
	Wire Assembly, Reset Switch (Propane Only, Qty 2 req)		SRV34937	Y
Conversion Kits				
	Conversion Kit NG		NGK-PRIMOII	Y
	Conversion Kit Propane		LPK-PRIMOII	Y
	Pilot Orifice, NG		SRV593-528	Y
	Pilot Orifice, Propane		SRV593-527	Y
	Regulator, NG	With Stepper Motor	NGK-DXV-50	Y
	Regulator, Propane	With Stepper Motor	SRVLPK-DXV-50	Y

IMPORTANT: THIS IS DATED INFORMATION. Parts must be ordered from a dealer or distributor. **Hearth and Home Technologies does not sell directly to consumers.** Provide model number and serial number when requesting service parts from your dealer or distributor.

ITEM	DESCRIPTION	COMMENTS	PART NUMBER	Stocked at Depot
Required to Complete Accessories				
	Refractory Kit, Primo-II-48	Black Glass	BGK-PR-48	
		Fluted Glass	BGK-FL-PR-48	
		Architectural Stone	ACT-PR-48	
		Stone Column	COL-PR-48	
		Marble Glass	BGK-MAR-PR-48	
	Refractory Kit, Primo-II-60	Black Glass	BGK-PR-60	
		Fluted Glass	BGK-FL-PR-60	
		Architectural Stone	ACT-PR-60	
		Stone Column	COL-PR-60	
		Marble Glass	BGK-MAR-PR-60	
	Refractory Kit, Primo-II-72	Black Glass	BGK-PR-72	
		Fluted Glass	BGK-FL-PR-72	
		Architectural Stone	ACT-PR-72	
		Stone Column	COL-PR-72	
		Marble Glass	BGK-MAR-PR-72	
	Refractory Kit, Two Sided (Primo-II-48ST/60ST/72ST)	Black Glass	BGK--PR-ST	
		Fluted Glass	BGK-FL-PR-ST	
		Architectural Stone	ACT-PR-ST	
		Stone Column	COL-PR-ST	
		Marble Glass	BGK-MAR-PR-ST	
	Crushed Glass Media (5lb bag)	Copper	MEDIA-CP	
		Crystal	MEDIA-CY	
		Graphite	MEDIA-GT	
		Smoked Embers	MEDIA-SM	
	Stone Media	Primo-II-48/-48ST	STONES-48	
		Primo-II-60/-60ST	STONES-60	
		Primo-II-72/-72ST	STONES-72	

C. Contact Information

HEAT&GLO

No one builds a better fire

Heat & Glo, a brand of Hearth & Home Technologies
7571 215th Street West, Lakeville, MN 55044
www.heatnglo.com

Please contact your Heat & Glo dealer with any questions or concerns.
For the location of your nearest Heat & Glo dealer,
please visit www.heatnglo.com.

- NOTES -

_____

_____

_____

_____

_____

_____

_____

_____

_____

NOTICE

DO NOT DISCARD THIS MANUAL

- Important operating and maintenance instructions included.
- Read, understand and follow these instructions for safe installation and operation.
- Leave this manual with party responsible for use and operation.

This product may be covered by one or more of the following patents: (United States) 7077122, 7074035, 7234932, 7322819, 7422011, 7726300, 8147240, 9625149 or other U.S. and foreign patents pending.

2000-945F

Printed in U.S.A. - Copyright 2024