Non-Confidential Business Information (Non-CBI)

Certification Test Report

Hearth and Home Technologies
Wood-Fired Freestanding Room Heater (Catalytic)
Model: Intrepid FlexBurn 2115-CAT

Prepared for:	Hearth and Home Technologies 352 Mountain House Road Halifax, PA 17032
Prepared by:	OMNI-Test Laboratories, Inc. 13327 NE Airport Way Portland, OR 97230 (503) 643-3788
Test Period:	January 3, 2018 – January 16, 2018
Report Date:	March 2018
Report Revision Date:	February 7, 2023
Report Number:	0135WS038E (Catalytic)
Project Number:	0135WS038E (Catalytic)

All data and information contained in this report are confidential and proprietary to Hearth and Home Technologies. Its significance is subject to the adequacy and representative character of the samples and to the comprehensiveness of the tests, examinations, or surveys made. The contents of this report cannot be copied or quoted, except in full, without specific, written authorization from Hearth and Home Technologies and OMNI-Test Laboratories, Inc. No use of the OMNI-Test Laboratories, Inc. name, logo, or registered mark (O-TL) is permitted, except as expressly authorized by OMNI-Test Laboratories, Inc. in writing.

-Document Edition Number (001) 02/07/2023 -

AUTHORIZED SIGNATORIES

This report has been reviewed and approved by the following authorized signatories:

Technician:

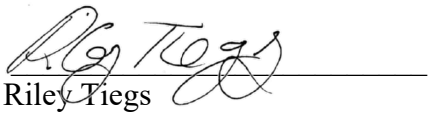

Riley Tiegs
OMNI-Test Laboratories, Inc.

Evaluator:

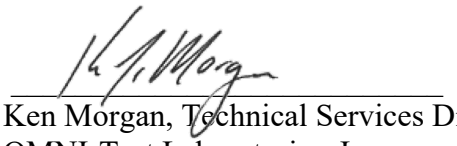

Ken Morgan, Technical Services Director
OMNI-Test Laboratories, Inc.

TABLE OF CONTENTS

PREFACE .....(3 pages)

1. SAMPLING PROCEDURES AND TEST RESULTS.....4
Introduction.....5
Individual Run Summaries 6

Summary Tables
Table 1 - Particulate Emissions Results.....7
Table 2 - Particulate Emissions Results (First Hour).....7
Table 3 – B415.1 Efficiency and CO Emissions 7
Table 4 - Test Facility Conditions 8
Table 5 - Fuel Measurements and Crib Descriptions - Pretest 8
Table 6 - Fuel Measurements and Crib Descriptions - Test 8
Table 7 - Dilution Tunnel Gas Measurements and Sampling Data 9
Table 8 – Average Temperature Data.....9
Table 9 - Pretest Configurations 9
Table 10 - Test Configurations 10

2. PHOTOGRAPHS/APPLIANCE DESCRIPTION/DRAWINGS.....11
Fuel Photographs 13
Appliance Description 15

3. TEST DATA BY RUN.....16
Conditioning Data.....18
Manufacturers Written Instructions.....36
Run 1.....41
Run 2.....61
Run 3.....84
Run 4.....104

4. QUALITY ASSURANCE/QUALITY CONTROL 123
Sample Analysis.....131
Calibrations – EPA Method 28R, ASTM E2515, ASTM E2780 142
Example Calculations 167

APPENDIX A – Labeling and Owner's Manual
APPENDIX B. – EPA Correspondence Chain
APPENDIX C. – Firebox Volume
APPENDIX D. – Revision History

Model: Intrepid FlexBurn 2115-CAT
Hearth and Home Technologies
352 Mountain House Road
Halifax, PA 17032

Section 1

Sampling Procedures and Test Results

INTRODUCTION

Hearth and Home Technologies retained *OMNI* to perform U.S. Environmental Protection Agency (EPA) certification testing on the Intrepid FlexBurn 2115-CAT cataltic wood stove. The Intrepid FlexBurn 2115-CAT wood stove is a radiant freestanding-type catalytic room heater. The firebox is constructed of cast iron. Usable firebox volume was measured to be 1.31 cubic feet and the stove is vented through a six-inch flue collar located at the rear of the stove top.

The testing was performed at OMNI-Test Laboratories located in Portland Oregon. The altitude of the laboratory is 30 feet above sea level. The unit was received in good condition and logged in on December 19, 2017, then assigned and labeled with *OMNI* ID #2264. *OMNI* representative Bruce Davis conducted the certification testing and completed all testing by January 16, 2018.

This report is organized in accordance with the EPA-recommended outline and is summarized in the Table of Contents immediately preceding this section. The results in this report are limited to the item submitted.

SAMPLING PROCEDURE

The Intrepid FlexBurn 2115-CAT catalytic wood stove was tested in accordance with the U.S. EPA 40 CFR Part 60, Subpart AAA – Standards of Performance for New Residential Wood Heaters using EPA Method 28R, ASTM E2515 and ASTM E2780. Particulate emissions were measured using sampling trains consisting of two filters (front and back).

The model Intrepid FlexBurn 2115-CAT was tested for thermal efficiency and carbon monoxide (CO) emissions in accordance with CSA B415.1-10.

SUMMARY OF RESULTS

The weighted average emissions of the four test runs included in the results indicate a particulate emission rate of 0.35 grams per hour. A total of five tests were conducted, one test was requested by the EPA to demonstrate the appliance would not achieve a category 3 burn rate. This test was investigative in nature and was not included in the test series data, see EPA correspondence in Appendix A. The Intrepid FlexBurn 2115-CAT results are within the emission limit of 2.0 g/hr. for affected facilities manufactured on or after May 15, 2020.

The proportionality results for all 5 test runs were acceptable. Quality check results for each test run are presented in Section 4 of this report.

Model: Intrepid FlexBurn 2115-CAT
Hearth and Home Technologies
352 Mountain House Road
Halifax, PA 17032

INDIVIDUAL RUN SUMMARIES – Certification Testing

Run 1 - Attempted category 2 burn rate at primary air control arm setting of 2.96" from the stove top right corner. Observed burn rate of 1.00 kg/hr. (category 2). No sampling anomalies occurred, so this test run is valid and appropriate for inclusion in the weighted average.

Run 2 - Attempted category 1 burn rate at primary air setting of full closed. Observed burn rate of 0.73 kg/hr. (category 1). No sampling anomalies occurred, so this test run is valid and appropriate for inclusion in the weighted average.

Run 3 - Attempted category 4 burn rate at primary air setting of fully open. Observed burn rate of 1.09 kg/hr. (category 2). Quality checks found probe weights exceeded allowable negative weights. ASTM 2515 allows a maximum negative weight of 5% of sample catch, with a sample catch of 1.3 mg. this gives an allowable negative weight of 0.065 mg. Allowable tare weight variation with the method is 0.2 mg., since the negative weight was within the allowable variation defined by the method it was deemed to be within specification. No additional sampling anomalies occurred, so this test run is valid and appropriate for inclusion in the weighted average.

Run 4 - Attempted category 4 burn rate at primary air setting of full open; Observed burn rate of 1.15 kg/hr. (category 2). Quality checks found probe weights exceeded allowable negative weights. ASTM 2515 allows a maximum negative weight of 5% of sample catch, with a sample catch of 1.3 mg. this gives an allowable negative weight of 0.065 mg. Allowable tare weight variation with the method is 0.2 mg., since the negative weight was within the allowable variation defined by the method it was deemed to be within specification. No additional sampling anomalies occurred, so this test run is valid and appropriate for inclusion in the weighted average.

Model: Intrepid FlexBurn 2115-CAT
Hearth and Home Technologies
352 Mountain House Road
Halifax, PA 17032

Table 1 – Particulate Emissions

Run	Burn Rate (kg/hr dry)	ASTM E2515 Emissions (g/hr) Corrected[1]	ASTM E2515 Emissions (g/hr) Uncorrected[2]
1	1.00	0.51	0.67
2	0.73	0.20	0.21
3	1.09	0.31	0.37
4	1.15	0.37	0.47
Weighted particulate emission average of 4 test runs: 0.35 grams per hour.			

[1]Corrected refers to gravimetric analysis that takes negative filter weights as a negative value in cases where filter residue was transferred to (stuck to) O-ring gaskets to account for the mass transfer.

[2]Uncorrected refers to gravimetric analysis where negative filter weights are taken as zero, thus reporting a higher value by overreporting of transferred filter material. The uncorrected values were added to this report in response to a request by the US EPA.

Table 2 – Particulate Emissions (First Hour)

Run	ASTM E2515 Emissions – First Hour (g/hr) Corrected[1]	ASTM E2515 Emissions – First Hour (g/hr) Uncorrected[2]
1	0.46	0.46
2	0.47	0.47
3	0.84	0.84
4	0.19	0.19

[1]Corrected refers to gravimetric analysis that takes negative filter weights as a negative value in cases where filter residue was transferred to (stuck to) O-ring gaskets to account for the mass transfer.

[2]Uncorrected refers to gravimetric analysis where negative filter weights are taken as zero, thus reporting a higher value by overreporting of transferred filter material. The uncorrected values were added to this report in response to a request by the US EPA.

Table 3 – B415.1 Efficiency and CO Emissions

Run	Heat Output (BTU/hr)	HHV Efficiency (%)	LHV Efficiency (%)	CO Emissions (g/MJ Output)	CO Emissions (g/kg Dry Fuel)	CO Emissions (g/min)	CO Emissions (g/hour)
1	14,544	78.4	84.7	1.95	30.36	0.50	29.97
2	10,665	78.4	84.7	2.50	38.79	0.47	28.08
3	15,235	75.0	81.0	4.11	61.03	1.10	65.99
4	15,906	74.9	80.9	4.35	64.45	1.21	72.88
Weighted average HHV efficiency of 4 test runs: 76.7%. Average CO Emissions: 0.82g/min, 49.23g/hour.							

Table 4 – Test Facility Conditions

Run	Room Temperature (°F)		Barometric Pressure (Hg)		Air Velocity (ft/min)	
	Before	After	Before	After	Before	After
1	72	73	30.19	30.14	<50	<50
2	72	70	30.10	30.08	<50	<50
3	73	69	30.12	30.11	<50	<50
4	68	71	29.89	29.78	<50	<50

Table 5 – Fuel Measurement and Crib Description Summary – PRETEST

Run	Pretest Fuel Weight (Starting weight in lbs)	Pretest Moisture (Dry basis - %)	Coal Bed Weight (lbs)
1	9.9	21.7	2.0
2	10.0	22.63	2.0
3	10.0	20.83	2.0
4	10.0	21.64	2.1

Table 6 – Fuel Measurement and Crib Description Summary – TEST

Run	Test Fuel Wet Basis (lbs)	Firebox Volume (ft^3)	Fuel Loading Density Wet Basis (lbs/ft^3)	Test Fuel Dry Basis (lbs)	Piece Length (in)	2x4s Used	4x4s Used
1	8.5	1.31	6.49	7.2	13.5	5	0
2	8.5	1.31	6.49	7.1	13.5	5	0
3	8.5	1.31	6.49	7.1	13.5	5	0
4	8.7	1.31	6.64	7.3	13.5	5	0

Table 7 – Dilution Tunnel Gas Measurements and Sampling Data Summary

Run	Length of Test (min)	Average Dilution Tunnel Gas Measurements		
		Velocity (ft/sec)	Flow Rate (dscf/min)	Temperature (°F)
1	195	13.15	146.4	92
2	266	13.21	148.4	85
3	177	13.23	146.7	93
4	173	14.04	154.1	93

Table 8 - Average Temperature Data

Run	Beginning Surface Temperature Average[a]	Ending Surface Temperature Average[a]	Surface Delta T[b]
1	428	375	53
2	421	314	107
3	463	373	90
4	458	385	73
a. All temperatures are in degrees F.			
b. Represents the difference between beginning and ending average surface temperatures.			

Table 9 – Pretest Configuration

Run	Combustion Air	Fuel Added	Fuel Removed	Time (min)
1	2.96" from corner of stove top.	13.7	0	97
2	Fully closed	13.4	0	123
3	Fully open	13.5	0	90
4	Fully open	13.8	0	91

Table 10 – Test Configurations

Run	Five-Minute Startup Procedures	Combustion Air
1	Fuel Loading: Fuel loaded by 55 seconds Door: Closed by 60 seconds Bypass: Closed by 1 minute Primary Air: At test setting entire test Secondary: No user adjustment Fan: N/A	Control arm 2.96" from corner of stove top.
2	Fuel Loading: Fuel loaded by 53 seconds Door: Closed by 57 seconds Bypass: Closed by 60 seconds Primary Air: At test setting entire test Secondary: No user adjustment Fan: N/A	Fully closed
3	Fuel Loading: Fuel loaded by 49 seconds Door: Closed by 55 seconds Bypass: Closed by 55 seconds Primary Air: At test setting entire test Secondary: No user adjustment Fan: N/A	Fully open
4	Fuel Loading: Fuel loaded by 50 seconds Door: Closed by 55 seconds Bypass: Closed by 55 seconds Primary Air: At test setting entire test Secondary: No user adjustment Fan: N/A	Fully open

Section 2

Photographs/Appliance Description/Drawings

Model: Intrepid FlexBurn 2115-CAT
Hearth and Home Technologies
352 Mountain House Road
Halifax, PA 17032

Hearth and Home Technologies

Intrepid FlexBurn 2115-CAT

Test Dates: January 3, 2018 – January 16, 2018









Model: Intrepid FlexBurn 2115-CAT
Hearth and Home Technologies
352 Mountain House Road
Halifax, PA 17032

Hearth and Home Technologies
Intrepid FlexBurn 2115-CAT

Run 1 – Fuel



Run 1 – Newly Loaded Stove



Run 2 – Fuel



Run 2 – Newly Loaded Stove



Hearth and Home Technologies
Intrepid FlexBurn 2115-CAT

Run 3 – Fuel



Run 3 – Newly Loaded Stove



Run 4 – Fuel



Run 4 – Newly Loaded Stove



WOOD HEATER DESCRIPTION

Appliance Manufacturer: Hearth and Home Technologies

Wood Stove Model: Intrepid FlexBurn 2115-CAT

Type: Catalytic **r**adiant freestanding

WOOD HEATER INFORMATION

Materials of Construction: The unit is constructed primarily of cast iron. The firebox is lined with refractory brick that measures 12" x 6" x 1.25". The feed door has a 9.4" x 5.88" glass panel and 5/16" gasket.

Air Introduction System: Primary air is controlled by a Bi-metallic spring thermostat located at the right rear of the stove top. Moving the control arm fully to the left opens the air control, fully to the right closes the air. As the spring heats up, it tightens causing the controlling damper to close. Secondary air is un-controlled, it enters the appliance through an opening located at the rear of the stove on the bottom side. Air travels into the refractory secondary combustion system and enters the flame path through orifices in the refractory walls.

Combustion Control Mechanisms: Primary air is controlled by a Bi-metallic spring thermostat located at the right rear of the stove top. Moving the control arm fully to the left opens the air control, fully to the right closes the air. As the coil spring heats up, it tightens causing the controlling damper to close, cooling of the spring loosens the coil and allows the controlling damper to open. Position of the control arm sets the tension of the coil that determines how much heat is needed to cause the control damper to close.

Combustor: Combustor is an Applied Ceramics part number WF-4150001163 metal type with 25 cells per square inch. Outside dimensions of the face are 6.41" x 2.49"; a 430 stainless Steel, 16-gauge can is used to wrap the four outer sides. The combustor is an option to the stove model which is certified as a non-cat to 2020 requirements.

Internal Baffles: An internal baffle is not used; flame path is either directed through a bypass opening or through the refractory combustion chamber.

Other Features: A catalyst bypass is operated by a handle located on the right side of the firebox. The ash pan is accessed through a door located under the front fuel loading door, a top fuel loading door is in the stove top.

Flue Outlet: The 6" diameter flue outlet is located in the top rear of the unit.

WOOD HEATER OPERATING INSTRUCTIONS

Specific Written Instructions: See Section 5 of this report. All markings and instruction materials were reviewed for content prior to printing.

Section 3

Test Data by Run

EPA Weighted Average Emissions
EPA Method 28

Client:	Hearth & Home	Status:	Final
Stove Model:	Intrepid FlexBurn 211	Stove Type:	Catalytic Stove
Test Dates:	1/3/18 - 1/8/18		
Project Number:	0135WS038E		
Tracking Number:	2264		

Weighted Averages	**Emissions (g/hr):**	**0.3**
	HHV Efficeincy (%):	**76.7**
	LHV Efficeincy (%):	**82.8**

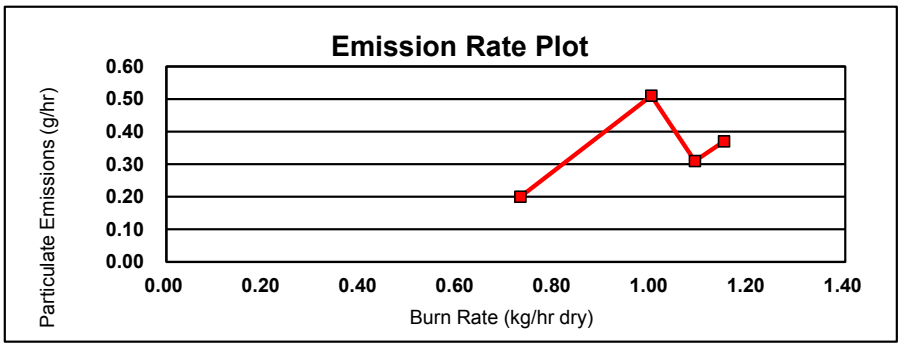

Run #	2	
Burn Rate (dry kg/hr)	0.73	
Category	1	
LHV Efficiency (%)	84.7	
HHV Efficiency (%)	78.4	
Emissions (g/hr)	0.2	
Weighting Factor	0.380	28.81%

Run #	1	
Burn Rate (dry kg/hr)	1.00	
Category	2	
LHV Efficiency (%)	84.7	
HHV Efficiency (%)	78.4	
Emissions (g/hr)	0.51	
Weighting Factor	0.278	21.11%

Run #	3	
Burn Rate (dry kg/hr)	1.09	
Category	2	
LHV Efficiency (%)	81	
HHV Efficiency (%)	75	
Emissions (g/hr)	0.31	
Weighting Factor	0.110	8.34%

Run #	4	
Burn Rate (dry kg/hr)	1.15	
Category	2	
LHV Efficiency (%)	80.9	
HHV Efficiency (%)	74.9	
Emissions (g/hr)	0.37	
Weighting Factor	0.551	41.74%

Catalyst Aging Record

Conducted by Hearth and Home, Bethel Vermont at a Medium Burn Rate

April 2017 - November 2017

Time	Scale Weight	Fuel Added	Moisture Content	Flue Gas	Catalytic Combustor Temp
(min)	(kg)	(kg)	%	Deg F	Deg F
0	0	0		0	0
5	5.24	5.24	21.04	229	615
10	4.99	0		217	626
15	4.72	0		220	723
20	4.44	0		219	622
25	4.1	0		242	948
30	3.83	0		235	811
35	3.61	0		233	771
40	3.4	0		233	832
45	3.17	0		234	946
50	2.86	0		270	1086
55	2.56	0		270	1158
60	2.29	0		283	1256
65	2.02	0		288	1263
70	1.81	0		284	1217
75	1.66	0		275	1082
80	1.47	0		266	1179
85	1.36	0		261	1081
90	1.25	0		257	1016
95	1.2	0		251	905
100	0.98	0		242	930
105	4.78	3.8	21.4	234	1111
110	4.6	0		236	1144
115	4.4	0		243	1176
120	4.2	0		249	1250
125	3.95	0		255	130
130	3.72	0		263	1404
135	3.45	0		272	1423
140	3.2	0		278	1437
145	2.97	0		276	1402
150	2.77	0		274	1356
155	2.56	0		281	1413
160	2.29	0		286	1484
165	2.06	0		287	1513
170	1.88	0		289	1440
175	1.72	0		281	1192
180	1.63	0		273	1003
185	1.56	0		262	922
190	1.52	0		256	864
195	1.47	0		249	819
200	1.43	0		238	789
205	1.38	0		235	784

210	1.34	0		232	760
215	1.29	0		228	738
220	1.25	0		224	734
225	1.22	0		224	721
230	1.18	0		222	704
235	1.13	0		220	694
240	1.11	0		216	683
245	1.07	0		216	669
250	1.04	0		212	656
255	1	0		210	654
260	0.98	0		214	645
265	4.33	3.35	21.42	363	1014
270	4.17	0		294	1160
275	3.92	0		263	886
280	3.74	0		251	891
285	3.56	0		242	878
290	3.4	0		237	867
295	3.24	0		233	886
300	3.02	0		237	1220
305	2.83	0		240	1284
310	2.63	0		243	1390
315	2.31	0		261	1494
320	2.15	0		250	1331
325	1.97	0		244	1295
330	1.86	0		240	1241
335	1.61	0		256	1518
340	1.45	0		247	1267
345	1.38	0		236	1115
350	1.32	0		230	1015
355	1.22	0		229	1070
360	1.18	0		217	1048
365	1.07	0		217	968
370	0.91	0		211	982
375	4.58	3.67	21.42	204	962
380	4.44	0		209	1120
385	4.31	0		217	1147
390	4.13	0		226	1229
395	3.92	0		235	1307
400	3.7	0		245	1434
405	3.45	0		256	1555
410	3.22	0		261	1680
415	2.97	0		265	1610
420	2.74	0		273	1636
425	2.52	0		276	1646
430	2.29	0		281	1669
435	2.06	0		284	1678
440	1.86	0		281	1675

445	1.72	0		274	1500
450	1.61	0		268	1293
455	1.54	0		262	1146
460	1.5	0		250	998
465	1.45	0		24	929
470	1.43	0		234	880
475	1.38	0		224	854
480	1.34	0		221	828
485	1.32	0		217	814
490	1.27	0		212	778
495	1.25	0		203	770
500	1.22	0		201	761
505	1.18	0		197	754
510	1.16	0		193	744
515	1.13	0		191	727
520	1.11	0		186	701
525	1.07	0		184	684
530	1.04	0		184	676
535	1.04	0		179	666
540	1	0		177	650
545	1	0		176	627
550	0.98	0		172	604
555	0.95	0		171	623
560	0.91	0		167	604
565	4.29	3.38	20.86	305	1071
570	4.06	0		278	1079
575	3.74	0		274	1278
580	3.47	0		273	1248
585	3.2	0		278	1425
590	2.9	0		284	1337
595	2.9	0		305	1366
600	2.29	0		299	1544
605	2	0		308	1455
610	1.75	0		299	1403
615	1.47	0		301	1390
620	1.32	0		291	1229
625	0.91	0		284	998
630	0.82	0		258	1073
635	4.31	3.49	20.86	244	1259
640	4.13	0		242	1360
740	1.02	0		233	822
745	0.98	0		231	814
750	0.95	0		227	804
755	0.91	0		225	779
760	0.88	0		218	780
765	0.84	0		218	770
770	0.82	0		217	770

775	4.81	3.99	22	304	1085
780	4.56	0		271	1170
785	4.22	0		280	1489
790	3.9	0		289	1491
795	3.61	0		293	1387
800	3.33	0		316	1327
805	3.02	0		301	1454
810	2.74	0		301	1427
815	2.45	0		307	1535
820	1.81	0		342	1460
825	1.79	0		314	1553
830	1.56	0		309	1567
835	1.36	0		304	1495
840	1.22	0		297	1352
845	1.16	0		278	1280
850	1.09	0		272	1189
855	1.06	0		268	1123
860	1.02	0		268	1125
865	5.28	4.26	22	248	1372
870	5.1	0		250	1438
875	4.88	0		259	1524
880	4.63	0		270	1591
885	4.35	0		279	1600
890	4.01	0		294	1621
895	3.7	0		306	1600
900	3.33	0		310	1587
905	3.02	0		314	1585
910	2.68	0		312	1561
915	2.36	0		312	1555
920	2.09	0		311	1586
925	1.93	0		307	1379
930	1.86	0		293	1226
935	1.77	0		284	1159
940	1.72	0		278	1104
945	1.68	0		272	1069
950	1.61	0		265	1036
955	1.56	0		262	1029
960	1.52	0		255	1008
965	1.45	0		252	999
970	1.41	0		250	981
975	1.36	0		246	969
980	1.32	0		246	950
985	1.27	0		242	930
990	1.25	0		240	914
995	1.2	0		236	907
1000	1.16	0		236	895
1005	1.13	0		233	864

1010	1.09	0		229	883
1015	1.04	0		227	872
1020	1.02	0		227	866
1025	3.08	2.06	20.36	348	1080
1030	2.9	0		322	1053
1035	2.77	0		316	1051
1040	2.63	0		306	938
1045	2.4	0		331	1360
1050	2.2	0		342	1433
1055	2.02	0		362	1413
1060	1.86	0		368	1396
1065	1.61	0		381	1552
1070	1.41	0		374	1506
1075	1.27	0		368	1460
1080	1.13	0		360	1393
1085	1	0		362	1294
1090	0.91	0		340	1265
1095	5.58	4.67	20.36	319	1469
1100	5.44	0		332	1414
1105	5.26	0		355	1437
1110	5.06	0		356	1376
1115	4.85	0		372	1377
1120	4.63	0		371	1450
1125	4.38	0		382	1427
1130	4.17	0		389	1586
1135	3.92	0		394	1530
1140	3.7	0		398	1504
1145	3.51	0		388	1478
1150	3.29	0		396	1552
1155	3.06	0		404	1644
1160	2.81	0		425	1688
1165	2.54	0		436	1706
1170	2.31	0		430	1668
1175	2.13	0		407	1466
1180	2.02	0		390	1342
1185	1.9	0		377	1202
1190	1.81	0		362	1028
1195	1.75	0		343	958
1200	1.7	0		330	933
1205	1.68	0		323	916
1210	1.66	0		316	893
1215	1.59	0		309	870
1220	1.56	0		302	844
1225	1.52	0		293	840
1230	1.47	0		287	822
1235	1.45	0		286	835
1240	1.41	0		281	843

1245	1.38	0		283	830
1250	1.34	0		278	817
1255	1.29	0		279	812
1260	1.27	0		274	793
1265	1.22	0		269	790
1270	1.2	0		265	784
1275	1.18	0		274	786
1280	1.13	0		265	775
1285	1.09	0		270	787
1290	1.07	0		266	781
1295	1.02	0		266	772
1300	0.98	0		260	766
1305	0.95	0		264	777
1310	0.93	0		266	779
1315	3.51	2.58	21.4	305	990
1320	3.36	0		307	1006
1325	3.22	0		296	876
1330	3.08	0		287	797
1335	2.95	0		291	1089
1340	2.79	0		288	932
1345	2.65	0		286	906
1350	2.49	0		285	640
1355	2.29	0		321	1013
1360	2.13	0		307	983
1365	1.95	0		299	990
1370	1.79	0		308	1026
1375	1.56	0		346	1396
1380	1.41	0		340	1342
1385	1.27	0		337	1215
1390	1.18	0		337	1148
1395	1.09	0		327	1074
1400	1	0		327	1009
1405	0.98	0		298	1067
1410	5.22	4.24		277	1220
1415	5.08	0	21.4	315	1356
1420	4.92	0		330	1334
1425	4.74	0		347	1348
1430	4.54	0		365	1362
1435	4.33	0		266	1329
1440	4.13	0		375	1542
1445	3.85	0		399	1559
1450	3.65	0		389	1423
1455	3.47	0		390	1448
1460	3.24	0		397	1486
1465	3.04	0		407	1573
1470	2.81	0		408	1572
1475	2.59	0		420	1628

1480	2.36	0		422	1636
1485	2.15	0		422	1619
1490	1.97	0		403	1484
1495	1.84	0		392	1306
1500	1.77	0		376	1170
1505	1.7	0		361	1082
1510	1.66	0		347	1019
1515	1.61	0		343	983
1520	1.59	0		332	947
1525	1.52	0		326	919
1530	1.5	0		317	890
1535	1.45	0		312	871
1540	1.43	0		309	857
1545	1.41	0		305	839
1550	1.36	0		292	814
1555	1.34	0		294	805
1560	1.32	0		285	781
1565	1.27	0		280	762
1570	1.27	0		285	749
1575	1.22	0		274	724
1580	1.18	0		268	719
1585	1.18	0		273	737
1590	1.16	0		264	699
1595	1.16	0		258	676
1600	1.13	0		248	652
1605	1.11	0		244	664
1610	1.07	0		251	640
1615	1.04	0		249	646
1620	1	0		246	677
1625	0.95	0		246	695
1630	3.4	2.45	20.38	469	1271
1635	3.17	0		487	1379
1640	2.93	0		516	1504
1645	2.7	0		493	1353
1650	2.45	0		528	1628
1655	2.22	0		506	1442
1660	2.04	0		498	1375
1665	1.88	0		497	1372
1670	1.63	0		515	1488
1675	1.47	0		499	1376
1680	1.32	0		499	1343
1685	1.16	0		485	1187
1690	1.04	0		453	1225
1695	0.98	0		436	1128
1700	0.91	0		402	1159
1705	4.88	3.97	20.38	414	1269
1710	4.74	0		429	1263

1715	4.58	0		443	1284
1720	4.38	0		458	1334
1725	4.2	0		471	1362
1730	3.97	0		477	1369
1735	3.76	0		485	1379
1740	3.56	0		487	1390
1745	3.36	0		496	1454
1750	3.15	0		505	1481
1755	2.97	0		505	1494
1760	2.77	0		525	1622
1765	2.49	0		561	1706
1770	2.24	0		572	1712
1775	2.02	0		562	1682
1780	1.86	0		523	1418
1785	1.77	0		496	1279
1790	1.68	0		475	1134
1795	1.63	0		451	1036
1800	1.59	0		435	977
1805	1.54	0		421	937
1810	1.52	0		409	921
1815	1.5	0		400	922
1820	1.45	0		394	899
1825	1.41	0		390	902
1830	1.36	0		382	871
1835	1.36	0		377	863
1840	1.29	0		369	863
1845	1.27	0		365	853
1850	1.25	0		361	843
1855	1.18	0		356	836
1860	1.16	0		352	831
1865	1.13	0		348	820
1870	1.11	0		349	810
1875	1.07	0		347	804
1880	1.04	0		342	804
1885	1.02	0		341	796
1890	1.02	0		341	792
1895	0.95	0		337	788
1900	0.95	0		332	789
1905	0.93	0		330	782
1910	0.91	0		330	780
1915	2.7	1.79	19.5	347	1104
1920	2.52	0		311	1238
1925	2.36	0		307	1464
1930	2.18	0		302	1383
1935	2	0		298	1333
1940	1.75	0		333	1479
1945	1.52	0		297	1459

1950	1.36	0		290	1308
1955	1.16	0		286	1221
1960	1.11	0		280	1168
1965	1.04	0		275	1010
1970	1	0		261	945
1975	0.93	0		250	943
1980	0.91	0		242	974
1985	4.31	3.4	19.5	234	1019
1990	4.2	0		242	1082
1995	4.04	0		251	1124
2000	3.88	0		265	1168
2005	3.7	0		260	1196
2010	3.49	0		276	1253
2015	3.24	0		293	1355
2020	2.99	0		296	1428
2025	2.74	0		301	1451
2030	2.47	0		309	1472
2035	2.22	0		308	1505
2040	1.97	0		312	1544
2045	1.75	0		310	1521
2050	1.59	0		304	1319
2055	1.5	0		292	1146
2060	1.43	0		283	1063
2065	1.36	0		278	1005
2070	1.32	0		269	962
2075	1.27	0		263	940
2080	1.22	0		257	909
2085	1.18	0		258	881
2090	1.13	0		250	859
2095	1.09	0		247	837
2100	1.04	0		245	823
2105	1	0		242	798
2110	0.98	0		239	792
2115	0.93	0		235	776
2120	0.91	0		233	768
2125	3.38	2.47	19.5	399	1085
2130	3.22	0		356	1079
2135	3.06	0		337	1092
2140	2.93	0		328	1106
2145	2.65	0		363	1440
2150	2.47	0		360	1321
2155	2.27	0		357	1328
2160	2.11	0		358	1296
2165	1.93	0		368	1333
2170	1.75	0		357	1373
2175	1.61	0		351	1344
2180	1.45	0		349	1334

2185	1.27	0		3622	1460
2190	1.13	0		343	1309
2195	1.09	0		338	1265
2200	1.04	0		328	1203
2205	0.98	0		322	1107
2210	0.93	0		326	1154
2215	4.78	3.85	21.2	298	1297
2220	4.65	0		324	1464
2225	4.49	0		341	1360
2230	4.35	0		344	1342
2235	4.15	0		355	1403
2240	3.97	0		360	1442
2245	3.79	0		358	1359
2250	3.61	0		362	1412
2255	3.42	0		366	1427
2260	3.24	0		366	1428
2265	3.06	0		370	1434
2270	2.88	0		370	1496
2275	2.7	0		368	1501
2280	2.52	0		366	1509
2285	2.36	0		359	1449
2290	2.22	0		356	1413
2295	2.13	0		346	1321
2300	2.04	0		333	1267
2305	2	0		325	1182
2310	1.95	0		314	1087
2315	1.9	0		302	1028
2320	1.88	0		293	989
2325	1.86	0		286	960
2330	1.84	0		283	944
2335	1.81	0		282	932
2340	1.79	0		285	949
2345	1.77	0		281	922
2350	1.75	0		275	906
2355	1.72	0		275	900
2360	1.7	0		273	881
2365	1.68	0		271	853
2370	1.63	0		271	842
2375	1.63	0		267	836
2380	1.59	0		267	828
2385	1.59	0		263	818
2390	1.56	0		261	814
2395	1.54	0		257	806
2400	1.5	0		255	791
2405	1.5	0		253	781
2410	1.45	0		251	771
2415	1.43	0		253	769

2420	1.41	0		251	769
2425	1.38	0		251	767
2430	1.36	0		252	778
2435	1.32	0		252	771
2440	1.29	0		245	801
2445	1.27	0		250	803
2450	1.25	0		252	812
2455	1.2	0		252	808
2460	1.18	0		25	810
2465	1.16	0		248	812
2470	1.16	0		252	802
2475	1.09	0		250	774
2480	1.07	0		246	731
2485	1.07	0		240	688
2490	1.07	0		238	648
2495	1.04	0		231	601
2500	1.02	0		225	580
2505	3.63	2.61	21.2	334	932
2510	3.49	0		299	951
2515	3.36	0		289	988
2520	3.17	0		337	1317
2525	2.99	0		298	1075
2530	2.83	0		296	1207
2535	2.68	0		302	1115
2540	2.56	0		292	1006
2545	2.43	0		322	1119
2550	2.29	0		296	1076
2555	2.15	0		286	1002
2560	2.04	0		288	1482
2565	1.84	0		314	1458
2570	1.68	0		314	1437
2575	1.56	0		315	1290
2580	1.47	0		306	1205
2585	1.36	0		319	1339
2590	1.29	0		304	1152
2595	1.25	0		294	1053
2600	0.95	0		298	1061
2605	4.6	3.65	20.22	272	1167
2610	4.49	0		279	1218
2615	4.35	0		290	1223
2620	4.24	0		297	1219
2625	4.08	0		303	1267
2630	3.9	0		312	1286
2635	3.74	0		312	1288
2640	3.56	0		319	1355
2645	3.38	0		324	1429
2650	3.24	0		324	1328

2655	3.11	0		320	1303
2660	2.95	0		324	1320
2665	2.81	0		331	1364
2670	2.68	0		329	1323
2675	2.54	0		329	1321
2680	2.38	0		327	1317
2685	2.27	0		325	1306
2690	2.15	0		327	1285
2695	2.04	0		323	1233
2700	2	0		316	1180
2705	1.93	0		308	1081
2710	1.9	0		299	1009
2715	1.86	0		288	974
2720	1.84	0		284	931
2725	1.81	0		276	906
2730	1.79	0		271	882
2735	1.77	0		267	863
2740	1.75	0		263	853
2745	1.72	0		259	842
2750	1.72	0		254	836
2755	1.7	0		252	830
2760	1.68	0		250	816
2765	1.66	0		248	803
2770	1.63	0		244	801
2775	1.61	0		244	789
2780	1.59	0		242	824
2785	1.54	0		240	797
2790	1.52	0		235	785
2795	1.47	0		233	783
2800	1.45	0		233	772
2805	1.43	0		231	762
2810	1.38	0		229	752
2815	1.36	0		227	752
2820	1.36	0		228	748
2825	1.32	0		226	750
2830	11.29	9.97	20.22	223	740
2835	11.27	0		226	738
2840	11.25	0		224	734
2845	11.25	0		222	729
2850	11.2	0		219	734
2855	3.47	0		358	950
2860	3.33	0		348	905
2865	3.22	0		337	845
2870	3.11	0		337	894
2875	2.88	0		402	1413
2880	2.68	0		411	1327
2885	2.47	0		385	1206

2890	2.34	0		407	1247
2895	2.09	0		438	1239
2900	1.9	0		438	1184
2905	1.72	0		436	1317
2910	1.52	0		445	1225
2915	1.36	0		449	1219
2920	1.22	0		395	993
2925	1.13	0		386	1092
2930	1.04	0		376	1090
2935	1.03	0		374	1034
2940	0.98	0		345	1125
2945	4.24	3.26	19.7	341	1233
2950	4.15	0		368	1287
2955	3.97	0		398	1335
2960	3.74	0		418	1358
2965	3.51	0		431	1430
2970	3.24	0		451	1541
2975	3.04	0		457	1482
2980	2.79	0		462	1514
2985	2.54	0		468	1576
2990	2.31	0		477	1618
2995	2.06	0		510	1648
3000	1.9	0		466	1503
3005	1.79	0		432	1271
3010	1.75	0		404	1104
3015	1.7	0		384	1040
3020	1.66	0		371	973
3025	1.63	0		360	942
3030	1.61	0		350	929
3035	1.56	0		345	936
3040	1.5	0		339	929
3045	1.45	0		332	917
3050	1.36	0		330	906
3055	1.29	0		328	890
3060	1.22	0		321	881
3065	1.18	0		323	875
3070	1.13	0		320	862
3075	1.09	0		316	856
3080	1.02	0		314	841
3085	0.98	0		311	833
3090	3.33	2.35	19.7	342	818
3095	3.15	0		329	812
3100	2.97	0		314	705
3105	2.81	0		323	817
3110	2.63	0		314	813
3115	2.47	0		323	852
3120	2.29	0		325	850

3125	2.11	0		334	921
3130	1.86	0		415	1370
3135	1.68	0		410	1116
3140	1.5	0		374	1013
3145	1.38	0		356	956
3150	1.25	0		382	1212
3155	1.13	0		350	997
3160	1.07	0		350	997
3165	1	0		302	1035
3170	4.26	3.26	20.48	309	1127
3175	4.13	0		346	1193
3180	3.99	0		361	1189
3185	3.79	0		387	1329
3190	3.58	0		396	1264
3195	3.38	0		420	1383
3200	3.13	0		435	1308
3205	2.9	0		427	1289
3210	2.68	0		407	1212
3215	2.45	0		424	1302
3220	2.24	0		414	1217
3225	2.06	0		423	1300
3230	1.9	0		414	1219
3235	1.81	0		384	1029
3240	1.75	0		364	980
3245	1.72	0		353	947
3250	1.7	0		342	904
3255	1.66	0		336	877
3260	1.63	0		332	858
3265	1.61	0		327	850
3270	1.56	0		323	846
3275	1.54	0		319	833
3280	1.5	0		318	852
3285	1.45	0		316	837
3290	1.43	0		319	848
3295	1.38	0		316	844
3300	1.32	0		312	831
3305	1.29	0		312	819
3310	1.25	0		310	810
3315	1.2	0		307	804
3320	1.16	0		305	810
3325	1.11	0		305	812
3330	1.09	0		303	789
3335	1.04	0		299	785
3340	1.02	0		299	783
3345	3.61	2.59	20.48	345	827
3350	3.42	0		347	921
3355	3.22	0		350	939

3360	3.04	0		417	878
3365	2.79	0		400	1104
3370	2.61	0		374	1016
3375	2.43	0		368	1035
3380	2.22	0		372	1072
3385	1.95	0		465	1432
3390	1.75	0		429	1312
3395	1.59	0		405	1145
3400	1.45	0		371	978
3405	1.32	0		388	1048
3410	1.2	0		371	1001
3415	1.11	0		365	995
3420	1.07	0		358	933
3425	0.98	0		317	1016
3430	5.12	4.14	19.24	341	1135
3435	5.01	0		365	1171
3440	4.88	0		385	1191
3445	4.74	0		396	1214
3450	4.54	0		409	1258
3455	4.26	0		438	1323
3460	3.95	0		453	1382
3465	3.63	0		474	1466
3470	3.29	0		482	1487
3475	2.97	0		490	1550
3480	2.65	0		517	1628
3485	2.31	0		569	1678
3490	2.04	0		566	1638
3495	1.84	0		498	1377
3500	1.7	0		452	1183
3505	1.66	0		414	1035
3510	1.61	0		386	968
3515	1.56	0		373	935
3520	1.52	0		362	912
3525	1.5	0		354	890
3530	1.43	0		347	917
3535	1.38	0		343	886
3540	1.34	0		341	876
3545	1.32	0		335	859
3550	1.27	0		330	853
3555	1.25	0		328	843
3560	1.18	0		322	830
3565	1.16	0		322	826
3570	1.11	0		320	818
3575	1.09	0		318	812
3580	1.04	0		316	801
3585	1.02	0		311	791
3590	1	0		311	789

3595	3.61	2.61	19.24	361	907
3600	3.45	0		342	888
3605	3.31	0		337	880
3610	3.08	0		416	1342
3615	2.86	0		436	1235
3620	2.65	0		405	1093
3625	2.43	0		395	1093
3630	2.24	0		386	1100
3635	2.06	0		380	1026
3640	1.84	0		415	1213
3645	1.68	0		397	1152
3650	1.56	0		393	1146
3655	1.43	0		435	1324
3660	1.29	0		402	1196
3665	1.2	0		394	1142
3670	1.1	0		385	1103
3675	1.07	0		374	1037
3680	1.04	0		331	961
3685	0.98	0		329	986
3690	4.33	3.35	19.14	340	1126
3695	4.22	0		362	1149
3700	4.06	0		371	1182
3705	3.92	0		388	1196
3710	3.74	0		390	1178
3715	3.58	0		401	1217
3720	3.38	0		412	1292
3725	3.2	0		427	1298
3730	2.99	0		425	1234
3735	2.83	0		423	1232
3740	2.65	0		430	1278
3745	2.47	0		427	1236
3750	2.29	0		419	1209
3755	2.15	0		400	1168
3760	2.02	0		400	1147
3765	1.9	0		280	1065
3770	1.84	0		356	963
3775	1.79	0		350	919
3780	1.77	0		341	905
3785	1.72	0		335	893
3790	1.68	0		333	870
3795	1.66	0		326	855
3800	1.61	0		322	833
3805	1.56	0		320	824
3810	1.52	0		320	816
3815	1.5	0		316	808
3820	1.47	0		314	802
3825	1.43	0		309	791

3830	1.41	0		309	797
3835	1.34	0		311	825
3840	1.29	0		314	833
3845	1.27	0		314	827
3850	1.22	0		311	818
3855	1.2	0		307	800
3860	1.16	0		305	785
3865	1.13	0		303	777
3870	1.09	0		298	762
3875	1.07	0		294	735
3880	1.07	0		290	712
3885	1.04	0		283	701
3890	1	0		283	695
3895	0.98	0		279	678
3900	0.95	0		271	640

Total Conditioning	65 hrs

12/11/2017

Omni Test Laboratory
13327 NE Airport Way
Portland, OR 97230 USA
503.643.3788

Dear Sebastian Button

Please see the attached procedures we use for our testing preburn.

Sincerely,

Peter Macleay
R&D Design Manager, VCG

DAN Whitcomb
11/30/17 R+D

Stove Intrepid IV

Vol= 1.30 cu. ft.
Load Weight 4.13 kg
Wood Length 13 in

	Low	Med. Low	Med. High	High
Control Setting	Closed	yellow MARK	Wide Open	Wide open
Kindling	4-4.5 (lb) kg	" (lb) kg	" (lb) kg	" (lb) kg
Pre-burn Load Size 6 in (2x4) (For all CAT Burns 14.1lbs)	NON-CAT (lb) kg 15.5	(lb) kg 15.5	(lb) kg 15.5	(lb) kg 15.5
Pre-Shutdown instructions	Leave doors cracked and damp open to burn pre-burn down to 10 lbs. Then close doors and damper and set Air For 1 hr + Pre-burn.			
Shutdown Weight	10, (lb) kg	10 (lb) kg	10 (lb) kg	10 (lb) kg
Post-Shutdown Instructions	Stir after the First 10 min's, then every 20 min's Intill Loading time.			
Loading Temp deg F	450° or less		500° or Less	
Results (NON-CAT)	Br-.91 EPA-.05 DT-103°	Br-1.06 EPA-.21 DT-103°	Br-1.39 EPA-.09 DT-124°	Br-1.46 EPA-.08 DT-83°
(CAT STEEL #3)	Br-.98 EPA-.12 DT-89°	Br-1.24 EPA-.17 DT-58°	Br-1.31 EPA-.35 DT-76°	Br-1.38 EPA-.36 DT-83°

" Before any leveling & Packing of coal load, I push some coals into space under back Refractory cover, then level and Pack. " (For all Burns)

NON-CAT (On Low burns, before loading, make sure there is not any unburnt fuel in fire-box)

Cat 1 (Closed) 15.5 lbs Pre-burn
Burn down to 10 lbs with damper open, doors cracked
Then close and set for 1 hr pre-burn
LOAD - Temp = 450° or less.
STir - 10 mins, 30 mins, 50, 70, 90, 115 Level & Pack coal bed. (It takes along time for temps to drop.)

CAT 2 (Mark on stove / Air box.) 15.5 lbs Pre-burn.
Burn down to 10 lbs with damper open, doors cracked,
Then close and set for 1 hr pre-burn.
STir - 10 mins, 30 mins 50 mins. 75 Level and pack coal bed, LOAD Temp - 460° or less.

CAT-3 Both set on high. (wide open) 15.5 lbs pre-burn
CAT-4 burn down to 10 lbs with damper open and doors cracked.
Then close and set for 1-hr pre-burn. STir 10 min's, 30 mins, 50 mins, 65 mins Level and Pack coal bed.
LOAD Temp [redacted] or less. 500 [redacted] -

CAT-Installed
All The SAme as above with diffrent pre-burn weights.

Low	[redacted] lbs	14 lbs	[redacted] less 450° or less
High	[redacted] lbs	14 lbs	526 or less
3	14 lbs	520 or less	4-4.5 lbs Kindling
2	14 lbs	450° or less	

Dan Whitcomb 11/30/17 R+D

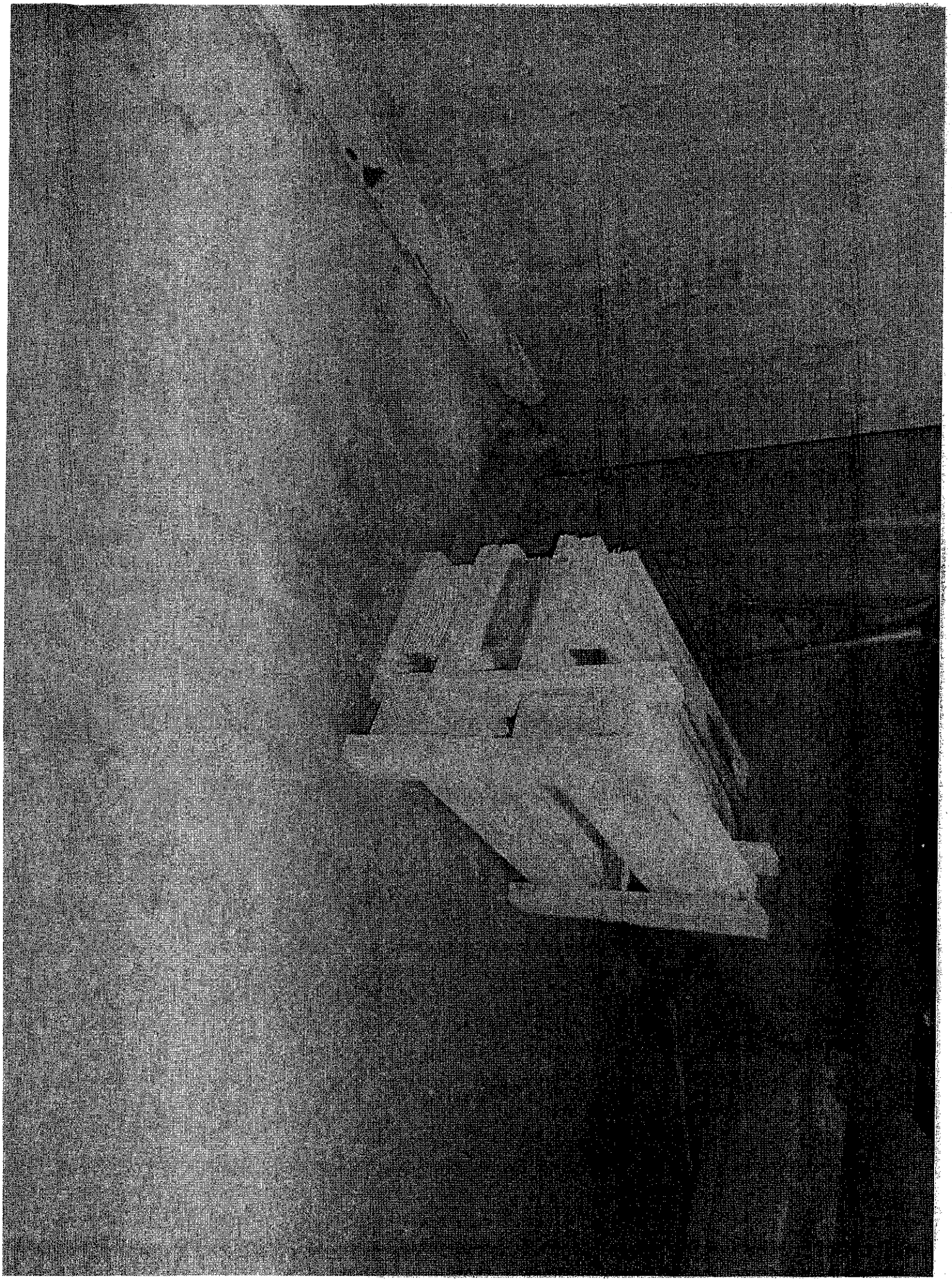

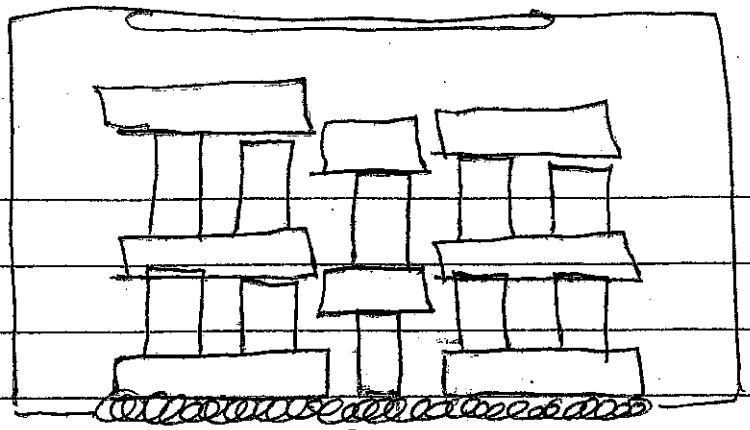

Front View of 2"x6" Pre-burn Conf.

Looking from front

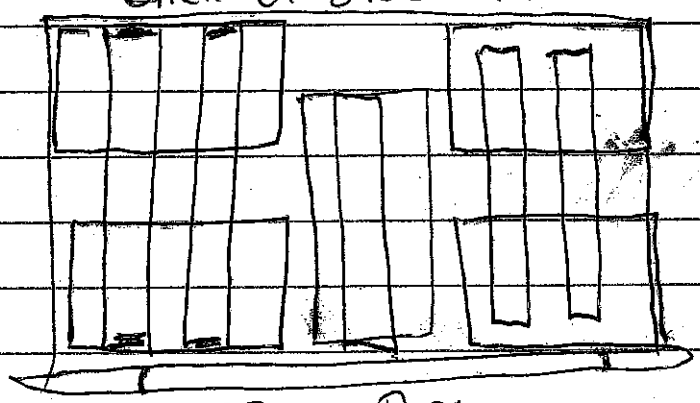

View from Top of Stove

4 2"x4"x6" one in each corner
Then 5 set on sides 2 on each side, one in center
Then one on each corner again the 2 on edge on each side + one lay down flat on middle 2x4 + so on.

(Should Take 18 to 23 pc's to get pre-burn weight.)

Dan Whitcomb
11/30/17
R+D

Run 1

Wood Heater Preburn Data - ASTM E2780

Run:	**1**

Technician Signature:

Manufacturer:	Hearth & Home
Model:	Intrepiod IV Catalytic
Tracking No.:	2264
Project No.:	0135WS038E
Test Date:	1/3/18
Beginning Clock Time:	10:04

Preburn Fuel Data

Fuel Piece Lengths (in.):	6
Total Preburn Weight (lb):	13.7
Fuel Moisture Readings (% DB):	23.5
	19.1
	20.8
	23.4
Avg Preburn Moisture (% DB):	**21.70**

Coal Bed Range (lb):	**1.7** (min)	**2.1** (max)

			Temperatures (°F)							
Elapsed Time (min)	Scale (lb)	Stack Draft (in H_2O)	FB Top	FB Bottom	FB Back	FB Left	FB Right	Avg. FB	Stack	Ambient
0	9.9	-0.071	404	139	328	237	148	251.2	881	70
1	9.7	-0.062	419	143	361	241	153	263.4	579	70
2	9.6	-0.056	413	148	390	246	157	270.8	473	70
3	9.5	-0.05	405	153	412	251	158	275.8	418	70
4	9.4	-0.048	397	158	429	255	159	279.6	386	70
5	9.4	-0.044	388	163	441	259	161	282.4	367	70
6	9.3	-0.042	382	168	450	263	163	285.2	353	70
7	9.2	-0.041	378	173	457	266	165	287.8	342	70
8	9.2	-0.04	376	178	463	269	168	290.8	335	70
9	9.1	-0.039	377	183	467	271	170	293.6	329	70
10	9	-0.038	381	188	470	273	172	296.8	324	70
11	9	-0.038	388	193	472	275	174	300.4	321	70
12	10	-0.084	384	197	471	276	176	300.8	362	70
13	8.7	-0.04	376	202	477	278	178	302.2	346	70
14	8.6	-0.042	370	206	489	280	180	305	346	70
15	8.5	-0.042	369	210	505	281	182	309.4	350	70
16	8.3	-0.043	375	214	524	284	184	316.2	357	70
17	8.2	-0.044	387	218	544	288	186	324.6	361	70
18	8.1	-0.044	397	221	564	293	188	332.6	366	70
19	7.9	-0.043	404	224	584	297	190	339.8	367	70
20	7.8	-0.043	413	227	602	301	192	347	368	70
21	7.7	-0.043	422	230	618	305	194	353.8	368	70
22	7.6	-0.043	431	233	631	310	196	360.2	368	70
23	7.5	-0.042	439	235	644	314	198	366	370	70
24	7.4	-0.042	447	238	655	319	201	372	368	70
25	7.3	-0.042	456	240	664	324	203	377.4	367	70
26	7.2	-0.041	463	242	673	328	206	382.4	369	70
27	7.1	-0.041	470	244	679	333	208	386.8	366	71
28	6.9	-0.042	477	246	685	338	211	391.4	368	71
29	6.8	-0.041	484	247	688	343	214	395.2	367	70
30	6.7	-0.041	489	248	689	348	216	398	365	71
31	6.6	-0.047	484	250	683	352	219	397.6	546	71
32	6.4	-0.045	477	251	685	358	224	399	413	70
33	6.3	-0.044	476	253	687	361	229	401.2	385	71
34	6.1	-0.044	476	255	692	364	233	404	377	71
35	6	-0.042	479	257	699	366	237	407.6	372	70
36	5.9	-0.042	480	258	708	367	243	411.2	370	71
37	5.8	-0.041	479	259	716	368	250	414.4	368	70
38	5.7	-0.041	480	261	722	370	257	418	367	70

Wood Heater Preburn Data - ASTM E2780

Run:	**1**

Technician Signature:

Manufacturer:	Hearth & Home
Model:	Intrepiod IV Catalytic
Tracking No.:	2264
Project No.:	0135WS038E
Test Date:	1/3/18
Beginning Clock Time:	10:04

Preburn Fuel Data

Fuel Piece Lengths (in.):	6
Total Preburn Weight (lb):	13.7
Fuel Moisture Readings (% DB):	23.5
	19.1
	20.8
	23.4
Avg Preburn Moisture (% DB):	**21.70**

Coal Bed Range (lb):	**1.7** (min)	**2.1** (max)

			Temperatures (°F)							
Elapsed Time (min)	Scale (lb)	Stack Draft (in H_2O)	FB Top	FB Bottom	FB Back	FB Left	FB Right	Avg. FB	Stack	Ambient
39	5.6	-0.041	484	262	729	371	264	422	364	70
40	5.5	-0.04	484	263	734	371	271	424.6	364	71
41	5.4	-0.04	492	264	740	372	278	429.2	363	70
42	5.2	-0.041	501	265	744	373	285	433.6	363	70
43	5.2	-0.04	503	266	748	373	291	436.2	361	70
44	5.1	-0.039	504	267	750	373	298	438.4	359	71
45	5	-0.038	505	268	752	373	305	440.6	356	70
46	4.9	-0.039	507	269	754	373	312	443	356	70
47	4.8	-0.039	509	269	757	373	318	445.2	355	70
48	4.7	-0.039	511	270	759	373	324	447.4	353	70
49	4.6	-0.038	515	271	760	373	330	449.8	353	70
50	4.5	-0.038	514	272	761	372	336	451	349	71
51	15.5	-0.124	512	272	758	372	341	451	518	71
52	4.2	-0.043	507	273	760	374	347	452.2	441	71
53	4.1	-0.042	514	274	760	375	351	454.8	382	71
54	4	-0.039	519	274	762	377	354	457.2	360	71
55	3.9	-0.039	522	275	765	378	357	459.4	351	71
56	3.8	-0.038	525	276	768	379	360	461.6	344	71
57	3.7	-0.037	525	276	771	381	362	463	340	71
58	3.6	-0.037	525	277	774	382	363	464.2	338	71
59	3.5	-0.038	523	277	775	383	365	464.6	334	71
60	3.5	-0.035	521	278	777	385	366	465.4	333	71
61	3.4	-0.035	513	279	777	388	366	464.6	331	71
62	3.3	-0.035	511	280	777	391	367	465.2	329	71
63	3.2	-0.034	510	281	775	393	367	465.2	325	71
64	3.2	-0.034	508	281	774	394	367	464.8	322	71
65	3.1	-0.033	505	282	771	396	367	464.2	321	71
66	3.1	-0.033	505	283	767	397	367	463.8	319	71
67	3	-0.033	506	284	763	398	367	463.6	318	71
68	3	-0.033	506	285	757	399	366	462.6	316	71
69	3	-0.032	504	286	751	400	366	461.4	313	71
70	2.9	-0.032	503	287	745	402	366	460.6	311	71
71	2.3	-0.06	498	289	736	403	365	458.2	409	71
72	2.8	-0.033	510	290	730	402	365	459.4	346	71
73	2.8	-0.032	529	291	724	402	365	462.2	323	72
74	2.7	-0.031	536	293	718	403	365	463	314	71
75	2.7	-0.03	537	294	713	403	365	462.4	309	71
76	2.7	-0.029	534	295	707	403	365	460.8	308	72
77	2.6	-0.029	529	296	701	403	365	458.8	306	71

Wood Heater Preburn Data - ASTM E2780

Run:	**1**

Technician Signature: _____

Manufacturer:	Hearth & Home
Model:	Intrepiod IV Catalytic
Tracking No.:	2264
Project No.:	0135WS038E
Test Date:	1/3/18
Beginning Clock Time:	10:04

Preburn Fuel Data

Fuel Piece Lengths (in.):	6
Total Preburn Weight (lb):	13.7
Fuel Moisture Readings (% DB):	23.5
	19.1
	20.8
	23.4
Avg Preburn Moisture (% DB):	**21.70**

Coal Bed Range (lb):	**1.7** (min)	**2.1** (max)

			Temperatures (°F)							
Elapsed Time (min)	Scale (lb)	Stack Draft (in H_2O)	FB Top	FB Bottom	FB Back	FB Left	FB Right	Avg. FB	Stack	Ambient
78	2.6	-0.029	523	298	695	404	365	457	303	71
79	2.6	-0.028	522	299	687	403	365	455.2	302	71
80	2.6	-0.028	520	301	680	403	365	453.8	300	71
81	2.5	-0.027	518	302	673	403	366	452.4	298	71
82	2.5	-0.027	515	304	666	403	366	450.8	296	71
83	2.5	-0.026	512	305	658	402	366	448.6	296	72
84	2.5	-0.027	509	307	651	402	366	447	295	72
85	2.4	-0.027	507	308	644	402	367	445.6	295	72
86	2.4	-0.026	503	310	636	401	367	443.4	293	72
87	2.4	-0.026	502	311	628	401	366	441.6	290	71
88	2.4	-0.026	501	313	621	400	367	440.4	288	72
89	2.4	-0.025	498	315	614	399	367	438.6	286	72
90	2.3	-0.024	497	316	607	399	367	437.2	285	72
91	2.1	-0.027	497	318	598	399	367	435.8	343	72
92	2.1	-0.025	498	319	593	398	367	435	299	72
93	2.1	-0.025	500	321	588	398	368	435	284	72
94	2	-0.025	499	322	584	398	368	434.2	279	72
95	2	-0.023	495	324	580	398	368	433	275	72
96	2	-0.023	493	325	576	398	368	432	273	72
97	2	-0.022	492	326	573	398	368	431.4	271	72

Wood Heater Test Fuel Data - ASTM E2780

Manufacturer:	Hearth & Home
Model:	Intrepiod IV Catalytic
Tracking No.:	2264
Project No.:	0135WS038E
Test Date:	1/3/2018
Run No.:	1

Firebox Volume (ft^3):	1.31
Fuel Piece Length (in):	13.5
2x4 Crib Weight (lb):	8.5
4x4 Crib Weight (lb):	0

Total Fuel Weight (Dry Basis, lb):	7.2	
Fuel Density (lb/ft^3, Dry Basis):	25.96	OK
Loading Density (lb/ft^3, Wet Basis):	6.49	OK
2x4 Percentage:	N/A	N/A

Coal Bed Range (20-25%): **1.7 - 2.125**

Test Fuel Piece	Weight (lb)	Size	Readings (Dry Basis %)			Dry Weight (lb)
1	1.3	2"x 4"	21.3	20.6	19.7	1.08
2	1.3	2"x 4"	22.5	21.3	20.0	1.07
3	1.2	2"x 4"	19.9	19.7	19.0	1.00
4	1.2	2"x 4"	18.9	19.3	19.2	1.01
5	1.4	2"x 4"	20.8	19.5	21.4	1.16

Spacer Readings (Dry Basis %)			
10.0	8.0		
10.5	15.2		
11.3	15.6		
11.4	8.0		
14.9	7.8		
14.8			
10.8			
7.5			
14.9			
15.2			
13.0			
14.8			
11.2			

Technician Signature: 

Wood Heater Test Data - ASTM E2780 / ASTM E2515

Run: 1

Manufacturer: Hearth & Home
Model: Intrepiod IV Catalytic
Tracking No.: 2264
Project No.: 0135WS038E
Test Date: 03-Jan-18
Beginning Clock Time: 10:43

Total Sampling Time: 195 min
Recording Interval: 1 min
Background Sample Volume: _____ cubic feet

Meter Box Y Factor: 0.981 (1) 0.984 (2) _____ (Amb)

Barometric Pressure:	Begin	Middle	End	Average
	30.19	30.16	30.14	30.16 "Hg

OMNI Equipment Numbers: _____

PM Control Modules: 0035, 0036
Dilution Tunnel MW(dry): 29.00 lb/lb-mole
Dilution Tunnel MW(wet): 28.78 lb/lb-mole
Dilution Tunnel H2O: 2.00 percent
Dilution Tunnel Static: -0.180 "H2O
Tunnel Area: 0.19635 ft2
Pitot Tube Cp: 0.99

Avg. Tunnel Velocity: 13.15 ft/sec.
Initial Tunnel Flow: 143.8 scfm
Average Tunnel Flow: 146.4 scfm
Post-Test Leak Check (1): 0.000 cfm @ 6 in. Hg
Post-Test Leak Check (2): 0.000 cfm @ 7 in. Hg
Average Test Piece Fuel Moisture: 20.21 Dry Basis %

Technician Signature: _____

Velocity Traverse Data	Pt.1	Pt.2	Pt.3	Pt.4	Pt.5	Pt.6	Pt.7	Pt.8	Center	
Initial dP	0.026	0.046	0.038	0.030	0.030	0.048	0.050	0.030	0.049	"H2O
Temp:	96	93	93	93	92	92	92	92	93	°F

V_{strav} 13.16 ft/sec V_{scent} 14.95 ft/sec F_p 0.880

	Particulate Sampling Data														Fuel Weight (lb)		Temperature Data (°F)												Stack Gas Data		
Elapsed Time (min)	Gas Meter 1 (ft^3)	Gas Meter 2 (ft^3)	Sample Rate 1 (cfm)	Sample Rate 2 (cfm)	Orifice dH 1 ("H_2O)	Meter 1 Temp (°F)	Meter 1 Vacuum ("Hg)	Orifice dH 2 ("H_2O)	Meter 2 Temp (°F)	Meter 2 Vacuum ("Hg)	Dilution Tunnel (°F)	Dilution Tunnel Center dP	Pro. Rate 1	Pro. Rate 2	Scale Reading	Weight Change	Firebox Top	Firebox Bottom	Firebox Back	Firebox Left	Firebox Right	Avg. Stove Surface	Catalyst Exit	Stack	Filter 1	Dryer Exit 1	Filter 2	Dryer Exit 2	Ambient	Draft ("H_2O)	CO_2 (%)	CO (%)
0	0.000	0.000			0.04	74	1.84	0.49	75	0.9	95	0.049			8.5		486	328	562	398	367	428	897	265	70	67	70	67	72	-0.022	8.59	0
1	0.161	0.155	0.16	0.16	1.33	74	2	1.09	74	1.1	125	0.049	103	100	8.5	0	475	329	556	398	367	425	879	261	71	71	71	69	72	-0.048	8.59	0
2	0.323	0.314	0.16	0.16	1.35	74	1.99	1.16	75	1.1	98	0.049	101	100	8.4	-0.1	454	329	554	396	366	420	995	255	71	72	71	69	72	-0.023	8.59	0
3	0.485	0.478	0.16	0.16	1.33	74	1.98	1.16	75	1.1	92	0.049	101	102	8.3	-0.1	439	329	555	394	365	416	1042	252	71	72	71	69	71	-0.025	8.59	0.1
4	0.646	0.639	0.16	0.16	1.34	74	1.98	1.16	75	1.1	91	0.049	100	100	8.3	0	425	329	557	392	363	413	1057	254	71	72	71	69	72	-0.025	8.59	0.01
5	0.808	0.802	0.16	0.16	1.34	74	1.97	1.16	75	1.1	90	0.049	101	101	8.3	0	416	330	561	391	362	412	1073	258	71	72	71	69	71	-0.025	8.59	0.01
6	0.970	0.964	0.16	0.16	1.34	74	1.97	1.16	75	1.1	89	0.049	101	101	8.2	-0.1	405	330	565	389	360	410	1085	261	72	72	72	69	72	-0.027	8.47	0.01
7	1.132	1.127	0.16	0.16	1.33	75	1.98	1.16	75	1.1	90	0.049	100	101	8.1	-0.1	396	330	571	387	358	408	1089	265	72	72	72	69	71	-0.027	8.4	0.01
8	1.294	1.289	0.16	0.16	1.32	75	1.98	1.15	75	1.1	90	0.049	100	101	8.1	0	389	330	577	385	355	407	1086	272	72	72	72	69	71	-0.027	8.09	0.01
9	1.455	1.451	0.16	0.16	1.33	75	1.97	1.16	75	1.1	90	0.049	100	101	8.0	-0.1	382	329	583	383	352	406	1094	275	72	72	72	69	71	-0.028	8.31	0.01
10	1.615	1.613	0.16	0.16	1.33	75	1.97	1.16	75	1.1	90	0.049	99	101	7.9	-0.1	382	329	588	380	349	406	1100	278	72	72	72	69	71	-0.029	8.35	0.01
11	1.777	1.776	0.16	0.16	1.33	75	1.96	1.15	75	1.1	90	0.049	100	101	7.9	0	380	328	593	378	347	405	1100	280	72	72	72	69	72	-0.030	8.02	0.03
12	1.939	1.938	0.16	0.16	1.33	75	1.96	1.15	75	1.1	90	0.049	100	101	7.8	-0.1	381	328	598	375	344	405	1105	283	72	72	72	69	71	-0.029	8.2	0.01
13	2.099	2.099	0.16	0.16	1.31	75	1.96	1.15	75	1.1	91	0.049	99	100	7.7	-0.1	388	328	603	372	341	406	1113	288	72	72	72	69	71	-0.031	8.73	0.02
14	2.260	2.261	0.16	0.16	1.31	75	1.96	1.15	76	1.1	91	0.049	100	101	7.7	0	390	327	608	369	338	406	1110	290	72	72	72	69	72	-0.031	8.21	0.07
15	2.421	2.423	0.16	0.16	1.32	75	1.96	1.15	76	1.1	91	0.049	100	101	7.6	-0.1	392	326	611	366	336	406	1105	291	72	72	72	69	72	-0.031	8.07	0.06
16	2.582	2.586	0.16	0.16	1.32	76	1.95	1.14	76	1.1	90	0.049	100	101	7.5	-0.1	395	326	615	363	333	406	1112	295	72	72	72	69	71	-0.033	8.72	0.03
17	2.743	2.747	0.16	0.16	1.31	76	1.96	1.14	76	1.1	91	0.049	100	100	7.4	-0.1	401	325	619	361	330	407	1148	300	72	72	72	69	71	-0.034	9.74	0.04
18	2.903	2.909	0.16	0.16	1.31	76	1.96	1.14	76	1.1	92	0.049	99	101	7.3	-0.1	413	324	623	358	328	409	1150	303	72	72	72	69	71	-0.033	9.63	0.03
19	3.064	3.071	0.16	0.16	1.31	76	1.96	1.14	76	1.1	91	0.049	100	101	7.2	-0.1	423	324	627	356	326	411	1153	305	73	72	72	69	71	-0.032	9.37	0.03
20	3.225	3.233	0.16	0.16	1.32	76	1.96	1.14	77	1.1	92	0.049	100	101	7.1	-0.1	429	322	632	353	324	412	1181	305	73	72	72	69	71	-0.034	10.06	0.02
21	3.386	3.394	0.16	0.16	1.31	76	1.96	1.14	77	1.1	92	0.049	100	100	7.1	0	431	322	637	351	322	413	1201	307	73	72	72	69	72	-0.034	10.17	0.01
22	3.547	3.556	0.16	0.16	1.31	77	1.96	1.14	77	1.1	92	0.049	100	101	7.0	-0.1	432	321	642	348	320	413	1217	311	73	72	72	69	71	-0.035	10.27	0.01
23	3.707	3.718	0.16	0.16	1.31	77	1.96	1.14	77	1.1	93	0.049	99	101	6.9	-0.1	431	320	648	347	318	413	1232	311	73	72	72	69	71	-0.034	10.44	0.02
24	3.868	3.880	0.16	0.16	1.31	77	1.96	1.14	77	1.1	93	0.049	100	101	6.8	-0.1	427	319	655	344	316	412	1255	314	73	72	73	69	72	-0.035	11.06	0.03
25	4.030	4.041	0.16	0.16	1.31	77	1.97	1.14	77	1.1	93	0.049	100	100	6.7	-0.1	424	318	662	342	315	412	1234	317	73	72	73	69	71	-0.035	10.1	0.01
26	4.191	4.203	0.16	0.16	1.31	77	1.96	1.14	77	1.1	93	0.049	100	101	6.6	-0.1	421	317	667	341	313	412	1217	318	73	72	73	69	72	-0.035	9.56	0.01
27	4.351	4.365	0.16	0.16	1.31	77	1.96	1.14	78	1.1	93	0.049	99	101	6.5	-0.1	419	316	672	340	312	412	1216	318	73	72	73	69	71	-0.036	9.45	0.01
28	4.512	4.527	0.16	0.16	1.32	78	1.96	1.13	78	1.1	93	0.049	100	101	6.4	-0.1	419	315	676	338	310	412	1215	319	73	72	73	69	72	-0.035	9.41	0.01
29	4.673	4.688	0.16	0.16	1.32	78	1.96	1.14	78	1.1	93	0.049	100	100	6.4	0	422	314	680	337	309	412	1216	318	73	73	73	69	71	-0.035	9.39	0.01
30	4.835	4.850	0.16	0.16	1.31	78	1.96	1.14	78	1.1	94	0.049	100	101	6.3	-0.1	426	313	683	336	307	413	1246	318	73	73	73	69	72	-0.035	10.22	0.02
31	4.996	5.013	0.16	0.16	1.31	78	1.97	1.14	78	1.1	94	0.049	100	101	6.2	-0.1	430	312	686	335	306	414	1255	322	73	73	73	69	72	-0.035	10.34	0.01
32	5.157	5.174	0.16	0.16	1.31	78	1.96	1.14	78	1.1	94	0.049	100	100	6.1	-0.1	437	311	690	335	305	416	1273	322	74	73	73	69	72	-0.036	10.54	0.01
33	5.318	5.336	0.16	0.16	1.31	78	1.95	1.14	78	1.1	94	0.049	100	101	6.0	-0.1	441	310	694	334	304	417	1301	323	74	73	73	69	71	-0.036	11.12	0.03
34	5.479	5.498	0.16	0.16	1.32	78	1.97	1.14	79	1.1	94	0.049	100	100	5.9	-0.1	446	309	699	334	303	418	1324	325	74	73	73	69	72	-0.035	11.37	0.03
35	5.641	5.660	0.16	0.16	1.31	79	1.97	1.14	79	1.1	94	0.049	100	100	5.8	-0.1	450	308	705	333	302	420	1326	326	74	73	73	70	72	-0.037	11.19	0.03
36	5.802	5.822	0.16	0.16	1.31	79	1.96	1.14	79	1.1	94	0.049	99	100	5.8	0	454	307	711	333	301	421	1324	325	74	73	73	70	72	-0.037	11.26	0.08

Wood Heater Test Data - ASTM E2780 / ASTM E2515

Run: 1

Manufacturer: Hearth & Home
Model: Intrepiod IV Catalytic
Tracking No.: 2264
Project No.: 0135WS038E
Test Date: 03-Jan-18
Beginning Clock Time: 10:43

Total Sampling Time: 195 min
Recording Interval: 1 min
Background Sample Volume: _____ cubic feet

Meter Box Y Factor: 0.981 (1) 0.984 (2) _____ (Amb)

Barometric Pressure:	Begin	Middle	End	Average
	30.19	30.16	30.14	30.16 "Hg

OMNI Equipment Numbers: _____

PM Control Modules: 0035, 0036
Dilution Tunnel MW(dry): 29.00 lb/lb-mole
Dilution Tunnel MW(wet): 28.78 lb/lb-mole
Dilution Tunnel H2O: 2.00 percent
Dilution Tunnel Static: -0.180 "H2O
Tunnel Area: 0.19635 ft2
Pitot Tube Cp: 0.99

Avg. Tunnel Velocity: 13.15 ft/sec.
Initial Tunnel Flow: 143.8 scfm
Average Tunnel Flow: 146.4 scfm
Post-Test Leak Check (1): 0.000 cfm @ 6 in. Hg
Post-Test Leak Check (2): 0.000 cfm @ 7 in. Hg
Average Test Piece Fuel Moisture: 20.21 Dry Basis %

Technician Signature: _____

Velocity Traverse Data	Pt.1	Pt.2	Pt.3	Pt.4	Pt.5	Pt.6	Pt.7	Pt.8	Center	
Initial dP	0.026	0.046	0.038	0.030	0.030	0.048	0.050	0.030	0.049	"H2O
Temp:	96	93	93	93	92	92	92	92	93	°F

V_{strav} 13.16 ft/sec V_{scent} 14.95 ft/sec F_p 0.880

	Particulate Sampling Data														Fuel Weight (lb)		Temperature Data (°F)												Stack Gas Data		
Elapsed Time (min)	Gas Meter 1 (ft^3)	Gas Meter 2 (ft^3)	Sample Rate 1 (cfm)	Sample Rate 2 (cfm)	Orifice dH 1 ("H_2O)	Meter 1 Temp (°F)	Meter 1 Vacuum ("Hg)	Orifice dH 2 ("H_2O)	Meter 2 Temp (°F)	Meter 2 Vacuum ("Hg)	Dilution Tunnel (°F)	Dilution Tunnel Center dP	Pro. Rate 1	Pro. Rate 2	Scale Reading	Weight Change	Firebox Top	Firebox Bottom	Firebox Back	Firebox Left	Firebox Right	Avg. Stove Surface	Catalyst Exit	Stack	Filter 1	Dryer Exit 1	Filter 2	Dryer Exit 2	Ambient	Draft ("H_2O)	CO_2 (%)	CO (%)
37	5.963	5.983	0.16	0.16	1.34	79	1.99	1.14	79	1.1	94	0.049	99	100	5.7	-0.1	458	306	715	333	300	422	1321	322	74	73	73	70	72	-0.035	10.84	0.24
38	6.125	6.145	0.16	0.16	1.34	79	1.99	1.14	79	1.1	93	0.049	100	100	5.6	-0.1	461	305	720	332	300	424	1323	320	74	73	73	70	72	-0.036	11.1	0.22
39	6.288	6.308	0.16	0.16	1.34	79	1.99	1.14	79	1.1	93	0.049	101	101	5.5	-0.1	465	304	724	332	299	425	1322	320	74	73	73	70	72	-0.035	10.84	0.16
40	6.452	6.470	0.16	0.16	1.34	79	1.99	1.14	79	1.1	93	0.049	101	100	5.4	-0.1	467	304	728	332	299	426	1322	319	74	73	73	70	72	-0.034	10.95	0.1
41	6.615	6.632	0.16	0.16	1.33	79	1.99	1.14	79	1.1	93	0.049	101	100	5.3	-0.1	473	303	730	332	298	427	1324	318	74	73	73	70	71	-0.036	10.66	0.29
42	6.778	6.794	0.16	0.16	1.33	79	1.99	1.14	80	1.1	94	0.049	101	100	5.3	0	477	302	733	332	298	428	1328	318	74	73	73	70	72	-0.035	10.69	0.26
43	6.940	6.956	0.16	0.16	1.34	79	2	1.14	80	1.1	94	0.049	100	100	5.2	-0.1	484	301	736	332	297	430	1328	320	74	73	73	70	72	-0.036	10.97	0.21
44	7.103	7.118	0.16	0.16	1.34	80	1.99	1.14	80	1.1	94	0.049	100	100	5.1	-0.1	484	300	738	332	297	430	1339	324	74	73	74	70	72	-0.036	11.49	0.03
45	7.266	7.280	0.16	0.16	1.34	80	2	1.13	80	1.1	94	0.049	100	100	5.0	-0.1	489	299	741	333	297	432	1362	324	74	73	74	70	72	-0.036	11.75	0.06
46	7.429	7.442	0.16	0.16	1.34	80	1.99	1.14	80	1.1	94	0.049	100	100	4.9	-0.1	496	299	744	333	297	434	1357	326	74	73	74	70	72	-0.035	11.76	0.11
47	7.592	7.604	0.16	0.16	1.34	80	1.99	1.14	80	1.1	94	0.049	100	100	4.8	-0.1	507	298	747	334	297	437	1352	325	74	73	74	70	71	-0.037	11.84	0.06
48	7.756	7.767	0.16	0.16	1.34	80	1.99	1.14	80	1.1	95	0.049	101	101	4.7	-0.1	515	297	751	334	297	439	1360	328	74	73	74	70	71	-0.036	11.59	0.36
49	7.919	7.929	0.16	0.16	1.34	80	1.99	1.14	80	1.1	95	0.049	101	100	4.6	-0.1	520	297	754	335	298	441	1366	328	74	73	74	70	72	-0.037	11.82	0.39
50	8.082	8.091	0.16	0.16	1.33	80	2	1.14	80	1.1	95	0.049	101	100	4.5	-0.1	525	296	756	336	298	442	1383	328	74	73	74	70	72	-0.037	12.1	0.64
51	8.245	8.253	0.16	0.16	1.33	80	2	1.14	81	1.1	95	0.049	101	100	4.4	-0.1	528	295	759	337	299	444	1402	329	74	73	74	70	72	-0.037	12.76	0.68
52	8.408	8.416	0.16	0.16	1.34	80	1.99	1.14	81	1.1	95	0.049	101	101	4.4	0	535	294	763	338	300	446	1414	330	74	73	74	70	72	-0.037	12.7	0.6
53	8.571	8.578	0.16	0.16	1.34	80	1.99	1.14	81	1.1	95	0.049	101	100	4.2	-0.2	540	294	766	339	301	448	1409	331	74	73	74	70	72	-0.036	12.33	0.65
54	8.734	8.740	0.16	0.16	1.34	80	2	1.14	81	1.1	95	0.049	101	100	4.2	0	542	293	769	340	302	449	1419	332	74	73	74	70	72	-0.037	13.03	0.28
55	8.897	8.902	0.16	0.16	1.34	81	2	1.14	81	1.1	94	0.049	100	100	4.1	-0.1	544	293	772	341	303	451	1405	330	74	73	74	70	72	-0.037	12.5	0.73
56	9.062	9.065	0.16	0.16	1.33	81	1.99	1.14	81	1.1	94	0.049	101	101	4.0	-0.1	548	292	775	342	304	452	1404	328	74	73	74	70	71	-0.037	12.66	0.35
57	9.225	9.227	0.16	0.16	1.34	81	1.99	1.14	81	1.1	95	0.049	100	100	3.9	-0.1	551	291	778	343	306	454	1415	330	74	73	74	70	72	-0.036	12.43	0.57
58	9.388	9.389	0.16	0.16	1.34	81	2	1.14	81	1.2	95	0.049	100	100	3.8	-0.1	551	291	781	344	307	455	1432	331	74	73	74	70	72	-0.036	13.11	0.32
59	9.551	9.552	0.16	0.16	1.33	81	2	1.14	81	1.2	95	0.049	100	101	3.7	-0.1	553	290	784	345	308	456	1434	331	74	73	74	70	72	-0.036	12.96	0.67
60	9.714	9.714	0.16	0.16	1.34	81	1.99	1.14	81	1.1	95	0.049	100	100	3.6	-0.1	556	290	786	346	310	458	1443	330	74	74	74	70	72	-0.037	12.97	0.44
61	9.880	9.877	0.17	0.16	1.38	81	1.89	1.14	81	1.1	95	0.049	102	101	3.5	-0.1	558	289	789	347	311	459	1442	330	75	74	74	70	72	-0.036	13.13	0.83
62	10.044	10.039	0.16	0.16	1.34	81	1.98	1.13	81	1.1	95	0.049	101	100	3.4	-0.1	561	289	792	348	313	461	1441	329	76	74	74	70	72	-0.036	12.77	0.36
63	10.208	10.201	0.16	0.16	1.35	81	1.98	1.14	82	1.1	95	0.049	101	100	3.3	-0.1	563	288	795	349	314	462	1448	329	76	74	74	70	72	-0.035	12.6	0.74
64	10.371	10.363	0.16	0.16	1.35	81	1.98	1.14	82	1.1	95	0.049	100	100	3.2	-0.1	567	288	798	350	316	464	1458	331	76	74	74	70	72	-0.037	13.1	0.56
65	10.535	10.527	0.16	0.16	1.35	81	1.99	1.14	82	1.1	96	0.049	101	101	3.2	0	568	287	801	352	317	465	1470	332	76	74	74	70	72	-0.036	13.27	0.55
66	10.700	10.688	0.16	0.16	1.35	81	1.98	1.13	82	1.1	95	0.049	102	99	3.1	-0.1	569	287	804	353	318	466	1475	332	76	74	74	70	72	-0.036	13.37	0.56
67	10.864	10.850	0.16	0.16	1.35	81	1.98	1.14	82	1.1	95	0.049	101	100	3.0	-0.1	571	287	808	354	320	468	1474	333	76	74	74	70	72	-0.037	13.42	0.47
68	11.027	11.012	0.16	0.16	1.34	82	1.99	1.14	82	1.2	95	0.049	100	100	2.9	-0.1	573	286	811	356	322	470	1475	331	76	74	74	70	72	-0.037	13.46	0.39
69	11.191	11.175	0.16	0.16	1.34	82	1.98	1.14	82	1.1	96	0.049	101	101	2.8	-0.1	577	286	814	357	323	471	1466	333	76	74	74	70	72	-0.036	13.33	0.32
70	11.355	11.337	0.16	0.16	1.34	82	1.99	1.14	82	1.1	96	0.049	101	100	2.7	-0.1	580	285	816	358	325	473	1444	331	76	74	74	70	72	-0.036	12.74	0.16
71	11.518	11.499	0.16	0.16	1.35	82	1.98	1.14	82	1.1	96	0.049	100	100	2.6	-0.1	583	285	817	360	327	474	1423	330	76	74	74	70	72	-0.035	12.37	0.29
72	11.682	11.661	0.16	0.16	1.34	82	1.98	1.14	82	1.1	95	0.049	101	100	2.6	0	585	285	817	361	328	475	1412	329	76	74	74	70	72	-0.035	11.71	0.33
73	11.846	11.824	0.16	0.16	1.35	82	1.98	1.14	82	1.1	95	0.049	101	101	2.5	-0.1	584	284	817	362	330	475	1394	325	76	74	74	70	72	-0.034	11.11	0.2

Wood Heater Test Data - ASTM E2780 / ASTM E2515

Run: 1

Manufacturer: Hearth & Home
Model: Intrepiod IV Catalytic
Tracking No.: 2264
Project No.: 0135WS038E
Test Date: 03-Jan-18
Beginning Clock Time: 10:43

Total Sampling Time: 195 min
Recording Interval: 1 min
Background Sample Volume: _____ cubic feet

Meter Box Y Factor: 0.981 (1) 0.984 (2) _____ (Amb)

Barometric Pressure:	Begin	Middle	End	Average
	30.19	30.16	30.14	30.16 "Hg

OMNI Equipment Numbers: _____

PM Control Modules: 0035, 0036
Dilution Tunnel MW(dry): 29.00 lb/lb-mole
Dilution Tunnel MW(wet): 28.78 lb/lb-mole
Dilution Tunnel H2O: 2.00 percent
Dilution Tunnel Static: -0.180 "H2O
Tunnel Area: 0.19635 ft2
Pitot Tube Cp: 0.99

Avg. Tunnel Velocity: 13.15 ft/sec.
Initial Tunnel Flow: 143.8 scfm
Average Tunnel Flow: 146.4 scfm
Post-Test Leak Check (1): 0.000 cfm @ 6 in. Hg
Post-Test Leak Check (2): 0.000 cfm @ 7 in. Hg
Average Test Piece Fuel Moisture: 20.21 Dry Basis %

Technician Signature: _____

Velocity Traverse Data	Pt.1	Pt.2	Pt.3	Pt.4	Pt.5	Pt.6	Pt.7	Pt.8	Center	
Initial dP	0.026	0.046	0.038	0.030	0.030	0.048	0.050	0.030	0.049	"H2O
Temp:	96	93	93	93	92	92	92	92	93	°F

V_{strav} 13.16 ft/sec V_{scent} 14.95 ft/sec F_p 0.880

	Particulate Sampling Data														Fuel Weight (lb)		Temperature Data (°F)												Stack Gas Data		
Elapsed Time (min)	Gas Meter 1 (ft^3)	Gas Meter 2 (ft^3)	Sample Rate 1 (cfm)	Sample Rate 2 (cfm)	Orifice dH 1 ("H_2O)	Meter 1 Temp (°F)	Meter 1 Vacuum ("Hg)	Orifice dH 2 ("H_2O)	Meter 2 Temp (°F)	Meter 2 Vacuum ("Hg)	Dilution Tunnel (°F)	Dilution Tunnel Center dP	Pro. Rate 1	Pro. Rate 2	Scale Reading	Weight Change	Firebox Top	Firebox Bottom	Firebox Back	Firebox Left	Firebox Right	Avg. Stove Surface	Catalyst Exit	Stack	Filter 1	Dryer Exit 1	Filter 2	Dryer Exit 2	Ambient	Draft ("H_2O)	CO_2 (%)	CO (%)
74	12.010	11.987	0.16	0.16	1.35	82	1.98	1.14	82	1.1	95	0.049	101	101	2.5	0	583	284	816	364	332	476	1382	325	76	74	74	70	72	-0.035	10.97	0.22
75	12.174	12.149	0.16	0.16	1.35	82	1.99	1.14	82	1.2	95	0.049	101	100	2.4	-0.1	580	284	814	365	333	475	1362	324	75	74	74	70	72	-0.034	10.65	0.13
76	12.338	12.311	0.16	0.16	1.35	82	1.97	1.14	82	1.2	95	0.049	101	100	2.3	-0.1	578	284	812	366	334	475	1341	322	75	74	74	70	72	-0.033	10.66	0.05
77	12.503	12.473	0.17	0.16	1.35	82	1.97	1.14	82	1.1	95	0.049	101	100	2.3	0	576	283	809	368	335	474	1333	321	75	74	74	70	72	-0.033	10.59	0.02
78	12.667	12.637	0.16	0.16	1.34	82	1.99	1.14	82	1.1	95	0.049	101	101	2.2	-0.1	574	283	807	369	336	474	1319	319	75	74	74	70	72	-0.033	10.39	0.02
79	12.831	12.798	0.16	0.16	1.34	82	1.98	1.14	83	1.2	95	0.049	101	99	2.2	0	574	283	804	371	338	474	1315	318	75	74	74	71	72	-0.033	10.7	0.01
80	12.995	12.961	0.16	0.16	1.32	82	1.96	1.14	83	1.1	95	0.049	101	100	2.1	-0.1	571	282	800	373	339	473	1294	316	75	74	74	70	72	-0.034	9.93	0.01
81	13.157	13.123	0.16	0.16	1.33	82	1.95	1.14	83	1.2	94	0.049	99	100	2.1	0	567	282	797	376	339	472	1266	314	75	74	74	71	72	-0.033	9.24	0.01
82	13.320	13.286	0.16	0.16	1.33	82	1.96	1.14	83	1.2	94	0.049	100	100	2.0	-0.1	566	282	793	378	340	472	1240	315	75	74	74	71	72	-0.032	9.02	0.01
83	13.483	13.448	0.16	0.16	1.33	82	1.95	1.14	83	1.1	94	0.049	100	100	2.0	0	565	282	787	381	341	471	1202	313	75	74	74	71	72	-0.031	8.14	0.01
84	13.646	13.610	0.16	0.16	1.33	82	1.95	1.14	83	1.1	94	0.049	100	100	2.0	0	563	282	781	383	341	470	1171	312	75	74	74	71	72	-0.031	7.79	0.01
85	13.809	13.773	0.16	0.16	1.32	82	1.96	1.14	83	1.2	94	0.049	100	100	1.9	-0.1	562	282	774	385	342	469	1144	311	75	74	74	71	72	-0.031	7.62	0.01
86	13.973	13.935	0.16	0.16	1.33	82	1.95	1.14	83	1.1	94	0.049	101	100	1.9	0	560	282	766	388	342	468	1120	310	75	74	74	71	72	-0.030	7.63	0.01
87	14.135	14.099	0.16	0.16	1.32	82	1.95	1.13	83	1.1	93	0.049	99	101	1.9	0	556	282	758	389	343	466	1097	307	75	74	74	71	72	-0.030	7.19	0.02
88	14.298	14.261	0.16	0.16	1.32	82	1.96	1.14	83	1.1	94	0.049	100	100	1.9	0	554	282	750	391	344	464	1078	305	75	74	74	71	72	-0.029	7.15	0.03
89	14.461	14.423	0.16	0.16	1.32	82	1.96	1.14	83	1.1	94	0.049	100	100	1.9	0	552	282	741	393	345	463	1062	303	75	74	74	71	72	-0.030	7.05	0.04
90	14.624	14.586	0.16	0.16	1.33	82	1.95	1.14	83	1.1	93	0.049	100	100	1.8	-0.1	549	282	732	394	345	460	1046	303	75	74	74	70	72	-0.028	6.98	0.04
91	14.787	14.748	0.16	0.16	1.33	83	1.95	1.14	83	1.1	93	0.049	100	100	1.8	0	547	282	724	396	346	459	1030	301	75	74	74	70	72	-0.029	6.86	0.03
92	14.950	14.911	0.16	0.16	1.33	83	1.95	1.14	83	1.1	93	0.049	100	100	1.8	0	545	282	715	397	346	457	1018	299	75	74	74	70	72	-0.028	6.87	0.03
93	15.114	15.073	0.16	0.16	1.32	83	1.96	1.14	83	1.1	93	0.049	100	100	1.8	0	544	282	707	398	347	456	1006	296	75	74	74	70	72	-0.028	6.85	0.04
94	15.277	15.235	0.16	0.16	1.33	83	1.96	1.14	83	1.1	93	0.049	100	100	1.8	0	541	282	699	399	347	454	994	295	75	74	74	70	72	-0.027	6.71	0.04
95	15.440	15.398	0.16	0.16	1.32	83	1.95	1.14	83	1.1	92	0.049	100	100	1.7	-0.1	539	283	691	401	347	452	983	295	75	73	74	70	72	-0.027	6.73	0.06
96	15.603	15.562	0.16	0.16	1.32	83	1.96	1.13	83	1.1	93	0.049	100	101	1.7	0	536	283	683	402	348	450	973	295	75	73	74	70	72	-0.027	6.6	0.07
97	15.766	15.724	0.16	0.16	1.33	83	1.95	1.14	83	1.1	92	0.049	100	99	1.7	0	535	283	675	402	348	449	964	293	75	73	74	70	72	-0.027	6.51	0.08
98	15.929	15.886	0.16	0.16	1.33	83	1.95	1.14	83	1.1	93	0.049	100	100	1.7	0	535	283	668	403	349	448	954	292	75	73	74	70	72	-0.028	6.56	0.07
99	16.092	16.049	0.16	0.16	1.33	83	1.95	1.14	83	1.1	92	0.049	100	100	1.7	0	535	284	662	404	349	447	945	290	75	73	74	70	72	-0.026	6.43	0.08
100	16.255	16.211	0.16	0.16	1.33	83	1.95	1.14	83	1.1	93	0.049	100	100	1.7	0	534	284	655	405	350	446	937	289	75	73	74	70	72	-0.027	6.45	0.09
101	16.419	16.374	0.16	0.16	1.32	83	1.95	1.14	83	1.1	92	0.049	100	100	1.6	-0.1	531	285	649	405	350	444	931	289	75	73	74	70	72	-0.025	6.39	0.11
102	16.582	16.536	0.16	0.16	1.33	83	1.95	1.14	83	1.1	91	0.049	100	99	1.6	0	528	285	643	406	351	443	924	287	75	73	74	70	72	-0.026	6.34	0.12
103	16.746	16.699	0.16	0.16	1.32	83	1.95	1.14	83	1.1	91	0.049	100	100	1.6	0	527	285	636	406	351	441	919	285	75	73	74	70	72	-0.026	6.17	0.14
104	16.908	16.862	0.16	0.16	1.33	83	1.96	1.14	83	1.1	91	0.049	99	100	1.6	0	525	286	630	406	351	440	913	284	75	73	74	70	72	-0.025	6.24	0.16
105	17.072	17.025	0.16	0.16	1.33	83	1.95	1.14	83	1.1	92	0.049	100	100	1.6	0	524	286	624	407	351	438	907	284	75	73	74	70	72	-0.025	6.23	0.17
106	17.234	17.188	0.16	0.16	1.33	83	1.95	1.14	83	1.1	91	0.049	99	100	1.6	0	522	286	619	407	351	437	901	283	75	73	74	70	72	-0.025	6.1	0.18
107	17.398	17.350	0.16	0.16	1.33	83	1.95	1.14	83	1.1	91	0.049	100	99	1.5	-0.1	521	286	613	407	352	436	895	284	74	73	74	70	72	-0.025	6.06	0.2
108	17.561	17.513	0.16	0.16	1.33	83	1.95	1.14	83	1.1	92	0.049	100	100	1.5	0	520	286	608	407	352	435	889	284	74	73	74	70	72	-0.026	5.8	0.22
109	17.725	17.675	0.16	0.16	1.33	83	1.95	1.14	83	1.1	91	0.049	100	99	1.5	0	517	287	603	407	352	433	884	284	74	73	74	70	72	-0.025	5.77	0.25
110	17.888	17.839	0.16	0.16	1.33	83	1.96	1.14	83	1.1	92	0.049	100	101	1.5	0	516	287	598	407	352	432	878	283	74	73	74	70	72	-0.025	5.68	0.26

Wood Heater Test Data - ASTM E2780 / ASTM E2515

Run: 1

Manufacturer: Hearth & Home
Model: Intrepiod IV Catalytic
Tracking No.: 2264
Project No.: 0135WS038E
Test Date: 03-Jan-18
Beginning Clock Time: 10:43

Total Sampling Time: 195 min
Recording Interval: 1 min
Background Sample Volume: _____ cubic feet

Meter Box Y Factor: 0.981 (1) 0.984 (2) _____ (Amb)

Barometric Pressure:	Begin	Middle	End	Average
	30.19	30.16	30.14	30.16 "Hg

OMNI Equipment Numbers: _____

PM Control Modules: 0035, 0036
Dilution Tunnel MW(dry): 29.00 lb/lb-mole
Dilution Tunnel MW(wet): 28.78 lb/lb-mole
Dilution Tunnel H2O: 2.00 percent
Dilution Tunnel Static: -0.180 "H2O
Tunnel Area: 0.19635 ft2
Pitot Tube Cp: 0.99

Avg. Tunnel Velocity: 13.15 ft/sec.
Initial Tunnel Flow: 143.8 scfm
Average Tunnel Flow: 146.4 scfm
Post-Test Leak Check (1): 0.000 cfm @ 6 in. Hg
Post-Test Leak Check (2): 0.000 cfm @ 7 in. Hg
Average Test Piece Fuel Moisture: 20.21 Dry Basis %

Technician Signature: _____

Velocity Traverse Data	Pt.1	Pt.2	Pt.3	Pt.4	Pt.5	Pt.6	Pt.7	Pt.8	Center	
Initial dP	0.026	0.046	0.038	0.030	0.030	0.048	0.050	0.030	0.049	"H2O
Temp:	96	93	93	93	92	92	92	92	93	°F

V_{strav} 13.16 ft/sec V_{scent} 14.95 ft/sec F_p 0.880

	Particulate Sampling Data														Fuel Weight (lb)		Temperature Data (°F)												Stack Gas Data		
Elapsed Time (min)	Gas Meter 1 (ft^3)	Gas Meter 2 (ft^3)	Sample Rate 1 (cfm)	Sample Rate 2 (cfm)	Orifice dH 1 ("H_2O)	Meter 1 Temp (°F)	Meter 1 Vacuum ("Hg)	Orifice dH 2 ("H_2O)	Meter 2 Temp (°F)	Meter 2 Vacuum ("Hg)	Dilution Tunnel (°F)	Dilution Tunnel Center dP	Pro. Rate 1	Pro. Rate 2	Scale Reading	Weight Change	Firebox Top	Firebox Bottom	Firebox Back	Firebox Left	Firebox Right	Avg. Stove Surface	Catalyst Exit	Stack	Filter 1	Dryer Exit 1	Filter 2	Dryer Exit 2	Ambient	Draft ("H_2O)	CO_2 (%)	CO (%)
111	18.052	18.001	0.16	0.16	1.33	83	1.95	1.14	83	1.1	91	0.049	100	99	1.5	0	514	287	593	407	352	431	874	282	74	72	74	70	72	-0.025	5.68	0.28
112	18.215	18.163	0.16	0.16	1.33	83	1.96	1.14	83	1.1	92	0.049	100	99	1.5	0	515	287	588	407	352	430	879	281	74	72	74	70	72	-0.025	6.71	0.31
113	18.378	18.326	0.16	0.16	1.33	83	1.95	1.14	83	1.1	91	0.049	100	100	1.4	-0.1	516	287	583	406	352	429	881	280	74	72	74	70	72	-0.024	6.53	0.34
114	18.541	18.489	0.16	0.16	1.33	83	1.95	1.14	83	1.1	91	0.049	100	100	1.4	0	519	287	579	406	352	429	879	280	74	72	74	70	72	-0.025	6.65	0.37
115	18.704	18.652	0.16	0.16	1.33	83	1.95	1.13	83	1.1	91	0.049	100	100	1.4	0	523	287	575	406	352	429	879	280	74	72	74	70	72	-0.025	6.45	0.39
116	18.867	18.814	0.16	0.16	1.34	83	1.96	1.14	83	1.1	91	0.049	100	99	1.4	0	526	287	571	406	352	428	873	279	74	72	74	70	72	-0.024	6.42	0.38
117	19.031	18.977	0.16	0.16	1.32	83	1.95	1.15	83	1.1	91	0.049	100	100	1.4	0	528	288	567	406	352	428	868	279	74	72	74	69	72	-0.024	6.48	0.39
118	19.195	19.140	0.16	0.16	1.33	83	1.95	1.14	83	1.1	91	0.049	100	100	1.4	0	526	288	563	406	352	427	865	279	74	72	74	69	72	-0.024	6.42	0.4
119	19.358	19.304	0.16	0.16	1.33	83	1.96	1.13	83	1.2	91	0.049	100	101	1.3	-0.1	525	288	559	406	352	426	861	279	74	72	74	69	72	-0.024	6.39	0.41
120	19.521	19.466	0.16	0.16	1.33	83	1.95	1.14	83	1.1	90	0.049	100	99	1.3	0	524	288	556	405	352	425	858	279	74	72	74	69	72	-0.023	6.43	0.41
121	19.684	19.628	0.16	0.16	1.33	83	1.96	1.14	83	1.1	91	0.049	100	99	1.3	0	524	287	552	405	352	424	856	278	74	72	74	69	72	-0.023	6.35	0.42
122	19.848	19.791	0.16	0.16	1.33	83	1.95	1.14	84	1.1	91	0.049	100	100	1.3	0	522	288	549	405	352	423	854	278	74	72	74	69	72	-0.023	6.29	0.42
123	20.011	19.954	0.16	0.16	1.33	83	1.95	1.14	84	1.1	91	0.049	100	100	1.3	0	520	287	546	404	352	422	852	279	74	72	74	69	72	-0.024	6.37	0.44
124	20.174	20.117	0.16	0.16	1.33	83	1.95	1.14	83	1.1	90	0.049	100	100	1.2	-0.1	518	287	543	404	352	421	848	278	74	72	74	69	72	-0.023	6.17	0.43
125	20.338	20.280	0.16	0.16	1.34	83	1.95	1.13	84	1.1	91	0.049	100	100	1.2	0	519	287	540	404	352	420	846	278	74	72	74	69	72	-0.024	6.19	0.45
126	20.502	20.442	0.16	0.16	1.33	83	1.95	1.14	84	1.1	91	0.049	100	99	1.2	0	518	287	537	404	352	420	840	277	74	72	74	69	72	-0.023	6.25	0.42
127	20.665	20.605	0.16	0.16	1.33	83	1.95	1.14	83	1.1	90	0.049	100	100	1.2	0	517	287	534	404	352	419	838	277	74	72	74	69	72	-0.023	6.21	0.43
128	20.828	20.768	0.16	0.16	1.33	83	1.95	1.14	83	1.1	90	0.049	100	100	1.2	0	513	287	532	403	352	417	836	276	74	72	74	69	72	-0.023	6.19	0.44
129	20.991	20.931	0.16	0.16	1.32	83	1.96	1.14	83	1.1	90	0.049	100	100	1.2	0	513	287	529	403	352	417	833	276	74	72	74	69	72	-0.023	6.24	0.43
130	21.155	21.093	0.16	0.16	1.33	83	1.96	1.13	83	1.2	90	0.049	100	99	1.1	-0.1	511	287	526	403	352	416	832	276	74	72	74	69	72	-0.023	6.29	0.43
131	21.318	21.256	0.16	0.16	1.34	83	1.95	1.13	83	1.1	90	0.049	100	100	1.1	0	510	286	524	402	352	415	832	275	74	72	74	69	72	-0.023	6.21	0.45
132	21.481	21.419	0.16	0.16	1.34	83	1.95	1.14	84	1.1	90	0.049	100	100	1.1	0	512	286	522	402	352	415	830	275	74	72	74	69	72	-0.024	6.17	0.47
133	21.644	21.582	0.16	0.16	1.33	83	1.96	1.14	84	1.1	91	0.049	100	100	1.1	0	509	286	520	402	352	414	828	275	74	72	74	69	72	-0.023	6.03	0.47
134	21.808	21.745	0.16	0.16	1.34	83	1.96	1.14	84	1.1	90	0.049	100	100	1.1	0	507	286	517	401	352	413	824	275	74	71	74	69	72	-0.023	6.05	0.47
135	21.972	21.907	0.16	0.16	1.34	83	1.95	1.14	83	1.1	90	0.049	100	99	1.0	-0.1	505	286	515	401	352	412	814	274	74	71	74	69	72	-0.022	6.05	0.41
136	22.136	22.070	0.16	0.16	1.33	83	1.96	1.14	84	1.1	90	0.049	100	100	1.0	0	504	286	513	401	351	411	808	273	74	71	74	69	72	-0.023	5.95	0.42
137	22.299	22.233	0.16	0.16	1.33	83	1.95	1.14	84	1.1	90	0.049	100	100	1.0	0	501	286	511	401	352	410	806	272	74	71	74	69	72	-0.022	5.8	0.43
138	22.462	22.397	0.16	0.16	1.33	83	1.96	1.14	84	1.1	90	0.049	100	100	1.0	0	501	285	509	400	351	409	803	272	74	71	74	69	72	-0.023	5.78	0.44
139	22.625	22.559	0.16	0.16	1.33	83	1.95	1.14	84	1.1	90	0.049	100	99	1.0	0	499	285	507	399	351	408	800	272	74	71	74	69	72	-0.022	5.79	0.46
140	22.788	22.722	0.16	0.16	1.33	83	1.96	1.14	84	1.1	90	0.049	100	100	1.0	0	498	285	504	399	351	407	798	272	74	71	74	69	72	-0.022	5.71	0.47
141	22.952	22.884	0.16	0.16	1.33	83	1.95	1.14	84	1.1	90	0.049	100	99	1.0	0	497	285	502	398	351	407	796	271	74	71	74	69	72	-0.022	5.62	0.46
142	23.115	23.047	0.16	0.16	1.34	83	1.95	1.14	84	1.1	90	0.049	100	100	0.9	-0.1	495	285	500	398	350	406	794	272	74	71	74	69	72	-0.022	5.61	0.48
143	23.280	23.211	0.17	0.16	1.33	83	1.96	1.14	84	1.1	90	0.049	101	100	0.9	0	494	285	498	397	350	405	787	272	74	71	74	69	72	-0.022	5.4	0.47
144	23.443	23.374	0.16	0.16	1.33	83	1.95	1.13	84	1.1	90	0.049	100	100	0.9	0	493	285	496	396	350	404	781	271	74	71	74	69	72	-0.022	5.29	0.47
145	23.606	23.536	0.16	0.16	1.33	83	1.95	1.14	84	1.1	90	0.049	100	99	0.9	0	490	285	494	396	350	403	777	270	74	71	74	69	72	-0.022	5.21	0.47
146	23.770	23.699	0.16	0.16	1.33	83	1.96	1.14	84	1.1	90	0.049	100	100	0.9	0	490	285	491	395	349	402	773	268	74	71	74	69	72	-0.021	5.02	0.48
147	23.933	23.862	0.16	0.16	1.33	83	1.96	1.14	84	1.1	89	0.049	99	100	0.9	0	488	285	489	394	349	401	770	268	74	71	74	69	72	-0.021	4.96	0.48

Wood Heater Test Data - ASTM E2780 / ASTM E2515

Run: 1

Manufacturer: Hearth & Home
Model: Intrepiod IV Catalytic
Tracking No.: 2264
Project No.: 0135WS038E
Test Date: 03-Jan-18
Beginning Clock Time: 10:43

Total Sampling Time: 195 min
Recording Interval: 1 min
Background Sample Volume: _____ cubic feet

Meter Box Y Factor: 0.981 (1) 0.984 (2) _____ (Amb)

Barometric Pressure:	Begin	Middle	End	Average
	30.19	30.16	30.14	30.16 "Hg

OMNI Equipment Numbers: _____

PM Control Modules: 0035, 0036
Dilution Tunnel MW(dry): 29.00 lb/lb-mole
Dilution Tunnel MW(wet): 28.78 lb/lb-mole
Dilution Tunnel H2O: 2.00 percent
Dilution Tunnel Static: -0.180 "H2O
Tunnel Area: 0.19635 ft2
Pitot Tube Cp: 0.99

Avg. Tunnel Velocity: 13.15 ft/sec.
Initial Tunnel Flow: 143.8 scfm
Average Tunnel Flow: 146.4 scfm
Post-Test Leak Check (1): 0.000 cfm @ 6 in. Hg
Post-Test Leak Check (2): 0.000 cfm @ 7 in. Hg
Average Test Piece Fuel Moisture: 20.21 Dry Basis %

Technician Signature: _____

Velocity Traverse Data	Pt.1	Pt.2	Pt.3	Pt.4	Pt.5	Pt.6	Pt.7	Pt.8	Center	
Initial dP	0.026	0.046	0.038	0.030	0.030	0.048	0.050	0.030	0.049	"H2O
Temp:	96	93	93	93	92	92	92	92	93	°F

V_{strav} 13.16 ft/sec V_{scent} 14.95 ft/sec F_p 0.880

	Particulate Sampling Data														Fuel Weight (lb)		Temperature Data (°F)												Stack Gas Data		
Elapsed Time (min)	Gas Meter 1 (ft^3)	Gas Meter 2 (ft^3)	Sample Rate 1 (cfm)	Sample Rate 2 (cfm)	Orifice dH 1 ("H_2O)	Meter 1 Temp (°F)	Meter 1 Vacuum ("Hg)	Orifice dH 2 ("H_2O)	Meter 2 Temp (°F)	Meter 2 Vacuum ("Hg)	Dilution Tunnel (°F)	Dilution Tunnel Center dP	Pro. Rate 1	Pro. Rate 2	Scale Reading	Weight Change	Firebox Top	Firebox Bottom	Firebox Back	Firebox Left	Firebox Right	Avg. Stove Surface	Catalyst Exit	Stack	Filter 1	Dryer Exit 1	Filter 2	Dryer Exit 2	Ambient	Draft ("H_2O)	CO_2 (%)	CO (%)
148	24.096	24.025	0.16	0.16	1.33	83	1.95	1.14	84	1.1	90	0.049	100	100	0.9	0	487	285	487	393	349	400	767	266	74	71	74	69	72	-0.022	4.8	0.49
149	24.259	24.187	0.16	0.16	1.33	83	1.95	1.13	84	1.1	90	0.049	100	99	0.8	-0.1	485	284	485	392	348	399	765	266	74	71	74	69	72	-0.021	4.82	0.49
150	24.423	24.350	0.16	0.16	1.33	83	1.95	1.14	84	1.1	90	0.049	100	100	0.8	0	484	284	483	391	348	398	761	265	74	71	74	69	72	-0.022	4.79	0.52
151	24.587	24.513	0.16	0.16	1.33	83	1.96	1.14	84	1.1	90	0.049	100	100	0.8	0	481	284	480	390	347	396	761	264	74	71	74	69	72	-0.021	4.85	0.51
152	24.751	24.676	0.16	0.16	1.33	83	1.96	1.13	84	1.1	90	0.049	100	100	0.8	0	480	284	478	389	347	396	758	263	74	71	74	69	72	-0.021	4.84	0.51
153	24.914	24.839	0.16	0.16	1.32	83	1.96	1.14	84	1.1	90	0.049	100	100	0.8	0	478	284	476	388	346	394	755	263	74	71	74	69	72	-0.021	4.82	0.53
154	25.078	25.001	0.16	0.16	1.32	83	1.96	1.14	84	1.1	89	0.049	100	99	0.8	0	475	284	474	387	346	393	748	262	74	71	74	69	72	-0.020	6.11	0.39
155	25.241	25.164	0.16	0.16	1.33	83	1.95	1.14	84	1.2	89	0.049	99	100	0.8	0	474	284	472	386	345	392	741	261	74	71	74	69	73	-0.020	6.11	0.35
156	25.404	25.327	0.16	0.16	1.33	83	1.96	1.14	84	1.1	89	0.049	99	100	0.7	-0.1	474	283	470	385	344	391	738	260	74	71	74	69	73	-0.019	6.09	0.34
157	25.567	25.491	0.16	0.16	1.33	83	1.95	1.14	84	1.1	89	0.049	99	100	0.7	0	473	283	468	384	344	390	735	260	74	71	74	69	73	-0.020	5.98	0.34
158	25.731	25.653	0.16	0.16	1.34	83	1.95	1.13	84	1.1	89	0.049	100	99	0.7	0	473	283	467	383	343	390	735	258	74	71	74	69	72	-0.020	5.91	0.34
159	25.894	25.816	0.16	0.16	1.33	83	1.95	1.14	84	1.2	89	0.049	99	100	0.7	0	474	283	465	382	343	389	734	257	74	71	74	69	73	-0.020	5.85	0.35
160	26.058	25.978	0.16	0.16	1.33	83	1.96	1.14	84	1.1	89	0.049	100	99	0.7	0	475	283	464	382	342	389	734	258	74	71	74	69	73	-0.020	5.72	0.36
161	26.222	26.141	0.16	0.16	1.33	83	1.96	1.14	84	1.1	89	0.049	100	100	0.6	-0.1	475	283	463	381	342	389	733	259	74	71	74	69	73	-0.020	5.69	0.36
162	26.385	26.305	0.16	0.16	1.33	83	1.96	1.14	84	1.1	89	0.049	99	100	0.6	0	475	283	461	380	341	388	733	258	74	71	74	68	73	-0.020	5.64	0.37
163	26.549	26.468	0.16	0.16	1.33	83	1.95	1.13	84	1.1	89	0.049	100	100	0.6	0	476	283	460	379	340	388	733	256	74	71	74	68	73	-0.020	5.62	0.38
164	26.712	26.630	0.16	0.16	1.32	83	1.95	1.14	84	1.2	89	0.049	99	99	0.6	0	476	283	459	379	340	387	733	258	74	71	74	68	73	-0.019	5.58	0.38
165	26.875	26.793	0.16	0.16	1.33	83	1.95	1.14	84	1.2	89	0.049	99	100	0.6	0	475	282	458	378	340	387	733	258	74	71	74	68	73	-0.020	5.58	0.39
166	27.038	26.956	0.16	0.16	1.33	83	1.95	1.14	84	1.1	89	0.049	99	100	0.6	0	474	282	457	378	339	386	731	257	74	71	74	68	73	-0.019	5.26	0.41
167	27.202	27.119	0.16	0.16	1.33	83	1.96	1.14	84	1.1	89	0.049	100	100	0.5	-0.1	473	282	456	377	339	385	728	256	74	71	74	68	73	-0.020	5.16	0.41
168	27.365	27.281	0.16	0.16	1.33	83	1.96	1.14	84	1.1	89	0.049	99	99	0.5	0	473	282	455	376	338	385	726	256	74	71	74	68	73	-0.019	5.1	0.42
169	27.529	27.444	0.16	0.16	1.33	83	1.95	1.14	84	1.1	89	0.049	100	100	0.5	0	471	282	453	376	337	384	726	256	74	71	74	68	73	-0.020	5.01	0.42
170	27.693	27.607	0.16	0.16	1.32	84	1.96	1.14	84	1.1	89	0.049	100	100	0.5	0	470	282	453	375	337	383	724	257	74	71	74	68	73	-0.019	5	0.43
171	27.856	27.770	0.16	0.16	1.34	84	1.96	1.14	84	1.1	89	0.049	99	100	0.5	0	468	282	451	374	336	382	722	256	74	71	74	68	73	-0.020	4.98	0.45
172	28.020	27.933	0.16	0.16	1.33	84	1.96	1.14	84	1.2	89	0.049	100	100	0.5	0	468	283	450	374	336	382	721	257	74	71	74	68	73	-0.020	4.95	0.46
173	28.183	28.095	0.16	0.16	1.33	83	1.96	1.13	84	1.1	89	0.049	99	99	0.5	0	465	282	449	373	335	381	720	255	74	71	74	68	73	-0.019	4.83	0.46
174	28.346	28.258	0.16	0.16	1.32	84	1.96	1.14	84	1.2	89	0.049	99	100	0.5	0	464	282	447	372	334	380	718	255	74	71	74	68	73	-0.019	4.8	0.47
175	28.509	28.421	0.16	0.16	1.33	84	1.96	1.14	84	1.1	89	0.049	99	100	0.4	-0.1	463	283	446	371	334	379	717	255	74	71	74	68	73	-0.019	4.79	0.48
176	28.673	28.584	0.16	0.16	1.33	84	1.95	1.14	84	1.2	89	0.049	100	100	0.4	0	461	283	445	371	333	379	717	255	74	71	74	68	73	-0.019	4.8	0.49
177	28.836	28.747	0.16	0.16	1.33	84	1.95	1.13	84	1.2	89	0.049	99	100	0.4	0	462	283	444	370	333	378	706	253	74	71	74	68	73	-0.018	6.41	0.33
178	29.000	28.909	0.16	0.16	1.34	84	1.95	1.14	84	1.1	89	0.049	100	99	0.4	0	463	282	443	369	332	378	702	251	74	71	74	68	73	-0.019	6.3	0.32
179	29.164	29.072	0.16	0.16	1.33	84	1.95	1.14	84	1.1	89	0.049	100	100	0.4	0	465	282	442	369	331	378	702	252	74	71	74	68	73	-0.018	6.21	0.33
180	29.327	29.234	0.16	0.16	1.33	84	1.96	1.14	84	1.2	89	0.049	99	99	0.3	-0.1	468	282	441	368	331	378	702	252	74	71	74	68	73	-0.018	6.08	0.34
181	29.490	29.398	0.16	0.16	1.32	84	1.96	1.14	84	1.2	89	0.049	99	100	0.3	0	470	282	441	368	330	378	702	252	74	71	74	68	73	-0.018	6.03	0.35
182	29.653	29.561	0.16	0.16	1.33	84	1.95	1.13	84	1.1	89	0.049	99	100	0.3	0	473	282	440	367	330	378	704	252	75	71	74	68	73	-0.018	5.96	0.36
183	29.817	29.723	0.16	0.16	1.33	84	1.95	1.14	84	1.1	89	0.049	100	99	0.3	0	473	282	439	367	329	378	707	251	75	71	74	68	73	-0.019	6.04	0.38
184	29.980	29.886	0.16	0.16	1.33	84	1.95	1.14	84	1.1	89	0.049	99	100	0.3	0	474	282	438	366	329	378	708	253	75	71	74	68	73	-0.017	5.99	0.39

Wood Heater Test Data - ASTM E2780 / ASTM E2515

Run: 1

Manufacturer: Hearth & Home
Model: Intrepiod IV Catalytic
Tracking No.: 2264
Project No.: 0135WS038E
Test Date: 03-Jan-18
Beginning Clock Time: 10:43

Total Sampling Time: 195 min
Recording Interval: 1 min
Background Sample Volume: _____ cubic feet

Meter Box Y Factor: 0.981 (1) 0.984 (2) _____ (Amb)

Barometric Pressure:	Begin	Middle	End	Average
	30.19	30.16	30.14	30.16 "Hg

OMNI Equipment Numbers: _____

PM Control Modules: 0035, 0036
Dilution Tunnel MW(dry): 29.00 lb/lb-mole
Dilution Tunnel MW(wet): 28.78 lb/lb-mole
Dilution Tunnel H2O: 2.00 percent
Dilution Tunnel Static: -0.180 "H2O
Tunnel Area: 0.19635 ft2
Pitot Tube Cp: 0.99

Avg. Tunnel Velocity: 13.15 ft/sec.
Initial Tunnel Flow: 143.8 scfm
Average Tunnel Flow: 146.4 scfm
Post-Test Leak Check (1): 0.000 cfm @ 6 in. Hg
Post-Test Leak Check (2): 0.000 cfm @ 7 in. Hg
Average Test Piece Fuel Moisture: 20.21 Dry Basis %

Technician Signature: _____

Velocity Traverse Data	Pt.1	Pt.2	Pt.3	Pt.4	Pt.5	Pt.6	Pt.7	Pt.8	Center	
Initial dP	0.026	0.046	0.038	0.030	0.030	0.048	0.050	0.030	0.049	"H2O
Temp:	96	93	93	93	92	92	92	92	93	°F

V_{strav} 13.16 ft/sec V_{scent} 14.95 ft/sec F_p 0.880

	Particulate Sampling Data														Fuel Weight (lb)		Temperature Data (°F)													Stack Gas Data		
Elapsed Time (min)	Gas Meter 1 (ft^3)	Gas Meter 2 (ft^3)	Sample Rate 1 (cfm)	Sample Rate 2 (cfm)	Orifice dH 1 ("H_2O)	Meter 1 Temp (°F)	Meter 1 Vacuum ("Hg)	Orifice dH 2 ("H_2O)	Meter 2 Temp (°F)	Meter 2 Vacuum ("Hg)	Dilution Tunnel (°F)	Dilution Tunnel Center dP	Pro. Rate 1	Pro. Rate 2	Scale Reading	Weight Change	Firebox Top	Firebox Bottom	Firebox Back	Firebox Left	Firebox Right	Avg. Stove Surface	Catalyst Exit	Stack	Filter 1	Dryer Exit 1	Filter 2	Dryer Exit 2	Ambient	Draft ("H_2O)	CO_2 (%)	CO (%)
185	30.143	30.049	0.16	0.16	1.33	84	1.95	1.14	84	1.2	89	0.049	99	100	0.2	-0.1	473	282	438	366	328	377	709	253	75	71	74	68	73	-0.018	5.99	0.4
186	30.307	30.212	0.16	0.16	1.34	84	1.96	1.14	84	1.1	88	0.049	100	100	0.2	0	474	282	437	366	328	377	711	251	75	71	74	68	73	-0.018	5.88	0.4
187	30.471	30.374	0.16	0.16	1.32	84	1.96	1.13	84	1.1	88	0.049	100	99	0.2	0	474	282	437	366	328	377	712	251	75	71	74	68	73	-0.019	5.9	0.42
188	30.634	30.537	0.16	0.16	1.32	84	1.96	1.14	84	1.1	88	0.049	99	100	0.2	0	474	282	436	366	328	377	707	251	74	71	74	68	73	-0.019	5.85	0.39
189	30.798	30.699	0.16	0.16	1.33	84	1.95	1.14	84	1.1	87	0.049	100	99	0.2	0	473	282	436	366	328	377	706	250	75	71	74	68	73	-0.019	5.81	0.38
190	30.961	30.863	0.16	0.16	1.32	84	1.96	1.14	84	1.2	87	0.049	99	100	0.1	-0.1	473	282	435	366	327	377	705	251	74	71	74	68	73	-0.019	5.83	0.38
191	31.124	31.025	0.16	0.16	1.33	84	1.95	1.14	84	1.1	87	0.049	99	99	0.1	0	474	282	435	366	327	377	703	251	74	71	74	68	73	-0.018	5.81	0.38
192	31.287	31.188	0.16	0.16	1.33	84	1.95	1.13	84	1.1	87	0.049	99	99	0.1	0	472	282	434	365	327	376	703	251	74	71	74	68	73	-0.018	5.7	0.38
193	31.450	31.350	0.16	0.16	1.34	84	1.96	1.14	84	1.1	87	0.049	99	99	0.0	-0.1	472	282	434	365	327	376	701	252	74	71	74	68	73	-0.019	5.88	0.37
194	31.614	31.513	0.16	0.16	1.33	84	1.95	1.14	84	1.2	87	0.049	100	99	0.0	0	472	282	433	365	327	376	700	251	74	71	74	68	73	-0.019	5.8	0.36
195	31.778	31.677	0.16	0.16	1.33	84	1.95	1.14	84	1.2	87	0.049	100	100	0.0	0	472	282	432	364	327	375	698	251	74	71	74	68	73	-0.018	5.79	0.36
Avg/Tot	31.778	31.677	0.16	0.16	1.32	81		1.14	82		92	0.049	100	100								52.8				72	74	69	72	-0.027		

Wood Heater Lab Data - ASTM E2780 / ASTM E2515

Manufacturer: Hearth & Home
Model: Intrepiod IV Catalytic
Tracking No.: 2264
Project No.: 0135WS038E
Run #: 1
Date: 1/3/18

Equipment Numbers:

TRAIN 1 (First Hour emissions)

Sample Component	Reagent	Filter, Probe or Dish #	Weights		
			Final, mg	Tare, mg	Particulate, mg
B. Front filter catch	Filter	D331	111.9	111.4	0.5
C. Rear filter catch	Filter				0.0
D. Probe catch*	Probe				0.0
E. Filter seals catch*	Seals				0.0

Sub-Total Total Particulate, mg: 0.5

TRAIN 1 (Post First Hour Change-out)

Sample Component	Reagent	Filter, Probe or Dish #	Weights		
			Final, mg	Tare, mg	Particulate, mg
B. Front filter catch	Filter	D332	110.9	110.7	0.2
C. Rear filter catch	Filter	D333	110.9	111.8	-0.9
D. Probe catch*	Probe	6	115349.8	115348.8	1.0
E. Filter seals catch*	Seals	R551	4130.6	4129.1	1.5

Sub-Total Total Particulate, mg: 1.8

Train 1 Aggregate Total Particulate, mg: **2.3**

TRAIN 2

Sample Component	Reagent	Filter, Probe or Dish #	Weights		
			Final, mg	Tare, mg	Particulate, mg
A. Front filter catch	Filter	D334	112.2	111.9	0.3
B. Rear filter catch	Filter	D335	111.5	111.7	-0.2
C. Probe catch*	Probe	11	114187.5	114187.0	0.5
D. Filter seals catch*	Seals	R552	4173.9	4173.2	0.7

Total Particulate, mg: **1.3**

AMBIENT

Sample Component	Reagent	Filter # or Probe #	Weights		
			Final, mg	Tare, mg	Particulate, mg
A. Front filter catch*	Filter		0.0	0.0	0.0

Total Particulate, mg: **0.0**

*Particulate catch that results in a negative number, is assumed to be zero for probes and seals, negative numbers for filters are assumed to be part of the seal weight.

Component	Equations:
A. Front filter catch	Final (mg) - Tare (mg) = Particulate, mg
B. Rear filter catch	Final (mg) - Tare (mg) = Particulate, mg
C. Probe catch	Final (mg) - Tare (mg) = Particulate, mg

Technician Signature:

Wood Heater Test Results - ASTM E2780 / ASTM E2515

Manufacturer: Hearth & Home
Model: Intrepid IV Catalytic
Project No.: 0135WS038E
Tracking No.: 2264
Run: 1
Test Date: 01/03/18

Burn Rate	**1.00 kg/hr dry**
Average Tunnel Temperature	92 degrees Fahrenheit
Average Gas Velocity in Dilution Tunnel - vs	13.15 feet/second
Average Gas Flow Rate in Dilution Tunnel - Qsd	8786.4 dscf/hour
Average Delta p	0.049 inches H20
Total Time of Test	195 minutes

	AMBIENT	SAMPLE TRAIN 1	SAMPLE TRAIN 2	FIRST HOUR FILTER (TRAIN 1)
Total Sample Volume - Vm	0.000 cubic feet	31.778 cubic feet	31.677 cubic feet	9.714 cubic feet
Average Gas Meter Temperature	72 degrees Fahrenheit	81 degrees Fahrenheit	82 degrees Fahrenheit	78 degrees Fahrenheit
Total Sample Volume (Standard Conditions) - Vmstd	0.000 dscf	30.744 dscf	30.704 dscf	9.462 dscf
Total Particulates - m_n	0 mg	2.3 mg	1.3 mg	0.5 mg
Particulate Concentration (dry-standard) - C_r/C_s	0.000000 grams/dscf	0.00007 grams/dscf	0.00004 grams/dscf	0.00005 grams/dscf
Total Particulate Emissions - E_T	0.00 grams	2.14 grams	1.21 grams	0.46 grams
Particulate Emission Rate	0.00 grams/hour	0.66 grams/hour	0.37 grams/hour	0.46 grams/hour
Emissions Factor		0.65 g/kg	0.37 g/kg	0.25 g/kg
Difference from Average Total Particulate Emissions		0.46 grams	0.46 grams	
	Dual Train Comparison Results Are Acceptable			

FINAL AVERAGE RESULTS

Complete Test Run	
Total Particulate Emissions - E_T	1.67 grams
Particulate Emission Rate	**0.51 grams/hour**
Emissions Factor	0.51 grams/kg
First Hour Emissions	
Total Particulate Emissions - E_T	0.46 grams
Particulate Emission Rate	0.46 grams/hour
Emissions Factor	0.25 grams/kg
7.5% of Average Total Particulate Emissions	0.13 grams

QUALITY CHECKS

Filter Temps < 90 °F	OK
Filter Face Velocity (47 mm)	OK
Dryer Exit Temp < 80F	OK
Leakage Rate	OK
Ambient Temp (55-90°F)	OK
Negative Probe Weight Eval.	OK
Pro-Rate Variation	OK
Stove Surface ΔT	OK
Train Precesion 7.5%	27.72
Train Precision 0.5g/kg	0.28

Technician Signature: _____

Wood Heater Lab Data - ASTM E2780 / ASTM E2515

Manufacturer:	Hearth & Home	Equipment Numbers:	
Model:	Intrepiod IV Catalytic		
Tracking No.:	2264		
Project No.:	0135WS038E		
Run #:	1		
Date:	1/3/18		

Uncorrected

TRAIN 1 (First Hour emissions)

Sample Component	Reagent	Filter, Probe or Dish #	Weights		
			Final, mg	Tare, mg	Particulate, mg
B. Front filter catch	Filter	D331	111.9	111.4	0.5
C. Rear filter catch	Filter				0.0
D. Probe catch*	Probe				0.0
E. Filter seals catch*	Seals				0.0

Sub-Total	Total Particulate, mg:	0.5

TRAIN 1 (Post First Hour Change-out)

Sample Component	Reagent	Filter, Probe or Dish #	Weights		
			Final, mg	Tare, mg	Particulate, mg
B. Front filter catch	Filter	D332	110.9	110.7	0.2
C. Rear filter catch	Filter	D333	111.8	111.8	0.0
D. Probe catch*	Probe	6	115349.8	115348.8	1.0
E. Filter seals catch*	Seals	R551	4130.6	4129.1	1.5

Sub-Total	Total Particulate, mg:	2.7
Train 1 Aggregate	Total Particulate, mg:	**3.2**

TRAIN 2

Sample Component	Reagent	Filter, Probe or Dish #	Weights		
			Final, mg	Tare, mg	Particulate, mg
A. Front filter catch	Filter	D334	112.2	111.9	0.3
B. Rear filter catch	Filter	D335	111.7	111.7	0.0
C. Probe catch*	Probe	11	114187.5	114187.0	0.5
D. Filter seals catch*	Seals	R552	4173.9	4173.2	0.7

	Total Particulate, mg:	**1.5**

AMBIENT

Sample Component	Reagent	Filter # or Probe #	Weights		
			Final, mg	Tare, mg	Particulate, mg
A. Front filter catch*	Filter		0.0	0.0	0.0

	Total Particulate, mg:	**0.0**

*Particulate catch that results in a negative number, is assumed to be zero for probes and seals, negative numbers for filters are assumed to be part of the seal weight.

Component	Equations:
A. Front filter catch	Final (mg) - Tare (mg) = Particulate, mg
B. Rear filter catch	Final (mg) - Tare (mg) = Particulate, mg
C. Probe catch	Final (mg) - Tare (mg) = Particulate, mg

Technician Signature: 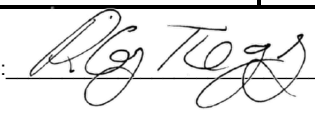

Wood Heater Test Results - ASTM E2780 / ASTM E2515

Manufacturer: Hearth & Home
Model: Intrepiod IV Catalytic
Project No.: 0135WS038E
Tracking No.: 2264
Run: 1
Test Date: 01/03/18

Burn Rate	**1.00 kg/hr dry**
Average Tunnel Temperature	92 degrees Fahrenheit
Average Gas Velocity in Dilution Tunnel - vs	13.15 feet/second
Average Gas Flow Rate in Dilution Tunnel - Qsd	8786.4 dscf/hour
Average Delta p	0.049 inches H20
Total Time of Test	195 minutes

Uncorrected

	AMBIENT	SAMPLE TRAIN 1	SAMPLE TRAIN 2	FIRST HOUR FILTER (TRAIN 1)
Total Sample Volume - Vm	0.000 cubic feet	31.778 cubic feet	31.677 cubic feet	9.714 cubic feet
Average Gas Meter Temperature	72 degrees Fahrenheit	81 degrees Fahrenheit	82 degrees Fahrenheit	78 degrees Fahrenheit
Total Sample Volume (Standard Conditions) - Vmstd	0.000 dscf	30.744 dscf	30.704 dscf	9.462 dscf
Total Particulates - m_n	0 mg	3.2 mg	1.5 mg	0.5 mg
Particulate Concentration (dry-standard) - C_r/C_s	0.000000 grams/dscf	0.00010 grams/dscf	0.00005 grams/dscf	0.00005 grams/dscf
Total Particulate Emissions - E_T	0.00 grams	2.97 grams	1.40 grams	0.46 grams
Particulate Emission Rate	0.00 grams/hour	0.91 grams/hour	0.43 grams/hour	0.46 grams/hour
Emissions Factor		0.91 g/kg	0.43 g/kg	0.25 g/kg
Difference from Average Total Particulate Emissions		0.79 grams	0.79 grams	
	Dual Train Comparison Results Are Acceptable			

FINAL AVERAGE RESULTS

Complete Test Run	
Total Particulate Emissions - E_T	2.18 grams
Particulate Emission Rate	**0.67 grams/hour**
Emissions Factor	0.67 grams/kg
First Hour Emissions	
Total Particulate Emissions - E_T	0.46 grams
Particulate Emission Rate	0.46 grams/hour
Emissions Factor	0.25 grams/kg
7.5% of Average Total Particulate Emissions	0.16 grams

QUALITY CHECKS

Filter Temps < 90 °F	OK
Filter Face Velocity (47 mm)	OK
Dryer Exit Temp < 80F	OK
Leakage Rate	OK
Ambient Temp (55-90°F)	OK
Negative Probe Weight Eval.	OK
Pro-Rate Variation	OK
Stove Surface ΔT	OK
Train Precesion 7.5%	36.11
Train Precision 0.5g/kg	0.48

Technician Signature: _____

Wood Heater Efficiency Results - CSA B415.1

Manufacturer: Hearth & Home
Model: :repiod IV Catalytic
Date: 01/03/18
Run: 1
Control #: 0135WS038E
Test Duration: 195
Output Category: II

Technician Signature: 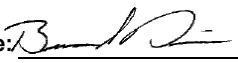

Test Results in Accordance with CSA B415.1-09

	HHV Basis	LHV Basis
Overall Efficiency	78.4%	84.7%
Combustion Efficiency	98.1%	98.1%
Heat Transfer Efficiency	80%	86.4%

Output Rate (kJ/h)	15,332	14,544	**(Btu/h)**
Burn Rate (kg/h)	0.99	2.18	**(lb/h)**
Input (kJ/h)	19,556	18,551	**(Btu/h)**

Test Load Weight (dry kg)	3.21	7.07	**dry lb**
MC wet (%)	16.80993844		
MC dry (%)	20.21		
Particulate (g)	0.51		
CO (g)	97		
Test Duration (h)	3.25		

Emissions	Particulate	CO
g/MJ Output	0.01	1.95
g/kg Dry Fuel	0.16	30.36
g/h	0.16	29.97
lb/MM Btu Output	0.02	4.54

Air/Fuel Ratio (A/F)	13.31

VERSION: **2.2** **12/14/2009**

OMNI-Test Laboratories, Inc. **ASTM E2780 Wood Heater Run Sheets**

Client: Hearth & Home Project Number: 0135WS038E Run Number: 1

Model: Intrepid IV Catalytic Tracking Number: 2264 Date: 1/3/18

Test Crew: B Davis

OMNI Equipment ID numbers:

ASTM E2515 Lab Sheet

Assembled By:

1/3/18 1610 B Davis

Date/Time in Dessicator:

1/3/18 1610

	Weighing #1	Weighing #2	Weighing #3	Weighing #4	Weighing #5
Date/Time:	1/4/18 0830	1/9/18 0840	1/10/18 0840		
R/H %:	5.2	8.9	6.7		
Temp:	72.4	71.2	68.9		
200 mg Audit:	0.2000	0.2000			
2 g Audit:	1.9998	2.0000			
100 g Audit:	99.9978	99.9970			
Initials:	BL	BL			

Train	Element	ID #	Tare (mg)	Weight (mg)	Weight (mg)	Weight (mg)	Weight (mg)	Weight (mg)
A (First Hour)	Front Filter	D331	111.4	112.0	111.9	✓		
	Rear Filter							
	Probe							
	O-Ring Set							
A (Remainder)	Front Filter	D332	110.7	110.9	110.9	✓		
	Rear Filter	D333	111.8	110.8	110.9	✓		
	Probe	6	115348.8	115349.6	115349.8	✓		
	O-Ring Set	RS51	4129.1	4130.6	4130.6	✓		
B	Front Filter	D334	111.9	112.2	112.2	✓		
	Rear Filter	D335	111.7	111.5	111.5	✓		
	Probe	11	114187.0	114187.6	114187.5	✓		
	O-Ring Set	RS52	4173.2	4173.8	4173.9	✓		
BG	Filter							

Technician Signature: B Davis Date: 1/23/18

OMNI-Test Laboratories, Inc. **ASTM E2780 Wood Heater Run Sheets**

Client: Hearth & Home Project Number: 0135WS038E Run Number: 1

Model: Intrepid IV Catalytic Tracking Number: 2264 Date: 1/3/18

Test Crew: BD AG JS

OMNI Equipment ID numbers:

Wood Heater Supplemental Data

Start Time: 11:43 Booth #: E1

Stop Time: 14:57

Stack Gas Leak Check:

Initial: good Final: good

Sample Train Leak Check:

A: 0.0 @ 6 "Hg

B: 0.0 @ 7 "Hg

Calibrations: Span Gas CO_2: 16.74 CO: 4.20/901

	Pre Test		Post Test	
	Zero	Span	Zero	Span
Time	11:26	11:26	1511	1511
CO_2	0.00	16.74	0.00	16.69
CO	0.000/0	4.201/898	0.000/-1	4.19/890

Air Velocity (ft/min): Initial: <50 Final: <50

Scale Audit (lbs): Initial: 10.0 Final: 10.0

Pitot Tube Leak Test: Initial: good Final: good

Stack Diameter (in): 6"

Induced Draft: 0.0

% Smoke Capture: 100 %

Flue Pipe Cleaned Prior to First Test in Series:

Date: 1/3/18 Initials: BA

	Initial	Middle	Ending
P_b (in/Hg)	30.19	30.16	30.14
RH (%)	14.4	13.9	17.1
Ambient (°F)	72	72	73

Tunnel Traverse

Microtector Reading	dP (in H_2O)	T(°F)
1	.026	96
2	.046	93
3	.038	93
4	.030	93
1	.030	92
2	.048	92
3	.050	92
4	.030	92
Center:		
	.048/.050	93

Tunnel Static Pressure (in H_2O):	
Beginning of Test	End of Test
-.18	-.18

Background Filter Volume: N/A

Technician Signature: Date: 1/23/18

OMNI-Test Laboratories, Inc. **ASTM E2780 Wood Heater Run Sheets**

Client: Hearth & Home Project Number: 0135WS038E Run Number: 1

Model: Intrepid IV Catalytic Tracking Number: 2264 Date: 1/3/18

Test Crew: D Davis

OMNI Equipment ID numbers: 431, 340

Wood Heater Fuel Data

Fuel: Douglas fir, untreated and air dried, standard grade or better dimensional lumber

Pre-Burn Fuel

Calibration: Cal Value (1) = 12% Actual Reading 12
Cal Value (2) = 22% Actual Reading 22

Piece:	Length:	Reading:	Piece:	Length:	Reading:
1	36 in	23.5	7	____ in	____
2	36 in	19.1	8	____ in	____
	36 ft	20.8	____	____	____
3	36 in	23.7	9	____ in	____
4	____ in	____	10	____ in	____
5	____ in	____	11	____ in	____
6	____ in	____	12	____ in	____

Total Pre-Burn Fuel Weight: 13.7 Pre-Burn Fuel Average Moisture: 21.70

Time (clock): 0825 Room Temperature (F): 70 Initials: BL

Test Fuel

Firebox Volume (ft³): 1.31 Test Fuel Piece Length (in): 13.5

Load Weight Range (lb): 8.25 - 9.17 - 10.08 Total Wet Fuel Load Weight (lb): 8.5

Fuel Type & Amount: 2 x 4: 5 4 x 4: 0

Weight (with spacers): 8.5 Weight (with spacers): 0

Piece:	Weight (lbs):	Moisture Readings (%DB):			Fuel Type:
1	1.3	21.3	20.6	19.7	2x4
2	1.3	22.5	21.3	20.0	2x4
3	1.2	19.9	19.7	19.0	2x4
4	1.2	18.9	19.3	19.2	2x4
5	1.4	20.8	19.5	21.4	2x4
6	____	____	____	____	____
7	____	____	____	____	____

Spacer Moisture Readings (%DB)

10.0	14.9	14.9	11.2	8.0	____	____	____
10.5	14.8	15.2	8.0	7.8	____	____	____
11.3	10.8	13.0	15.2	____	____	____	____
11.4	7.5	14.8	15.6	____	____	____	____

Technician Signature: Time (clock): 10:05 Room Temperature (F): 70 Date: Initials: 1/3/18

1/23/18

OMNI-Test Laboratories, Inc. **ASTM E2780 Wood Heater Run Sheets**

Client: Hearth & Home Project Number: 0135WS038E Run Number: 1

Model: Intrepid IV Catalytic Tracking Number: 2264 Date: 1/3/18

Test Crew: D Davis

OMNI Equipment ID numbers:

Wood Heater Run Notes

Air Control Settings

Primary:

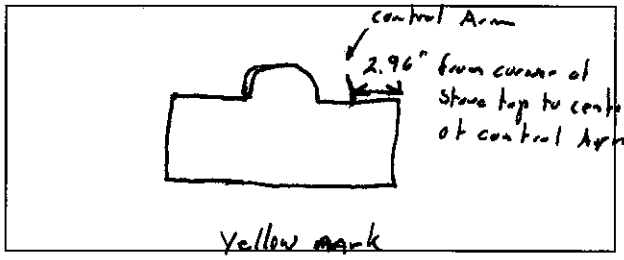

Secondary: fixed

Tertiary/Pilot: N/A

Fan: N/A

Preburn Notes

Time	Notes
10	Raked coals
30	Raked coals
50	Raked coals
70	Raked coals
90	Raked coals
96	Leveled coal bed

Test Notes

Sketch test fuel configuration:

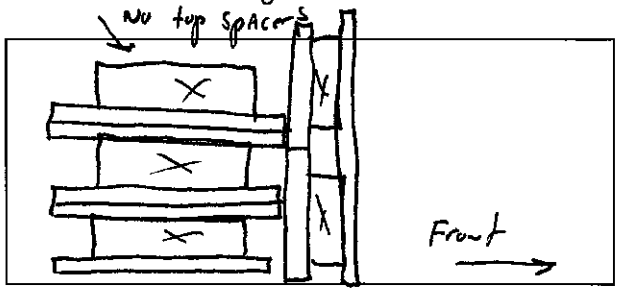

Start up procedures & Timeline:

Bypass: closed by 1:00 min
Fuel loaded by: by 55 seconds
Door closed at: 1:00 min
Primary air: At least setting entire test.

Notes: N/A

Time	Notes
60	changed front filter in train A.

Technician Signature: [signature] Date: 1/23/18

Run 2

Wood Heater Preburn Data - ASTM E2780

Run: 2

Technician Signature:

Manufacturer:	Hearth & Home
Model:	Intrepiod IV Catalytic
Tracking No.:	2264
Project No.:	0135WS038E
Test Date:	1/4/18
Beginning Clock Time:	9:48

Preburn Fuel Data

Fuel Piece Lengths (in.):	6
Total Preburn Weight (lb):	13.4
Fuel Moisture Readings (% DB):	23.8
	22.2
	22.3
	22.2
Avg Preburn Moisture (% DB):	**22.63**

Coal Bed Range (lb):	**1.7** (min)	**2.1** (max)

			Temperatures (°F)							
Elapsed Time (min)	Scale (lb)	Stack Draft (in H_2O)	FB Top	FB Bottom	FB Back	FB Left	FB Right	Avg. FB	Stack	Ambient
0	10	-0.071	312	147	375	202	198	246.8	766	70
1	9.9	-0.061	325	152	401	204	206	257.6	537	70
2	9.8	-0.053	330	156	422	206	213	265.4	438	70
3	9.8	-0.049	332	161	439	208	220	272	383	71
4	9.7	-0.045	332	165	451	211	227	277.2	350	70
5	9.6	-0.044	331	170	460	213	233	281.4	330	70
6	9.6	-0.041	330	174	466	216	238	284.8	314	70
7	9.5	-0.04	329	178	470	217	243	287.4	302	70
8	9.5	-0.038	327	183	472	219	247	289.6	293	71
9	9.4	-0.036	326	187	474	221	251	291.8	286	71
10	9.4	-0.035	324	191	474	223	254	293.2	282	71
11	9.3	-0.032	319	195	472	224	256	293.2	289	71
12	9.3	-0.033	318	198	471	226	258	294.2	277	70
13	9.2	-0.033	317	202	472	227	260	295.6	272	70
14	9.2	-0.033	317	206	472	228	262	297	270	70
15	9.1	-0.032	316	209	473	228	263	297.8	269	70
16	9	-0.033	315	212	475	230	264	299.2	268	71
17	9	-0.032	313	215	475	230	265	299.6	268	70
18	8.9	-0.032	312	218	476	231	265	300.4	269	71
19	8.8	-0.03	312	221	477	231	266	301.4	268	71
20	8.8	-0.031	311	224	477	231	267	302	266	70
21	8.7	-0.03	311	226	477	232	267	302.6	264	70
22	8.7	-0.029	310	228	477	232	268	303	263	70
23	10.6	-0.085	308	231	477	232	268	303.2	371	71
24	8.5	-0.031	314	233	477	232	271	305.4	308	70
25	8.4	-0.03	315	235	478	232	272	306.4	283	71
26	8.4	-0.03	315	237	479	232	273	307.2	273	71
27	8.3	-0.03	314	239	480	232	274	307.8	268	71
28	8.3	-0.028	314	241	481	233	275	308.8	264	70
29	8.2	-0.028	313	243	481	232	276	309	262	70
30	8.2	-0.027	313	245	482	232	277	309.8	260	70
31	8.6	-0.058	316	246	479	232	278	310.2	279	70
32	7.9	-0.037	318	248	476	232	279	310.6	484	71
33	7.8	-0.035	318	250	482	232	279	312.2	347	71
34	7.7	-0.033	316	252	492	232	280	314.4	307	71
35	7.6	-0.033	314	253	504	232	281	316.8	292	71
36	7.5	-0.032	312	254	515	232	281	318.8	286	71
37	7.5	-0.031	311	256	529	232	282	322	281	71
38	7.4	-0.032	309	257	542	232	282	324.4	280	71

Wood Heater Preburn Data - ASTM E2780

Run:	**2**

Technician Signature:

Manufacturer:	Hearth & Home
Model:	Intrepiod IV Catalytic
Tracking No.:	2264
Project No.:	0135WS038E
Test Date:	1/4/18
Beginning Clock Time:	9:48

Preburn Fuel Data

Fuel Piece Lengths (in.):	6
Total Preburn Weight (lb):	13.4
Fuel Moisture Readings (% DB):	23.8
	22.2
	22.3
	22.2
Avg Preburn Moisture (% DB):	**22.63**

Coal Bed Range (lb):	**1.7** (min)	**2.1** (max)

			Temperatures (°F)							
Elapsed Time (min)	Scale (lb)	Stack Draft (in H_2O)	FB Top	FB Bottom	FB Back	FB Left	FB Right	Avg. FB	Stack	Ambient
39	7.3	-0.032	309	258	556	232	283	327.6	281	71
40	7.2	-0.032	308	259	572	232	283	330.8	283	71
41	7.1	-0.033	308	260	587	232	284	334.2	284	71
42	7	-0.033	309	261	601	232	284	337.4	285	71
43	6.9	-0.033	309	262	616	233	284	340.8	286	71
44	6.9	-0.033	310	263	629	233	284	343.8	287	71
45	6.8	-0.033	312	264	642	233	284	347	288	71
46	6.7	-0.033	313	265	652	234	284	349.6	288	71
47	6.6	-0.032	315	266	662	234	285	352.4	289	71
48	6.6	-0.032	317	267	671	235	285	355	289	71
49	6.5	-0.033	320	268	679	235	285	357.4	290	71
50	6.4	-0.032	322	270	687	236	286	360.2	289	71
51	6.2	-0.045	328	271	692	237	286	362.8	589	71
52	6.1	-0.041	337	272	701	238	287	367	404	71
53	6	-0.039	343	273	709	239	288	370.4	351	71
54	5.9	-0.037	348	275	717	241	290	374.2	330	71
55	5.8	-0.038	353	276	724	242	291	377.2	319	71
56	5.7	-0.036	357	277	730	244	292	380	315	71
57	5.6	-0.036	361	278	735	245	294	382.6	312	71
58	5.5	-0.036	365	279	739	247	296	385.2	310	71
59	5.5	-0.036	368	280	743	248	298	387.4	308	71
60	5.4	-0.035	371	281	746	250	300	389.6	307	71
61	5.3	-0.035	374	282	748	251	302	391.4	306	71
62	5.2	-0.035	377	283	750	253	305	393.6	305	71
63	5.2	-0.034	379	284	752	255	308	395.6	303	71
64	5.1	-0.034	381	284	753	256	311	397	302	71
65	5	-0.034	382	285	754	258	314	398.6	302	71
66	5	-0.034	384	286	754	259	317	400	301	71
67	4.9	-0.034	386	287	753	261	319	401.2	300	71
68	4.8	-0.033	387	287	752	262	321	401.8	299	71
69	4.8	-0.034	389	288	750	264	323	402.8	297	71
70	4.7	-0.032	390	289	748	265	326	403.6	296	71
71	4.6	-0.033	392	290	746	266	328	404.4	296	71
72	4.6	-0.033	393	291	744	268	330	405.2	297	71
73	4.5	-0.033	394	292	741	269	332	405.6	296	71
74	4.5	-0.032	396	293	739	270	335	406.6	296	71
75	4.4	-0.032	398	294	737	271	337	407.4	295	71
76	4.3	-0.032	399	294	735	273	339	408	296	71
77	4.3	-0.033	402	295	732	274	342	409	294	71

Wood Heater Preburn Data - ASTM E2780

Run: 2

Technician Signature:

Manufacturer:	Hearth & Home
Model:	Intrepiod IV Catalytic
Tracking No.:	2264
Project No.:	0135WS038E
Test Date:	1/4/18
Beginning Clock Time:	9:48

Preburn Fuel Data

Fuel Piece Lengths (in.):	6
Total Preburn Weight (lb):	13.4
Fuel Moisture Readings (% DB):	23.8
	22.2
	22.3
	22.2
Avg Preburn Moisture (% DB):	**22.63**

Coal Bed Range (lb):	**1.7** (min)	**2.1** (max)

			Temperatures (°F)							
Elapsed Time (min)	Scale (lb)	Stack Draft (in H_2O)	FB Top	FB Bottom	FB Back	FB Left	FB Right	Avg. FB	Stack	Ambient
78	4.2	-0.032	404	296	730	275	344	409.8	293	71
79	4.2	-0.031	407	297	729	276	346	411	293	71
80	4.1	-0.032	409	298	727	278	348	412	293	71
81	3.9	-0.043	416	299	724	278	351	413.6	577	71
82	3.8	-0.04	426	300	726	280	354	417.2	396	71
83	3.7	-0.038	437	301	729	281	356	420.8	347	72
84	3.7	-0.036	446	302	734	283	359	424.8	328	72
85	3.6	-0.036	454	303	739	285	362	428.6	320	71
86	3.5	-0.034	461	304	742	287	365	431.8	314	72
87	3.5	-0.034	468	305	745	289	369	435.2	309	72
88	3.4	-0.033	475	306	746	291	372	438	305	72
89	3.4	-0.033	480	306	746	293	374	439.8	303	72
90	3.3	-0.032	483	307	744	295	376	441	301	71
91	3.3	-0.033	488	307	742	296	379	442.4	298	72
92	3.2	-0.031	490	308	739	298	380	443	296	72
93	3.2	-0.03	492	309	735	300	382	443.6	293	72
94	3.1	-0.03	491	309	730	302	383	443	293	72
95	3.1	-0.031	491	310	725	304	384	442.8	290	72
96	3.1	-0.029	490	310	720	305	386	442.2	288	72
97	3	-0.03	489	311	714	307	387	441.6	286	72
98	3	-0.028	488	311	708	309	388	440.8	284	72
99	3	-0.028	487	312	702	310	389	440	282	72
100	2.9	-0.029	486	313	696	312	389	439.2	282	72
101	2.9	-0.028	485	313	691	313	390	438.4	280	72
102	2.9	-0.029	485	314	685	314	390	437.6	280	72
103	2.8	-0.028	486	315	679	316	391	437.4	279	72
104	2.8	-0.028	487	315	673	317	392	436.8	278	72
105	3.2	-0.105	489	316	665	319	392	436.2	378	72
106	4.4	-0.029	495	316	659	320	392	436.4	374	72
107	2.3	-0.033	505	317	656	321	392	438.2	362	72
108	2.3	-0.031	504	319	655	322	392	438.4	313	72
109	2.2	-0.028	499	319	655	324	392	437.8	293	72
110	2.2	-0.027	495	320	654	325	393	437.4	282	72
111	2.2	-0.027	490	321	652	327	393	436.6	276	72
112	2.2	-0.027	485	321	650	328	393	435.4	273	72
113	2.2	-0.026	481	321	647	329	394	434.4	269	72
114	2.1	-0.025	479	322	643	330	394	433.6	265	72
115	2.1	-0.026	476	321	639	330	395	432.2	262	72
116	2.1	-0.025	473	322	635	331	395	431.2	261	72

Wood Heater Preburn Data - ASTM E2780

Run:	**2**

Technician Signature: _____

Manufacturer:	Hearth & Home
Model:	Intrepiod IV Catalytic
Tracking No.:	2264
Project No.:	0135WS038E
Test Date:	1/4/18
Beginning Clock Time:	9:48

Preburn Fuel Data

Fuel Piece Lengths (in.):	6
Total Preburn Weight (lb):	13.4
Fuel Moisture Readings (% DB):	23.8
	22.2
	22.3
	22.2
Avg Preburn Moisture (% DB):	**22.63**

Coal Bed Range (lb):	**1.7** (min)	**2.1** (max)

			Temperatures (°F)							
Elapsed Time (min)	Scale (lb)	Stack Draft (in H_2O)	FB Top	FB Bottom	FB Back	FB Left	FB Right	Avg. FB	Stack	Ambient
117	2.1	-0.024	471	322	630	332	396	430.2	260	72
118	2.1	-0.023	470	322	625	333	396	429.2	258	72
119	2.1	-0.024	468	322	620	333	396	427.8	256	72
120	2.1	-0.023	466	322	615	333	397	426.6	255	72
121	2	-0.023	465	323	610	334	397	425.8	255	72
122	2	-0.023	464	323	605	334	397	424.6	254	72
123	2	-0.022	464	323	601	334	398	424	253	72

Wood Heater Test Fuel Data - ASTM E2780

Manufacturer:	Hearth & Home
Model:	Intrepiod IV Catalytic
Tracking No.:	2264
Project No.:	0135WS038E
Test Date:	1/4/2018
Run No.:	2

Firebox Volume (ft^3):	1.31
Fuel Piece Length (in):	13.5
2x4 Crib Weight (lb):	8.5
4x4 Crib Weight (lb):	0

Total Fuel Weight (Dry Basis, lb):	7.1	
Fuel Density (lb/ft^3, Dry Basis):	25.56	OK
Loading Density (lb/ft^3, Wet Basis):	6.49	OK
2x4 Percentage:	N/A	N/A

Coal Bed Range (20-25%): **1.7 - 2.125**

Test Fuel Piece	Weight (lb)	Size	Readings (Dry Basis %)			Dry Weight (lb)
1	1.4	2"x 4"	19.4	22.4	20.1	1.16
2	1.3	2"x 4"	19.2	20.1	18.7	1.09
3	1.2	2"x 4"	20.2	20.2	18.6	1.00
4	1.1	2"x 4"	21.6	19.1	18.9	0.92
5	1.3	2"x 4"	23.1	18.9	22.2	1.07

Spacer Readings (Dry Basis %)			
6.7	18.3		
8.0	20.6		
8.0	14.8		
11.4	20.5		
21.3	18.2		
19.3	19.2		
19.2	15.1		
13.9			
20.3			
18.3			
18.5			
14.1			
22.0			

Technician Signature: 

Wood Heater Test Data - ASTM E2780 / ASTM E2515

Run: 2

Manufacturer: Hearth & Home
Model: Intrepiod IV Catalytic
Tracking No.: 2264
Project No.: 0135WS038E
Test Date: 04-Jan-18
Beginning Clock Time: 11:53

Total Sampling Time: 266 min
Recording Interval: 1 min
Background Sample Volume: _____ cubic feet

Meter Box Y Factor: 0.981 (1) 0.984 (2) _____ (Amb)

Barometric Pressure:	Begin	Middle	End	Average
	30.10	30.06	30.08	30.08 "Hg

OMNI Equipment Numbers: _____

PM Control Modules: 0035, 0036
Dilution Tunnel MW(dry): 29.00 lb/lb-mole
Dilution Tunnel MW(wet): 28.78 lb/lb-mole
Dilution Tunnel H2O: 2.00 percent
Dilution Tunnel Static: -0.180 "H2O
Tunnel Area: 0.19635 ft2
Pitot Tube Cp: 0.99

Avg. Tunnel Velocity: 13.21 ft/sec.
Initial Tunnel Flow: 145.5 scfm
Average Tunnel Flow: 148.4 scfm
Post-Test Leak Check (1): 0.000 cfm @ 7 in. Hg
Post-Test Leak Check (2): 0.000 cfm @ 5 in. Hg
Average Test Piece Fuel Moisture: 20.18 Dry Basis %

Technician Signature: _____

Velocity Traverse Data	Pt.1	Pt.2	Pt.3	Pt.4	Pt.5	Pt.6	Pt.7	Pt.8	Center	
Initial dP	0.026	0.046	0.048	0.034	0.028	0.042	0.044	0.034	0.050	"H2O
Temp:	88	88	88	88	88	88	88	88	88	°F

V_{strav} 13.24 ft/sec V_{scent} 15.06 ft/sec F_p 0.879

	Particulate Sampling Data														Fuel Weight (lb)		Temperature Data (°F)													Stack Gas Data		
Elapsed Time (min)	Gas Meter 1 (ft^3)	Gas Meter 2 (ft^3)	Sample Rate 1 (cfm)	Sample Rate 2 (cfm)	Orifice dH 1 ("H_2O)	Meter 1 Temp (°F)	Meter 1 Vacuum ("Hg)	Orifice dH 2 ("H_2O)	Meter 2 Temp (°F)	Meter 2 Vacuum ("Hg)	Dilution Tunnel (°F)	Dilution Tunnel Center dP	Pro. Rate 1	Pro. Rate 2	Scale Reading	Weight Change	Firebox Top	Firebox Bottom	Firebox Back	Firebox Left	Firebox Right	Avg. Stove Surface	Catalyst Exit	Stack	Filter 1	Dryer Exit 1	Filter 2	Dryer Exit 2	Ambient	Draft ("H_2O)	CO_2 (%)	CO (%)
0	0.000	0.000			0.95	75	1.76	0.89	75	1.1	104	0.050			8.5		459	323	591	334	398	421	930	263	70	67	71	66	72	-0.022	1.92	0.16
1	0.156	0.156	0.16	0.16	1.34	75	1.98	1.14	75	1.1	125	0.050	99	100	8.5	0	452	323	583	334	399	418	916	254	72	72	72	68	72	-0.043	1	0.17
2	0.318	0.317	0.16	0.16	1.34	75	1.98	1.14	75	1.1	104	0.050	101	101	8.4	-0.1	431	323	579	333	399	413	1041	247	72	73	72	68	72	-0.023	7.69	0.26
3	0.482	0.481	0.16	0.16	1.34	75	1.98	1.13	75	1.1	94	0.050	101	102	8.4	0	417	324	578	332	398	410	1065	242	72	73	72	68	72	-0.025	8.36	0.02
4	0.645	0.644	0.16	0.16	1.34	75	1.98	1.15	75	1.1	92	0.050	101	101	8.3	-0.1	403	324	580	331	397	407	1088	242	72	73	72	69	72	-0.025	8.47	0.01
5	0.807	0.807	0.16	0.16	1.33	75	1.98	1.15	75	1.2	90	0.050	100	101	8.3	0	392	323	583	330	396	405	1105	244	72	73	72	69	72	-0.026	8.41	0.01
6	0.970	0.969	0.16	0.16	1.33	75	1.97	1.16	75	1.2	89	0.050	100	100	8.2	-0.1	383	323	587	328	394	403	1095	246	72	73	72	69	72	-0.026	7.61	0.01
7	1.132	1.133	0.16	0.16	1.33	75	1.98	1.15	75	1.2	89	0.050	100	102	8.2	0	375	324	591	327	392	402	1084	249	72	73	72	69	72	-0.026	7.46	0.02
8	1.294	1.297	0.16	0.16	1.33	75	1.97	1.15	75	1.1	88	0.050	100	101	8.1	-0.1	367	323	596	325	389	400	1094	252	72	73	72	69	72	-0.026	7.99	0.01
9	1.457	1.459	0.16	0.16	1.32	75	1.97	1.14	76	1.1	88	0.050	100	100	8.1	0	361	323	600	323	387	399	1099	253	72	73	72	69	72	-0.027	7.98	0.01
10	1.620	1.622	0.16	0.16	1.33	75	1.96	1.15	76	1.2	88	0.050	100	101	8.0	-0.1	356	322	604	321	384	397	1116	255	72	73	73	69	72	-0.028	8.44	0.01
11	1.782	1.785	0.16	0.16	1.32	75	1.96	1.15	76	1.1	88	0.050	100	101	7.9	-0.1	353	322	608	319	381	397	1136	258	72	73	73	69	72	-0.028	9.05	0.01
12	1.944	1.948	0.16	0.16	1.32	76	1.97	1.14	76	1.1	88	0.050	99	101	7.9	0	349	322	612	317	378	396	1139	259	73	73	73	69	72	-0.029	8.75	0.01
13	2.105	2.111	0.16	0.16	1.32	76	1.96	1.14	76	1.1	88	0.050	99	101	7.8	-0.1	347	321	616	315	375	395	1144	262	73	73	73	69	72	-0.029	8.73	0.01
14	2.267	2.274	0.16	0.16	1.32	76	1.96	1.14	76	1.1	89	0.050	100	101	7.7	-0.1	344	320	620	312	373	394	1149	265	73	73	73	69	72	-0.028	8.9	0.01
15	2.429	2.436	0.16	0.16	1.32	76	1.95	1.14	76	1.1	89	0.050	100	100	7.7	0	342	320	625	310	370	393	1157	267	73	73	73	70	72	-0.030	9.28	0.01
16	2.593	2.599	0.16	0.16	1.35	76	1.99	1.14	76	1.1	89	0.050	101	101	7.6	-0.1	341	319	629	308	368	393	1158	270	73	73	73	70	72	-0.030	8.95	0.01
17	2.757	2.762	0.16	0.16	1.35	76	1.98	1.13	77	1.1	89	0.050	101	101	7.6	0	339	318	633	306	366	392	1153	271	73	73	73	70	72	-0.030	8.69	0.01
18	2.920	2.924	0.16	0.16	1.34	77	1.98	1.13	77	1.1	89	0.050	100	100	7.5	-0.1	339	317	637	304	364	392	1175	273	73	73	73	70	72	-0.031	9.38	0.01
19	3.083	3.086	0.16	0.16	1.34	77	1.98	1.13	77	1.1	89	0.050	100	100	7.4	-0.1	338	316	641	302	362	392	1176	274	73	73	73	70	72	-0.031	8.93	0.01
20	3.247	3.248	0.16	0.16	1.34	77	1.98	1.14	77	1.1	89	0.050	101	100	7.3	-0.1	338	315	645	300	361	392	1168	276	73	73	73	70	72	-0.031	8.67	0.01
21	3.410	3.411	0.16	0.16	1.34	77	1.98	1.13	77	1.1	89	0.050	100	101	7.3	0	338	314	648	299	359	392	1170	276	73	73	73	70	72	-0.031	8.75	0.01
22	3.573	3.574	0.16	0.16	1.35	77	1.99	1.13	77	1.1	90	0.050	100	101	7.2	-0.1	337	313	651	297	357	391	1175	277	73	73	73	70	72	-0.030	8.87	0.01
23	3.736	3.736	0.16	0.16	1.34	77	1.99	1.13	78	1.2	90	0.050	100	100	7.1	-0.1	337	313	654	295	356	391	1173	277	73	73	73	70	72	-0.032	8.59	0.01
24	3.900	3.898	0.16	0.16	1.34	77	1.98	1.13	78	1.1	90	0.050	101	100	7.1	0	336	312	657	294	355	391	1175	279	73	73	73	70	72	-0.031	8.9	0.01
25	4.065	4.061	0.17	0.16	1.34	78	1.99	1.14	78	1.2	90	0.050	101	100	7.0	-0.1	336	311	658	292	354	390	1172	280	73	73	73	70	72	-0.031	8.52	0.02
26	4.228	4.224	0.16	0.16	1.34	78	1.98	1.13	78	1.2	89	0.050	100	100	6.9	-0.1	336	310	660	291	353	390	1173	280	73	73	73	70	72	-0.031	8.58	0.02
27	4.391	4.386	0.16	0.16	1.33	78	1.99	1.13	78	1.1	90	0.050	100	100	6.9	0	334	309	662	290	352	389	1194	280	73	73	73	70	72	-0.031	9.33	0.02
28	4.555	4.548	0.16	0.16	1.33	78	1.98	1.14	78	1.1	89	0.050	100	100	6.8	-0.1	334	308	665	288	351	389	1213	280	73	73	73	70	72	-0.031	9.86	0.02
29	4.718	4.710	0.16	0.16	1.34	78	1.99	1.14	78	1.2	90	0.050	100	100	6.7	-0.1	336	307	668	287	350	390	1225	282	73	74	73	70	72	-0.031	9.65	0.02
30	4.882	4.873	0.16	0.16	1.34	78	1.99	1.13	79	1.2	90	0.050	101	100	6.7	0	339	306	671	286	350	390	1225	284	74	74	73	70	72	-0.033	9.88	0.02
31	5.045	5.036	0.16	0.16	1.34	79	1.98	1.13	79	1.1	90	0.050	100	100	6.6	-0.1	343	305	675	285	348	391	1227	285	74	74	73	70	72	-0.033	10.01	0.02
32	5.209	5.198	0.16	0.16	1.35	79	1.99	1.13	79	1.2	91	0.050	100	100	6.5	-0.1	347	304	678	283	348	392	1234	287	74	74	74	70	72	-0.033	10.12	0.02
33	5.372	5.362	0.16	0.16	1.35	79	1.98	1.16	79	1.2	91	0.050	100	101	6.4	-0.1	352	303	681	283	347	393	1244	287	74	74	74	70	72	-0.034	10.05	0.02
34	5.537	5.527	0.17	0.17	1.34	79	1.98	1.17	79	1.2	91	0.050	101	102	6.3	-0.1	355	302	685	282	346	394	1251	290	74	74	74	70	72	-0.033	10.27	0.02
35	5.701	5.692	0.16	0.17	1.34	79	1.98	1.16	79	1.2	91	0.050	100	102	6.3	0	359	301	688	281	346	395	1247	291	74	74	74	70	72	-0.033	10.26	0.02
36	5.864	5.857	0.16	0.17	1.34	79	1.99	1.16	79	1.2	91	0.050	100	102	6.2	-0.1	363	300	691	280	346	396	1241	292	74	74	74	70	72	-0.033	10.07	0.02

Wood Heater Test Data - ASTM E2780 / ASTM E2515

Run: 2

Manufacturer: Hearth & Home
Model: Intrepiod IV Catalytic
Tracking No.: 2264
Project No.: 0135WS038E
Test Date: 04-Jan-18
Beginning Clock Time: 11:53

Total Sampling Time: 266 min
Recording Interval: 1 min
Background Sample Volume: _____ cubic feet

Meter Box Y Factor: 0.981 (1) 0.984 (2) _____ (Amb)

Barometric Pressure:	Begin	Middle	End	Average
	30.10	30.06	30.08	30.08 "Hg

OMNI Equipment Numbers: _____

PM Control Modules: 0035, 0036
Dilution Tunnel MW(dry): 29.00 lb/lb-mole
Dilution Tunnel MW(wet): 28.78 lb/lb-mole
Dilution Tunnel H2O: 2.00 percent
Dilution Tunnel Static: -0.180 "H2O
Tunnel Area: 0.19635 ft2
Pitot Tube Cp: 0.99

Avg. Tunnel Velocity: 13.21 ft/sec.
Initial Tunnel Flow: 145.5 scfm
Average Tunnel Flow: 148.4 scfm
Post-Test Leak Check (1): 0.000 cfm @ 7 in. Hg
Post-Test Leak Check (2): 0.000 cfm @ 5 in. Hg
Average Test Piece Fuel Moisture: 20.18 Dry Basis %

Technician Signature: _____

Velocity Traverse Data	Pt.1	Pt.2	Pt.3	Pt.4	Pt.5	Pt.6	Pt.7	Pt.8	Center	
Initial dP	0.026	0.046	0.048	0.034	0.028	0.042	0.044	0.034	0.050	"H2O
Temp:	88	88	88	88	88	88	88	88	88	°F

V_{strav} 13.24 ft/sec V_{scent} 15.06 ft/sec F_p 0.879

	Particulate Sampling Data														Fuel Weight (lb)		Temperature Data (°F)												Stack Gas Data		
Elapsed Time (min)	Gas Meter 1 (ft^3)	Gas Meter 2 (ft^3)	Sample Rate 1 (cfm)	Sample Rate 2 (cfm)	Orifice dH 1 ("H_2O)	Meter 1 Temp (°F)	Meter 1 Vacuum ("Hg)	Orifice dH 2 ("H_2O)	Meter 2 Temp (°F)	Meter 2 Vacuum ("Hg)	Dilution Tunnel (°F)	Dilution Tunnel Center dP	Pro. Rate 1	Pro. Rate 2	Scale Reading	Weight Change	Firebox Top	Firebox Bottom	Firebox Back	Firebox Left	Firebox Right	Avg. Stove Surface	Catalyst Exit	Stack	Filter 1	Dryer Exit 1	Filter 2	Dryer Exit 2	Ambient	Draft ("H_2O)	CO_2 (%)	CO (%)
37	6.028	6.022	0.16	0.17	1.33	79	1.99	1.16	80	1.2	91	0.050	100	101	6.1	-0.1	367	299	694	280	345	397	1232	292	74	74	74	70	72	-0.033	9.82	0.02
38	6.191	6.187	0.16	0.17	1.34	80	1.98	1.16	80	1.2	91	0.050	100	101	6.0	-0.1	372	299	696	279	345	398	1229	292	74	74	74	70	72	-0.033	9.79	0.02
39	6.355	6.352	0.16	0.17	1.33	80	1.99	1.16	80	1.2	91	0.050	100	101	6.0	0	375	298	698	279	345	399	1229	290	74	74	74	70	72	-0.034	9.93	0.02
40	6.519	6.516	0.16	0.16	1.34	80	1.98	1.16	80	1.2	91	0.050	100	101	5.9	-0.1	379	297	699	279	345	400	1228	292	74	74	74	70	72	-0.033	9.96	0.02
41	6.683	6.681	0.16	0.17	1.34	80	1.98	1.16	80	1.2	91	0.050	100	101	5.8	-0.1	383	296	701	278	346	401	1225	291	74	74	74	71	72	-0.033	9.88	0.02
42	6.847	6.845	0.16	0.16	1.34	80	1.98	1.17	80	1.2	91	0.050	100	101	5.7	-0.1	387	295	702	278	346	402	1219	291	74	74	74	71	72	-0.033	9.65	0.02
43	7.011	7.011	0.16	0.17	1.34	80	1.98	1.16	80	1.2	91	0.050	100	102	5.7	0	391	294	702	278	346	402	1213	292	74	74	74	71	72	-0.033	9.56	0.02
44	7.175	7.176	0.16	0.17	1.33	80	1.99	1.16	80	1.2	91	0.050	100	101	5.6	-0.1	394	294	703	278	347	403	1208	291	74	74	74	71	72	-0.032	9.42	0.02
45	7.340	7.341	0.17	0.17	1.34	80	1.99	1.16	81	1.2	91	0.050	101	101	5.5	-0.1	399	293	703	278	348	404	1207	291	74	74	74	71	72	-0.033	9.57	0.02
46	7.503	7.506	0.16	0.17	1.34	80	1.98	1.16	81	1.2	91	0.050	100	101	5.5	0	402	292	703	278	348	405	1205	291	74	74	74	71	72	-0.032	9.55	0.01
47	7.668	7.671	0.17	0.17	1.34	81	1.99	1.17	81	1.2	91	0.050	101	101	5.4	-0.1	405	291	703	278	349	405	1203	291	74	74	74	71	72	-0.033	9.49	0.01
48	7.832	7.836	0.16	0.17	1.34	81	1.99	1.16	81	1.2	91	0.050	100	101	5.3	-0.1	410	291	703	278	349	406	1202	291	74	74	74	71	72	-0.034	9.65	0.01
49	7.995	8.001	0.16	0.16	1.33	81	1.98	1.16	81	1.2	92	0.050	100	101	5.3	0	413	290	703	278	350	407	1199	292	74	74	74	71	72	-0.032	9.74	0.01
50	8.160	8.166	0.17	0.17	1.34	81	1.99	1.17	81	1.2	92	0.050	101	101	5.2	-0.1	417	289	703	278	351	408	1201	292	74	74	74	71	72	-0.033	9.9	0.01
51	8.324	8.331	0.16	0.16	1.34	81	1.99	1.17	81	1.2	91	0.050	100	101	5.1	-0.1	421	289	702	278	351	408	1205	293	74	74	74	71	72	-0.033	9.86	0.01
52	8.488	8.496	0.16	0.17	1.34	81	1.99	1.16	81	1.2	92	0.050	100	101	5.1	0	425	288	703	278	352	409	1210	293	74	74	74	71	72	-0.032	10.11	0.02
53	8.652	8.661	0.16	0.16	1.35	81	1.99	1.17	81	1.2	92	0.050	100	101	5.0	-0.1	429	287	703	278	353	410	1216	293	74	74	74	71	72	-0.032	10.34	0.02
54	8.817	8.827	0.17	0.17	1.34	81	1.98	1.16	81	1.2	92	0.050	101	102	4.9	-0.1	433	287	703	279	354	411	1215	291	74	74	74	71	72	-0.034	10.17	0.01
55	8.981	8.993	0.16	0.17	1.35	81	1.99	1.17	82	1.2	92	0.050	100	102	4.9	0	437	286	704	279	354	412	1213	292	74	74	74	71	72	-0.033	10.02	0.01
56	9.146	9.158	0.17	0.16	1.34	81	1.99	1.16	82	1.2	92	0.050	101	101	4.8	-0.1	442	285	704	279	355	413	1212	292	74	74	74	71	72	-0.033	9.86	0.01
57	9.310	9.323	0.16	0.17	1.34	81	1.99	1.16	82	1.2	92	0.050	100	101	4.7	-0.1	447	285	704	280	356	414	1224	293	74	74	74	71	72	-0.033	10.35	0.02
58	9.475	9.488	0.16	0.16	1.34	81	1.99	1.16	82	1.2	92	0.050	101	101	4.7	0	452	284	705	280	357	416	1237	293	74	74	74	71	72	-0.034	10.53	0.02
59	9.639	9.651	0.16	0.16	1.34	82	1.99	1.14	82	1.2	92	0.050	100	100	4.6	-0.1	457	284	706	281	357	417	1248	293	74	74	74	71	72	-0.033	10.83	0.04
60	9.804	9.815	0.17	0.16	1.34	82	1.99	1.14	82	1.2	92	0.050	101	101	4.5	-0.1	462	283	708	281	358	418	1253	293	74	74	74	71	73	-0.032	10.91	0.05
61	9.970	9.979	0.17	0.16	1.34	82	1.98	1.14	82	1.2	92	0.050	101	101	4.4	-0.1	466	283	710	282	359	420	1261	294	74	74	74	71	73	-0.033	11.14	0.06
62	10.134	10.142	0.16	0.16	1.33	82	1.99	1.14	82	1.2	92	0.050	100	100	4.4	0	470	282	712	283	360	421	1267	294	75	74	74	71	72	-0.034	11.12	0.07
63	10.298	10.305	0.16	0.16	1.34	82	1.99	1.13	82	1.2	92	0.050	100	100	4.3	-0.1	474	282	714	284	361	423	1274	294	76	75	74	71	73	-0.031	11.32	0.14
64	10.463	10.469	0.16	0.16	1.34	82	1.99	1.14	82	1.2	92	0.050	101	101	4.2	-0.1	478	281	717	284	361	424	1268	295	76	75	74	71	73	-0.032	10.73	0.06
65	10.627	10.632	0.16	0.16	1.34	82	1.99	1.14	82	1.2	92	0.050	100	100	4.1	-0.1	484	281	718	285	363	426	1271	296	76	75	74	71	73	-0.033	11.19	0.03
66	10.792	10.796	0.16	0.16	1.34	82	1.99	1.14	82	1.2	92	0.050	101	101	4.1	0	487	280	720	287	364	428	1275	296	76	75	74	71	73	-0.033	11.34	0.05
67	10.956	10.960	0.16	0.16	1.34	82	1.99	1.14	82	1.2	92	0.050	100	101	4.0	-0.1	491	280	722	287	364	429	1273	296	76	75	74	71	73	-0.033	10.95	0.05
68	11.121	11.123	0.17	0.16	1.35	82	2	1.13	83	1.2	92	0.050	101	100	3.9	-0.1	494	280	723	288	366	430	1274	296	76	75	74	71	73	-0.034	11.35	0.14
69	11.285	11.286	0.16	0.16	1.34	82	2	1.14	83	1.2	92	0.050	100	100	3.8	-0.1	496	279	725	289	366	431	1276	296	76	75	74	71	73	-0.033	11.14	0.07
70	11.450	11.450	0.16	0.16	1.35	82	1.99	1.14	83	1.2	92	0.050	101	100	3.8	0	497	279	726	291	367	432	1277	296	76	75	75	71	73	-0.033	10.63	0.02
71	11.614	11.614	0.16	0.16	1.35	82	1.99	1.14	83	1.2	93	0.050	100	100	3.7	-0.1	499	278	728	292	368	433	1272	297	76	75	75	71	73	-0.033	11.16	0.03
72	11.779	11.778	0.16	0.16	1.34	82	1.99	1.14	83	1.2	93	0.050	101	100	3.6	-0.1	500	278	729	293	369	434	1272	295	76	75	75	71	73	-0.032	10.97	0.04
73	11.944	11.941	0.17	0.16	1.34	83	1.99	1.14	83	1.2	93	0.050	100	100	3.6	0	500	278	730	294	370	434	1270	295	76	75	75	72	73	-0.033	10.7	0.04

Wood Heater Test Data - ASTM E2780 / ASTM E2515

Run: 2

Manufacturer: Hearth & Home
Model: Intrepiod IV Catalytic
Tracking No.: 2264
Project No.: 0135WS038E
Test Date: 04-Jan-18
Beginning Clock Time: 11:53

Total Sampling Time: 266 min
Recording Interval: 1 min
Background Sample Volume: _____ cubic feet

Meter Box Y Factor: 0.981 (1) 0.984 (2) _____ (Amb)

Barometric Pressure:	Begin	Middle	End	Average
	30.10	30.06	30.08	30.08 "Hg

OMNI Equipment Numbers: _____

PM Control Modules: 0035, 0036
Dilution Tunnel MW(dry): 29.00 lb/lb-mole
Dilution Tunnel MW(wet): 28.78 lb/lb-mole
Dilution Tunnel H2O: 2.00 percent
Dilution Tunnel Static: -0.180 "H2O
Tunnel Area: 0.19635 ft2
Pitot Tube Cp: 0.99

Avg. Tunnel Velocity: 13.21 ft/sec.
Initial Tunnel Flow: 145.5 scfm
Average Tunnel Flow: 148.4 scfm
Post-Test Leak Check (1): 0.000 cfm @ 7 in. Hg
Post-Test Leak Check (2): 0.000 cfm @ 5 in. Hg
Average Test Piece Fuel Moisture: 20.18 Dry Basis %

Technician Signature: _____

Velocity Traverse Data	Pt.1	Pt.2	Pt.3	Pt.4	Pt.5	Pt.6	Pt.7	Pt.8	Center	
Initial dP	0.026	0.046	0.048	0.034	0.028	0.042	0.044	0.034	0.050	"H2O
Temp:	88	88	88	88	88	88	88	88	88	°F

V_{strav} 13.24 ft/sec V_{scent} 15.06 ft/sec F_p 0.879

	Particulate Sampling Data														Fuel Weight (lb)		Temperature Data (°F)													Stack Gas Data		
Elapsed Time (min)	Gas Meter 1 (ft^3)	Gas Meter 2 (ft^3)	Sample Rate 1 (cfm)	Sample Rate 2 (cfm)	Orifice dH 1 ("H_2O)	Meter 1 Temp (°F)	Meter 1 Vacuum ("Hg)	Orifice dH 2 ("H_2O)	Meter 2 Temp (°F)	Meter 2 Vacuum ("Hg)	Dilution Tunnel (°F)	Dilution Tunnel Center dP	Pro. Rate 1	Pro. Rate 2	Scale Reading	Weight Change	Firebox Top	Firebox Bottom	Firebox Back	Firebox Left	Firebox Right	Avg. Stove Surface	Catalyst Exit	Stack	Filter 1	Dryer Exit 1	Filter 2	Dryer Exit 2	Ambient	Draft ("H_2O)	CO_2 (%)	CO (%)
74	12.109	12.105	0.16	0.16	1.34	83	1.99	1.13	83	1.2	92	0.050	100	100	3.5	-0.1	501	277	731	295	371	435	1265	294	76	75	75	72	73	-0.031	10.74	0.04
75	12.273	12.268	0.16	0.16	1.34	83	1.99	1.14	83	1.2	92	0.050	100	100	3.5	0	501	277	731	296	372	435	1255	294	76	75	75	72	73	-0.032	10.49	0.02
76	12.438	12.432	0.17	0.16	1.34	83	2	1.14	83	1.2	92	0.050	100	100	3.4	-0.1	502	277	731	297	373	436	1247	294	75	75	75	72	73	-0.032	10.37	0.02
77	12.603	12.595	0.16	0.16	1.33	83	1.99	1.14	83	1.2	92	0.050	100	100	3.3	-0.1	504	277	731	298	374	437	1239	292	75	75	75	72	73	-0.031	10.23	0.01
78	12.767	12.760	0.16	0.16	1.34	83	1.99	1.14	83	1.2	92	0.050	100	101	3.3	0	505	276	731	299	375	437	1232	291	75	75	75	72	72	-0.031	10.01	0.01
79	12.932	12.923	0.17	0.16	1.34	83	1.99	1.14	83	1.2	92	0.050	100	100	3.2	-0.1	507	276	730	300	376	438	1223	291	75	75	75	72	72	-0.031	9.93	0.01
80	13.096	13.087	0.16	0.16	1.34	83	1.99	1.14	83	1.2	92	0.050	100	100	3.2	0	508	276	729	301	377	438	1212	290	75	75	75	72	72	-0.030	9.77	0.01
81	13.261	13.250	0.16	0.16	1.35	83	2	1.14	83	1.2	92	0.050	100	100	3.1	-0.1	509	275	727	302	378	438	1201	289	75	75	75	72	73	-0.031	9.46	0.01
82	13.426	13.414	0.17	0.16	1.34	83	1.99	1.15	83	1.2	92	0.050	100	100	3.1	0	511	275	726	302	379	439	1192	289	75	75	75	72	73	-0.031	9.35	0.01
83	13.591	13.578	0.16	0.16	1.34	83	2	1.14	83	1.2	92	0.050	100	100	3.0	-0.1	513	275	724	303	379	439	1183	289	75	75	75	72	73	-0.031	9.21	0.01
84	13.756	13.743	0.17	0.17	1.35	83	1.99	1.14	83	1.2	93	0.050	100	101	3.0	0	514	275	722	304	380	439	1176	289	75	75	75	72	73	-0.031	9.27	0.01
85	13.921	13.906	0.16	0.16	1.35	83	1.99	1.14	83	1.2	92	0.050	100	100	2.9	-0.1	516	275	719	305	381	439	1170	289	75	75	75	72	73	-0.030	9.26	0.01
86	14.085	14.069	0.16	0.16	1.34	83	2	1.14	83	1.2	92	0.050	100	100	2.9	0	517	275	717	306	382	439	1166	288	75	75	75	72	73	-0.030	9.32	0.01
87	14.250	14.233	0.16	0.16	1.35	83	2	1.14	84	1.2	93	0.050	100	100	2.8	-0.1	520	274	715	307	383	440	1160	288	75	75	75	72	73	-0.030	9.24	0.01
88	14.415	14.397	0.16	0.16	1.35	83	2	1.14	84	1.2	92	0.050	100	100	2.8	0	518	274	712	308	384	439	1153	288	75	75	75	72	73	-0.030	9.12	0.01
89	14.580	14.561	0.17	0.16	1.34	83	1.99	1.14	84	1.2	93	0.050	100	100	2.7	-0.1	518	274	710	308	384	439	1141	285	75	75	75	72	73	-0.029	8.82	0.01
90	14.746	14.725	0.17	0.16	1.33	83	1.98	1.14	84	1.2	92	0.050	101	100	2.7	0	519	274	707	310	386	439	1128	285	75	75	75	72	73	-0.028	8.62	0.01
91	14.911	14.889	0.16	0.16	1.34	83	1.99	1.14	84	1.2	92	0.050	100	100	2.6	-0.1	518	274	703	310	386	438	1115	285	75	75	75	72	73	-0.029	8.44	0.02
92	15.076	15.052	0.17	0.16	1.35	83	1.99	1.15	84	1.2	91	0.050	100	99	2.6	0	518	274	700	311	387	438	1102	283	75	75	75	72	73	-0.029	8.08	0.03
93	15.240	15.216	0.16	0.16	1.34	83	1.99	1.14	84	1.2	91	0.050	100	100	2.6	0	519	274	696	312	388	438	1090	281	75	75	75	72	72	-0.029	7.86	0.06
94	15.405	15.380	0.16	0.16	1.34	83	1.99	1.14	84	1.2	89	0.050	100	100	2.5	-0.1	519	274	693	313	388	437	1080	282	75	75	75	72	71	-0.030	7.64	0.09
95	15.570	15.544	0.17	0.16	1.34	83	1.99	1.14	84	1.2	88	0.050	100	100	2.5	0	517	274	689	314	389	437	1073	281	75	75	74	72	70	-0.029	7.41	0.13
96	15.736	15.709	0.17	0.16	1.34	84	1.99	1.14	84	1.2	89	0.050	101	100	2.5	0	518	274	684	314	390	436	1067	280	75	75	74	72	71	-0.030	7.3	0.16
97	15.901	15.873	0.16	0.16	1.34	84	1.99	1.14	84	1.2	89	0.050	100	100	2.4	-0.1	518	274	679	315	391	435	1062	279	75	75	74	72	71	-0.030	7.14	0.19
98	16.066	16.037	0.16	0.16	1.34	84	1.99	1.14	84	1.2	88	0.050	100	100	2.4	0	517	274	674	316	391	434	1056	278	74	75	74	72	71	-0.029	7.17	0.23
99	16.231	16.201	0.17	0.16	1.34	83	1.99	1.15	84	1.2	89	0.050	100	100	2.4	0	517	274	669	316	392	434	1048	278	74	75	74	72	71	-0.029	7.07	0.23
100	16.396	16.365	0.16	0.16	1.34	83	1.98	1.15	84	1.2	89	0.050	100	100	2.3	-0.1	515	274	664	317	392	432	1040	276	74	75	74	72	72	-0.029	6.77	0.25
101	16.561	16.529	0.16	0.16	1.35	83	1.99	1.15	84	1.2	89	0.050	100	100	2.3	0	514	274	659	317	393	431	1032	276	74	75	74	72	72	-0.027	6.73	0.27
102	16.727	16.694	0.17	0.16	1.34	83	1.99	1.14	84	1.2	89	0.050	101	100	2.3	0	513	274	655	318	393	431	1001	274	74	75	74	72	72	-0.027	7.36	0.15
103	16.892	16.858	0.16	0.16	1.35	83	1.99	1.14	84	1.2	90	0.050	100	100	2.2	-0.1	513	274	650	319	394	430	988	272	74	74	74	72	72	-0.027	7.43	0.15
104	17.057	17.022	0.16	0.16	1.35	83	1.99	1.14	84	1.2	89	0.050	100	100	2.2	0	513	274	644	319	394	429	981	271	74	74	74	71	72	-0.026	7.3	0.17
105	17.222	17.186	0.17	0.16	1.35	83	1.99	1.15	84	1.2	90	0.050	100	100	2.2	0	512	274	640	320	394	428	975	270	74	74	74	71	72	-0.026	7.09	0.19
106	17.387	17.350	0.16	0.16	1.35	83	1.99	1.14	84	1.2	90	0.050	100	100	2.1	-0.1	513	275	634	320	395	427	974	269	74	74	74	71	72	-0.026	7.02	0.22
107	17.552	17.514	0.16	0.16	1.35	83	1.98	1.15	84	1.2	90	0.050	100	100	2.1	0	513	275	630	321	395	427	971	267	74	74	74	71	72	-0.026	6.89	0.25
108	17.718	17.678	0.17	0.16	1.35	83	1.99	1.14	84	1.2	90	0.050	101	100	2.1	0	514	275	625	321	395	426	964	266	74	74	74	71	72	-0.026	6.74	0.27
109	17.883	17.843	0.16	0.16	1.35	83	1.99	1.14	84	1.2	90	0.050	100	101	2.1	0	514	275	620	322	396	425	956	266	74	74	74	71	73	-0.026	6.63	0.29
110	18.048	18.007	0.16	0.16	1.35	83	1.99	1.14	84	1.2	90	0.050	100	100	2.0	-0.1	514	275	615	323	396	425	943	265	74	74	74	71	72	-0.025	6.57	0.28

Wood Heater Test Data - ASTM E2780 / ASTM E2515

Run: 2

Manufacturer: Hearth & Home
Model: Intrepiod IV Catalytic
Tracking No.: 2264
Project No.: 0135WS038E
Test Date: 04-Jan-18
Beginning Clock Time: 11:53

Total Sampling Time: 266 min
Recording Interval: 1 min
Background Sample Volume: _____ cubic feet

Meter Box Y Factor: 0.981 (1) 0.984 (2) _____ (Amb)

Barometric Pressure:	Begin	Middle	End	Average
	30.10	30.06	30.08	30.08 "Hg

OMNI Equipment Numbers: _____

PM Control Modules: 0035, 0036
Dilution Tunnel MW(dry): 29.00 lb/lb-mole
Dilution Tunnel MW(wet): 28.78 lb/lb-mole
Dilution Tunnel H2O: 2.00 percent
Dilution Tunnel Static: -0.180 "H2O
Tunnel Area: 0.19635 ft2
Pitot Tube Cp: 0.99

Avg. Tunnel Velocity: 13.21 ft/sec.
Initial Tunnel Flow: 145.5 scfm
Average Tunnel Flow: 148.4 scfm
Post-Test Leak Check (1): 0.000 cfm @ 7 in. Hg
Post-Test Leak Check (2): 0.000 cfm @ 5 in. Hg
Average Test Piece Fuel Moisture: 20.18 Dry Basis %

Technician Signature: _____

Velocity Traverse Data	Pt.1	Pt.2	Pt.3	Pt.4	Pt.5	Pt.6	Pt.7	Pt.8	Center	
Initial dP	0.026	0.046	0.048	0.034	0.028	0.042	0.044	0.034	0.050	"H2O
Temp:	88	88	88	88	88	88	88	88	88	°F

V_{strav} 13.24 ft/sec V_{scent} 15.06 ft/sec F_p 0.879

	Particulate Sampling Data														Fuel Weight (lb)		Temperature Data (°F)												Stack Gas Data		
Elapsed Time (min)	Gas Meter 1 (ft^3)	Gas Meter 2 (ft^3)	Sample Rate 1 (cfm)	Sample Rate 2 (cfm)	Orifice dH 1 ("H_2O)	Meter 1 Temp (°F)	Meter 1 Vacuum ("Hg)	Orifice dH 2 ("H_2O)	Meter 2 Temp (°F)	Meter 2 Vacuum ("Hg)	Dilution Tunnel (°F)	Dilution Tunnel Center dP	Pro. Rate 1	Pro. Rate 2	Scale Reading	Weight Change	Firebox Top	Firebox Bottom	Firebox Back	Firebox Left	Firebox Right	Avg. Stove Surface	Catalyst Exit	Stack	Filter 1	Dryer Exit 1	Filter 2	Dryer Exit 2	Ambient	Draft ("H_2O)	CO_2 (%)	CO (%)
111	18.213	18.170	0.17	0.16	1.35	83	1.99	1.14	84	1.2	90	0.050	100	99	2.0	0	514	275	611	323	396	424	931	264	74	74	74	71	73	-0.024	6.44	0.28
112	18.379	18.334	0.17	0.16	1.35	83	1.99	1.14	84	1.2	90	0.050	101	100	2.0	0	513	275	605	323	396	422	919	262	74	74	74	71	73	-0.024	6.41	0.28
113	18.544	18.498	0.16	0.16	1.34	83	1.99	1.15	84	1.2	89	0.050	100	100	2.0	0	513	275	601	324	396	422	909	261	74	74	74	71	73	-0.024	6.27	0.28
114	18.710	18.662	0.17	0.16	1.34	83	1.99	1.15	84	1.2	90	0.050	101	100	2.0	0	512	276	596	324	397	421	900	259	74	74	74	71	73	-0.024	6.08	0.3
115	18.875	18.827	0.16	0.17	1.34	83	1.99	1.14	84	1.2	89	0.050	100	100	1.9	-0.1	512	276	591	325	397	420	892	259	74	74	74	71	73	-0.023	6.1	0.31
116	19.040	18.991	0.16	0.16	1.35	83	1.99	1.14	84	1.2	90	0.050	100	100	1.9	0	511	276	586	325	397	419	884	257	74	74	74	71	73	-0.022	5.98	0.33
117	19.205	19.155	0.16	0.16	1.35	84	1.98	1.14	84	1.2	89	0.050	100	100	1.9	0	511	276	582	325	398	418	878	256	74	74	74	71	73	-0.022	5.91	0.35
118	19.370	19.319	0.17	0.16	1.34	84	1.99	1.14	84	1.2	89	0.050	100	100	1.9	0	509	277	577	326	398	417	871	254	74	74	74	71	72	-0.023	5.81	0.35
119	19.536	19.483	0.17	0.16	1.34	83	1.99	1.15	84	1.2	88	0.050	101	100	1.9	0	508	277	572	326	398	416	865	253	74	74	74	71	73	-0.023	5.71	0.36
120	19.701	19.647	0.16	0.16	1.34	84	1.98	1.14	84	1.2	89	0.050	100	100	1.9	0	509	277	567	326	398	415	860	252	74	74	74	71	73	-0.023	5.72	0.38
121	19.866	19.812	0.16	0.17	1.34	84	1.98	1.14	84	1.2	88	0.050	100	100	1.8	-0.1	506	277	563	326	397	414	853	251	74	74	74	71	73	-0.023	5.71	0.38
122	20.031	19.976	0.16	0.16	1.34	84	1.98	1.14	84	1.2	87	0.050	100	100	1.8	0	504	277	559	326	398	413	847	250	74	74	74	71	73	-0.023	5.6	0.39
123	20.196	20.140	0.17	0.16	1.34	84	1.99	1.14	84	1.2	87	0.050	100	100	1.8	0	503	277	555	327	397	412	843	249	74	73	74	71	72	-0.023	5.52	0.42
124	20.361	20.304	0.16	0.16	1.34	84	1.99	1.14	84	1.2	86	0.050	100	100	1.8	0	502	278	551	327	397	411	839	248	74	73	74	71	72	-0.022	5.39	0.43
125	20.526	20.468	0.16	0.16	1.35	84	1.98	1.14	84	1.2	86	0.050	100	100	1.8	0	500	278	547	327	397	410	835	246	74	73	74	71	73	-0.022	5.33	0.45
126	20.692	20.632	0.17	0.16	1.34	84	1.98	1.15	84	1.2	86	0.050	100	100	1.8	0	500	278	542	327	397	409	832	245	74	73	74	71	72	-0.022	5.35	0.46
127	20.857	20.796	0.16	0.16	1.35	84	1.98	1.15	84	1.2	86	0.050	100	100	1.8	0	499	278	538	327	396	408	831	245	74	73	74	71	72	-0.021	5.29	0.51
128	21.022	20.961	0.16	0.16	1.35	84	1.99	1.14	84	1.2	86	0.050	100	100	1.7	-0.1	497	278	534	327	396	406	832	244	74	73	74	71	73	-0.021	5.26	0.54
129	21.188	21.125	0.17	0.16	1.35	84	1.99	1.14	84	1.2	85	0.050	100	100	1.7	0	495	278	531	327	395	405	825	244	74	73	74	71	73	-0.022	5.2	0.51
130	21.353	21.289	0.17	0.16	1.35	84	1.98	1.14	84	1.2	85	0.050	100	100	1.7	0	494	278	527	327	395	404	821	242	74	73	74	70	73	-0.021	5.18	0.53
131	21.518	21.453	0.16	0.16	1.35	84	1.99	1.14	84	1.2	85	0.050	100	100	1.7	0	492	278	523	327	394	403	818	242	74	73	74	70	72	-0.021	5.13	0.55
132	21.683	21.617	0.16	0.16	1.35	84	1.98	1.14	84	1.2	85	0.050	100	100	1.7	0	489	278	520	327	394	402	814	241	74	73	74	70	72	-0.021	4.98	0.56
133	21.849	21.782	0.17	0.16	1.35	84	1.98	1.14	84	1.2	85	0.050	100	100	1.7	0	487	279	516	327	393	400	811	239	74	73	73	70	72	-0.021	4.94	0.57
134	22.014	21.946	0.16	0.16	1.35	84	1.99	1.15	84	1.2	85	0.050	100	100	1.7	0	486	279	512	327	392	399	808	239	74	73	73	70	72	-0.020	4.91	0.59
135	22.179	22.111	0.16	0.16	1.35	84	1.98	1.14	84	1.2	84	0.050	99	100	1.6	-0.1	485	279	510	326	391	398	803	238	74	73	73	70	72	-0.021	4.88	0.6
136	22.345	22.275	0.17	0.16	1.35	84	1.99	1.14	84	1.2	84	0.050	100	99	1.6	0	483	279	506	326	391	397	798	237	73	73	73	70	72	-0.020	4.8	0.59
137	22.510	22.439	0.17	0.16	1.35	84	1.99	1.14	84	1.2	84	0.050	99	99	1.6	0	483	279	503	326	390	396	794	236	73	73	73	70	72	-0.021	4.65	0.6
138	22.675	22.603	0.16	0.16	1.35	84	1.99	1.14	84	1.2	84	0.050	99	99	1.6	0	481	279	499	326	389	395	788	235	73	73	73	70	71	-0.019	4.6	0.6
139	22.841	22.767	0.17	0.16	1.35	84	1.98	1.15	84	1.2	84	0.050	100	99	1.6	0	479	278	497	326	388	394	781	236	73	73	73	70	71	-0.021	4.6	0.61
140	23.007	22.932	0.17	0.16	1.35	84	1.99	1.15	84	1.2	84	0.050	100	100	1.6	0	478	278	493	326	387	392	775	234	73	73	73	70	71	-0.021	4.54	0.6
141	23.172	23.097	0.16	0.17	1.35	84	1.99	1.15	84	1.2	84	0.050	99	100	1.6	0	476	278	490	325	386	391	769	233	73	73	73	70	72	-0.020	4.47	0.6
142	23.338	23.262	0.17	0.16	1.35	84	1.98	1.15	84	1.2	83	0.050	100	100	1.6	0	475	278	487	325	385	390	763	232	73	72	73	70	71	-0.019	4.38	0.59
143	23.504	23.425	0.17	0.16	1.35	84	1.98	1.14	84	1.2	84	0.050	100	99	1.6	0	473	278	484	324	384	389	759	231	73	72	73	70	71	-0.020	4.44	0.61
144	23.669	23.589	0.16	0.16	1.35	84	1.98	1.14	84	1.2	83	0.050	99	99	1.5	-0.1	471	277	481	324	383	387	754	231	73	72	73	70	71	-0.019	4.39	0.6
145	23.835	23.754	0.17	0.17	1.35	83	1.98	1.15	84	1.2	84	0.050	100	100	1.5	0	469	277	477	324	382	386	748	229	73	72	73	70	71	-0.019	4.31	0.6
146	24.000	23.918	0.16	0.16	1.35	83	1.98	1.15	84	1.2	83	0.050	100	99	1.5	0	467	277	474	324	381	385	742	229	73	72	73	69	71	-0.020	4.26	0.6
147	24.165	24.082	0.16	0.16	1.35	83	1.99	1.15	84	1.2	83	0.050	100	99	1.5	0	466	277	471	323	379	383	737	227	73	72	73	69	71	-0.020	4.2	0.59

Wood Heater Test Data - ASTM E2780 / ASTM E2515

Run: 2

Manufacturer: Hearth & Home
Model: Intrepiod IV Catalytic
Tracking No.: 2264
Project No.: 0135WS038E
Test Date: 04-Jan-18
Beginning Clock Time: 11:53

Total Sampling Time: 266 min
Recording Interval: 1 min
Background Sample Volume: _____ cubic feet

Meter Box Y Factor: 0.981 (1) 0.984 (2) _____ (Amb)

Barometric Pressure:	Begin	Middle	End	Average
	30.10	30.06	30.08	30.08 "Hg

OMNI Equipment Numbers: _____

PM Control Modules: 0035, 0036
Dilution Tunnel MW(dry): 29.00 lb/lb-mole
Dilution Tunnel MW(wet): 28.78 lb/lb-mole
Dilution Tunnel H2O: 2.00 percent
Dilution Tunnel Static: -0.180 "H2O
Tunnel Area: 0.19635 ft2
Pitot Tube Cp: 0.99

Avg. Tunnel Velocity: 13.21 ft/sec.
Initial Tunnel Flow: 145.5 scfm
Average Tunnel Flow: 148.4 scfm
Post-Test Leak Check (1): 0.000 cfm @ 7 in. Hg
Post-Test Leak Check (2): 0.000 cfm @ 5 in. Hg
Average Test Piece Fuel Moisture: 20.18 Dry Basis %

Technician Signature: _____

Velocity Traverse Data	Pt.1	Pt.2	Pt.3	Pt.4	Pt.5	Pt.6	Pt.7	Pt.8	Center	
Initial dP	0.026	0.046	0.048	0.034	0.028	0.042	0.044	0.034	0.050	"H2O
Temp:	88	88	88	88	88	88	88	88	88	°F

V_{strav} 13.24 ft/sec V_{scent} 15.06 ft/sec F_p 0.879

	Particulate Sampling Data														Fuel Weight (lb)		Temperature Data (°F)												Stack Gas Data		
Elapsed Time (min)	Gas Meter 1 (ft^3)	Gas Meter 2 (ft^3)	Sample Rate 1 (cfm)	Sample Rate 2 (cfm)	Orifice dH 1 ("H_2O)	Meter 1 Temp (°F)	Meter 1 Vacuum ("Hg)	Orifice dH 2 ("H_2O)	Meter 2 Temp (°F)	Meter 2 Vacuum ("Hg)	Dilution Tunnel (°F)	Dilution Tunnel Center dP	Pro. Rate 1	Pro. Rate 2	Scale Reading	Weight Change	Firebox Top	Firebox Bottom	Firebox Back	Firebox Left	Firebox Right	Avg. Stove Surface	Catalyst Exit	Stack	Filter 1	Dryer Exit 1	Filter 2	Dryer Exit 2	Ambient	Draft ("H_2O)	CO_2 (%)	CO (%)
148	24.331	24.247	0.17	0.16	1.35	83	1.99	1.15	84	1.2	83	0.050	100	100	1.5	0	463	276	468	323	378	382	731	227	73	72	72	69	71	-0.019	4.18	0.59
149	24.496	24.412	0.16	0.16	1.36	83	1.99	1.15	84	1.2	83	0.050	100	100	1.5	0	461	276	465	322	378	380	725	226	73	72	72	69	71	-0.019	4.17	0.6
150	24.662	24.576	0.17	0.16	1.35	83	1.98	1.14	84	1.2	83	0.050	100	99	1.5	0	459	275	463	322	376	379	718	225	73	72	72	69	71	-0.019	4.09	0.58
151	24.829	24.741	0.17	0.16	1.35	83	1.98	1.14	84	1.2	82	0.050	101	100	1.5	0	457	275	459	321	375	377	711	224	73	72	72	69	71	-0.019	4.02	0.57
152	24.993	24.904	0.16	0.16	1.34	83	1.98	1.15	84	1.2	82	0.050	99	99	1.5	0	456	275	457	321	374	377	706	223	73	72	72	69	71	-0.018	3.93	0.57
153	25.158	25.069	0.17	0.16	1.34	83	1.99	1.15	83	1.2	82	0.050	99	100	1.5	0	453	274	454	320	373	375	701	222	72	72	72	69	71	-0.018	3.92	0.57
154	25.324	25.233	0.17	0.16	1.34	83	1.99	1.15	83	1.2	82	0.050	100	99	1.4	-0.1	453	274	451	320	372	374	696	221	72	72	72	69	71	-0.019	3.88	0.56
155	25.489	25.398	0.16	0.16	1.35	83	1.98	1.14	83	1.2	82	0.050	99	100	1.4	0	451	273	448	319	371	372	692	220	72	72	72	69	70	-0.018	3.9	0.57
156	25.654	25.562	0.16	0.16	1.35	83	1.99	1.15	83	1.2	82	0.050	99	99	1.4	0	449	272	445	319	369	371	688	219	72	72	72	69	71	-0.018	3.86	0.57
157	25.820	25.726	0.17	0.16	1.35	83	1.99	1.14	83	1.2	82	0.050	100	99	1.4	0	447	272	443	318	368	370	684	217	72	71	72	69	70	-0.017	3.86	0.58
158	25.985	25.890	0.16	0.16	1.35	83	1.99	1.15	83	1.2	81	0.050	99	99	1.4	0	446	271	440	318	367	368	679	216	72	71	72	69	71	-0.017	3.73	0.55
159	26.151	26.055	0.17	0.16	1.35	83	1.98	1.14	83	1.2	81	0.050	100	100	1.4	0	444	270	437	317	366	367	675	215	72	71	72	69	70	-0.017	3.78	0.57
160	26.316	26.219	0.16	0.16	1.35	83	1.99	1.15	83	1.2	81	0.050	99	99	1.4	0	444	270	434	316	365	366	671	215	72	71	72	69	70	-0.017	3.8	0.58
161	26.482	26.384	0.17	0.16	1.35	83	1.98	1.15	83	1.2	81	0.050	100	100	1.4	0	442	269	432	316	364	365	668	213	72	71	72	69	70	-0.017	3.73	0.57
162	26.648	26.549	0.17	0.16	1.36	83	1.98	1.15	83	1.2	81	0.050	100	100	1.4	0	440	268	429	315	363	363	665	213	72	71	72	69	70	-0.017	3.72	0.58
163	26.813	26.713	0.16	0.16	1.36	83	1.98	1.14	83	1.2	81	0.050	99	99	1.4	0	438	268	426	315	361	362	661	213	72	71	72	68	70	-0.016	3.62	0.57
164	26.979	26.877	0.17	0.16	1.36	83	1.98	1.14	83	1.2	81	0.050	100	99	1.4	0	436	267	424	314	360	360	658	212	72	71	72	68	71	-0.017	3.62	0.58
165	27.144	27.041	0.16	0.16	1.36	83	1.99	1.15	83	1.2	80	0.050	99	99	1.3	-0.1	434	266	421	313	359	359	654	211	72	71	72	68	71	-0.017	3.59	0.57
166	27.310	27.206	0.17	0.16	1.36	83	1.98	1.15	83	1.2	81	0.050	100	100	1.3	0	431	266	419	313	358	357	650	212	72	71	72	68	70	-0.016	3.63	0.58
167	27.475	27.370	0.17	0.16	1.36	83	1.99	1.15	83	1.2	80	0.050	99	99	1.3	0	429	265	416	312	356	356	647	210	72	71	71	68	71	-0.016	3.57	0.58
168	27.641	27.534	0.17	0.16	1.36	83	1.98	1.15	83	1.2	80	0.050	100	99	1.3	0	427	264	414	312	355	354	643	209	72	71	71	68	70	-0.016	3.53	0.57
169	27.806	27.700	0.17	0.17	1.36	83	1.98	1.14	83	1.2	80	0.050	99	100	1.3	0	424	263	412	311	354	353	639	208	72	71	71	68	70	-0.015	3.43	0.55
170	27.972	27.864	0.17	0.16	1.36	83	1.99	1.14	83	1.2	80	0.050	100	99	1.3	0	422	263	409	310	353	351	639	208	72	71	71	68	70	-0.016	3.4	0.58
171	28.138	28.028	0.17	0.16	1.36	82	1.98	1.14	83	1.2	80	0.050	100	99	1.3	0	419	262	407	310	352	350	637	207	71	71	71	68	70	-0.016	3.38	0.58
172	28.303	28.192	0.16	0.16	1.36	83	1.99	1.14	83	1.2	80	0.050	99	99	1.3	0	416	261	405	309	350	348	635	207	71	70	71	68	70	-0.016	3.41	0.59
173	28.469	28.356	0.17	0.16	1.36	82	1.98	1.15	83	1.2	80	0.050	100	99	1.3	0	413	260	403	308	349	347	637	205	71	70	71	68	70	-0.015	3.38	0.58
174	28.634	28.521	0.16	0.16	1.36	82	1.98	1.15	83	1.2	80	0.050	99	100	1.3	0	421	259	401	307	348	347	652	205	71	70	71	68	70	-0.014	6.68	0.48
175	28.800	28.685	0.17	0.16	1.36	82	1.99	1.15	83	1.2	80	0.050	100	99	1.2	-0.1	431	259	399	307	347	349	653	204	71	70	71	68	70	-0.014	6.74	0.45
176	28.965	28.850	0.16	0.17	1.36	82	1.99	1.15	82	1.2	80	0.050	99	100	1.2	0	438	258	398	307	346	349	656	205	71	70	71	68	70	-0.014	6.43	0.46
177	29.131	29.014	0.17	0.16	1.36	82	1.98	1.15	83	1.2	79	0.050	100	99	1.2	0	441	257	396	306	344	349	662	203	71	70	71	68	70	-0.014	6.23	0.48
178	29.297	29.178	0.17	0.16	1.36	82	1.98	1.14	82	1.2	79	0.050	100	99	1.2	0	444	257	395	306	344	349	665	204	71	70	71	68	70	-0.014	6.06	0.48
179	29.462	29.343	0.16	0.16	1.36	82	1.98	1.14	82	1.2	79	0.050	99	100	1.2	0	445	256	395	306	342	349	669	204	71	70	71	68	69	-0.014	5.98	0.5
180	29.628	29.507	0.17	0.16	1.36	82	1.98	1.15	82	1.2	79	0.050	100	99	1.2	0	444	256	394	305	342	348	672	204	71	70	71	68	70	-0.015	5.9	0.52
181	29.794	29.671	0.17	0.16	1.36	82	1.99	1.15	82	1.2	80	0.050	100	99	1.1	-0.1	443	256	393	305	341	348	675	205	71	70	71	68	70	-0.014	5.88	0.54
182	29.960	29.836	0.17	0.16	1.36	82	1.98	1.14	82	1.2	79	0.050	100	100	1.1	0	442	255	393	305	340	347	674	205	71	70	71	67	69	-0.015	5.65	0.54
183	30.125	30.001	0.16	0.17	1.36	82	1.99	1.15	82	1.2	79	0.050	99	100	1.1	0	441	255	392	305	339	346	673	205	71	70	71	67	70	-0.015	5.62	0.55
184	30.291	30.165	0.17	0.16	1.36	82	1.99	1.15	82	1.2	79	0.050	100	99	1.1	0	440	255	392	305	338	346	674	203	71	70	71	67	70	-0.015	5.61	0.55

Wood Heater Test Data - ASTM E2780 / ASTM E2515

Run: 2

Manufacturer: Hearth & Home
Model: Intrepiod IV Catalytic
Tracking No.: 2264
Project No.: 0135WS038E
Test Date: 04-Jan-18
Beginning Clock Time: 11:53

Total Sampling Time: 266 min
Recording Interval: 1 min
Background Sample Volume: _____ cubic feet

Meter Box Y Factor: 0.981 (1) 0.984 (2) _____ (Amb)

Barometric Pressure:	Begin	Middle	End	Average
	30.10	30.06	30.08	30.08 "Hg

OMNI Equipment Numbers: _____

PM Control Modules: 0035, 0036
Dilution Tunnel MW(dry): 29.00 lb/lb-mole
Dilution Tunnel MW(wet): 28.78 lb/lb-mole
Dilution Tunnel H2O: 2.00 percent
Dilution Tunnel Static: -0.180 "H2O
Tunnel Area: 0.19635 ft2
Pitot Tube Cp: 0.99

Avg. Tunnel Velocity: 13.21 ft/sec.
Initial Tunnel Flow: 145.5 scfm
Average Tunnel Flow: 148.4 scfm
Post-Test Leak Check (1): 0.000 cfm @ 7 in. Hg
Post-Test Leak Check (2): 0.000 cfm @ 5 in. Hg
Average Test Piece Fuel Moisture: 20.18 Dry Basis %

Technician Signature: _____

Velocity Traverse Data	Pt.1	Pt.2	Pt.3	Pt.4	Pt.5	Pt.6	Pt.7	Pt.8	Center	
Initial dP	0.026	0.046	0.048	0.034	0.028	0.042	0.044	0.034	0.050	"H2O
Temp:	88	88	88	88	88	88	88	88	88	°F

V_{strav} 13.24 ft/sec V_{scent} 15.06 ft/sec F_p 0.879

	Particulate Sampling Data														Fuel Weight (lb)		Temperature Data (°F)												Stack Gas Data		
Elapsed Time (min)	Gas Meter 1 (ft^3)	Gas Meter 2 (ft^3)	Sample Rate 1 (cfm)	Sample Rate 2 (cfm)	Orifice dH 1 ("H_2O)	Meter 1 Temp (°F)	Meter 1 Vacuum ("Hg)	Orifice dH 2 ("H_2O)	Meter 2 Temp (°F)	Meter 2 Vacuum ("Hg)	Dilution Tunnel (°F)	Dilution Tunnel Center dP	Pro. Rate 1	Pro. Rate 2	Scale Reading	Weight Change	Firebox Top	Firebox Bottom	Firebox Back	Firebox Left	Firebox Right	Avg. Stove Surface	Catalyst Exit	Stack	Filter 1	Dryer Exit 1	Filter 2	Dryer Exit 2	Ambient	Draft ("H_2O)	CO_2 (%)	CO (%)
185	30.456	30.329	0.16	0.16	1.36	82	1.99	1.14	82	1.2	79	0.050	99	99	1.1	0	439	255	392	305	338	346	667	204	71	70	71	67	69	-0.014	5.8	0.46
186	30.622	30.493	0.17	0.16	1.36	82	1.98	1.14	82	1.2	79	0.050	100	99	1.1	0	439	255	391	305	337	345	661	203	71	70	71	67	70	-0.015	5.83	0.43
187	30.787	30.657	0.16	0.16	1.35	82	1.98	1.14	82	1.2	79	0.050	99	99	1.0	-0.1	440	255	391	305	336	345	659	203	71	70	70	67	70	-0.014	5.62	0.43
188	30.953	30.822	0.17	0.16	1.35	82	1.99	1.15	82	1.2	79	0.050	100	100	1.0	0	440	255	390	305	336	345	658	203	71	70	70	67	69	-0.014	5.64	0.45
189	31.118	30.986	0.16	0.16	1.35	82	1.98	1.15	82	1.2	79	0.050	99	99	1.0	0	439	255	390	305	335	345	659	203	71	70	70	67	69	-0.013	5.48	0.47
190	31.284	31.151	0.17	0.16	1.36	82	1.99	1.15	82	1.2	79	0.050	100	100	1.0	0	439	256	389	305	335	345	660	202	71	70	70	67	70	-0.014	5.42	0.5
191	31.449	31.315	0.17	0.16	1.36	82	1.98	1.14	82	1.2	79	0.050	99	99	1.0	0	438	256	389	306	335	345	659	203	71	70	70	67	70	-0.015	5.29	0.51
192	31.615	31.479	0.17	0.16	1.35	82	1.98	1.14	82	1.2	79	0.050	100	99	1.0	0	438	256	388	305	334	344	660	201	70	69	70	67	69	-0.014	5.18	0.52
193	31.781	31.643	0.17	0.16	1.35	82	1.98	1.14	82	1.2	78	0.050	100	99	1.0	0	438	256	388	305	334	344	658	202	70	69	70	67	70	-0.015	5.16	0.54
194	31.946	31.808	0.17	0.16	1.35	82	1.98	1.15	82	1.2	78	0.050	99	100	0.9	-0.1	437	257	387	305	333	344	657	202	70	69	70	67	69	-0.014	5.03	0.54
195	32.111	31.972	0.16	0.16	1.35	82	1.99	1.15	82	1.2	78	0.050	99	99	0.9	0	437	257	387	305	333	344	656	202	70	69	70	67	69	-0.014	5	0.55
196	32.277	32.137	0.17	0.16	1.35	82	1.99	1.14	82	1.2	78	0.050	100	100	0.9	0	437	257	386	305	333	344	656	202	70	69	70	67	69	-0.014	5.04	0.57
197	32.442	32.302	0.16	0.16	1.36	81	1.98	1.15	82	1.2	78	0.050	99	100	0.9	0	436	258	386	305	332	343	655	201	70	69	70	67	69	-0.014	4.87	0.57
198	32.608	32.466	0.17	0.16	1.35	81	1.99	1.14	82	1.2	78	0.050	100	99	0.9	0	436	258	385	305	332	343	653	201	70	69	70	67	70	-0.014	4.82	0.58
199	32.774	32.630	0.17	0.16	1.36	81	1.98	1.15	82	1.2	78	0.050	100	99	0.9	0	435	259	384	305	332	343	652	200	70	69	70	67	69	-0.014	4.83	0.59
200	32.939	32.794	0.16	0.16	1.36	81	1.99	1.15	81	1.2	78	0.050	99	99	0.9	0	434	259	383	304	331	342	653	200	70	69	70	67	69	-0.014	4.95	0.6
201	33.105	32.959	0.17	0.17	1.36	81	1.99	1.15	81	1.2	78	0.050	100	100	0.9	0	432	260	382	304	331	342	651	200	70	69	70	67	68	-0.014	5.15	0.56
202	33.270	33.123	0.17	0.16	1.36	81	1.98	1.15	81	1.2	78	0.050	99	99	0.9	0	430	260	382	304	331	341	650	200	70	69	70	67	70	-0.014	5.12	0.55
203	33.436	33.288	0.17	0.16	1.36	81	1.98	1.15	81	1.2	78	0.050	100	100	0.8	-0.1	429	261	381	304	331	341	649	200	70	69	70	67	70	-0.014	5.04	0.54
204	33.602	33.452	0.17	0.16	1.36	81	1.98	1.15	81	1.2	78	0.050	100	99	0.8	0	427	261	381	303	330	340	647	199	70	69	70	67	69	-0.014	4.95	0.53
205	33.767	33.617	0.17	0.16	1.36	81	1.99	1.14	81	1.2	78	0.050	99	100	0.8	0	426	262	380	303	330	340	645	198	70	69	70	67	69	-0.014	4.83	0.53
206	33.933	33.781	0.17	0.16	1.36	81	1.98	1.15	81	1.2	78	0.050	100	99	0.8	0	425	262	379	302	329	339	640	198	70	69	70	67	69	-0.013	4.84	0.53
207	34.098	33.945	0.16	0.16	1.36	81	1.99	1.15	81	1.2	78	0.050	99	99	0.8	0	425	263	378	302	329	339	637	198	70	69	70	67	68	-0.014	4.8	0.54
208	34.264	34.109	0.17	0.16	1.36	81	1.98	1.15	81	1.2	78	0.050	100	99	0.8	0	424	263	378	302	329	339	635	197	70	69	70	67	68	-0.014	4.72	0.55
209	34.429	34.274	0.16	0.16	1.36	81	1.97	1.15	81	1.2	77	0.050	99	100	0.8	0	423	263	377	301	328	338	633	198	70	69	70	66	69	-0.014	4.69	0.57
210	34.595	34.439	0.17	0.16	1.36	81	1.98	1.14	81	1.2	77	0.050	100	100	0.8	0	423	264	376	301	328	338	631	197	70	69	70	66	69	-0.015	4.59	0.57
211	34.761	34.603	0.17	0.16	1.36	81	1.98	1.15	81	1.2	77	0.050	100	99	0.7	-0.1	422	264	375	300	327	338	629	197	70	69	69	66	69	-0.014	4.54	0.57
212	34.926	34.767	0.16	0.16	1.36	81	1.98	1.15	81	1.2	77	0.050	99	99	0.7	0	421	264	374	300	327	337	628	196	70	69	69	66	68	-0.013	4.44	0.58
213	35.092	34.931	0.17	0.16	1.36	81	1.98	1.15	81	1.2	78	0.050	100	99	0.7	0	421	265	373	300	327	337	627	196	69	69	69	66	69	-0.014	4.45	0.6
214	35.257	35.095	0.16	0.16	1.36	81	1.98	1.15	81	1.2	78	0.050	99	99	0.7	0	420	265	372	299	326	336	627	196	70	69	69	66	69	-0.013	4.38	0.62
215	35.423	35.260	0.17	0.16	1.36	81	1.99	1.15	81	1.1	78	0.050	100	100	0.7	0	418	265	372	299	326	336	626	197	69	68	69	66	69	-0.013	4.44	0.64
216	35.588	35.424	0.16	0.16	1.36	81	1.98	1.15	81	1.1	78	0.050	99	99	0.7	0	417	266	370	299	325	335	627	196	69	68	69	66	70	-0.012	4.36	0.66
217	35.754	35.589	0.17	0.16	1.36	81	1.98	1.14	81	1.2	78	0.050	100	100	0.7	0	415	266	369	299	325	335	625	196	69	68	69	66	69	-0.013	4.46	0.65
218	35.919	35.753	0.16	0.16	1.36	81	1.98	1.14	81	1.2	78	0.050	99	99	0.7	0	414	266	368	299	324	334	622	197	69	68	69	66	69	-0.012	4.5	0.64
219	36.085	35.917	0.17	0.16	1.36	81	1.99	1.14	81	1.2	78	0.050	100	99	0.7	0	414	266	367	298	323	334	616	196	69	68	69	66	70	-0.012	5.11	0.6
220	36.251	36.081	0.17	0.16	1.36	81	1.99	1.15	81	1.1	79	0.050	100	100	0.6	-0.1	417	266	367	298	323	334	612	195	70	68	70	66	70	-0.011	5.28	0.54
221	36.416	36.245	0.16	0.16	1.36	80	1.98	1.15	81	1.2	79	0.050	100	100	0.6	0	423	266	366	297	323	335	609	194	70	68	70	66	70	-0.011	5.33	0.52

Wood Heater Test Data - ASTM E2780 / ASTM E2515

Run: 2

Manufacturer: Hearth & Home
Model: Intrepiod IV Catalytic
Tracking No.: 2264
Project No.: 0135WS038E
Test Date: 04-Jan-18
Beginning Clock Time: 11:53

Total Sampling Time: 266 min
Recording Interval: 1 min
Background Sample Volume: _____ cubic feet

Meter Box Y Factor: 0.981 (1) 0.984 (2) _____ (Amb)

Barometric Pressure:	Begin	Middle	End	Average
	30.10	30.06	30.08	30.08 "Hg

OMNI Equipment Numbers: _____

PM Control Modules: 0035, 0036
Dilution Tunnel MW(dry): 29.00 lb/lb-mole
Dilution Tunnel MW(wet): 28.78 lb/lb-mole
Dilution Tunnel H2O: 2.00 percent
Dilution Tunnel Static: -0.180 "H2O
Tunnel Area: 0.19635 ft2
Pitot Tube Cp: 0.99

Avg. Tunnel Velocity: 13.21 ft/sec.
Initial Tunnel Flow: 145.5 scfm
Average Tunnel Flow: 148.4 scfm
Post-Test Leak Check (1): 0.000 cfm @ 7 in. Hg
Post-Test Leak Check (2): 0.000 cfm @ 5 in. Hg
Average Test Piece Fuel Moisture: 20.18 Dry Basis %

Technician Signature: _____

Velocity Traverse Data	Pt.1	Pt.2	Pt.3	Pt.4	Pt.5	Pt.6	Pt.7	Pt.8	Center	
Initial dP	0.026	0.046	0.048	0.034	0.028	0.042	0.044	0.034	0.050	"H2O
Temp:	88	88	88	88	88	88	88	88	88	°F

V_{strav} 13.24 ft/sec V_{scent} 15.06 ft/sec F_p 0.879

	Particulate Sampling Data														Fuel Weight (lb)		Temperature Data (°F)												Stack Gas Data		
Elapsed Time (min)	Gas Meter 1 (ft^3)	Gas Meter 2 (ft^3)	Sample Rate 1 (cfm)	Sample Rate 2 (cfm)	Orifice dH 1 ("H_2O)	Meter 1 Temp (°F)	Meter 1 Vacuum ("Hg)	Orifice dH 2 ("H_2O)	Meter 2 Temp (°F)	Meter 2 Vacuum ("Hg)	Dilution Tunnel (°F)	Dilution Tunnel Center dP	Pro. Rate 1	Pro. Rate 2	Scale Reading	Weight Change	Firebox Top	Firebox Bottom	Firebox Back	Firebox Left	Firebox Right	Avg. Stove Surface	Catalyst Exit	Stack	Filter 1	Dryer Exit 1	Filter 2	Dryer Exit 2	Ambient	Draft ("H_2O)	CO_2 (%)	CO (%)
222	36.582	36.409	0.17	0.16	1.35	80	1.98	1.15	81	1.2	79	0.050	100	100	0.6	0	424	266	365	297	322	335	615	194	70	68	70	66	70	-0.011	5.5	0.54
223	36.747	36.574	0.16	0.16	1.35	80	1.98	1.14	81	1.2	79	0.050	100	100	0.6	0	424	266	364	297	322	335	623	194	70	68	70	66	70	-0.011	5.22	0.6
224	36.913	36.738	0.17	0.16	1.34	80	1.98	1.15	81	1.2	79	0.050	100	100	0.6	0	424	267	363	297	321	334	630	195	70	68	70	66	70	-0.011	5.22	0.66
225	37.078	36.902	0.17	0.16	1.36	80	1.98	1.14	81	1.2	79	0.050	100	100	0.6	0	424	267	363	296	321	334	633	195	70	68	70	66	70	-0.011	5.2	0.67
226	37.243	37.066	0.16	0.16	1.36	80	1.98	1.14	81	1.2	79	0.050	100	100	0.6	0	424	267	362	296	320	334	633	195	70	68	70	66	70	-0.011	5.05	0.67
227	37.409	37.230	0.17	0.16	1.35	80	1.98	1.15	81	1.2	79	0.050	100	100	0.5	-0.1	423	267	362	296	320	334	634	195	70	68	70	66	70	-0.011	5.02	0.68
228	37.574	37.394	0.16	0.16	1.35	80	1.97	1.15	81	1.2	79	0.050	100	100	0.5	0	422	267	361	296	320	333	632	195	70	68	70	66	70	-0.011	4.87	0.67
229	37.739	37.558	0.16	0.16	1.35	80	1.99	1.15	81	1.2	80	0.050	100	100	0.5	0	422	267	361	296	319	333	632	196	70	68	70	66	70	-0.012	4.93	0.69
230	37.904	37.723	0.17	0.16	1.35	80	1.98	1.14	81	1.2	80	0.050	100	100	0.5	0	423	267	360	295	319	333	632	196	70	68	70	66	70	-0.011	5	0.71
231	38.069	37.887	0.16	0.16	1.35	80	1.98	1.14	81	1.2	80	0.050	100	100	0.5	0	423	267	360	295	319	333	632	195	70	68	70	66	70	-0.012	4.92	0.71
232	38.234	38.050	0.16	0.16	1.35	81	1.98	1.14	81	1.2	80	0.050	100	99	0.5	0	422	267	359	295	318	332	631	195	70	68	70	66	70	-0.012	4.94	0.7
233	38.400	38.214	0.17	0.16	1.36	81	1.97	1.14	81	1.2	80	0.050	100	100	0.5	0	422	267	359	295	318	332	630	196	70	68	70	66	70	-0.011	4.91	0.7
234	38.565	38.378	0.16	0.16	1.35	81	1.98	1.15	81	1.2	80	0.050	100	100	0.5	0	422	267	359	295	317	332	629	195	70	68	70	66	70	-0.011	4.87	0.69
235	38.730	38.542	0.16	0.16	1.35	81	1.98	1.15	81	1.2	80	0.050	100	100	0.4	-0.1	421	267	359	295	317	332	629	195	70	68	70	66	70	-0.011	4.87	0.7
236	38.895	38.707	0.17	0.16	1.35	81	1.98	1.14	81	1.1	80	0.050	100	100	0.4	0	421	267	359	295	316	332	630	195	70	68	70	66	70	-0.012	4.83	0.71
237	39.061	38.871	0.17	0.16	1.36	81	1.98	1.14	81	1.2	80	0.050	100	100	0.4	0	420	267	358	295	316	331	625	195	70	68	70	66	70	-0.012	4.81	0.7
238	39.226	39.035	0.16	0.16	1.36	81	1.98	1.14	81	1.2	80	0.050	100	100	0.4	0	419	267	358	295	315	331	613	195	70	68	70	66	70	-0.011	4.98	0.57
239	39.391	39.199	0.16	0.16	1.36	81	1.98	1.14	81	1.2	80	0.050	100	100	0.4	0	417	267	358	295	315	330	612	193	70	68	70	66	70	-0.011	4.76	0.57
240	39.556	39.362	0.16	0.16	1.36	81	1.98	1.15	81	1.2	80	0.050	100	99	0.4	0	415	267	357	295	314	330	613	193	70	68	70	66	70	-0.011	4.76	0.61
241	39.722	39.527	0.17	0.16	1.36	81	1.98	1.14	81	1.2	80	0.050	100	100	0.4	0	414	267	357	295	314	329	614	193	70	68	70	66	70	-0.011	4.69	0.63
242	39.887	39.691	0.16	0.16	1.36	81	1.98	1.15	81	1.2	80	0.050	100	100	0.4	0	411	268	356	295	313	329	615	193	70	68	70	66	70	-0.011	4.65	0.65
243	40.052	39.855	0.16	0.16	1.36	81	1.98	1.14	81	1.2	80	0.050	100	100	0.3	-0.1	409	268	356	295	312	328	616	193	70	68	70	66	70	-0.011	4.65	0.67
244	40.217	40.019	0.16	0.16	1.36	81	1.98	1.14	81	1.2	80	0.050	100	100	0.3	0	407	268	356	295	311	327	618	193	70	68	70	66	70	-0.011	4.61	0.7
245	40.383	40.183	0.17	0.16	1.36	81	1.98	1.14	81	1.2	80	0.050	100	100	0.3	0	406	268	356	295	311	327	619	193	71	68	70	66	70	-0.011	4.51	0.69
246	40.548	40.347	0.16	0.16	1.36	81	1.99	1.14	81	1.2	80	0.050	100	100	0.3	0	404	268	355	295	310	326	617	193	71	68	70	66	70	-0.011	4.52	0.7
247	40.714	40.511	0.17	0.16	1.36	81	1.98	1.15	81	1.2	80	0.050	100	100	0.3	0	401	269	355	295	309	326	618	193	71	68	71	66	71	-0.011	4.37	0.7
248	40.879	40.675	0.16	0.16	1.36	81	1.98	1.15	81	1.2	80	0.050	100	100	0.3	0	400	269	354	295	309	325	619	193	71	68	71	66	70	-0.011	4.41	0.74
249	41.045	40.840	0.17	0.17	1.35	81	1.98	1.15	81	1.2	80	0.050	100	100	0.3	0	399	269	354	295	308	325	617	193	71	68	71	66	70	-0.011	4.34	0.74
250	41.210	41.003	0.16	0.16	1.36	81	1.98	1.13	81	1.2	80	0.050	100	99	0.3	0	398	269	353	295	307	324	621	192	71	68	71	66	70	-0.011	4.29	0.77
251	41.375	41.167	0.16	0.16	1.36	81	1.99	1.15	81	1.2	80	0.050	100	100	0.3	0	398	269	353	295	306	324	621	192	71	68	71	66	70	-0.011	4.34	0.78
252	41.541	41.331	0.17	0.16	1.36	81	1.98	1.14	81	1.2	80	0.050	100	100	0.2	-0.1	396	269	353	295	305	324	620	192	71	68	71	66	71	-0.011	4.33	0.77
253	41.706	41.495	0.17	0.16	1.36	81	1.99	1.15	81	1.2	80	0.050	100	100	0.2	0	395	269	353	295	305	323	618	192	71	68	71	66	70	-0.011	4.11	0.78
254	41.871	41.659	0.16	0.16	1.36	81	1.99	1.14	81	1.2	80	0.050	100	100	0.2	0	393	269	352	295	304	323	612	192	71	68	71	66	71	-0.011	4.06	0.75
255	42.036	41.824	0.16	0.16	1.35	81	1.98	1.14	81	1.2	80	0.050	100	100	0.2	0	391	269	352	295	303	322	610	191	71	68	71	66	70	-0.010	3.94	0.76
256	42.202	41.987	0.17	0.16	1.36	81	1.98	1.15	81	1.2	80	0.050	100	99	0.2	0	389	269	351	295	302	321	610	192	71	68	71	66	71	-0.011	3.95	0.8
257	42.367	42.151	0.16	0.16	1.34	81	1.98	1.14	81	1.2	80	0.050	100	100	0.2	0	387	269	350	295	302	321	606	191	71	68	71	66	71	-0.010	4.07	0.72
258	42.532	42.315	0.16	0.16	1.35	81	1.98	1.15	81	1.2	80	0.050	100	100	0.2	0	385	269	350	294	301	320	603	191	71	68	71	66	71	-0.010	4.09	0.73

Wood Heater Test Data - ASTM E2780 / ASTM E2515

Run: 2

Manufacturer: Hearth & Home
Model: Intrepiod IV Catalytic
Tracking No.: 2264
Project No.: 0135WS038E
Test Date: 04-Jan-18
Beginning Clock Time: 11:53

Total Sampling Time: 266 min
Recording Interval: 1 min
Background Sample Volume: _____ cubic feet

Meter Box Y Factor: 0.981 (1) 0.984 (2) _____ (Amb)

Barometric Pressure:	Begin	Middle	End	Average
	30.10	30.06	30.08	30.08 "Hg

OMNI Equipment Numbers: _____

PM Control Modules: 0035, 0036
Dilution Tunnel MW(dry): 29.00 lb/lb-mole
Dilution Tunnel MW(wet): 28.78 lb/lb-mole
Dilution Tunnel H2O: 2.00 percent
Dilution Tunnel Static: -0.180 "H2O
Tunnel Area: 0.19635 ft2
Pitot Tube Cp: 0.99

Avg. Tunnel Velocity: 13.21 ft/sec.
Initial Tunnel Flow: 145.5 scfm
Average Tunnel Flow: 148.4 scfm
Post-Test Leak Check (1): 0.000 cfm @ 7 in. Hg
Post-Test Leak Check (2): 0.000 cfm @ 5 in. Hg
Average Test Piece Fuel Moisture: 20.18 Dry Basis %

Technician Signature: _____

Velocity Traverse Data	Pt.1	Pt.2	Pt.3	Pt.4	Pt.5	Pt.6	Pt.7	Pt.8	Center	
Initial dP	0.026	0.046	0.048	0.034	0.028	0.042	0.044	0.034	0.050	"H2O
Temp:	88	88	88	88	88	88	88	88	88	°F

V_{strav} 13.24 ft/sec V_{scent} 15.06 ft/sec F_p 0.879

	Particulate Sampling Data														Fuel Weight (lb)		Temperature Data (°F)														Stack Gas Data		
Elapsed Time (min)	Gas Meter 1 (ft^3)	Gas Meter 2 (ft^3)	Sample Rate 1 (cfm)	Sample Rate 2 (cfm)	Orifice dH 1 ("H_2O)	Meter 1 Temp (°F)	Meter 1 Vacuum ("Hg)	Orifice dH 2 ("H_2O)	Meter 2 Temp (°F)	Meter 2 Vacuum ("Hg)	Dilution Tunnel (°F)	Dilution Tunnel Center dP	Pro. Rate 1	Pro. Rate 2	Scale Reading	Weight Change	Firebox Top	Firebox Bottom	Firebox Back	Firebox Left	Firebox Right	Avg. Stove Surface	Catalyst Exit	Stack	Filter 1	Dryer Exit 1	Filter 2	Dryer Exit 2	Ambient	Draft ("H_2O)	CO_2 (%)	CO (%)
259	42.697	42.479	0.17	0.16	1.35	81	1.99	1.15	81	1.2	80	0.050	100	100	0.2	0	383	269	349	294	300	319	599	190	71	68	71	66	70	-0.010	3.97	0.7
260	42.862	42.643	0.16	0.16	1.35	81	1.98	1.14	81	1.2	80	0.050	100	100	0.1	-0.1	381	269	349	294	300	319	596	190	71	68	71	66	70	-0.011	3.81	0.7
261	43.028	42.808	0.17	0.16	1.35	81	1.98	1.14	81	1.2	80	0.050	100	100	0.1	0	380	269	348	294	299	318	595	190	71	68	71	66	70	-0.010	3.71	0.7
262	43.193	42.971	0.16	0.16	1.35	81	1.99	1.14	81	1.2	80	0.050	100	99	0.1	0	377	269	347	294	298	317	593	190	71	68	71	66	71	-0.011	3.7	0.7
263	43.358	43.135	0.16	0.16	1.35	81	1.99	1.14	81	1.2	80	0.050	100	100	0.1	0	375	269	346	294	297	316	591	189	71	68	71	66	71	-0.011	3.56	0.71
264	43.523	43.299	0.17	0.16	1.35	81	1.98	1.15	81	1.2	80	0.050	100	100	0.1	0	373	268	346	293	297	315	586	189	71	68	71	66	71	-0.010	3.45	0.69
265	43.689	43.462	0.17	0.16	1.36	81	1.99	1.14	81	1.2	80	0.050	100	99	0.1	0	371	268	345	293	295	314	580	188	71	68	71	66	71	-0.010	3.37	0.67
266	43.854	43.627	0.16	0.16	1.35	81	1.97	1.14	81	1.2	80	0.050	100	100	0.0	-0.1	368	268	344	293	295	314	575	188	71	68	71	66	70	-0.010	3.27	0.67
Avg/Tot	43.854	43.627	0.16	0.16	1.35	81		1.14	82		85	0.050	100	100								107.4				72	72	69	71	-0.022		

Wood Heater Lab Data - ASTM E2780 / ASTM E2515

Manufacturer: Hearth & Home
Model: Intrepiod IV Catalytic
Tracking No.: 2264
Project No.: 0135WS038E
Run #: 2
Date: 1/4/18

Equipment Numbers:

TRAIN 1 (First Hour emissions)

Sample Component	Reagent	Filter, Probe or Dish #	Weights		
			Final, mg	Tare, mg	Particulate, mg
B. Front filter catch	Filter	D336	111.7	111.2	0.5
C. Rear filter catch	Filter				0.0
D. Probe catch*	Probe				0.0
E. Filter seals catch*	Seals				0.0

Sub-Total Total Particulate, mg: 0.5

TRAIN 1 (Post First Hour Change-out)

Sample Component	Reagent	Filter, Probe or Dish #	Weights		
			Final, mg	Tare, mg	Particulate, mg
B. Front filter catch	Filter	D337	111.6	111.6	0.0
C. Rear filter catch	Filter	D338	111.3	111.3	0.0
D. Probe catch*	Probe	28	114751.7	114751.7	0.0
E. Filter seals catch*	Seals	R553	3349.9	3349.5	0.4

Sub-Total Total Particulate, mg: 0.4

Train 1 Aggregate Total Particulate, mg: **0.9**

TRAIN 2

Sample Component	Reagent	Filter, Probe or Dish #	Weights		
			Final, mg	Tare, mg	Particulate, mg
A. Front filter catch	Filter	D339	112.7	111.9	0.8
B. Rear filter catch	Filter	D340	111.6	111.7	-0.1
C. Probe catch*	Probe	29	114278.6	114278.7	0.0
D. Filter seals catch*	Seals	R554	3267.3	3267.0	0.3

Total Particulate, mg: **1.0**

AMBIENT

Sample Component	Reagent	Filter # or Probe #	Weights		
			Final, mg	Tare, mg	Particulate, mg
A. Front filter catch*	Filter				0.0

Total Particulate, mg: **0.0**

*Particulate catch that results in a negative number, is assumed to be zero for probes and seals, negative numbers for filters are assumed to be part of the seal weight.

Component	Equations:
A. Front filter catch	Final (mg) - Tare (mg) = Particulate, mg
B. Rear filter catch	Final (mg) - Tare (mg) = Particulate, mg
C. Probe catch	Final (mg) - Tare (mg) = Particulate, mg

Technician Signature: 

Wood Heater Test Results - ASTM E2780 / ASTM E2515

Manufacturer: Hearth & Home
Model: Intrepiod IV Catalytic
Project No.: 0135WS038E
Tracking No.: 2264
Run: 2
Test Date: 01/04/18

Burn Rate	**0.73 kg/hr dry**
Average Tunnel Temperature	85 degrees Fahrenheit
Average Gas Velocity in Dilution Tunnel - vs	13.21 feet/second
Average Gas Flow Rate in Dilution Tunnel - Qsd	8902.0 dscf/hour
Average Delta p	0.050 inches H20
Total Time of Test	266 minutes

	AMBIENT	SAMPLE TRAIN 1	SAMPLE TRAIN 2	FIRST HOUR FILTER (TRAIN 1)
Total Sample Volume - Vm	0.000 cubic feet	43.854 cubic feet	43.627 cubic feet	9.804 cubic feet
Average Gas Meter Temperature	71 degrees Fahrenheit	81 degrees Fahrenheit	82 degrees Fahrenheit	78 degrees Fahrenheit
Total Sample Volume (Standard Conditions) - Vmstd	0.000 dscf	42.309 dscf	42.176 dscf	9.512 dscf
Total Particulates - m_n	0 mg	0.9 mg	1 mg	0.5 mg
Particulate Concentration (dry-standard) - C_f/C_s	0.000000 grams/dscf	0.00002 grams/dscf	0.00002 grams/dscf	0.00005 grams/dscf
Total Particulate Emissions - E_T	0.00 grams	0.84 grams	0.94 grams	0.47 grams
Particulate Emission Rate	0.00 grams/hour	0.19 grams/hour	0.21 grams/hour	0.47 grams/hour
Emissions Factor		0.26 g/kg	0.29 g/kg	0.31 g/kg
Difference from Average Total Particulate Emissions		0.05 grams	0.05 grams	
	Dual Train Comparison Results Are Acceptable			

FINAL AVERAGE RESULTS

Complete Test Run	
Total Particulate Emissions - E_T	0.89 grams
Particulate Emission Rate	**0.20 grams/hour**
Emissions Factor	0.27 grams/kg
First Hour Emissions	
Total Particulate Emissions - E_T	0.47 grams
Particulate Emission Rate	0.47 grams/hour
Emissions Factor	0.31 grams/kg
7.5% of Average Total Particulate Emissions	0.07 grams

QUALITY CHECKS

Filter Temps < 90 °F	OK
Filter Face Velocity (47 mm)	OK
Dryer Exit Temp < 80F	OK
Leakage Rate	OK
Ambient Temp (55-90°F)	OK
Negative Probe Weight Eval.	OK
Pro-Rate Variation	OK
Stove Surface ΔT	OK
Train Precesion 7.5%	5.42
Train Precision 0.5g/kg	0.03

Technician Signature: 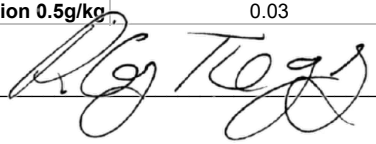

Wood Heater Lab Data - ASTM E2780 / ASTM E2515

Manufacturer:	Hearth & Home	Equipment Numbers:	
Model:	Intrepiod IV Catalytic		
Tracking No.:	2264		
Project No.:	0135WS038E		
Run #:	2		
Date:	1/4/18		

Uncorrected

TRAIN 1 (First Hour emissions)

Sample Component	Reagent	Filter, Probe or Dish #	Weights		
			Final, mg	Tare, mg	Particulate, mg
B. Front filter catch	Filter	D336	111.7	111.2	0.5
C. Rear filter catch	Filter				0.0
D. Probe catch*	Probe				0.0
E. Filter seals catch*	Seals				0.0

Sub-Total	Total Particulate, mg:	0.5

TRAIN 1 (Post First Hour Change-out)

Sample Component	Reagent	Filter, Probe or Dish #	Weights		
			Final, mg	Tare, mg	Particulate, mg
B. Front filter catch	Filter	D337	111.6	111.6	0.0
C. Rear filter catch	Filter	D338	111.3	111.3	0.0
D. Probe catch*	Probe	28	114751.7	114751.7	0.0
E. Filter seals catch*	Seals	R553	3349.9	3349.5	0.4

Sub-Total	Total Particulate, mg:	0.4
Train 1 Aggregate	Total Particulate, mg:	**0.9**

TRAIN 2

Sample Component	Reagent	Filter, Probe or Dish #	Weights		
			Final, mg	Tare, mg	Particulate, mg
A. Front filter catch	Filter	D339	112.7	111.9	0.8
B. Rear filter catch	Filter	D340	111.7	111.7	0.0
C. Probe catch*	Probe	29	114278.6	114278.7	0.0
D. Filter seals catch*	Seals	R554	3267.3	3267.0	0.3

Total Particulate, mg:	**1.1**

AMBIENT

Sample Component	Reagent	Filter # or Probe #	Weights		
			Final, mg	Tare, mg	Particulate, mg
A. Front filter catch*	Filter				0.0

Total Particulate, mg:	**0.0**

*Particulate catch that results in a negative number, is assumed to be zero for probes and seals, negative numbers for filters are assumed to be part of the seal weight.

Component	Equations:
A. Front filter catch	Final (mg) - Tare (mg) = Particulate, mg
B. Rear filter catch	Final (mg) - Tare (mg) = Particulate, mg
C. Probe catch	Final (mg) - Tare (mg) = Particulate, mg

Technician Signature: 

Wood Heater Test Results - ASTM E2780 / ASTM E2515

Manufacturer: Hearth & Home
Model: Intrepiod IV Catalytic
Project No.: 0135WS038E
Tracking No.: 2264
Run: 2
Test Date: 01/04/18

Burn Rate	**0.73 kg/hr dry**
Average Tunnel Temperature	85 degrees Fahrenheit
Average Gas Velocity in Dilution Tunnel - vs	13.21 feet/second
Average Gas Flow Rate in Dilution Tunnel - Qsd	8902.0 dscf/hour
Average Delta p	0.050 inches H20
Total Time of Test	266 minutes

Uncorrected

	AMBIENT	SAMPLE TRAIN 1	SAMPLE TRAIN 2	FIRST HOUR FILTER (TRAIN 1)
Total Sample Volume - Vm	0.000 cubic feet	43.854 cubic feet	43.627 cubic feet	9.804 cubic feet
Average Gas Meter Temperature	71 degrees Fahrenheit	81 degrees Fahrenheit	82 degrees Fahrenheit	78 degrees Fahrenheit
Total Sample Volume (Standard Conditions) - Vmstd	0.000 dscf	42.309 dscf	42.176 dscf	9.512 dscf
Total Particulates - m_n	0 mg	0.9 mg	1.1 mg	0.5 mg
Particulate Concentration (dry-standard) - C_r/C_s	0.000000 grams/dscf	0.00002 grams/dscf	0.00003 grams/dscf	0.00005 grams/dscf
Total Particulate Emissions - E_T	0.00 grams	0.84 grams	1.03 grams	0.47 grams
Particulate Emission Rate	0.00 grams/hour	0.19 grams/hour	0.23 grams/hour	0.47 grams/hour
Emissions Factor		0.26 g/kg	0.32 g/kg	0.31 g/kg
Difference from Average Total Particulate Emissions		0.09 grams	0.09 grams	

Dual Train Comparison Results Are Acceptable

FINAL AVERAGE RESULTS

Complete Test Run	
Total Particulate Emissions - E_T	0.93 grams
Particulate Emission Rate	**0.21 grams/hour**
Emissions Factor	0.29 grams/kg
First Hour Emissions	
Total Particulate Emissions - E_T	0.47 grams
Particulate Emission Rate	0.47 grams/hour
Emissions Factor	0.31 grams/kg
7.5% of Average Total Particulate Emissions	0.07 grams

QUALITY CHECKS

Filter Temps < 90 °F	OK
Filter Face Velocity (47 mm)	OK
Dryer Exit Temp < 80F	OK
Leakage Rate	OK
Ambient Temp (55-90°F)	OK
Negative Probe Weight Eval.	OK
Pro-Rate Variation	OK
Stove Surface ΔT	OK
Train Precesion 7.5%	10.16
Train Precision 0.5g/kg	0.06

Technician Signature:_____

Wood Heater Efficiency Results - CSA B415.1

Manufacturer: Hearth & Home
Model: :repiod IV Catalytic
Date: 01/04/18
Run: 2
Control #: 0135WS038E
Test Duration: 266
Output Category: I

Technician Signature: 

Test Results in Accordance with CSA B415.1-09

	HHV Basis	LHV Basis
Overall Efficiency	78.4%	84.7%
Combustion Efficiency	97.7%	97.7%
Heat Transfer Efficiency	80%	86.7%

Output Rate (kJ/h)	11,243	10,665	**(Btu/h)**
Burn Rate (kg/h)	0.72	1.60	**(lb/h)**
Input (kJ/h)	14,339	13,602	**(Btu/h)**

Test Load Weight (dry kg)	3.21	7.07	**dry lb**
MC wet (%)	16.79147945		
MC dry (%)	20.18		
Particulate (g)	0.20		
CO (g)	124		
Test Duration (h)	4.43		

Emissions	**Particulate**	**CO**
g/MJ Output	0.00	2.50
g/kg Dry Fuel	0.06	38.79
g/h	0.05	28.08
lb/MM Btu Output	0.01	5.80

Air/Fuel Ratio (A/F)	15.64

VERSION: **2.2** **12/14/2009**

OMNI-Test Laboratories, Inc. **ASTM E2780 Wood Heater Run Sheets**

Client: Hearth & Home Project Number: 0135WS038E Run Number: 2

Model: Intrepid IV Catalytic Tracking Number: 2264 Date: 1/4/18

Test Crew: D Davis

OMNI Equipment ID numbers:

ASTM E2515 Lab Sheet

Assembled By:

D Davis

Date/Time in Dessicator:

1/4/18 1645

	Weighing #1	Weighing #2	Weighing #3	Weighing #4	Weighing #5
Date/Time:	1/9/18 0840	1/10/18 0820			
R/H %:	8.9	6.7			
Temp:	71.2	68.9			
200 mg Audit:	0.2000	0.2000			
2 g Audit:	2.0000	1.9999			
100 g Audit:	99.9977	99.9980			
Initials:	JA	JA			

Train	Element	ID #	Tare (mg)	Weight (mg)	Weight (mg)	Weight (mg)	Weight (mg)	Weight (mg)
A (First Hour)	Front Filter	D336	111.2	111.8	111.7			
	Rear Filter							
	Probe							
	O-Ring Set							
A (Remainder)	Front Filter	D337	111.6	111.7	111.6			
	Rear Filter	D338	111.3	111.3	111.3			
	Probe	28	114751.7	114751.8	114751.7			
	O-Ring Set	R553	3349.5	3349.9	3349.9			
B	Front Filter	D339	111.9	112.8	112.7			
	Rear Filter	D340	111.7	111.6	111.6			
	Probe	29	114278.7	114278.5	114278.6			
	O-Ring Set	R554	3267.0	3267.4	3267.3			
BG	Filter							

Technician Signature: D Davis Date: 1/23/18

OMNI-Test Laboratories, Inc.

ASTM E2780 Wood Heater Run Sheets

Client: Hearth & Home Project Number: 0135WS038E Run Number: 2

Model: Intrepid IV Catalytic Tracking Number: 2264 Date: 1/4/18

Test Crew: D Davis

OMNI Equipment ID numbers:

Wood Heater Supplemental Data

Start Time: 11:53 Booth #: E1

Stop Time: 16:19

Stack Gas Leak Check:

Initial: good Final: good

Sample Train Leak Check:

A: 0.0 @ 7 "Hg

B: 0.0 @ 5 "Hg

Calibrations: Span Gas CO_2: 16.74 CO: 4.20 / 901

	Pre Test		Post Test	
	Zero	Span	Zero	Span
Time	1128	1128	16:21	16:21
CO_2	0.00	16.74	0.00	16.73
CO	0.000 / 0	4.200 / 900	0.000 / 0	4.197 / 901

Air Velocity (ft/min): Initial: <50 Final: <50

Scale Audit (lbs): Initial: 10.0 Final: 10.0

Pitot Tube Leak Test: Initial: good Final: good

Stack Diameter (in): 6"

Induced Draft: 00

% Smoke Capture: 100%

Flue Pipe Cleaned Prior to First Test in Series:

Date: 1/2/18 Initials: BD

	Initial	Middle	Ending
P_b (in/Hg)	30.10	30.06	30.08
RH (%)	15.8	15.1	18.9
Ambient (°F)	72	72	70

Tunnel Traverse

Microtector Reading	dP (in H_2O)	T(°F)
1	.026	88
2	.046	88
3	.048	88
4	.034	88
1	.028	88
2	.042	88
3	.044	88
4	.034	88
Center:		
	.050	88

Background Filter Volume: N/A

Tunnel Static Pressure (in H_2O):	
Beginning of Test	End of Test
-.18	-.18

Technician Signature: BD Date: 1/23/18

OMNI-Test Laboratories, Inc. **ASTM E2780 Wood Heater Run Sheets**

Client: Hearth & Home Project Number: 0135WS038E Run Number: 2

Model: Intrepid IV Catalytic Tracking Number: 2264 Date: 1/4/18

Test Crew: B Davis

OMNI Equipment ID numbers:

Wood Heater Fuel Data

Fuel: Douglas fir, untreated and air dried, standard grade or better dimensional lumber

Pre-Burn Fuel

Calibration: Cal Value (1) = 12% Actual Reading 12
Cal Value (2) = 22% Actual Reading 22

Piece:	Length:	Reading:	Piece:	Length:	Reading:
1	32 in	23.8	7	____ in	____
2	32 in	22.2	8	____ in	____
	____ ft	____	____	____	____
3	28 in	22.3	9	____ in	____
4	28 in	22.2	10	____ in	____
5	____ in	____	11	____ in	____
6	____ in	____	12	____ in	____

Total Pre-Burn Fuel Weight: 13.4 Pre-Burn Fuel Average Moisture: 22.63

Time (clock): 0840 Room Temperature (F): 70 Initials: BD

Test Fuel

Firebox Volume (ft^3): 1.31 Test Fuel Piece Length (in): 13.5

Load Weight Range (lb): ~~8.5~~ 8.25 - 9.17 - 10.08 Total Wet Fuel Load Weight (lb): 8.5

Fuel Type & Amount: 2 x 4: 5 4 x 4: 0

Weight (with spacers): 8.5 Weight (with spacers): 0

Piece:	Weight (lbs):	Moisture Readings (%DB):			Fuel Type:
1	~~22.4~~ 1.4	19.4	22.4	20.1	2x4
2	1.3	19.2	20.1	18.7	2x4
3	1.2	20.2	20.2	18.6	2x4
4	1.1	21.6	19.1	18.9	2x4
5	1.3	23.1	18.9	22.2	2x4
6					
7					

Spacer Moisture Readings (%DB)

6.7	21.3	20.3	22.0	20.5			
8.0	19.3	18.3	18.3	18.2			
8.0	19.2	18.5	20.6	19.2			
11.4	13.9	14.1	14.8	16.1			

Technician Signature: 1025 Time (clock): Room Temperature (F): 70 Date: Initials: BD

1/23/18

OMNI-Test Laboratories, Inc. **ASTM E2780 Wood Heater Run Sheets**

Client: Hearth & Home Project Number: 0135WS038E Run Number: 2

Model: Intrepid IV Catalytic Tracking Number: 2264 Date: 1/4/18

Test Crew: D Davis

OMNI Equipment ID numbers:

Wood Heater Run Notes

Air Control Settings

Primary: Air control fully closed, Pushed to the Right.

Secondary: fixed

Tertiary/Pilot: N/A

Fan: N/A

Preburn Notes

Time	Notes
10	Raked coals
30	Raked coals
50	Raked coals
70	Raked coals
105	Raked coals
106	Removed 0.3 lbs of coals

Test Notes

Sketch test fuel configuration

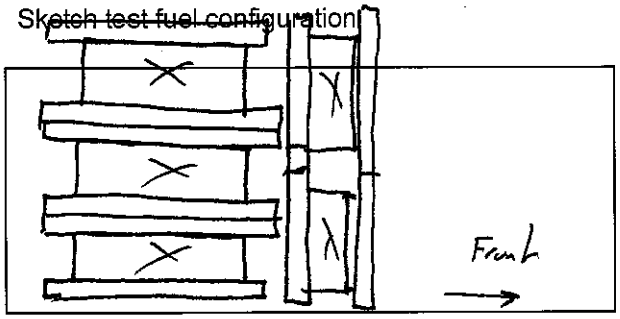

Start up procedures & Timeline:

Bypass: closed by 1:00
Fuel loaded by: 53 seconds
Door closed at: 57 seconds
Primary air: At test setting entire test

Notes: N/A

Time	Notes
60	Changed front filter in train A

Technician Signature: Date: 1/23/18

Run 3

Wood Heater Preburn Data - ASTM E2780

Run:	**3**

Technician Signature:

Manufacturer:	Hearth & Home
Model:	Intrepiod IV Catalytic
Tracking No.:	2264
Project No.:	0135WS038E
Test Date:	1/5/18
Beginning Clock Time:	10:07

Preburn Fuel Data

Fuel Piece Lengths (in.):	6
Total Preburn Weight (lb):	13.5
Fuel Moisture Readings (% DB):	19.9
	22.4
	20.2
Avg Preburn Moisture (% DB):	**20.83**

Coal Bed Range (lb):	**1.7** (min)	**2.1** (max)

			Temperatures (°F)							
Elapsed Time (min)	Scale (lb)	Stack Draft (in H_2O)	FB Top	FB Bottom	FB Back	FB Left	FB Right	Avg. FB	Stack	Ambient
0	10	-0.075	318	144	354	246	184	249.2	994	72
1	9.8	-0.066	336	149	386	250	190	262.2	611	72
2	9.7	-0.059	341	154	417	254	195	272.2	496	72
3	9.6	-0.055	342	159	442	258	200	280.2	436	72
4	9.5	-0.052	342	164	463	262	206	287.4	404	72
5	9.5	-0.05	343	170	481	266	210	294	385	72
6	9.4	-0.05	342	175	498	269	215	299.8	375	71
7	9.3	-0.049	343	180	514	272	219	305.6	368	72
8	9.2	-0.048	343	185	530	275	222	311	366	72
9	9.1	-0.048	345	190	544	277	226	316.4	365	71
10	9	-0.048	347	195	560	280	229	322.2	367	71
11	8.8	-0.05	346	200	569	282	231	325.6	432	71
12	8.7	-0.051	355	205	584	284	234	332.4	390	72
13	8.5	-0.05	363	210	601	286	236	339.2	384	71
14	8.4	-0.05	371	214	619	288	238	346	382	71
15	8.2	-0.049	378	219	638	290	240	353	385	71
16	8.1	-0.05	385	223	656	294	242	360	389	72
17	8	-0.049	392	227	673	299	244	367	389	72
18	7.9	-0.05	398	231	687	303	245	372.8	390	71
19	7.8	-0.048	406	234	698	306	247	378.2	389	71
20	7.6	-0.048	412	238	707	308	249	382.8	386	72
21	7.5	-0.046	423	241	716	311	251	388.4	386	71
22	7.4	-0.048	437	244	726	314	252	394.6	388	72
23	7.3	-0.048	454	247	734	317	254	401.2	388	71
24	7.2	-0.048	475	250	742	320	257	408.8	391	72
25	7	-0.048	496	253	750	323	260	416.4	390	72
26	6.9	-0.048	514	255	756	326	262	422.6	390	72
27	6.8	-0.048	529	258	763	329	265	428.8	391	72
28	6.7	-0.049	545	260	768	333	268	434.8	395	72
29	6.5	-0.049	561	263	774	336	271	441	395	72
30	6.4	-0.048	576	265	779	339	275	446.8	394	72
31	0.2	-0.088	585	266	782	342	279	450.8	983	72
32	5.8	-0.059	595	269	789	344	282	455.8	562	72
33	5.7	-0.055	606	271	792	347	286	460.4	471	72
34	5.5	-0.052	610	272	794	349	291	463.2	436	72
35	5.4	-0.052	607	274	797	351	297	465.2	418	72
36	5.2	-0.05	605	276	801	354	304	468	412	72
37	5.1	-0.05	606	277	805	356	310	470.8	408	72
38	5	-0.049	605	279	810	359	317	474	405	72

Wood Heater Preburn Data - ASTM E2780

Run:	**3**

Technician Signature:

Manufacturer:	Hearth & Home
Model:	Intrepiod IV Catalytic
Tracking No.:	2264
Project No.:	0135WS038E
Test Date:	1/5/18
Beginning Clock Time:	10:07

Preburn Fuel Data

Fuel Piece Lengths (in.):	6
Total Preburn Weight (lb):	13.5
Fuel Moisture Readings (% DB):	19.9
	22.4
	20.2
Avg Preburn Moisture (% DB):	**20.83**

Coal Bed Range (lb):	**1.7** (min)	**2.1** (max)

			Temperatures (°F)							
Elapsed Time (min)	Scale (lb)	Stack Draft (in H_2O)	FB Top	FB Bottom	FB Back	FB Left	FB Right	Avg. FB	Stack	Ambient
39	4.9	-0.048	605	280	813	360	323	476.2	401	72
40	4.8	-0.049	602	281	816	362	330	478.2	399	72
41	4.7	-0.047	600	282	818	364	336	480	395	72
42	4.6	-0.046	597	283	819	365	343	481.4	395	72
43	4.5	-0.047	590	284	823	367	348	482.4	395	72
44	4.4	-0.047	587	285	826	367	354	483.8	393	72
45	4.3	-0.047	584	286	829	368	359	485.2	392	72
46	4.2	-0.046	582	288	831	369	365	487	388	72
47	4.1	-0.046	580	289	831	370	369	487.8	387	72
48	4	-0.045	579	290	831	371	374	489	387	72
49	3.9	-0.045	579	291	829	371	379	489.8	383	72
50	3.9	-0.044	581	293	827	372	384	491.4	382	72
51	3.8	-0.044	582	294	824	372	388	492	378	72
52	3.7	-0.045	584	295	820	373	393	493	375	73
53	3.6	-0.049	576	297	809	374	398	490.8	557	72
54	3.4	-0.047	589	298	807	375	402	494.2	422	73
55	3.3	-0.046	608	300	807	376	406	499.4	390	72
56	3.2	-0.047	620	301	809	377	410	503.4	378	72
57	3.2	-0.046	627	302	812	378	413	506.4	372	72
58	3.1	-0.043	625	303	815	380	416	507.8	368	72
59	3	-0.042	622	304	818	382	418	508.8	367	72
60	2.9	-0.043	619	305	820	383	421	509.6	364	72
61	2.9	-0.041	620	307	820	384	423	510.8	363	72
62	2.8	-0.041	614	307	819	385	425	510	359	73
63	2.8	-0.041	608	308	817	386	427	509.2	356	73
64	2.7	-0.039	601	309	813	387	428	507.6	336	73
65	2.7	-0.04	594	310	807	388	430	505.8	341	72
66	2.7	-0.038	586	311	800	388	431	503.2	344	72
67	2.6	-0.037	581	312	791	388	433	501	340	73
68	2.6	-0.038	576	313	782	389	434	498.8	339	73
69	2.6	-0.037	571	314	773	389	435	496.4	338	73
70	2.5	-0.036	566	315	763	389	436	493.8	337	73
71	2.6	-0.072	566	316	752	389	437	492	367	72
72	2.4	-0.038	557	317	740	390	438	488.4	382	72
73	2.4	-0.038	556	318	733	390	438	487	344	73
74	2.4	-0.036	557	319	726	391	438	486.2	334	73
75	2.4	-0.036	557	320	719	391	439	485.2	327	73
76	2.3	-0.035	556	321	712	392	439	484	324	73
77	2.3	-0.035	556	321	704	393	439	482.6	321	73

Wood Heater Preburn Data - ASTM E2780

Run:	**3**

Technician Signature: 

Manufacturer:	Hearth & Home
Model:	Intrepiod IV Catalytic
Tracking No.:	2264
Project No.:	0135WS038E
Test Date:	1/5/18
Beginning Clock Time:	10:07

Preburn Fuel Data

Fuel Piece Lengths (in.):	6
Total Preburn Weight (lb):	13.5
Fuel Moisture Readings (% DB):	19.9
	22.4
	20.2
Avg Preburn Moisture (% DB):	**20.83**

Coal Bed Range (lb):	**1.7** (min)	**2.1** (max)

			Temperatures (°F)							
Elapsed Time (min)	Scale (lb)	Stack Draft (in H_2O)	FB Top	FB Bottom	FB Back	FB Left	FB Right	Avg. FB	Stack	Ambient
78	2.3	-0.034	555	322	696	393	439	481	320	73
79	2.3	-0.034	555	323	689	394	439	480	318	73
80	2.3	-0.034	555	324	682	395	439	479	317	73
81	2.2	-0.034	555	324	675	396	438	477.6	317	73
82	2.2	-0.033	556	325	668	397	438	476.8	315	73
83	2.2	-0.033	555	325	661	397	438	475.2	315	73
84	2.2	-0.032	555	326	654	398	437	474	314	73
85	2.1	-0.032	554	326	648	399	436	472.6	313	73
86	2.1	-0.032	553	326	642	400	436	471.4	313	73
87	2.1	-0.031	554	327	636	401	435	470.6	313	73
88	2.1	-0.032	554	327	630	402	434	469.4	311	73
89	2	-0.031	553	328	624	402	433	468	309	73
90	2	-0.031	553	328	618	403	433	467	311	72

Wood Heater Test Fuel Data - ASTM E2780

Manufacturer:	Hearth & Home
Model:	Intrepiod IV Catalytic
Tracking No.:	2264
Project No.:	0135WS038E
Test Date:	1/5/2018
Run No.:	3

Firebox Volume (ft^3):	1.31
Fuel Piece Length (in):	13.5
2x4 Crib Weight (lb):	8.5
4x4 Crib Weight (lb):	0

Total Fuel Weight (Dry Basis, lb):	7.1	
Fuel Density (lb/ft^3, Dry Basis):	25.81	OK
Loading Density (lb/ft^3, Wet Basis):	6.49	OK
2x4 Percentage:	N/A	N/A

Coal Bed Range (20-25%): **1.7 - 2.125**

Test Fuel Piece	Weight (lb)	Size	Readings (Dry Basis %)			Dry Weight (lb)
1	1.4	2"x 4"	22.5	22.0	22.2	1.15
2	1.2	2"x 4"	19.2	20.3	19.9	1.00
3	1.3	2"x 4"	20.3	21.6	22.0	1.07
4	1.2	2"x 4"	22.4	21.4	22.6	0.98
5	1.3	2"x 4"	19.3	18.6	19.2	1.09

Spacer Readings (Dry Basis %)			
17.3	14.9		
13.9	15.0		
20.4	16.2		
22.8	13.8		
16.4	14.8		
15.3			
20.5			
22.0			
18.2			
15.4			
20.0			
22.0			
18.0			

Technician Signature: 

Wood Heater Test Data - ASTM E2780 / ASTM E2515

Run: 3

Manufacturer: Hearth & Home
Model: Intrepiod IV Catalytic
Tracking No.: 2264
Project No.: 0135WS038E
Test Date: 05-Jan-18
Beginning Clock Time: 11:39

Total Sampling Time: 177 min
Recording Interval: 1 min
Background Sample Volume: _____ cubic feet

Meter Box Y Factor: 0.981 (1) 0.984 (2) _____ (Amb)

Barometric Pressure:	Begin	Middle	End	Average
	30.12	30.12	30.11	30.12 "Hg

OMNI Equipment Numbers: _____

PM Control Modules: 0035, 0036
Dilution Tunnel MW(dry): 29.00 lb/lb-mole
Dilution Tunnel MW(wet): 28.78 lb/lb-mole
Dilution Tunnel H2O: 2.00 percent
Dilution Tunnel Static: -0.180 "H2O
Tunnel Area: 0.19635 ft2
Pitot Tube Cp: 0.99

Avg. Tunnel Velocity: 13.23 ft/sec.
Initial Tunnel Flow: 144.2 scfm
Average Tunnel Flow: 146.7 scfm
Post-Test Leak Check (1): 0.000 cfm @ 5 in. Hg
Post-Test Leak Check (2): 0.000 cfm @ 7 in. Hg
Average Test Piece Fuel Moisture: 20.90 Dry Basis %

Technician Signature: _____

Velocity Traverse Data	Pt.1	Pt.2	Pt.3	Pt.4	Pt.5	Pt.6	Pt.7	Pt.8	Center	
Initial dP	0.026	0.040	0.042	0.044	0.036	0.028	0.048	0.036	0.048	"H2O
Temp:	96	96	96	96	96	96	96	95	96	°F

V_{strav} 13.26 ft/sec V_{scent} 14.85 ft/sec F_p 0.893

	Particulate Sampling Data														Fuel Weight (lb)		Temperature Data (°F)													Stack Gas Data		
Elapsed Time (min)	Gas Meter 1 (ft^3)	Gas Meter 2 (ft^3)	Sample Rate 1 (cfm)	Sample Rate 2 (cfm)	Orifice dH 1 ("H_2O)	Meter 1 Temp (°F)	Meter 1 Vacuum ("Hg)	Orifice dH 2 ("H_2O)	Meter 2 Temp (°F)	Meter 2 Vacuum ("Hg)	Dilution Tunnel (°F)	Dilution Tunnel Center dP	Pro. Rate 1	Pro. Rate 2	Scale Reading	Weight Change	Firebox Top	Firebox Bottom	Firebox Back	Firebox Left	Firebox Right	Avg. Stove Surface	Catalyst Exit	Stack	Filter 1	Dryer Exit 1	Filter 2	Dryer Exit 2	Ambient	Draft ("H_2O)	CO_2 (%)	CO (%)
0	0.000	0.000			1.03	75	1.84	0.65	76	1.1	106	0.048			8.5		548	328	605	404	432	463	927	293	72	69	72	68	73	-0.026	4.9	0.14
1	0.150	0.158	0.15	0.16	1.36	75	2.03	1.13	76	1.1	133	0.048	95	100	8.5	0	531	328	596	405	431	458	901	278	73	73	73	70	72	-0.060	1.4	0.15
2	0.313	0.320	0.16	0.16	1.36	75	2	1.13	76	1.1	100	0.048	101	100	8.4	-0.1	504	328	594	404	429	452	994	268	73	74	73	70	73	-0.028	8.1	0.03
3	0.477	0.482	0.16	0.16	1.35	75	2	1.13	76	1.1	95	0.048	101	100	8.4	0	482	329	593	404	427	447	1047	267	73	74	73	71	73	-0.031	8.27	0.02
4	0.641	0.644	0.16	0.16	1.35	75	2	1.13	76	1.1	93	0.048	100	99	8.3	-0.1	465	329	595	403	425	443	1078	274	73	75	73	71	72	-0.032	8.25	0.02
5	0.805	0.807	0.16	0.16	1.35	75	2	1.16	76	1.2	93	0.048	100	100	8.3	0	451	329	600	401	423	441	1101	282	73	75	73	71	72	-0.033	8.31	0.01
6	0.968	0.971	0.16	0.16	1.34	76	1.99	1.16	76	1.2	93	0.048	100	101	8.2	-0.1	437	329	605	400	419	438	1113	286	73	75	73	71	73	-0.034	8.36	0.01
7	1.131	1.136	0.16	0.17	1.34	76	1.99	1.16	76	1.2	92	0.048	100	101	8.1	-0.1	427	329	611	397	416	436	1128	293	73	75	73	71	72	-0.034	8.42	0.01
8	1.294	1.300	0.16	0.16	1.34	76	1.99	1.16	76	1.2	92	0.048	100	101	8.1	0	426	328	617	395	413	436	1151	300	73	75	73	71	72	-0.036	9.08	0.04
9	1.456	1.465	0.16	0.17	1.34	76	1.99	1.16	76	1.2	93	0.048	99	101	8.0	-0.1	419	328	625	392	409	435	1152	309	73	75	74	71	73	-0.037	8.52	0.08
10	1.619	1.629	0.16	0.16	1.34	76	1.99	1.16	77	1.2	93	0.048	100	100	7.9	-0.1	416	328	631	389	405	434	1152	315	73	75	74	71	72	-0.038	8.36	0.07
11	1.782	1.794	0.16	0.17	1.34	76	1.98	1.16	77	1.2	94	0.048	100	101	7.8	-0.1	434	328	637	386	402	437	1157	321	74	75	74	71	72	-0.039	8.88	0.1
12	1.945	1.958	0.16	0.16	1.33	76	1.98	1.16	77	1.2	94	0.048	100	101	7.7	-0.1	459	327	643	383	398	442	1189	327	74	75	74	71	73	-0.040	9.19	0.46
13	2.107	2.122	0.16	0.16	1.33	76	1.98	1.15	77	1.2	94	0.048	99	101	7.6	-0.1	476	327	648	380	394	445	1169	331	74	75	74	71	72	-0.041	7.86	0.55
14	2.269	2.286	0.16	0.16	1.32	76	1.98	1.15	77	1.2	95	0.048	99	101	7.5	-0.1	486	326	652	377	391	446	1203	335	74	75	74	71	73	-0.041	10.36	0.22
15	2.431	2.449	0.16	0.16	1.32	77	1.99	1.16	77	1.2	95	0.048	99	100	7.4	-0.1	501	325	656	373	388	449	1261	338	74	75	74	71	73	-0.042	11.56	0.15
16	2.593	2.613	0.16	0.16	1.33	77	1.98	1.15	77	1.2	95	0.048	99	101	7.3	-0.1	508	325	662	370	385	450	1265	343	74	75	74	71	73	-0.042	11.52	0.11
17	2.755	2.778	0.16	0.17	1.33	77	1.99	1.15	77	1.2	96	0.048	99	101	7.2	-0.1	513	324	669	368	381	451	1264	347	74	75	74	71	73	-0.044	11.02	0.11
18	2.919	2.942	0.16	0.16	1.32	77	1.98	1.15	78	1.2	96	0.048	100	101	7.1	-0.1	506	323	675	365	379	450	1259	349	74	75	74	71	72	-0.044	10.46	0.26
19	3.081	3.105	0.16	0.16	1.32	77	1.98	1.15	78	1.2	96	0.048	99	100	6.9	-0.2	500	323	680	363	377	449	1251	349	74	75	74	71	73	-0.043	10.26	0.26
20	3.243	3.269	0.16	0.16	1.32	77	1.98	1.14	78	1.2	96	0.048	99	101	6.8	-0.1	498	322	684	360	375	448	1260	349	74	75	74	72	72	-0.043	10.76	0.19
21	3.405	3.433	0.16	0.16	1.32	78	1.98	1.15	78	1.2	96	0.048	99	101	6.7	-0.1	505	321	689	358	373	449	1291	351	74	75	74	72	73	-0.044	11.8	0.1
22	3.567	3.597	0.16	0.16	1.32	78	1.98	1.15	78	1.2	97	0.048	99	101	6.6	-0.1	521	320	696	356	371	453	1315	354	74	75	74	72	72	-0.044	12.09	0.1
23	3.729	3.761	0.16	0.16	1.33	78	1.98	1.15	78	1.2	97	0.048	99	101	6.5	-0.1	540	319	703	354	370	457	1364	359	74	75	74	72	72	-0.045	13.06	0.54
24	3.892	3.925	0.16	0.16	1.32	78	1.99	1.14	78	1.2	97	0.048	100	101	6.3	-0.2	555	318	711	352	369	461	1391	362	74	75	74	72	72	-0.046	13.25	0.78
25	4.054	4.089	0.16	0.16	1.32	78	1.98	1.14	79	1.2	97	0.048	99	100	6.2	-0.1	569	317	719	350	368	465	1413	365	75	75	74	72	72	-0.046	13.24	1
26	4.216	4.252	0.16	0.16	1.31	78	1.98	1.15	79	1.2	98	0.048	99	100	6.1	-0.1	581	316	727	349	367	468	1412	369	75	75	75	72	72	-0.045	13.13	0.76
27	4.378	4.416	0.16	0.16	1.32	79	1.98	1.15	79	1.2	98	0.048	99	101	6.0	-0.1	592	316	736	347	366	471	1406	370	75	75	75	72	72	-0.045	12.93	0.52
28	4.540	4.580	0.16	0.16	1.32	79	1.98	1.15	79	1.2	98	0.048	99	101	5.8	-0.2	601	315	744	346	365	474	1407	371	75	75	75	72	73	-0.045	13.05	0.62
29	4.703	4.745	0.16	0.17	1.32	79	1.98	1.14	79	1.2	99	0.048	100	101	5.7	-0.1	609	314	751	345	364	477	1407	373	75	76	75	72	72	-0.047	12.96	0.56
30	4.866	4.909	0.16	0.16	1.31	79	1.98	1.15	79	1.2	98	0.048	100	101	5.6	-0.1	616	312	757	344	363	478	1409	372	75	76	75	72	72	-0.045	12.95	0.5
31	5.028	5.073	0.16	0.16	1.32	79	1.98	1.14	80	1.2	99	0.048	99	100	5.5	-0.1	623	311	764	344	363	481	1426	373	75	76	75	72	72	-0.047	13.07	0.79
32	5.191	5.236	0.16	0.16	1.32	79	1.98	1.15	80	1.2	99	0.048	100	100	5.3	-0.2	628	310	770	343	362	483	1439	374	75	76	75	72	72	-0.046	13.23	0.95
33	5.353	5.400	0.16	0.16	1.32	79	1.98	1.15	80	1.2	99	0.048	99	100	5.2	-0.1	631	309	774	343	362	484	1437	372	75	76	75	72	72	-0.046	13.17	1.06
34	5.515	5.564	0.16	0.16	1.32	80	1.99	1.15	80	1.2	99	0.048	99	100	5.1	-0.1	634	308	778	342	362	485	1436	369	75	76	75	72	72	-0.046	13.29	0.97
35	5.678	5.729	0.16	0.17	1.32	80	1.98	1.15	80	1.2	99	0.048	99	101	5.0	-0.1	636	307	783	342	362	486	1436	370	75	76	75	72	73	-0.046	13.18	0.78
36	5.840	5.893	0.16	0.16	1.33	80	1.98	1.15	80	1.2	99	0.048	99	100	4.9	-0.1	636	306	787	342	362	487	1438	369	75	76	75	72	72	-0.045	13.38	0.69

Wood Heater Test Data - ASTM E2780 / ASTM E2515

Run: 3

Manufacturer: Hearth & Home
Model: Intrepiod IV Catalytic
Tracking No.: 2264
Project No.: 0135WS038E
Test Date: 05-Jan-18
Beginning Clock Time: 11:39

Total Sampling Time: 177 min
Recording Interval: 1 min
Background Sample Volume: _____ cubic feet

Meter Box Y Factor: 0.981 (1) 0.984 (2) _____ (Amb)

Barometric Pressure:	Begin	Middle	End	Average
	30.12	30.12	30.11	30.12 "Hg

OMNI Equipment Numbers: _____

PM Control Modules: 0035, 0036
Dilution Tunnel MW(dry): 29.00 lb/lb-mole
Dilution Tunnel MW(wet): 28.78 lb/lb-mole
Dilution Tunnel H2O: 2.00 percent
Dilution Tunnel Static: -0.180 "H2O
Tunnel Area: 0.19635 ft2
Pitot Tube Cp: 0.99

Avg. Tunnel Velocity: 13.23 ft/sec.
Initial Tunnel Flow: 144.2 scfm
Average Tunnel Flow: 146.7 scfm
Post-Test Leak Check (1): 0.000 cfm @ 5 in. Hg
Post-Test Leak Check (2): 0.000 cfm @ 7 in. Hg
Average Test Piece Fuel Moisture: 20.90 Dry Basis %

Technician Signature: _____

Velocity Traverse Data	Pt.1	Pt.2	Pt.3	Pt.4	Pt.5	Pt.6	Pt.7	Pt.8	Center	
Initial dP	0.026	0.040	0.042	0.044	0.036	0.028	0.048	0.036	0.048	"H2O
Temp:	96	96	96	96	96	96	96	95	96	°F

V_{strav} 13.26 ft/sec V_{scent} 14.85 ft/sec F_p 0.893

	Particulate Sampling Data														Fuel Weight (lb)		Temperature Data (°F)													Stack Gas Data		
Elapsed Time (min)	Gas Meter 1 (ft^3)	Gas Meter 2 (ft^3)	Sample Rate 1 (cfm)	Sample Rate 2 (cfm)	Orifice dH 1 ("H_2O)	Meter 1 Temp (°F)	Meter 1 Vacuum ("Hg)	Orifice dH 2 ("H_2O)	Meter 2 Temp (°F)	Meter 2 Vacuum ("Hg)	Dilution Tunnel (°F)	Dilution Tunnel Center dP	Pro. Rate 1	Pro. Rate 2	Scale Reading	Weight Change	Firebox Top	Firebox Bottom	Firebox Back	Firebox Left	Firebox Right	Avg. Stove Surface	Catalyst Exit	Stack	Filter 1	Dryer Exit 1	Filter 2	Dryer Exit 2	Ambient	Draft ("H_2O)	CO_2 (%)	CO (%)
37	6.004	6.057	0.16	0.16	1.32	80	1.99	1.14	80	1.2	98	0.048	100	100	4.8	-0.1	637	305	791	342	362	487	1443	367	75	76	75	72	73	-0.045	13.48	0.77
38	6.167	6.221	0.16	0.16	1.32	80	1.98	1.15	80	1.2	99	0.048	99	100	4.7	-0.1	637	304	794	342	362	488	1445	366	75	76	75	72	72	-0.045	13.53	0.76
39	6.330	6.385	0.16	0.16	1.32	80	1.98	1.15	81	1.2	99	0.048	99	100	4.5	-0.2	634	303	798	342	362	488	1443	364	75	76	75	72	73	-0.045	13.05	0.76
40	6.492	6.549	0.16	0.16	1.32	80	1.98	1.15	81	1.2	99	0.048	99	100	4.4	-0.1	634	303	801	342	362	488	1445	365	75	76	75	72	73	-0.044	13.13	0.83
41	6.655	6.713	0.16	0.16	1.32	80	1.98	1.15	81	1.2	99	0.048	99	100	4.3	-0.1	634	302	805	343	363	489	1449	364	75	76	75	72	73	-0.044	13.3	0.88
42	6.817	6.878	0.16	0.17	1.33	80	1.99	1.15	81	1.2	99	0.048	99	101	4.2	-0.1	632	301	808	343	363	489	1455	365	75	76	75	72	73	-0.045	13.28	0.98
43	6.980	7.042	0.16	0.16	1.32	81	1.98	1.15	81	1.2	99	0.048	99	100	4.1	-0.1	631	300	811	344	364	490	1462	365	75	76	75	72	72	-0.045	13.22	1.03
44	7.144	7.206	0.16	0.16	1.32	81	1.98	1.15	81	1.2	99	0.048	100	100	4.0	-0.1	631	299	814	344	365	491	1468	366	75	76	75	73	73	-0.044	13.44	1.23
45	7.307	7.370	0.16	0.16	1.32	81	1.98	1.15	81	1.2	99	0.048	99	100	3.9	-0.1	633	298	816	344	366	491	1469	365	75	76	75	73	73	-0.044	13.48	1.2
46	7.470	7.534	0.16	0.16	1.32	81	1.98	1.15	81	1.2	99	0.048	99	100	3.8	-0.1	635	298	818	346	367	493	1473	366	75	76	75	73	73	-0.044	13.64	1.32
47	7.632	7.699	0.16	0.17	1.32	81	1.98	1.15	81	1.2	100	0.048	99	101	3.7	-0.1	638	297	821	347	368	494	1475	367	75	76	75	73	73	-0.045	13.72	1.68
48	7.795	7.863	0.16	0.16	1.32	81	1.98	1.15	82	1.2	100	0.048	99	100	3.5	-0.2	645	296	822	348	369	496	1478	368	75	77	75	73	72	-0.044	13.71	1.64
49	7.958	8.028	0.16	0.17	1.33	81	1.98	1.15	82	1.2	99	0.048	99	101	3.4	-0.1	648	296	824	349	370	497	1479	369	75	77	75	73	73	-0.045	13.68	1.51
50	8.121	8.192	0.16	0.16	1.32	81	1.99	1.15	82	1.2	99	0.048	99	100	3.3	-0.1	654	295	826	351	371	499	1484	370	75	77	75	73	73	-0.045	13.59	1.54
51	8.284	8.356	0.16	0.16	1.32	81	1.98	1.15	82	1.2	99	0.048	99	100	3.2	-0.1	661	295	828	352	373	502	1485	370	76	77	75	73	73	-0.045	13.81	1.42
52	8.448	8.521	0.16	0.17	1.32	81	1.98	1.15	82	1.2	99	0.048	100	101	3.1	-0.1	664	294	830	354	374	503	1490	370	76	77	76	73	73	-0.045	13.69	1.28
53	8.611	8.685	0.16	0.16	1.33	82	1.98	1.15	82	1.2	100	0.048	99	100	3.0	-0.1	667	294	832	356	376	505	1493	372	76	77	76	73	73	-0.044	13.59	1.24
54	8.774	8.849	0.16	0.16	1.32	82	1.99	1.15	82	1.2	100	0.048	99	100	2.9	-0.1	670	293	835	358	377	507	1488	370	76	77	76	73	73	-0.045	13.4	1.07
55	8.937	9.014	0.16	0.16	1.32	82	1.99	1.15	82	1.2	99	0.048	99	101	2.8	-0.1	671	292	838	360	378	508	1482	371	76	77	76	73	73	-0.044	13.19	0.96
56	9.100	9.179	0.16	0.17	1.33	82	1.98	1.15	82	1.2	100	0.048	99	101	2.7	-0.1	673	292	841	362	379	509	1473	370	76	77	76	73	73	-0.044	12.61	0.72
57	9.263	9.343	0.16	0.16	1.32	82	1.99	1.15	82	1.2	100	0.048	99	100	2.6	-0.1	673	292	843	364	381	511	1467	370	76	77	76	73	73	-0.044	12.91	0.63
58	9.426	9.507	0.16	0.16	1.33	82	1.98	1.15	83	1.2	100	0.048	99	100	2.5	-0.1	674	291	845	366	382	512	1457	370	76	77	76	73	73	-0.044	12.67	0.48
59	9.590	9.672	0.16	0.17	1.32	82	1.98	1.15	83	1.2	99	0.048	100	100	2.5	0	673	291	845	368	383	512	1444	369	76	77	76	73	73	-0.044	12.56	0.39
60	9.754	9.836	0.16	0.16	1.33	82	1.99	1.15	83	1.2	99	0.048	100	100	2.4	-0.1	672	290	845	370	385	512	1427	369	76	77	76	73	73	-0.043	12.09	0.28
61	9.919	10.001	0.17	0.16	1.34	82	1.95	1.15	83	1.2	100	0.048	100	101	2.3	-0.1	669	290	844	371	386	512	1415	367	76	77	76	73	73	-0.043	11.72	0.21
62	10.083	10.166	0.16	0.17	1.33	82	1.97	1.15	83	1.2	100	0.048	100	101	2.3	0	668	289	843	373	387	512	1391	365	77	77	76	73	73	-0.041	11.22	0.15
63	10.246	10.331	0.16	0.16	1.32	82	1.97	1.15	83	1.2	99	0.048	99	100	2.2	-0.1	665	289	840	375	388	511	1361	364	77	77	76	73	73	-0.043	10.77	0.05
64	10.409	10.495	0.16	0.16	1.32	82	1.98	1.15	83	1.2	100	0.048	99	100	2.1	-0.1	664	289	837	376	389	511	1338	359	77	77	76	73	73	-0.041	10.37	0.04
65	10.573	10.659	0.16	0.16	1.33	82	1.97	1.15	83	1.2	99	0.048	100	100	2.1	0	663	288	833	378	390	510	1317	358	77	77	76	73	73	-0.040	9.89	0.02
66	10.737	10.824	0.16	0.16	1.32	83	1.97	1.15	83	1.2	99	0.048	100	100	2.0	-0.1	663	288	828	379	391	510	1286	356	77	77	76	73	73	-0.041	9.34	0.01
67	10.900	10.988	0.16	0.16	1.33	83	1.97	1.15	83	1.2	99	0.048	99	100	2.0	0	665	287	822	381	391	509	1250	356	77	77	76	73	73	-0.041	8.73	0.02
68	11.064	11.153	0.16	0.17	1.33	83	1.97	1.16	83	1.2	99	0.048	100	100	2.0	0	666	287	815	382	391	508	1214	355	77	77	76	73	73	-0.039	8	0.06
69	11.228	11.318	0.16	0.16	1.33	83	1.98	1.15	83	1.2	99	0.048	100	100	1.9	-0.1	666	287	807	383	392	507	1180	354	77	77	76	73	73	-0.040	7.55	0.09
70	11.392	11.483	0.16	0.17	1.34	83	1.97	1.15	83	1.2	99	0.048	100	100	1.9	0	665	286	799	384	391	505	1151	351	77	77	76	73	73	-0.040	7.51	0.08
71	11.556	11.648	0.16	0.16	1.33	83	1.97	1.15	83	1.2	99	0.048	100	100	1.9	0	661	286	790	385	392	503	1127	349	77	77	76	73	73	-0.039	7.39	0.07
72	11.722	11.812	0.17	0.16	1.36	83	2.01	1.15	84	1.2	98	0.048	101	100	1.8	-0.1	654	286	780	386	392	500	1106	348	77	77	76	73	73	-0.039	7.06	0.08
73	11.888	11.977	0.17	0.17	1.36	83	2.01	1.15	84	1.2	98	0.048	101	100	1.8	0	644	285	771	387	392	496	1088	344	77	77	76	73	73	-0.038	6.93	0.09

Wood Heater Test Data - ASTM E2780 / ASTM E2515

Run: 3

Manufacturer: Hearth & Home
Model: Intrepiod IV Catalytic
Tracking No.: 2264
Project No.: 0135WS038E
Test Date: 05-Jan-18
Beginning Clock Time: 11:39

Total Sampling Time: 177 min
Recording Interval: 1 min
Background Sample Volume: _____ cubic feet

Meter Box Y Factor: 0.981 (1) 0.984 (2) _____ (Amb)

Barometric Pressure:	Begin	Middle	End	Average
	30.12	30.12	30.11	30.12 "Hg

OMNI Equipment Numbers: _____

PM Control Modules: 0035, 0036
Dilution Tunnel MW(dry): 29.00 lb/lb-mole
Dilution Tunnel MW(wet): 28.78 lb/lb-mole
Dilution Tunnel H2O: 2.00 percent
Dilution Tunnel Static: -0.180 "H2O
Tunnel Area: 0.19635 ft2
Pitot Tube Cp: 0.99

Avg. Tunnel Velocity: 13.23 ft/sec.
Initial Tunnel Flow: 144.2 scfm
Average Tunnel Flow: 146.7 scfm
Post-Test Leak Check (1): 0.000 cfm @ 5 in. Hg
Post-Test Leak Check (2): 0.000 cfm @ 7 in. Hg
Average Test Piece Fuel Moisture: 20.90 Dry Basis %

Technician Signature: _____

Velocity Traverse Data	Pt.1	Pt.2	Pt.3	Pt.4	Pt.5	Pt.6	Pt.7	Pt.8	Center	
Initial dP	0.026	0.040	0.042	0.044	0.036	0.028	0.048	0.036	0.048	"H2O
Temp:	96	96	96	96	96	96	96	95	96	°F

V_{strav} 13.26 ft/sec V_{scent} 14.85 ft/sec F_p 0.893

	Particulate Sampling Data														Fuel Weight (lb)		Temperature Data (°F)												Stack Gas Data		
Elapsed Time (min)	Gas Meter 1 (ft^3)	Gas Meter 2 (ft^3)	Sample Rate 1 (cfm)	Sample Rate 2 (cfm)	Orifice dH 1 ("H_2O)	Meter 1 Temp (°F)	Meter 1 Vacuum ("Hg)	Orifice dH 2 ("H_2O)	Meter 2 Temp (°F)	Meter 2 Vacuum ("Hg)	Dilution Tunnel (°F)	Dilution Tunnel Center dP	Pro. Rate 1	Pro. Rate 2	Scale Reading	Weight Change	Firebox Top	Firebox Bottom	Firebox Back	Firebox Left	Firebox Right	Avg. Stove Surface	Catalyst Exit	Stack	Filter 1	Dryer Exit 1	Filter 2	Dryer Exit 2	Ambient	Draft ("H_2O)	CO_2 (%)	CO (%)
74	12.055	12.142	0.17	0.16	1.37	83	2.01	1.15	84	1.2	98	0.048	101	100	1.8	0	633	285	761	387	392	492	1069	343	77	77	76	73	73	-0.038	6.63	0.1
75	12.221	12.306	0.17	0.16	1.37	83	2.01	1.15	84	1.2	98	0.048	101	100	1.8	0	624	285	751	388	392	488	1051	342	77	77	76	73	73	-0.039	6.3	0.13
76	12.387	12.471	0.17	0.17	1.36	83	2.02	1.15	84	1.2	97	0.048	101	100	1.8	0	617	284	742	389	393	485	1032	341	77	77	76	73	73	-0.038	6.23	0.15
77	12.553	12.636	0.17	0.16	1.37	83	2.01	1.15	84	1.2	97	0.048	101	100	1.7	-0.1	610	284	732	389	393	482	1014	340	77	77	76	73	73	-0.038	6.1	0.16
78	12.720	12.802	0.17	0.17	1.36	83	2.01	1.15	84	1.2	97	0.048	101	101	1.7	0	604	284	723	389	393	479	998	339	77	77	76	73	73	-0.037	6.05	0.18
79	12.886	12.967	0.17	0.17	1.37	83	2.01	1.15	84	1.2	97	0.048	101	100	1.7	0	598	284	714	389	393	476	982	337	77	77	76	73	73	-0.037	5.99	0.19
80	13.052	13.131	0.17	0.16	1.37	83	2.01	1.15	84	1.2	97	0.048	101	100	1.7	0	594	284	705	390	394	473	967	335	77	76	76	73	73	-0.036	5.97	0.19
81	13.218	13.296	0.17	0.16	1.37	83	2.01	1.15	84	1.2	97	0.048	101	100	1.7	0	590	283	696	390	394	471	951	334	77	76	76	73	73	-0.035	5.77	0.2
82	13.385	13.461	0.17	0.17	1.37	83	2.01	1.15	84	1.2	97	0.048	101	100	1.7	0	587	283	687	390	394	468	934	331	77	76	76	73	73	-0.036	5.57	0.22
83	13.551	13.625	0.17	0.16	1.36	83	2.01	1.15	84	1.2	97	0.048	101	100	1.6	-0.1	582	283	679	390	394	466	921	331	76	76	76	73	73	-0.035	5.42	0.23
84	13.717	13.790	0.17	0.16	1.37	83	2.01	1.15	84	1.2	96	0.048	100	100	1.6	0	578	282	671	389	394	463	911	329	76	76	76	73	73	-0.035	5.5	0.24
85	13.883	13.955	0.17	0.17	1.37	84	2.01	1.15	84	1.2	97	0.048	100	100	1.6	0	573	282	662	389	395	460	902	328	76	76	76	73	73	-0.035	5.55	0.25
86	14.050	14.121	0.17	0.17	1.37	84	2.01	1.15	84	1.2	95	0.048	101	101	1.6	0	569	282	654	389	395	458	893	324	76	76	76	73	73	-0.035	5.53	0.25
87	14.216	14.286	0.17	0.16	1.37	84	2.01	1.15	84	1.2	96	0.048	100	100	1.6	0	566	281	647	389	395	456	886	323	76	76	76	73	73	-0.034	5.54	0.25
88	14.382	14.451	0.17	0.17	1.37	84	2.01	1.15	84	1.2	95	0.048	100	100	1.6	0	562	281	640	389	395	453	879	322	76	76	76	73	73	-0.034	5.62	0.26
89	14.549	14.615	0.17	0.16	1.37	84	2.01	1.15	84	1.2	94	0.048	101	99	1.5	-0.1	557	281	633	388	395	451	874	321	76	76	76	73	73	-0.035	5.57	0.27
90	14.715	14.780	0.17	0.16	1.37	84	2.01	1.15	84	1.2	94	0.048	100	100	1.5	0	553	280	626	388	395	448	867	319	76	76	76	73	73	-0.034	5.49	0.28
91	14.881	14.945	0.17	0.17	1.37	84	2.01	1.15	84	1.2	93	0.048	100	100	1.5	0	551	280	620	387	395	447	859	317	76	76	76	73	73	-0.034	5.38	0.26
92	15.048	15.110	0.17	0.16	1.36	84	2.02	1.16	84	1.2	93	0.048	101	100	1.5	0	549	280	614	387	395	445	851	316	76	75	76	73	73	-0.035	5.29	0.28
93	15.214	15.275	0.17	0.17	1.37	84	2.01	1.15	84	1.2	93	0.048	100	100	1.5	0	545	279	608	386	395	443	844	315	76	75	76	72	73	-0.034	5.23	0.29
94	15.380	15.441	0.17	0.17	1.37	84	2.01	1.15	84	1.2	93	0.048	100	100	1.5	0	542	279	602	386	395	441	843	314	76	75	75	72	73	-0.033	5.36	0.32
95	15.547	15.606	0.17	0.16	1.38	84	2.01	1.15	84	1.2	92	0.048	101	100	1.5	0	539	279	596	385	395	439	839	315	76	75	75	72	73	-0.034	5.21	0.33
96	15.713	15.771	0.17	0.17	1.37	84	2.01	1.15	84	1.2	92	0.048	100	100	1.4	-0.1	536	278	591	384	395	437	833	313	76	75	75	72	73	-0.033	5.14	0.34
97	15.880	15.936	0.17	0.16	1.37	84	2.01	1.15	84	1.2	91	0.048	100	100	1.4	0	533	278	586	384	394	435	827	311	76	75	75	72	73	-0.034	5.03	0.36
98	16.046	16.101	0.17	0.16	1.37	84	2.01	1.16	84	1.2	91	0.048	100	100	1.4	0	533	277	581	383	394	434	823	310	76	75	75	72	73	-0.033	4.92	0.37
99	16.213	16.266	0.17	0.16	1.38	84	2.01	1.15	84	1.2	92	0.048	101	100	1.4	0	530	277	576	382	393	432	817	309	75	75	75	72	72	-0.033	4.87	0.39
100	16.379	16.431	0.17	0.17	1.37	84	2.01	1.16	84	1.2	91	0.048	100	100	1.4	0	527	276	571	381	393	430	811	308	75	75	75	72	73	-0.033	4.81	0.4
101	16.546	16.596	0.17	0.16	1.37	84	2.01	1.15	84	1.2	91	0.048	100	100	1.4	0	524	276	566	381	392	428	804	307	75	75	75	72	73	-0.033	4.66	0.41
102	16.713	16.761	0.17	0.16	1.37	84	2.01	1.16	84	1.2	91	0.048	100	100	1.4	0	520	276	561	380	392	426	797	306	75	75	75	72	72	-0.033	4.59	0.43
103	16.880	16.927	0.17	0.17	1.38	84	2.01	1.16	84	1.2	90	0.048	100	100	1.4	0	517	275	557	379	391	424	791	303	75	74	75	72	72	-0.032	4.46	0.43
104	17.046	17.092	0.17	0.16	1.37	84	2	1.15	84	1.2	90	0.048	100	99	1.3	-0.1	514	275	552	378	390	422	786	302	75	74	75	72	72	-0.033	4.43	0.44
105	17.213	17.257	0.17	0.17	1.38	84	2.01	1.15	84	1.2	90	0.048	100	99	1.3	0	511	275	548	378	389	420	781	302	75	74	75	72	72	-0.032	4.44	0.46
106	17.380	17.423	0.17	0.17	1.38	84	2.01	1.15	84	1.2	90	0.048	100	100	1.3	0	509	274	543	377	388	418	776	302	75	74	75	72	72	-0.032	4.42	0.46
107	17.547	17.588	0.17	0.17	1.37	84	2.01	1.16	84	1.2	90	0.048	100	99	1.3	0	507	273	539	376	387	416	771	301	75	74	74	72	72	-0.033	4.39	0.48
108	17.714	17.753	0.17	0.16	1.38	84	2.01	1.15	84	1.2	90	0.048	100	99	1.3	0	504	273	535	375	386	415	768	299	75	74	74	72	72	-0.032	4.35	0.49
109	17.881	17.918	0.17	0.16	1.37	84	2.01	1.16	84	1.2	90	0.048	100	99	1.3	0	502	272	531	374	386	413	767	298	75	74	74	71	72	-0.032	4.39	0.5
110	18.048	18.084	0.17	0.17	1.37	84	2.01	1.16	84	1.2	89	0.048	100	100	1.3	0	500	272	527	373	385	411	765	298	74	74	74	71	72	-0.033	4.4	0.51

Wood Heater Test Data - ASTM E2780 / ASTM E2515

Run: 3

Manufacturer: Hearth & Home
Model: Intrepiod IV Catalytic
Tracking No.: 2264
Project No.: 0135WS038E
Test Date: 05-Jan-18
Beginning Clock Time: 11:39

Total Sampling Time: 177 min
Recording Interval: 1 min
Background Sample Volume: _____ cubic feet

Meter Box Y Factor: 0.981 (1) 0.984 (2) _____ (Amb)

Barometric Pressure:	Begin	Middle	End	Average
	30.12	30.12	30.11	30.12 "Hg

OMNI Equipment Numbers: _____

PM Control Modules: 0035, 0036
Dilution Tunnel MW(dry): 29.00 lb/lb-mole
Dilution Tunnel MW(wet): 28.78 lb/lb-mole
Dilution Tunnel H2O: 2.00 percent
Dilution Tunnel Static: -0.180 "H2O
Tunnel Area: 0.19635 ft2
Pitot Tube Cp: 0.99

Avg. Tunnel Velocity: 13.23 ft/sec.
Initial Tunnel Flow: 144.2 scfm
Average Tunnel Flow: 146.7 scfm
Post-Test Leak Check (1): 0.000 cfm @ 5 in. Hg
Post-Test Leak Check (2): 0.000 cfm @ 7 in. Hg
Average Test Piece Fuel Moisture: 20.90 Dry Basis %

Technician Signature: _____

Velocity Traverse Data	Pt.1	Pt.2	Pt.3	Pt.4	Pt.5	Pt.6	Pt.7	Pt.8	Center	
Initial dP	0.026	0.040	0.042	0.044	0.036	0.028	0.048	0.036	0.048	"H2O
Temp:	96	96	96	96	96	96	96	95	96	°F

V_{strav} 13.26 ft/sec V_{scent} 14.85 ft/sec F_p 0.893

	Particulate Sampling Data														Fuel Weight (lb)		Temperature Data (°F)												Stack Gas Data		
Elapsed Time (min)	Gas Meter 1 (ft^3)	Gas Meter 2 (ft^3)	Sample Rate 1 (cfm)	Sample Rate 2 (cfm)	Orifice dH 1 ("H_2O)	Meter 1 Temp (°F)	Meter 1 Vacuum ("Hg)	Orifice dH 2 ("H_2O)	Meter 2 Temp (°F)	Meter 2 Vacuum ("Hg)	Dilution Tunnel (°F)	Dilution Tunnel Center dP	Pro. Rate 1	Pro. Rate 2	Scale Reading	Weight Change	Firebox Top	Firebox Bottom	Firebox Back	Firebox Left	Firebox Right	Avg. Stove Surface	Catalyst Exit	Stack	Filter 1	Dryer Exit 1	Filter 2	Dryer Exit 2	Ambient	Draft ("H_2O)	CO_2 (%)	CO (%)
111	18.215	18.249	0.17	0.16	1.38	84	2.01	1.15	84	1.2	89	0.048	100	99	1.3	0	499	271	523	372	384	410	762	296	74	74	74	71	72	-0.032	4.41	0.52
112	18.382	18.415	0.17	0.17	1.37	83	2.02	1.15	84	1.2	89	0.048	100	100	1.3	0	496	271	519	371	382	408	759	295	74	74	74	71	72	-0.031	4.41	0.53
113	18.548	18.581	0.17	0.17	1.38	83	2.02	1.16	84	1.2	89	0.048	100	100	1.2	-0.1	495	270	515	370	381	406	756	294	74	74	74	71	71	-0.031	4.41	0.53
114	18.715	18.746	0.17	0.16	1.38	83	2.01	1.15	84	1.2	89	0.048	100	99	1.2	0	494	270	512	370	380	405	750	294	74	73	74	71	72	-0.030	4.37	0.52
115	18.882	18.911	0.17	0.17	1.37	83	2	1.15	84	1.2	89	0.048	100	99	1.2	0	493	269	508	368	379	403	743	293	74	73	74	71	71	-0.031	4.37	0.51
116	19.050	19.076	0.17	0.16	1.37	83	2.01	1.15	84	1.2	89	0.048	101	99	1.2	0	492	269	505	368	378	402	740	292	74	73	74	71	71	-0.031	4.39	0.52
117	19.217	19.241	0.17	0.16	1.37	83	2.01	1.16	84	1.2	88	0.048	100	99	1.2	0	491	268	502	367	378	401	736	290	74	73	74	71	71	-0.031	4.35	0.52
118	19.384	19.407	0.17	0.17	1.36	83	2.01	1.15	84	1.2	88	0.048	100	100	1.2	0	490	268	499	366	376	400	731	289	74	73	73	71	71	-0.031	4.29	0.52
119	19.551	19.572	0.17	0.16	1.37	83	2.01	1.16	84	1.2	88	0.048	100	99	1.2	0	488	267	495	365	375	398	726	288	74	73	73	71	71	-0.030	4.31	0.53
120	19.718	19.738	0.17	0.17	1.37	83	2.01	1.16	84	1.2	88	0.048	100	100	1.1	-0.1	487	267	492	364	374	397	731	288	73	73	73	71	71	-0.031	4.35	0.57
121	19.885	19.903	0.17	0.16	1.38	83	2	1.16	84	1.2	88	0.048	100	99	1.1	0	485	266	489	363	373	395	735	289	73	73	73	70	71	-0.030	4.39	0.59
122	20.051	20.069	0.17	0.17	1.38	83	2.01	1.15	84	1.2	88	0.048	100	100	1.1	0	483	265	486	362	372	394	733	287	73	73	73	70	71	-0.030	4.3	0.58
123	20.219	20.234	0.17	0.17	1.37	83	2.01	1.16	84	1.2	88	0.048	101	99	1.1	0	482	265	484	361	371	393	729	285	73	73	73	70	71	-0.030	4.15	0.57
124	20.386	20.399	0.17	0.16	1.38	83	2.01	1.15	84	1.2	87	0.048	100	99	1.1	0	480	264	481	361	370	391	727	285	73	73	73	70	70	-0.031	4.18	0.59
125	20.553	20.565	0.17	0.17	1.38	83	2.01	1.15	83	1.2	87	0.048	100	100	1.1	0	478	264	479	360	369	390	723	284	73	72	73	70	71	-0.030	4.13	0.59
126	20.719	20.729	0.17	0.16	1.37	83	2	1.16	83	1.2	87	0.048	100	99	1.1	0	474	263	476	359	368	388	730	284	73	72	73	70	71	-0.029	5.31	0.58
127	20.886	20.895	0.17	0.17	1.38	83	2.01	1.16	83	1.2	87	0.048	100	100	1.0	-0.1	471	263	474	358	367	387	734	282	73	72	73	70	71	-0.028	5.94	0.55
128	21.053	21.060	0.17	0.16	1.38	83	2.01	1.15	83	1.2	87	0.048	100	99	1.0	0	469	262	472	357	367	385	738	282	73	72	73	70	70	-0.030	5.86	0.55
129	21.220	21.226	0.17	0.17	1.38	83	2.01	1.16	83	1.2	87	0.048	100	100	1.0	0	469	261	470	356	366	384	739	282	73	72	73	70	70	-0.030	5.7	0.58
130	21.387	21.391	0.17	0.16	1.39	83	2.01	1.15	83	1.2	87	0.048	100	99	1.0	0	470	261	469	356	366	384	742	281	73	72	73	70	71	-0.030	5.6	0.62
131	21.553	21.556	0.17	0.17	1.38	83	2.01	1.16	83	1.2	87	0.048	100	99	1.0	0	472	260	467	355	365	384	744	281	73	72	73	70	71	-0.030	5.53	0.62
132	21.721	21.722	0.17	0.17	1.39	83	2.01	1.15	83	1.2	87	0.048	101	100	0.9	-0.1	472	260	465	355	365	383	744	281	73	72	73	70	70	-0.030	5.37	0.62
133	21.888	21.888	0.17	0.17	1.38	83	2.01	1.16	83	1.2	87	0.048	100	100	0.9	0	474	259	464	354	365	383	741	281	73	72	72	70	70	-0.030	5.36	0.61
134	22.055	22.053	0.17	0.16	1.39	83	2.01	1.16	83	1.2	87	0.048	100	99	0.9	0	475	258	463	354	365	383	742	282	73	72	72	69	70	-0.029	5.41	0.63
135	22.222	22.218	0.17	0.16	1.39	83	2.01	1.15	83	1.2	87	0.048	100	99	0.9	0	477	258	462	353	365	383	742	281	72	72	72	69	70	-0.029	5.35	0.63
136	22.389	22.383	0.17	0.16	1.39	83	2.01	1.15	83	1.2	87	0.048	100	99	0.9	0	478	257	461	353	365	383	741	282	72	72	72	69	70	-0.029	5.4	0.65
137	22.556	22.549	0.17	0.17	1.39	83	2.01	1.16	83	1.2	86	0.048	100	100	0.8	-0.1	479	256	460	353	365	383	739	281	72	72	72	69	70	-0.030	5.48	0.66
138	22.723	22.714	0.17	0.16	1.39	83	2.01	1.16	83	1.2	87	0.048	100	99	0.8	0	480	256	458	352	365	382	737	280	72	71	72	69	70	-0.029	5.44	0.62
139	22.890	22.880	0.17	0.17	1.38	82	2	1.15	83	1.2	86	0.048	100	100	0.8	0	480	255	457	352	365	382	738	280	72	71	72	69	70	-0.030	5.38	0.66
140	23.057	23.045	0.17	0.17	1.38	82	2.01	1.16	83	1.2	86	0.048	100	99	0.8	0	482	255	456	352	366	382	738	280	72	71	72	69	70	-0.029	5.34	0.66
141	23.224	23.211	0.17	0.17	1.38	82	2.01	1.16	83	1.2	86	0.048	100	100	0.8	0	483	254	455	352	365	382	730	279	72	71	72	69	70	-0.030	5.23	0.62
142	23.391	23.376	0.17	0.17	1.38	82	2.01	1.16	83	1.2	86	0.048	100	99	0.8	0	484	253	454	351	366	382	728	280	72	71	72	69	70	-0.028	5.22	0.64
143	23.559	23.542	0.17	0.17	1.38	82	2.01	1.16	83	1.2	86	0.048	101	100	0.7	-0.1	486	253	453	351	366	382	725	278	72	71	72	69	70	-0.029	5.11	0.64
144	23.726	23.707	0.17	0.16	1.37	82	2.01	1.15	83	1.2	86	0.048	100	99	0.7	0	486	252	452	351	366	381	726	279	72	71	72	69	70	-0.029	5.09	0.69
145	23.893	23.872	0.17	0.16	1.37	82	2.01	1.15	83	1.2	86	0.048	100	99	0.7	0	488	252	451	351	367	382	722	278	72	71	72	69	70	-0.028	5.05	0.65
146	24.060	24.037	0.17	0.16	1.38	82	2	1.16	82	1.2	86	0.048	100	99	0.7	0	487	251	449	351	367	381	721	277	72	71	72	69	70	-0.029	4.98	0.67
147	24.227	24.203	0.17	0.17	1.38	82	2.01	1.16	82	1.2	86	0.048	100	100	0.7	0	487	251	448	351	367	381	716	276	72	71	72	69	70	-0.028	4.98	0.65

Wood Heater Test Data - ASTM E2780 / ASTM E2515

Run: 3

Manufacturer: Hearth & Home
Model: Intrepiod IV Catalytic
Tracking No.: 2264
Project No.: 0135WS038E
Test Date: 05-Jan-18
Beginning Clock Time: 11:39

Total Sampling Time: 177 min
Recording Interval: 1 min
Background Sample Volume: _____ cubic feet

Meter Box Y Factor: 0.981 (1) 0.984 (2) _____ (Amb)

Barometric Pressure:	Begin	Middle	End	Average
	30.12	30.12	30.11	30.12 "Hg

OMNI Equipment Numbers: _____

PM Control Modules: 0035, 0036
Dilution Tunnel MW(dry): 29.00 lb/lb-mole
Dilution Tunnel MW(wet): 28.78 lb/lb-mole
Dilution Tunnel H2O: 2.00 percent
Dilution Tunnel Static: -0.180 "H2O
Tunnel Area: 0.19635 ft2
Pitot Tube Cp: 0.99

Avg. Tunnel Velocity: 13.23 ft/sec.
Initial Tunnel Flow: 144.2 scfm
Average Tunnel Flow: 146.7 scfm
Post-Test Leak Check (1): 0.000 cfm @ 5 in. Hg
Post-Test Leak Check (2): 0.000 cfm @ 7 in. Hg
Average Test Piece Fuel Moisture: 20.90 Dry Basis %

Technician Signature: _____

Velocity Traverse Data	Pt.1	Pt.2	Pt.3	Pt.4	Pt.5	Pt.6	Pt.7	Pt.8	Center	
Initial dP	0.026	0.040	0.042	0.044	0.036	0.028	0.048	0.036	0.048	"H2O
Temp:	96	96	96	96	96	96	96	95	96	°F

V_{strav} 13.26 ft/sec V_{scent} 14.85 ft/sec F_p 0.893

	Particulate Sampling Data														Fuel Weight (lb)		Temperature Data (°F)													Stack Gas Data		
Elapsed Time (min)	Gas Meter 1 (ft^3)	Gas Meter 2 (ft^3)	Sample Rate 1 (cfm)	Sample Rate 2 (cfm)	Orifice dH 1 ("H_2O)	Meter 1 Temp (°F)	Meter 1 Vacuum ("Hg)	Orifice dH 2 ("H_2O)	Meter 2 Temp (°F)	Meter 2 Vacuum ("Hg)	Dilution Tunnel (°F)	Dilution Tunnel Center dP	Pro. Rate 1	Pro. Rate 2	Scale Reading	Weight Change	Firebox Top	Firebox Bottom	Firebox Back	Firebox Left	Firebox Right	Avg. Stove Surface	Catalyst Exit	Stack	Filter 1	Dryer Exit 1	Filter 2	Dryer Exit 2	Ambient	Draft ("H_2O)	CO_2 (%)	CO (%)
148	24.394	24.368	0.17	0.16	1.38	82	2	1.16	82	1.2	86	0.048	100	99	0.6	-0.1	487	251	447	351	368	381	721	277	72	71	72	69	70	-0.028	5.01	0.7
149	24.561	24.533	0.17	0.17	1.38	82	2.01	1.16	82	1.2	86	0.048	100	99	0.6	0	487	250	446	350	367	380	722	277	72	71	72	69	70	-0.028	4.98	0.72
150	24.729	24.699	0.17	0.17	1.39	82	2.01	1.16	82	1.2	86	0.048	101	100	0.6	0	485	249	445	350	368	379	718	275	72	71	72	69	70	-0.028	4.96	0.66
151	24.896	24.864	0.17	0.16	1.38	82	2.01	1.16	82	1.2	86	0.048	100	99	0.6	0	483	249	443	350	368	379	712	273	72	71	72	68	69	-0.028	4.96	0.62
152	25.063	25.030	0.17	0.17	1.38	82	2	1.15	82	1.2	86	0.048	100	100	0.6	0	481	248	442	350	368	378	709	274	72	71	72	68	70	-0.028	4.96	0.62
153	25.229	25.195	0.17	0.16	1.39	82	2.01	1.15	82	1.2	86	0.048	100	99	0.6	0	479	248	441	350	368	377	708	272	72	71	72	68	69	-0.029	4.92	0.62
154	25.396	25.360	0.17	0.16	1.38	82	2.01	1.15	82	1.2	86	0.048	100	99	0.6	0	478	248	440	349	368	377	705	275	72	71	72	68	70	-0.027	4.87	0.63
155	25.563	25.525	0.17	0.16	1.39	82	2.01	1.15	82	1.2	86	0.048	100	99	0.5	-0.1	477	247	439	349	368	376	702	273	72	71	72	68	70	-0.028	4.8	0.63
156	25.730	25.691	0.17	0.17	1.39	82	2	1.16	82	1.2	86	0.048	100	100	0.5	0	475	247	438	349	368	375	704	273	72	70	71	68	70	-0.027	4.81	0.65
157	25.897	25.856	0.17	0.17	1.38	82	2.01	1.16	82	1.2	85	0.048	100	99	0.5	0	473	247	437	348	367	374	701	272	72	70	72	68	70	-0.028	5.73	0.55
158	26.064	26.021	0.17	0.16	1.38	82	2	1.15	82	1.2	85	0.048	100	99	0.5	0	473	246	436	348	368	374	699	271	71	70	71	68	69	-0.028	5.51	0.53
159	26.231	26.186	0.17	0.16	1.38	82	2	1.15	82	1.2	85	0.048	100	99	0.5	0	473	246	435	348	367	374	695	271	71	70	71	68	69	-0.027	5.38	0.53
160	26.398	26.352	0.17	0.17	1.38	82	2	1.15	82	1.2	85	0.048	100	100	0.4	-0.1	473	245	434	347	367	373	692	270	71	70	71	68	70	-0.028	5.29	0.51
161	26.565	26.517	0.17	0.16	1.38	82	2	1.15	82	1.2	85	0.048	100	99	0.4	0	472	245	433	347	366	373	691	269	71	70	71	68	69	-0.028	5.2	0.5
162	26.732	26.682	0.17	0.16	1.39	82	2.01	1.16	82	1.2	85	0.048	100	99	0.4	0	472	245	432	347	366	372	691	268	71	70	71	68	69	-0.028	5.12	0.5
163	26.899	26.848	0.17	0.17	1.39	82	2.01	1.15	82	1.2	85	0.048	100	100	0.4	0	472	245	431	346	366	372	690	269	71	70	71	68	70	-0.028	5.07	0.5
164	27.066	27.012	0.17	0.16	1.39	82	2.01	1.15	82	1.2	85	0.048	100	99	0.4	0	471	244	431	346	365	371	688	269	71	70	71	68	69	-0.027	5	0.5
165	27.233	27.178	0.17	0.17	1.38	82	2	1.16	82	1.2	85	0.048	100	100	0.3	-0.1	471	244	430	346	365	371	687	269	71	70	71	68	70	-0.028	5	0.51
166	27.400	27.343	0.17	0.16	1.38	81	2	1.16	82	1.2	85	0.048	100	99	0.3	0	471	244	429	345	364	371	685	268	71	70	71	68	69	-0.027	4.98	0.51
167	27.567	27.508	0.17	0.16	1.38	81	2.01	1.15	82	1.2	85	0.048	100	99	0.3	0	470	244	429	345	364	370	685	269	71	70	71	68	69	-0.027	4.92	0.52
168	27.734	27.673	0.17	0.16	1.38	81	2.01	1.15	82	1.2	85	0.048	100	99	0.3	0	469	243	427	345	363	369	681	268	71	70	71	68	69	-0.026	4.85	0.51
169	27.902	27.839	0.17	0.17	1.38	81	2.01	1.16	82	1.2	85	0.048	101	100	0.3	0	468	243	427	344	363	369	693	266	71	70	71	68	69	-0.026	6.62	0.41
170	28.069	28.005	0.17	0.17	1.38	81	2	1.15	82	1.2	85	0.048	100	100	0.2	-0.1	469	243	427	345	363	369	701	263	71	70	71	68	70	-0.027	6.7	0.35
171	28.236	28.170	0.17	0.17	1.38	81	2.01	1.16	81	1.2	84	0.048	100	100	0.2	0	471	243	427	344	362	369	707	266	71	70	71	68	70	-0.027	6.64	0.36
172	28.403	28.335	0.17	0.16	1.38	81	2.01	1.15	81	1.2	84	0.048	100	100	0.2	0	474	243	428	344	362	370	712	266	71	70	71	68	69	-0.028	6.47	0.35
173	28.570	28.500	0.17	0.16	1.39	81	2	1.15	81	1.2	85	0.048	100	100	0.2	0	477	243	428	344	362	371	715	267	71	70	71	68	69	-0.028	6.45	0.34
174	28.737	28.665	0.17	0.16	1.37	81	2.01	1.15	81	1.2	84	0.048	100	100	0.1	-0.1	478	243	429	344	361	371	717	267	71	70	71	67	69	-0.028	6.41	0.33
175	28.904	28.830	0.17	0.16	1.38	81	2.01	1.16	81	1.2	84	0.048	100	100	0.1	0	480	243	430	344	361	372	719	268	71	70	71	67	69	-0.027	6.43	0.33
176	29.071	28.995	0.17	0.17	1.38	81	2.01	1.15	81	1.2	84	0.048	100	100	0.1	0	481	243	430	345	362	372	722	269	71	70	71	67	69	-0.027	6.34	0.33
177	29.238	29.160	0.17	0.16	1.38	81	2.01	1.16	81	1.2	84	0.048	100	100	0.0	-0.1	483	243	431	345	362	373	724	269	71	70	71	67	69	-0.027	6.3	0.35

Wood Heater Test Data - ASTM E2780 / ASTM E2515

Run: 3

Manufacturer: Hearth & Home
Model: Intrepiod IV Catalytic
Tracking No.: 2264
Project No.: 0135WS038E
Test Date: 05-Jan-18
Beginning Clock Time: 11:39

Total Sampling Time: 177 min
Recording Interval: 1 min
Background Sample Volume: _____ cubic feet

Meter Box Y Factor: 0.981 (1) 0.984 (2) _____ (Amb)

Barometric Pressure:	Begin	Middle	End	Average
	30.12	30.12	30.11	30.12 "Hg

OMNI Equipment Numbers: _____

PM Control Modules: 0035, 0036
Dilution Tunnel MW(dry): 29.00 lb/lb-mole
Dilution Tunnel MW(wet): 28.78 lb/lb-mole
Dilution Tunnel H2O: 2.00 percent
Dilution Tunnel Static: -0.180 "H2O
Tunnel Area: 0.19635 ft2
Pitot Tube Cp: 0.99

Avg. Tunnel Velocity: 13.23 ft/sec.
Initial Tunnel Flow: 144.2 scfm
Average Tunnel Flow: 146.7 scfm
Post-Test Leak Check (1): 0.000 cfm @ 5 in. Hg
Post-Test Leak Check (2): 0.000 cfm @ 7 in. Hg
Average Test Piece Fuel Moisture: 20.90 Dry Basis %

Technician Signature: _____

Velocity Traverse Data	Pt.1	Pt.2	Pt.3	Pt.4	Pt.5	Pt.6	Pt.7	Pt.8	Center	
Initial dP	0.026	0.040	0.042	0.044	0.036	0.028	0.048	0.036	0.048	"H2O
Temp:	96	96	96	96	96	96	96	95	96	°F

V_{strav} 13.26 ft/sec V_{scent} 14.85 ft/sec F_p 0.893

	Particulate Sampling Data														Fuel Weight (lb)		Temperature Data (°F)													Stack Gas Data		
Elapsed Time (min)	Gas Meter 1 (ft^3)	Gas Meter 2 (ft^3)	Sample Rate 1 (cfm)	Sample Rate 2 (cfm)	Orifice dH 1 ("H_2O)	Meter 1 Temp (°F)	Meter 1 Vacuum ("Hg)	Orifice dH 2 ("H_2O)	Meter 2 Temp (°F)	Meter 2 Vacuum ("Hg)	Dilution Tunnel (°F)	Dilution Tunnel Center dP	Pro. Rate 1	Pro. Rate 2	Scale Reading	Weight Change	Firebox Top	Firebox Bottom	Firebox Back	Firebox Left	Firebox Right	Avg. Stove Surface	Catalyst Exit	Stack	Filter 1	Dryer Exit 1	Filter 2	Dryer Exit 2	Ambient	Draft ("H_2O)	CO_2 (%)	CO (%)
Avg/Tot	29.238	29.160	0.17	0.16	1.35	81		1.15	82		93	0.048	100	100								90.6				74	74	71	72	-0.036		

Wood Heater Lab Data - ASTM E2780 / ASTM E2515

Manufacturer:	Hearth & Home	Equipment Numbers:	
Model:	Intrepiod IV Catalytic		
Tracking No.:	2264		
Project No.:	0135WS038E		
Run #:	3		
Date:	1/5/18		

TRAIN 1 (First Hour emissions)

Sample Component	Reagent	Filter, Probe or Dish #	Weights		
			Final, mg	Tare, mg	Particulate, mg
B. Front filter catch	Filter	D341	112.3	111.4	0.9
C. Rear filter catch	Filter				0.0
D. Probe catch*	Probe				0.0
E. Filter seals catch*	Seals				0.0

Sub-Total	Total Particulate, mg:	0.9

TRAIN 1 (Post First Hour Change-out)

Sample Component	Reagent	Filter, Probe or Dish #	Weights		
			Final, mg	Tare, mg	Particulate, mg
B. Front filter catch	Filter	D342	111.5	111.2	0.3
C. Rear filter catch	Filter	D343	112.1	112.1	0.0
D. Probe catch*	Probe	30	114329.5	114329.6	0.0
E. Filter seals catch*	Seals	R555	3308.1	3308.0	0.1

Sub-Total	Total Particulate, mg:	0.4
Train 1 Aggregate	Total Particulate, mg:	**1.3**

TRAIN 2

Sample Component	Reagent	Filter, Probe or Dish #	Weights		
			Final, mg	Tare, mg	Particulate, mg
A. Front filter catch	Filter	D344	112.2	111.5	0.7
B. Rear filter catch	Filter	D345	111.5	111.9	-0.4
C. Probe catch*	Probe	31	114369.1	114369.1	0.0
D. Filter seals catch*	Seals	R556	3303.5	3303.1	0.4

	Total Particulate, mg:	**0.7**

AMBIENT

Sample Component	Reagent	Filter # or Probe #	Weights		
			Final, mg	Tare, mg	Particulate, mg
A. Front filter catch*	Filter				0.0

	Total Particulate, mg:	**0.0**

*Particulate catch that results in a negative number, is assumed to be zero for probes and seals, negative numbers for filters are assumed to be part of the seal weight.

Component	Equations:
A. Front filter catch	Final (mg) - Tare (mg) = Particulate, mg
B. Rear filter catch	Final (mg) - Tare (mg) = Particulate, mg
C. Probe catch	Final (mg) - Tare (mg) = Particulate, mg

Technician Signature: 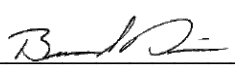

Wood Heater Test Results - ASTM E2780 / ASTM E2515

Manufacturer: Hearth & Home
Model: Intrepiod IV Catalytic
Project No.: 0135WS038E
Tracking No.: 2264
Run: 3
Test Date: 01/05/18

Burn Rate	**1.09 kg/hr dry**
Average Tunnel Temperature	93 degrees Fahrenheit
Average Gas Velocity in Dilution Tunnel - vs	13.23 feet/second
Average Gas Flow Rate in Dilution Tunnel - Qsd	8804.9 dscf/hour
Average Delta p	0.048 inches H20
Total Time of Test	177 minutes

	AMBIENT	SAMPLE TRAIN 1	SAMPLE TRAIN 2	FIRST HOUR FILTER (TRAIN 1)
Total Sample Volume - Vm	0.000 cubic feet	29.238 cubic feet	29.160 cubic feet	9.754 cubic feet
Average Gas Meter Temperature	72 degrees Fahrenheit	81 degrees Fahrenheit	82 degrees Fahrenheit	79 degrees Fahrenheit
Total Sample Volume (Standard Conditions) - Vmstd	0.000 dscf	28.239 dscf	28.214 dscf	9.466 dscf
Total Particulates - m_n	0 mg	1.3 mg	0.7 mg	0.9 mg
Particulate Concentration (dry-standard) - C_f/C_s	0.000000 grams/dscf	0.00005 grams/dscf	0.00002 grams/dscf	0.00010 grams/dscf
Total Particulate Emissions - E_T	0.00 grams	1.20 grams	0.64 grams	0.84 grams
Particulate Emission Rate	0.00 grams/hour	0.41 grams/hour	0.22 grams/hour	0.84 grams/hour
Emissions Factor		0.37 g/kg	0.20 g/kg	0.37 g/kg
Difference from Average Total Particulate Emissions		0.28 grams	0.28 grams	
	Dual Train Comparison Results Are Acceptable			

FINAL AVERAGE RESULTS

Complete Test Run	
Total Particulate Emissions - E_T	0.92 grams
Particulate Emission Rate	**0.31 grams/hour**
Emissions Factor	0.29 grams/kg
First Hour Emissions	
Total Particulate Emissions - E_T	0.84 grams
Particulate Emission Rate	0.84 grams/hour
Emissions Factor	0.37 grams/kg
7.5% of Average Total Particulate Emissions	0.07 grams

QUALITY CHECKS

Filter Temps < 90 °F	OK
Filter Face Velocity (47 mm)	OK
Dryer Exit Temp < 80F	OK
Leakage Rate	OK
Ambient Temp (55-90°F)	OK
Negative Probe Weight Eval.	NOT ACCEPTABLE
Pro-Rate Variation	OK
Stove Surface ΔT	OK
Train Precesion 7.5%	29.96
Train Precision 0.5g/kg	0.17

Technician Signature: 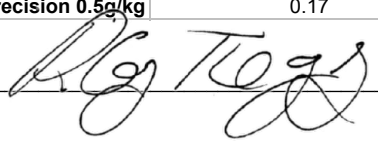

Wood Heater Lab Data - ASTM E2780 / ASTM E2515

Manufacturer:	Hearth & Home	Equipment Numbers:	
Model:	Intrepiod IV Catalytic		
Tracking No.:	2264		
Project No.:	0135WS038E		
Run #:	3		
Date:	1/5/18		

Uncorrected

TRAIN 1 (First Hour emissions)

Sample Component	Reagent	Filter, Probe or Dish #	Weights		
			Final, mg	Tare, mg	Particulate, mg
B. Front filter catch	Filter	D341	112.3	111.4	0.9
C. Rear filter catch	Filter				0.0
D. Probe catch*	Probe				0.0
E. Filter seals catch*	Seals				0.0

Sub-Total	Total Particulate, mg:	0.9

TRAIN 1 (Post First Hour Change-out)

Sample Component	Reagent	Filter, Probe or Dish #	Weights		
			Final, mg	Tare, mg	Particulate, mg
B. Front filter catch	Filter	D342	111.5	111.2	0.3
C. Rear filter catch	Filter	D343	112.1	112.1	0.0
D. Probe catch*	Probe	30	114329.5	114329.6	0.0
E. Filter seals catch*	Seals	R555	3308.1	3308.0	0.1

Sub-Total	Total Particulate, mg:	0.4
Train 1 Aggregate	Total Particulate, mg:	**1.3**

TRAIN 2

Sample Component	Reagent	Filter, Probe or Dish #	Weights		
			Final, mg	Tare, mg	Particulate, mg
A. Front filter catch	Filter	D344	112.2	111.5	0.7
B. Rear filter catch	Filter	D345	111.9	111.9	0.0
C. Probe catch*	Probe	31	114369.1	114369.1	0.0
D. Filter seals catch*	Seals	R556	3303.5	3303.1	0.4

	Total Particulate, mg:	**1.1**

AMBIENT

Sample Component	Reagent	Filter # or Probe #	Weights		
			Final, mg	Tare, mg	Particulate, mg
A. Front filter catch*	Filter				0.0

	Total Particulate, mg:	**0.0**

*Particulate catch that results in a negative number, is assumed to be zero for probes and seals, negative numbers for filters are assumed to be part of the seal weight.

Component	Equations:
A. Front filter catch	Final (mg) - Tare (mg) = Particulate, mg
B. Rear filter catch	Final (mg) - Tare (mg) = Particulate, mg
C. Probe catch	Final (mg) - Tare (mg) = Particulate, mg

Technician Signature: 

Wood Heater Test Results - ASTM E2780 / ASTM E2515

Manufacturer: Hearth & Home
Model: Intrepid IV Catalytic
Project No.: 0135WS038E
Tracking No.: 2264
Run: 3
Test Date: 01/05/18

Burn Rate	**1.09 kg/hr dry**
Average Tunnel Temperature	93 degrees Fahrenheit
Average Gas Velocity in Dilution Tunnel - vs	13.23 feet/second
Average Gas Flow Rate in Dilution Tunnel - Qsd	8804.9 dscf/hour
Average Delta p	0.048 inches H20
Total Time of Test	177 minutes

Uncorrected

	AMBIENT	SAMPLE TRAIN 1	SAMPLE TRAIN 2	FIRST HOUR FILTER (TRAIN 1)
Total Sample Volume - Vm	0.000 cubic feet	29.238 cubic feet	29.160 cubic feet	9.754 cubic feet
Average Gas Meter Temperature	72 degrees Fahrenheit	81 degrees Fahrenheit	82 degrees Fahrenheit	79 degrees Fahrenheit
Total Sample Volume (Standard Conditions) - Vmstd	0.000 dscf	28.239 dscf	28.214 dscf	9.466 dscf
Total Particulates - m_n	0 mg	1.3 mg	1.1 mg	0.9 mg
Particulate Concentration (dry-standard) - C_f/C_s	0.000000 grams/dscf	0.00005 grams/dscf	0.00004 grams/dscf	0.00010 grams/dscf
Total Particulate Emissions - E_T	0.00 grams	1.20 grams	1.01 grams	0.84 grams
Particulate Emission Rate	0.00 grams/hour	0.41 grams/hour	0.34 grams/hour	0.84 grams/hour
Emissions Factor		0.37 g/kg	0.32 g/kg	0.37 g/kg
Difference from Average Total Particulate Emissions		0.09 grams	0.09 grams	
	Dual Train Comparison Results Are Acceptable			

FINAL AVERAGE RESULTS

Complete Test Run	
Total Particulate Emissions - E_T	1.10 grams
Particulate Emission Rate	**0.37 grams/hour**
Emissions Factor	0.34 grams/kg
First Hour Emissions	
Total Particulate Emissions - E_T	0.84 grams
Particulate Emission Rate	0.84 grams/hour
Emissions Factor	0.37 grams/kg
7.5% of Average Total Particulate Emissions	0.08 grams

QUALITY CHECKS

Filter Temps < 90 °F	OK
Filter Face Velocity (47 mm)	OK
Dryer Exit Temp < 80F	OK
Leakage Rate	OK
Ambient Temp (55-90°F)	OK
Negative Probe Weight Eval.	NOT ACCEPTABLE
Pro-Rate Variation	OK
Stove Surface ΔT	OK
Train Precesion 7.5%	8.29
Train Precision 0.5g/kg	0.06

Technician Signature: _____

Wood Heater Efficiency Results - CSA B415.1

Manufacturer: Hearth & Home
Model: :repiod IV Catalytic
Date: 01/05/18
Run: 3
Control #: 0135WS038E
Test Duration: 177
Output Category: II

Technician Signature: 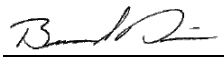

Test Results in Accordance with CSA B415.1-09

	HHV Basis	LHV Basis
Overall Efficiency	75.0%	81.0%
Combustion Efficiency	95.8%	95.8%
Heat Transfer Efficiency	78%	84.6%

Output Rate (kJ/h)	16,061	15,235	**(Btu/h)**
Burn Rate (kg/h)	1.08	2.38	**(lb/h)**
Input (kJ/h)	21,421	20,320	**(Btu/h)**

Test Load Weight (dry kg)	3.19	7.03	**dry lb**
MC wet (%)	17.28701406		
MC dry (%)	20.90		
Particulate (g)	0.31		
CO (g)	195		
Test Duration (h)	2.95		

Emissions	**Particulate**	**CO**
g/MJ Output	0.01	4.11
g/kg Dry Fuel	0.10	61.03
g/h	0.11	65.99
lb/MM Btu Output	0.02	9.55

Air/Fuel Ratio (A/F)	13.43

VERSION: **2.2** **12/14/2009**

OMNI-Test Laboratories, Inc. **ASTM E2780 Wood Heater Run Sheets**

Client: Hearth & Home Project Number: 0135WS038E Run Number: 3

Model: Intrepid IV Catalytic Tracking Number: 2264 Date: 1/5/18

Test Crew: B Davis

OMNI Equipment ID numbers:

ASTM E2515 Lab Sheet

Assembled By:

B Davis

Date/Time in Dessicator:

1/5/18 1510

	Weighing #1	Weighing #2	Weighing #3	Weighing #4	Weighing #5
	Date/Time: 1/9/18 0940	Date/Time: 1/10/18 0820	Date/Time:	Date/Time:	Date/Time:
	R/H %: 5.9	R/H %: 6.7	R/H %:	R/H %:	R/H %:
	Temp: 71.2	Temp: 68.9	Temp:	Temp:	Temp:
	200 mg Audit: 0.2000	200 mg Audit: 0.2000	200 mg Audit:	200 mg Audit:	200 mg Audit:
	2 g Audit: 2.0000	2 g Audit: 1.9999	2 g Audit:	2 g Audit:	2 g Audit:
	100 g Audit: 99.9979	100 g Audit 99.9980	100 g Audit	100 g Audit	100 g Audit
	Initials: BL	Initials: BL	Initials:	Initials:	Initials:

Train	Element	ID #	Tare (mg)	Weight (mg)	Weight (mg)	Weight (mg)	Weight (mg)	Weight (mg)
A (First Hour)	Front Filter	D341	111.4	112.4	112.3	✓		
	Rear Filter		1					
	Probe							
	O-Ring Set							
A (Remainder)	Front Filter	D342	111.2	111.7	111.5	✓		
	Rear Filter	D343	112.1	112.1	112.1	✓		
	Probe	30	114329.6	114329.5 ✓	114329.5	✓		
	O-Ring Set	R555	3308.0	3308.1	3308.1	✓		
B	Front Filter	D344	111.5	112.4	112.2	✓		
	Rear Filter	D345	111.9	111.5	111.5	✓		
	Probe	31	114369.1	114369.2	114369.1	✓		
	O-Ring Set	R556	3303.1	3303.5	3303.5	✓		
BG	Filter							

Technician Signature: B Davis Date: 1/23/18

OMNI-Test Laboratories, Inc. **ASTM E2780 Wood Heater Run Sheets**

Client: Hearth & Home Project Number: 0135WS038E Run Number: 3

Model: Intrepid IV Catalytic Tracking Number: 2264 Date: 1/5/18

Test Crew: B Davis

OMNI Equipment ID numbers:

Wood Heater Supplemental Data

Start Time: 11:39 Booth #: E 1

Stop Time: 14:36

Stack Gas Leak Check:

Initial: good Final: good

Sample Train Leak Check:

A: 0.0 @ 5 "Hg

B: 0.0 @ 7 "Hg

Calibrations: Span Gas CO_2: 16.74 CO: 4.20/901

	Pre Test		Post Test	
	Zero	Span	Zero	Span
Time	1112	1112	1440	1440
CO_2	0.01	16.75	0.01	16.76
CO	0.000/0	4.199/900	0.00/0	4204/901

Air Velocity (ft/min): Initial: <50 Final: <50

Scale Audit (lbs): Initial: 10.0 Final: 10.0

Pitot Tube Leak Test: Initial: good Final: good

Stack Diameter (in): 6"

Induced Draft: 0.0

% Smoke Capture: 100 %

Flue Pipe Cleaned Prior to First Test in Series:

Date: 1/3/18 Initials: BD

	Initial	Middle	Ending
P_b (in/Hg)	30.12	30.12	30.11
RH (%)	20.3	22.7	24.6
Ambient (°F)	73	73	69

Background Filter Volume: N/A

Tunnel Traverse		
Microtector Reading	dP (in H_2O)	T(°F)
1	.026	96
2	.040	96
3	.042	96
4	.044	96
1	.036	96
2	.028	96
3	048	96
4	.036	95
Center:		
	048	96

Tunnel Static Pressure (in H_2O):	
Beginning of Test	End of Test
-.18	-.19

Technician Signature: BD Date: 1/23/18

OMNI-Test Laboratories, Inc. **ASTM E2780 Wood Heater Run Sheets**

Client: Hearth & Home Project Number: 0135WS038E Run Number: 3

Model: Intrepid IV Catalytic Tracking Number: 2264 Date: 1/5/18

Test Crew: D Davis

OMNI Equipment ID numbers:

Wood Heater Fuel Data

Fuel: Douglas fir, untreated and air dried, standard grade or better dimensional lumber

Pre-Burn Fuel

Calibration: Cal Value (1) = 12% Actual Reading 12
Cal Value (2) = 22% Actual Reading 22

Piece:	Length:	Reading:	Piece:	Length:	Reading:
1	36 in	19.9	7	____ in	____
2	36 in	22.4	8	____ in	____
	____ ft	____	____	____	____
3	36 in	20.2	9	____ in	____
4	____ in	____	10	____ in	____
5	____ in	____	11	____ in	____
6	____ in	____	12	____ in	____

Total Pre-Burn Fuel Weight: 13.5 Pre-Burn Fuel Average Moisture: 20.83

Time (clock): 0835 Room Temperature (F): 69 Initials: BC

Test Fuel

Firebox Volume (ft³): 1.31 Test Fuel Piece Length (in): 13.5
Load Weight Range (lb): 8.25 - 9.17 - 10.08 Total Wet Fuel Load Weight (lb): 8.5

Fuel Type & Amount: 2 x 4: 5 4 x 4: Ø
Weight (with spacers): 8.5 Weight (with spacers): Ø

Piece:	Weight (lbs):	Moisture Readings (%DB):			Fuel Type:
1	1.4	22.5	22.0	22.2	2x4
2	1.2	19.2	20.3	19.9	2x4
3	1.3	20.3	21.6	22.0	2x4
4	1.2	22.4	21.4	22.6	2x4
5	1.3	19.3	18.6	19.2	2x4
6					
7					

Spacer Moisture Readings (%DB)

17.3	16.4	18.2	18.0	13.8			
13.9	15.3	15.4	14.9	14.8			
20.4	20.5	20.0	15.0				
22.8	22.0	22.0	16.2				

Technician Signature: 1110 Room Temperature (F): 70 Date: 1/23/18 Initials: BC

Time (clock): 0852

OMNI-Test Laboratories, Inc. **ASTM E2780 Wood Heater Run Sheets**

Client: Hearth & Home Project Number: 0135WS038E Run Number: 3

Model: Intrepid IV Catalytic Tracking Number: 2264 Date: 1/5/18

Test Crew: [illegible]

OMNI Equipment ID numbers:

Wood Heater Run Notes

Air Control Settings

Primary:

fully open, Pushed fully to the Left.

Secondary: fixed

Tertiary/Pilot: N/A

Fan: N/A

Preburn Notes

Time	Notes
10	Raked coals
30	Raked coals
51	Raked coals
70	Raked coals
91	Leveled coal bed

Test Notes

Sketch test fuel configuration:

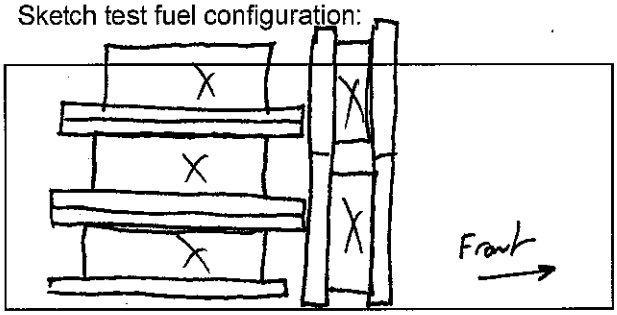

Start up procedures & Timeline:

Bypass: Closed by 55 Seconds
Fuel loaded by: 49 Seconds
Door closed at: 55 Seconds
Primary air: At test setting on/on test. Fully open.

Notes: N/A

Time	Notes
60	changed front filter in train A.

Technician Signature: [signature] Date: 1/23/18

Run 4

Wood Heater Preburn Data - ASTM E2780

Run:	**4**

Technician Signature:

Manufacturer:	Hearth & Home
Model:	Intrepiod IV Catalytic
Tracking No.:	2264
Project No.:	0135WS038E
Test Date:	1/8/18
Beginning Clock Time:	10:20

Preburn Fuel Data

Fuel Piece Lengths (in.):	6
Total Preburn Weight (lb):	13.8
Fuel Moisture Readings (% DB):	22.5
	22.2
	20
	23.2
	20.3
Avg Preburn Moisture (% DB):	**21.64**

Coal Bed Range (lb):	**1.7** (min)	**2.2** (max)

			Temperatures (°F)							
Elapsed Time (min)	Scale (lb)	Stack Draft (in H_2O)	FB Top	FB Bottom	FB Back	FB Left	FB Right	Avg. FB	Stack	Ambient
0	10	-0.072	390	157	368	255	234	280.8	797	70
1	9.8	-0.066	402	161	400	260	237	292	532	70
2	9.7	-0.062	401	165	429	266	239	300	451	70
3	9.6	-0.058	397	169	454	272	241	306.6	409	70
4	9.5	-0.055	393	173	476	277	243	312.4	386	70
5	9.4	-0.054	389	178	494	283	244	317.6	373	70
6	9.3	-0.053	387	182	512	288	245	322.8	366	70
7	9.2	-0.053	388	186	527	292	247	328	363	70
8	9.1	-0.053	392	190	542	296	248	333.6	360	70
9	9	-0.052	398	194	555	300	248	339	361	70
10	8.9	-0.052	409	198	566	303	249	345	362	70
11	8.8	-0.052	409	202	572	307	250	348	401	69
12	8.7	-0.053	405	206	587	310	250	351.6	377	70
13	8.6	-0.052	402	209	603	312	251	355.4	371	69
14	8.5	-0.052	401	213	619	315	251	359.8	369	69
15	8.3	-0.052	399	217	635	318	251	364	369	69
16	8.2	-0.052	401	220	649	321	252	368.6	369	69
17	8.1	-0.052	402	223	664	324	252	373	370	69
18	8	-0.051	404	227	677	327	252	377.4	370	69
19	7.9	-0.051	409	230	690	331	252	382.4	372	69
20	7.8	-0.051	414	232	700	335	253	386.8	374	69
21	7.7	-0.051	420	235	710	340	253	391.6	375	69
22	7.6	-0.052	430	238	718	345	254	397	376	69
23	7.5	-0.051	439	240	725	349	254	401.4	376	69
24	7.4	-0.052	448	243	731	355	255	406.4	377	68
25	7.3	-0.053	455	245	735	360	255	410	380	69
26	7.2	-0.05	462	247	739	365	256	413.8	382	69
27	7.2	-0.052	470	249	739	370	257	417	381	69
28	7.1	-0.052	484	251	736	376	257	420.8	381	69
29	7	-0.05	497	253	732	380	259	424.2	379	69
30	6.9	-0.052	517	255	729	385	260	429.2	381	69
31	6.8	-0.051	538	257	726	388	262	434.2	380	69
32	6.7	-0.051	556	259	723	392	264	438.8	381	69
33	6.4	-0.06	558	261	718	396	265	439.6	612	69
34	6.3	-0.057	564	263	720	402	268	443.4	458	69
35	6.1	-0.055	570	265	725	407	270	447.4	419	69
36	6	-0.055	575	267	731	412	273	451.6	405	69
37	5.9	-0.053	580	269	738	416	275	455.6	397	69
38	5.8	-0.053	590	271	743	421	278	460.6	393	69

Wood Heater Preburn Data - ASTM E2780

Run: 4

Technician Signature:

Manufacturer:	Hearth & Home
Model:	Intrepiod IV Catalytic
Tracking No.:	2264
Project No.:	0135WS038E
Test Date:	1/8/18
Beginning Clock Time:	10:20

Preburn Fuel Data

Fuel Piece Lengths (in.):	6
Total Preburn Weight (lb):	13.8
Fuel Moisture Readings (% DB):	22.5
	22.2
	20
	23.2
	20.3
Avg Preburn Moisture (% DB):	**21.64**

Coal Bed Range (lb):	**1.7** (min)	**2.2** (max)

			Temperatures (°F)							
Elapsed Time (min)	Scale (lb)	Stack Draft (in H_2O)	FB Top	FB Bottom	FB Back	FB Left	FB Right	Avg. FB	Stack	Ambient
39	5.7	-0.053	596	273	748	426	280	464.6	392	69
40	5.6	-0.052	603	275	752	430	283	468.6	390	69
41	5.5	-0.053	606	277	756	435	286	472	386	69
42	5.4	-0.052	609	278	759	438	289	474.6	384	69
43	5.3	-0.053	612	280	762	441	292	477.4	387	69
44	5.2	-0.051	614	282	764	445	294	479.8	386	69
45	5.1	-0.051	615	284	766	447	297	481.8	387	69
46	5	-0.052	615	285	768	449	300	483.4	389	69
47	4.9	-0.051	615	287	767	451	303	484.6	390	69
48	4.8	-0.051	619	289	765	452	305	486	388	69
49	4.8	-0.051	620	291	761	454	308	486.8	385	69
50	4.7	-0.05	621	293	756	455	310	487	382	69
51	7.6	-0.117	614	295	742	457	313	484.2	486	69
52	4.3	-0.055	604	296	737	459	316	482.4	453	69
53	4.2	-0.056	623	298	736	459	319	487	405	69
54	4	-0.053	644	299	738	460	323	492.8	393	69
55	3.9	-0.052	663	300	742	460	327	498.4	388	69
56	3.8	-0.051	678	301	748	461	331	503.8	386	69
57	3.7	-0.052	695	302	754	461	335	509.4	384	69
58	3.6	-0.05	706	303	759	462	339	513.8	386	69
59	3.5	-0.051	713	304	763	462	343	517	383	69
60	3.4	-0.051	720	304	770	462	347	520.6	392	70
61	3.3	-0.053	725	305	776	462	351	523.8	398	69
62	3.2	-0.052	728	305	779	462	355	525.8	397	69
63	3.2	-0.05	726	306	776	462	358	525.6	389	70
64	3.1	-0.048	721	306	769	462	363	524.2	382	69
65	3	-0.047	716	306	760	462	367	522.2	374	69
66	3	-0.046	710	307	750	462	370	519.8	369	69
67	2.9	-0.046	703	307	740	462	374	517.2	363	69
68	2.9	-0.045	694	307	729	461	378	513.8	357	69
69	2.8	-0.046	687	307	718	461	382	511	353	70
70	2.8	-0.044	680	307	706	461	386	508	347	69
71	2.7	-0.044	657	308	692	460	389	501.2	394	69
72	2.6	-0.043	638	308	684	459	392	496.2	354	69
73	2.6	-0.043	630	308	677	458	395	493.6	342	69
74	2.6	-0.042	619	308	671	457	396	490.2	337	69
75	2.5	-0.041	608	308	665	457	398	487.2	333	70
76	2.5	-0.042	598	308	659	456	399	484	333	69
77	2.5	-0.041	590	308	655	456	400	481.8	329	69

Wood Heater Preburn Data - ASTM E2780

Run:	**4**

Technician Signature: 

Manufacturer:	Hearth & Home
Model:	Intrepiod IV Catalytic
Tracking No.:	2264
Project No.:	0135WS038E
Test Date:	1/8/18
Beginning Clock Time:	10:20

Preburn Fuel Data

Fuel Piece Lengths (in.):	6
Total Preburn Weight (lb):	13.8
Fuel Moisture Readings (% DB):	22.5
	22.2
	20
	23.2
	20.3
Avg Preburn Moisture (% DB):	**21.64**

Coal Bed Range (lb):	**1.7** (min)	**2.2** (max)

			Temperatures (°F)							
Elapsed Time (min)	Scale (lb)	Stack Draft (in H_2O)	FB Top	FB Bottom	FB Back	FB Left	FB Right	Avg. FB	Stack	Ambient
78	2.4	-0.04	580	308	652	455	401	479.2	325	69
79	2.4	-0.04	573	308	648	455	401	477	325	69
80	2.4	-0.04	569	308	644	454	401	475.2	322	69
81	2.3	-0.039	563	309	642	454	402	474	320	69
82	2.3	-0.039	559	309	638	453	402	472.2	320	69
83	2.3	-0.039	554	309	634	453	401	470.2	317	70
84	2.3	-0.038	551	310	630	453	401	469	316	70
85	2.2	-0.038	548	310	627	452	401	467.6	317	69
86	2.2	-0.038	546	311	624	452	400	466.6	314	70
87	2.2	-0.037	544	311	620	452	400	465.4	314	69
88	2.2	-0.037	542	311	616	452	399	464	313	70
89	2.1	-0.037	541	312	613	451	399	463.2	313	69
90	2.1	-0.037	540	313	609	451	399	462.4	311	68
91	2.1	-0.037	540	313	605	450	398	461.2	312	69

Wood Heater Test Fuel Data - ASTM E2780

Manufacturer:	Hearth & Home
Model:	Intrepiod IV Catalytic
Tracking No.:	2264
Project No.:	0135WS038E
Test Date:	1/8/2018
Run No.:	4

Firebox Volume (ft^3):	1.31
Fuel Piece Length (in):	13.5
2x4 Crib Weight (lb):	8.7
4x4 Crib Weight (lb):	0

Total Fuel Weight (Dry Basis, lb):	7.3	
Fuel Density (lb/ft^3, Dry Basis):	27.79	OK
Loading Density (lb/ft^3, Wet Basis):	6.64	OK
2x4 Percentage:	N/A	N/A

Coal Bed Range (20-25%): **1.74 - 2.175**

Test Fuel Piece	Weight (lb)	Size	Readings (Dry Basis %)			Dry Weight (lb)
1	1.4	2"x 4"	21.5	22.2	21.9	1.15
2	1.4	2"x 4"	21.0	21.4	22.1	1.15
3	1.4	2"x 4"	21.1	21.9	21.1	1.15
4	1.4	2"x 4"	21.6	21.5	20.5	1.16
5	1.3	2"x 4"	19.3	20.1	18.9	1.09

Spacer Readings (Dry Basis %)			
15.2	12.0		
13.9	12.0		
11.2	12.7		
9.5	12.0		
11.4	9.2		
12.0			
12.7			
9.7			
13.6			
12.9			
12.7			
12.3			
9.4			

Technician Signature: 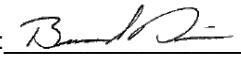

Wood Heater Test Data - ASTM E2780 / ASTM E2515

Run: 4

Manufacturer: Hearth & Home
Model: Intrepiod IV Catalytic
Tracking No.: 2264
Project No.: 0135WS038E
Test Date: 08-Jan-18
Beginning Clock Time: 11:52

Total Sampling Time: 173 min
Recording Interval: 1 min
Background Sample Volume: _____ cubic feet

Meter Box Y Factor: 0.981 (1) 0.984 (2) _____ (Amb)

Barometric Pressure:

Begin	Middle	End	Average
29.89	29.82	29.78	29.83 "Hg

OMNI Equipment Numbers: _____

PM Control Modules: 0035, 0036
Dilution Tunnel MW(dry): 29.00 lb/lb-mole
Dilution Tunnel MW(wet): 28.78 lb/lb-mole
Dilution Tunnel H2O: 2.00 percent
Dilution Tunnel Static: -0.180 "H2O
Tunnel Area: 0.19635 ft2
Pitot Tube Cp: 0.99

Avg. Tunnel Velocity: 14.04 ft/sec.
Initial Tunnel Flow: 152.8 scfm
Average Tunnel Flow: 154.1 scfm
Post-Test Leak Check (1): 0.000 cfm @ 7 in. Hg
Post-Test Leak Check (2): 0.000 cfm @ 7 in. Hg
Average Test Piece Fuel Moisture: 21.07 Dry Basis %

Technician Signature: _____

Velocity Traverse Data

	Pt.1	Pt.2	Pt.3	Pt.4	Pt.5	Pt.6	Pt.7	Pt.8	Center	
Initial dP	0.032	0.050	0.052	0.034	0.030	0.050	0.050	0.040	0.050	"H2O
Temp:	92	92	91	91	91	91	91	91	91	°F

V_{strav} 14.00 ft/sec V_{scent} 15.15 ft/sec F_p 0.924

	Particulate Sampling Data														Fuel Weight (lb)		Temperature Data (°F)												Stack Gas Data		
Elapsed Time (min)	Gas Meter 1 (ft^3)	Gas Meter 2 (ft^3)	Sample Rate 1 (cfm)	Sample Rate 2 (cfm)	Orifice dH 1 ("H_2O)	Meter 1 Temp (°F)	Meter 1 Vacuum ("Hg)	Orifice dH 2 ("H_2O)	Meter 2 Temp (°F)	Meter 2 Vacuum ("Hg)	Dilution Tunnel (°F)	Dilution Tunnel Center dP	Pro. Rate 1	Pro. Rate 2	Scale Reading	Weight Change	Firebox Top	Firebox Bottom	Firebox Back	Firebox Left	Firebox Right	Avg. Stove Surface	Catalyst Exit	Stack	Filter 1	Dryer Exit 1	Filter 2	Dryer Exit 2	Ambient	Draft ("H_2O)	CO_2 (%)	CO (%)
0	0.000	0.000			0.92	73	1.72	0.63	73	1.1	97	0.050			8.7		537	314	594	450	397	458	934	290	69	71	69	72	68	-0.035	5.91	0.06
1	0.161	0.163	0.16	0.16	1.34	73	1.95	1.15	73	1.1	135	0.050	102	103	8.7	0	519	315	585	451	397	453	901	298	69	73	69	72	69	-0.074	1.48	0.14
2	0.325	0.327	0.16	0.16	1.36	73	1.96	1.15	73	1.1	98	0.050	101	100	8.6	-0.1	495	316	584	449	395	448	1020	280	69	73	69	72	68	-0.036	7.84	0.04
3	0.490	0.492	0.17	0.17	1.38	73	1.99	1.15	73	1.1	91	0.050	101	100	8.5	-0.1	478	317	584	448	394	444	1043	273	69	73	69	72	68	-0.037	7.58	0.04
4	0.657	0.657	0.17	0.17	1.38	73	1.99	1.15	73	1.1	89	0.050	102	100	8.5	0	463	317	585	445	392	440	1050	275	69	73	69	72	67	-0.038	7.38	0.1
5	0.823	0.822	0.17	0.17	1.38	73	1.99	1.15	73	1.1	88	0.050	101	100	8.4	-0.1	456	318	588	444	390	439	1060	281	69	73	69	72	68	-0.039	7.73	0.13
6	0.990	0.986	0.17	0.16	1.39	73	1.99	1.15	73	1.1	88	0.050	102	100	8.3	-0.1	448	318	591	441	387	437	1067	287	68	73	68	72	67	-0.040	7.9	0.12
7	1.156	1.151	0.17	0.17	1.38	73	1.99	1.15	73	1.1	88	0.050	101	100	8.3	0	442	318	595	438	385	436	1074	292	68	73	68	72	68	-0.039	8.18	0.14
8	1.322	1.317	0.17	0.17	1.37	73	2.02	1.14	73	1.1	87	0.050	101	101	8.2	-0.1	437	319	598	435	382	434	1085	296	68	72	68	72	67	-0.041	8.45	0.11
9	1.487	1.481	0.17	0.16	1.37	73	2.01	1.14	73	1.1	88	0.050	100	100	8.1	-0.1	434	319	602	432	378	433	1092	299	69	72	69	72	67	-0.042	8.36	0.11
10	1.652	1.645	0.17	0.16	1.36	73	2	1.14	73	1.1	87	0.050	100	99	8.0	-0.1	430	318	606	429	375	432	1105	302	69	72	69	71	68	-0.042	8.47	0.12
11	1.817	1.809	0.17	0.16	1.36	73	2.01	1.14	73	1.1	89	0.050	100	100	7.9	-0.1	432	319	611	426	372	432	1134	309	69	72	69	71	68	-0.042	9.59	0.13
12	1.982	1.973	0.17	0.16	1.36	73	2	1.14	73	1.1	89	0.050	100	100	7.9	0	443	320	616	424	369	434	1157	315	69	72	69	71	69	-0.042	9.42	0.36
13	2.147	2.137	0.17	0.16	1.36	73	2	1.14	74	1.1	90	0.050	100	100	7.8	-0.1	456	320	621	422	366	437	1164	320	69	72	69	71	68	-0.043	9.32	0.39
14	2.312	2.301	0.17	0.16	1.36	73	2.01	1.14	74	1.1	90	0.050	100	100	7.7	-0.1	467	320	626	421	362	439	1204	326	69	72	69	71	68	-0.044	9.99	0.28
15	2.477	2.465	0.17	0.16	1.36	73	2.01	1.14	74	1.1	90	0.050	100	100	7.6	-0.1	470	320	633	419	359	440	1204	331	69	72	69	71	69	-0.045	9.06	0.44
16	2.642	2.629	0.17	0.16	1.36	73	2.01	1.13	74	1.1	90	0.050	100	100	7.4	-0.2	471	319	637	418	357	440	1177	331	69	71	69	71	68	-0.045	8.92	0.38
17	2.806	2.792	0.16	0.16	1.36	74	2	1.13	74	1.1	90	0.050	100	99	7.3	-0.1	485	319	642	416	354	443	1233	335	70	71	69	71	68	-0.045	10.66	0.34
18	2.971	2.956	0.17	0.16	1.36	74	2.01	1.13	74	1.1	90	0.050	100	100	7.2	-0.1	504	319	647	414	352	447	1287	341	70	71	69	71	68	-0.047	11.11	0.26
19	3.136	3.120	0.17	0.16	1.35	74	2.02	1.13	74	1.2	91	0.050	100	100	7.1	-0.1	513	318	655	412	349	449	1344	346	70	71	69	70	68	-0.049	12.45	0.56
20	3.301	3.284	0.17	0.16	1.35	74	2.01	1.13	74	1.1	91	0.050	100	100	6.9	-0.2	528	318	664	411	347	454	1360	352	70	71	69	70	68	-0.049	12.86	0.51
21	3.465	3.447	0.16	0.16	1.35	74	2.01	1.13	74	1.1	92	0.050	100	99	6.8	-0.1	547	317	673	408	345	458	1384	355	70	71	69	70	69	-0.050	13.07	0.61
22	3.630	3.611	0.17	0.16	1.36	74	2.01	1.13	75	1.2	92	0.050	100	100	6.7	-0.1	561	316	682	407	344	462	1390	359	70	71	70	70	69	-0.049	13.17	0.5
23	3.794	3.774	0.16	0.16	1.35	74	2.01	1.13	75	1.1	92	0.050	100	99	6.6	-0.1	573	315	692	405	343	466	1417	360	70	71	70	70	69	-0.050	13.3	0.62
24	3.959	3.938	0.17	0.16	1.34	74	2.01	1.13	75	1.1	92	0.050	100	100	6.4	-0.2	584	315	702	403	342	469	1428	361	70	71	70	70	69	-0.050	13.21	0.57
25	4.123	4.101	0.16	0.16	1.35	75	2.01	1.13	75	1.2	93	0.050	100	99	6.3	-0.1	594	314	712	401	341	472	1440	365	70	71	70	70	69	-0.050	13.36	0.59
26	4.287	4.265	0.16	0.16	1.35	75	2.01	1.12	75	1.2	93	0.050	100	100	6.2	-0.1	604	313	722	400	340	476	1451	366	70	71	70	70	70	-0.050	13.23	0.67
27	4.452	4.429	0.17	0.16	1.34	75	2.01	1.13	75	1.1	94	0.050	100	100	6.0	-0.2	613	313	731	398	339	479	1457	367	70	71	70	70	70	-0.051	13.42	0.58
28	4.616	4.592	0.16	0.16	1.35	75	2.01	1.12	75	1.1	94	0.050	100	99	5.9	-0.1	618	312	740	396	338	481	1464	370	71	71	70	70	69	-0.050	13.5	0.58
29	4.780	4.755	0.16	0.16	1.36	75	2.01	1.13	76	1.2	95	0.050	100	99	5.8	-0.1	628	311	750	394	338	484	1465	369	71	71	70	70	70	-0.050	13.49	0.66
30	4.945	4.919	0.17	0.16	1.35	75	2.01	1.13	76	1.2	96	0.050	101	100	5.7	-0.1	631	310	758	393	337	486	1461	369	71	71	71	70	70	-0.050	13.56	0.51
31	5.110	5.083	0.17	0.16	1.35	75	2.01	1.12	76	1.2	96	0.050	101	100	5.5	-0.2	632	309	765	391	336	487	1468	370	71	71	71	70	70	-0.050	13.37	0.54
32	5.274	5.247	0.16	0.16	1.35	76	2.01	1.13	76	1.1	95	0.050	100	100	5.4	-0.1	633	308	773	390	336	488	1482	371	71	71	71	70	69	-0.051	13.29	0.63
33	5.439	5.410	0.17	0.16	1.35	76	2	1.12	76	1.1	96	0.050	100	99	5.3	-0.1	634	307	780	389	335	489	1490	373	71	71	71	70	70	-0.050	13.58	0.78
34	5.604	5.574	0.17	0.16	1.35	76	2.01	1.13	76	1.1	96	0.050	100	100	5.2	-0.1	637	306	786	387	335	490	1498	372	71	71	71	70	70	-0.050	13.76	0.94
35	5.769	5.737	0.17	0.16	1.34	76	2.01	1.13	77	1.1	96	0.050	100	99	5.0	-0.2	640	305	792	387	335	492	1504	371	71	71	71	70	70	-0.049	13.82	1.02
36	5.934	5.901	0.17	0.16	1.34	76	2.01	1.13	77	1.2	96	0.050	100	100	4.9	-0.1	642	304	798	386	335	493	1510	369	72	71	71	70	70	-0.050	13.78	1.03

Wood Heater Test Data - ASTM E2780 / ASTM E2515

Run: 4

Manufacturer: Hearth & Home
Model: Intrepiod IV Catalytic
Tracking No.: 2264
Project No.: 0135WS038E
Test Date: 08-Jan-18
Beginning Clock Time: 11:52

Total Sampling Time: 173 min
Recording Interval: 1 min
Background Sample Volume: _____ cubic feet

Meter Box Y Factor: 0.981 (1) 0.984 (2) _____ (Amb)

Barometric Pressure:	Begin	Middle	End	Average
	29.89	29.82	29.78	29.83 "Hg

OMNI Equipment Numbers: _____

PM Control Modules: 0035, 0036
Dilution Tunnel MW(dry): 29.00 lb/lb-mole
Dilution Tunnel MW(wet): 28.78 lb/lb-mole
Dilution Tunnel H2O: 2.00 percent
Dilution Tunnel Static: -0.180 "H2O
Tunnel Area: 0.19635 ft2
Pitot Tube Cp: 0.99

Avg. Tunnel Velocity: 14.04 ft/sec.
Initial Tunnel Flow: 152.8 scfm
Average Tunnel Flow: 154.1 scfm
Post-Test Leak Check (1): 0.000 cfm @ 7 in. Hg
Post-Test Leak Check (2): 0.000 cfm @ 7 in. Hg
Average Test Piece Fuel Moisture: 21.07 Dry Basis %

Technician Signature: _____

Velocity Traverse Data	Pt.1	Pt.2	Pt.3	Pt.4	Pt.5	Pt.6	Pt.7	Pt.8	Center	
Initial dP	0.032	0.050	0.052	0.034	0.030	0.050	0.050	0.040	0.050	"H2O
Temp:	92	92	91	91	91	91	91	91	91	°F

V_{strav} 14.00 ft/sec V_{scent} 15.15 ft/sec F_p 0.924

	Particulate Sampling Data														Fuel Weight (lb)		Temperature Data (°F)												Stack Gas Data		
Elapsed Time (min)	Gas Meter 1 (ft^3)	Gas Meter 2 (ft^3)	Sample Rate 1 (cfm)	Sample Rate 2 (cfm)	Orifice dH 1 ("H_2O)	Meter 1 Temp (°F)	Meter 1 Vacuum ("Hg)	Orifice dH 2 ("H_2O)	Meter 2 Temp (°F)	Meter 2 Vacuum ("Hg)	Dilution Tunnel (°F)	Dilution Tunnel Center dP	Pro. Rate 1	Pro. Rate 2	Scale Reading	Weight Change	Firebox Top	Firebox Bottom	Firebox Back	Firebox Left	Firebox Right	Avg. Stove Surface	Catalyst Exit	Stack	Filter 1	Dryer Exit 1	Filter 2	Dryer Exit 2	Ambient	Draft ("H_2O)	CO_2 (%)	CO (%)
37	6.098	6.065	0.16	0.16	1.35	76	2.01	1.13	77	1.2	96	0.050	100	100	4.8	-0.1	642	303	803	385	335	494	1512	369	72	71	72	70	70	-0.050	13.92	1.01
38	6.263	6.229	0.17	0.16	1.34	76	2.01	1.12	77	1.2	96	0.050	100	100	4.7	-0.1	639	303	809	384	335	494	1513	370	72	71	72	70	70	-0.049	13.83	0.96
39	6.428	6.392	0.17	0.16	1.34	77	2.01	1.12	77	1.2	97	0.050	100	99	4.6	-0.1	631	302	814	383	335	493	1516	372	72	71	72	70	70	-0.050	13.82	1.04
40	6.593	6.555	0.17	0.16	1.34	77	2.01	1.13	77	1.2	97	0.050	100	99	4.4	-0.2	627	301	819	383	336	493	1516	372	72	71	72	70	70	-0.050	13.55	1.05
41	6.757	6.719	0.16	0.16	1.34	77	2.01	1.12	77	1.2	98	0.050	100	100	4.3	-0.1	626	300	823	383	337	494	1513	372	72	71	72	70	70	-0.049	14.01	1.36
42	6.922	6.884	0.17	0.17	1.34	77	2.01	1.16	78	1.2	98	0.050	100	100	4.2	-0.1	627	299	827	383	337	495	1502	372	72	72	72	70	70	-0.049	13.87	1.82
43	7.087	7.051	0.17	0.17	1.35	77	2.01	1.16	78	1.2	98	0.050	100	101	4.1	-0.1	629	298	829	383	339	496	1501	373	72	72	72	70	71	-0.049	13.84	1.82
44	7.251	7.217	0.16	0.17	1.35	77	2.01	1.17	78	1.2	98	0.050	100	101	3.9	-0.2	632	297	831	383	340	497	1497	373	73	72	72	70	71	-0.049	13.86	1.84
45	7.416	7.384	0.17	0.17	1.35	77	2.02	1.16	78	1.2	98	0.050	100	101	3.8	-0.1	638	296	833	384	342	499	1500	373	73	72	72	70	71	-0.049	13.86	1.74
46	7.581	7.550	0.17	0.17	1.35	78	2.01	1.16	78	1.2	98	0.050	100	101	3.7	-0.1	644	296	835	385	343	501	1492	373	73	72	73	70	71	-0.050	13.78	2
47	7.746	7.716	0.17	0.17	1.35	78	2.01	1.15	78	1.2	98	0.050	100	101	3.6	-0.1	649	295	836	385	345	502	1488	372	73	72	73	70	71	-0.049	13.85	2.03
48	7.911	7.883	0.16	0.17	1.35	78	2.02	1.16	78	1.2	98	0.050	100	101	3.4	-0.2	653	294	837	386	347	503	1485	371	73	72	73	71	71	-0.049	13.74	2.04
49	8.076	8.049	0.17	0.17	1.35	78	2.01	1.15	79	1.2	98	0.050	100	101	3.3	-0.1	659	294	837	387	349	505	1488	371	73	72	73	71	71	-0.049	13.57	1.8
50	8.241	8.215	0.16	0.17	1.35	78	2.01	1.16	79	1.2	99	0.050	100	101	3.2	-0.1	663	293	838	388	351	507	1490	371	73	72	73	71	71	-0.047	13.73	1.67
51	8.406	8.381	0.17	0.17	1.35	78	2.01	1.16	79	1.2	98	0.050	100	101	3.1	-0.1	667	292	839	389	353	508	1484	373	73	72	73	71	71	-0.049	13.82	1.76
52	8.571	8.547	0.16	0.17	1.34	78	2.01	1.16	79	1.2	98	0.050	100	101	3.0	-0.1	671	292	839	390	356	510	1484	371	73	72	73	71	71	-0.048	13.78	1.7
53	8.737	8.714	0.17	0.17	1.35	78	2.01	1.16	79	1.2	98	0.050	101	101	2.9	-0.1	676	291	839	391	358	511	1485	372	73	72	73	71	71	-0.049	13.79	1.66
54	8.902	8.880	0.16	0.17	1.35	79	2.02	1.16	79	1.2	99	0.050	100	101	2.8	-0.1	681	291	840	392	361	513	1484	371	73	72	73	71	71	-0.048	13.71	1.58
55	9.068	9.046	0.17	0.17	1.34	79	2.01	1.16	79	1.2	99	0.050	101	101	2.7	-0.1	687	290	840	394	363	515	1485	372	74	72	73	71	71	-0.049	13.78	1.52
56	9.233	9.213	0.17	0.17	1.33	79	2.01	1.16	79	1.2	99	0.050	100	101	2.6	-0.1	689	290	841	396	365	516	1485	374	74	72	74	71	71	-0.048	13.66	1.39
57	9.398	9.379	0.16	0.17	1.35	79	2.01	1.16	79	1.2	98	0.050	100	101	2.5	-0.1	693	289	841	397	368	518	1482	372	74	72	74	71	71	-0.047	13.64	0.87
58	9.563	9.546	0.17	0.17	1.34	79	2	1.16	80	1.2	99	0.050	100	101	2.4	-0.1	693	289	842	399	370	519	1460	372	74	72	74	71	71	-0.047	13.24	0.41
59	9.728	9.712	0.16	0.17	1.35	79	2.01	1.17	80	1.2	98	0.050	100	100	2.3	-0.1	695	288	843	401	373	520	1434	372	74	72	74	71	71	-0.046	12.93	0.17
60	9.893	9.879	0.17	0.17	1.34	79	2	1.16	80	1.2	98	0.050	100	101	2.2	-0.1	700	288	842	402	375	521	1394	368	74	73	74	71	72	-0.046	12	0.05
61	10.059	10.046	0.17	0.17	1.35	79	2.01	1.16	80	1.2	98	0.050	101	101	2.2	0	706	287	840	404	378	523	1356	367	74	73	74	71	72	-0.045	11.17	0.01
62	10.226	10.212	0.17	0.17	1.41	79	1.86	1.15	80	1.2	99	0.050	101	100	2.1	-0.1	711	287	837	406	379	524	1332	365	74	73	74	71	71	-0.045	10.59	0.02
63	10.393	10.378	0.17	0.17	1.34	80	2.01	1.16	80	1.2	98	0.050	101	100	2.1	0	708	286	833	407	381	523	1299	365	75	73	74	71	72	-0.045	10.12	0.01
64	10.559	10.545	0.17	0.17	1.34	80	2.01	1.15	80	1.2	98	0.050	100	101	2.0	-0.1	704	286	828	408	382	522	1259	363	76	73	74	71	72	-0.044	9.25	0.02
65	10.724	10.711	0.17	0.17	1.34	80	2.01	1.15	80	1.2	98	0.050	100	100	2.0	0	697	285	822	409	384	519	1227	362	76	73	74	71	72	-0.043	8.72	0.03
66	10.890	10.878	0.17	0.17	1.34	80	2	1.16	80	1.2	97	0.050	100	101	1.9	-0.1	688	285	815	411	385	517	1200	359	76	73	74	71	72	-0.044	8.45	0.03
67	11.055	11.044	0.16	0.17	1.34	80	2.01	1.16	81	1.2	98	0.050	100	100	1.9	0	682	285	807	411	386	514	1171	356	76	73	74	72	71	-0.045	7.82	0.04
68	11.221	11.211	0.17	0.17	1.34	80	2.01	1.16	81	1.2	98	0.050	100	101	1.9	0	676	284	798	412	388	512	1145	355	76	73	74	72	72	-0.044	7.39	0.06
69	11.386	11.377	0.16	0.17	1.35	80	2.01	1.16	81	1.2	98	0.050	100	100	1.9	0	668	284	790	413	388	509	1120	353	76	73	74	72	71	-0.042	7.11	0.08
70	11.552	11.544	0.17	0.17	1.35	80	2.01	1.16	81	1.2	98	0.050	100	101	1.8	-0.1	659	284	780	413	389	505	1098	352	76	73	74	72	72	-0.043	7.13	0.08
71	11.717	11.710	0.17	0.17	1.35	80	2.01	1.16	81	1.2	97	0.050	100	100	1.8	0	652	283	771	414	390	502	1078	352	76	73	74	72	71	-0.044	6.9	0.09
72	11.883	11.877	0.17	0.17	1.35	80	2.01	1.16	81	1.2	97	0.050	100	101	1.8	0	644	283	761	414	391	499	1056	352	76	73	74	72	72	-0.042	6.68	0.11
73	12.049	12.044	0.17	0.17	1.35	81	2	1.16	81	1.2	97	0.050	100	101	1.8	0	637	282	751	414	392	495	1038	351	76	73	74	72	72	-0.042	6.56	0.12

Wood Heater Test Data - ASTM E2780 / ASTM E2515

Run: 4

Manufacturer: Hearth & Home
Model: Intrepiod IV Catalytic
Tracking No.: 2264
Project No.: 0135WS038E
Test Date: 08-Jan-18
Beginning Clock Time: 11:52

Total Sampling Time: 173 min
Recording Interval: 1 min
Background Sample Volume: _____ cubic feet

Meter Box Y Factor: 0.981 (1) 0.984 (2) _____ (Amb)

Barometric Pressure:	Begin	Middle	End	Average
	29.89	29.82	29.78	29.83 "Hg

OMNI Equipment Numbers: _____

PM Control Modules: 0035, 0036
Dilution Tunnel MW(dry): 29.00 lb/lb-mole
Dilution Tunnel MW(wet): 28.78 lb/lb-mole
Dilution Tunnel H2O: 2.00 percent
Dilution Tunnel Static: -0.180 "H2O
Tunnel Area: 0.19635 ft2
Pitot Tube Cp: 0.99

Avg. Tunnel Velocity: 14.04 ft/sec.
Initial Tunnel Flow: 152.8 scfm
Average Tunnel Flow: 154.1 scfm
Post-Test Leak Check (1): 0.000 cfm @ 7 in. Hg
Post-Test Leak Check (2): 0.000 cfm @ 7 in. Hg
Average Test Piece Fuel Moisture: 21.07 Dry Basis %

Technician Signature: _____

Velocity Traverse Data	Pt.1	Pt.2	Pt.3	Pt.4	Pt.5	Pt.6	Pt.7	Pt.8	Center	
Initial dP	0.032	0.050	0.052	0.034	0.030	0.050	0.050	0.040	0.050	"H2O
Temp:	92	92	91	91	91	91	91	91	91	°F

V_{strav} 14.00 ft/sec V_{scent} 15.15 ft/sec F_p 0.924

	Particulate Sampling Data														Fuel Weight (lb)		Temperature Data (°F)												Stack Gas Data		
Elapsed Time (min)	Gas Meter 1 (ft^3)	Gas Meter 2 (ft^3)	Sample Rate 1 (cfm)	Sample Rate 2 (cfm)	Orifice dH 1 ("H_2O)	Meter 1 Temp (°F)	Meter 1 Vacuum ("Hg)	Orifice dH 2 ("H_2O)	Meter 2 Temp (°F)	Meter 2 Vacuum ("Hg)	Dilution Tunnel (°F)	Dilution Tunnel Center dP	Pro. Rate 1	Pro. Rate 2	Scale Reading	Weight Change	Firebox Top	Firebox Bottom	Firebox Back	Firebox Left	Firebox Right	Avg. Stove Surface	Catalyst Exit	Stack	Filter 1	Dryer Exit 1	Filter 2	Dryer Exit 2	Ambient	Draft ("H_2O)	CO_2 (%)	CO (%)
74	12.215	12.211	0.17	0.17	1.35	81	2.01	1.16	81	1.2	96	0.050	100	101	1.7	-0.1	632	282	741	415	393	493	1021	347	75	73	74	72	71	-0.041	6.47	0.12
75	12.381	12.377	0.17	0.17	1.35	81	2.01	1.16	81	1.2	96	0.050	100	100	1.7	0	627	282	732	415	394	490	1005	343	75	73	74	72	72	-0.040	6.26	0.14
76	12.546	12.544	0.16	0.17	1.35	81	2.01	1.16	81	1.2	96	0.050	100	101	1.7	0	621	282	722	415	394	487	990	341	75	73	74	72	72	-0.041	6.19	0.15
77	12.712	12.711	0.17	0.17	1.35	81	2.01	1.16	81	1.2	96	0.050	100	101	1.7	0	617	281	713	415	395	484	975	340	75	73	74	72	72	-0.040	6.13	0.16
78	12.878	12.878	0.17	0.17	1.35	81	2	1.16	82	1.2	96	0.050	100	100	1.7	0	612	281	704	415	396	482	962	338	75	73	74	72	72	-0.039	6.04	0.16
79	13.044	13.045	0.17	0.17	1.35	81	2.01	1.16	82	1.2	96	0.050	100	100	1.6	-0.1	606	281	695	415	397	479	949	336	75	73	74	72	72	-0.040	5.92	0.17
80	13.210	13.212	0.17	0.17	1.35	81	2.01	1.16	82	1.2	95	0.050	100	100	1.6	0	603	281	686	415	398	477	937	334	75	73	74	72	72	-0.039	5.97	0.18
81	13.376	13.379	0.17	0.17	1.35	81	2.01	1.16	82	1.2	95	0.050	100	100	1.6	0	599	280	678	415	398	474	926	334	75	73	74	72	72	-0.039	5.95	0.19
82	13.542	13.546	0.17	0.17	1.35	81	2	1.16	82	1.2	95	0.050	100	100	1.6	0	595	280	670	414	399	472	915	332	75	73	74	72	72	-0.040	5.84	0.19
83	13.708	13.712	0.17	0.17	1.35	81	2.01	1.16	82	1.2	95	0.050	100	100	1.6	0	591	280	662	414	399	469	906	330	75	73	74	71	72	-0.039	5.82	0.2
84	13.874	13.879	0.17	0.17	1.35	81	2	1.16	82	1.2	95	0.050	100	100	1.6	0	588	280	655	414	400	467	898	329	75	73	74	71	72	-0.038	5.84	0.21
85	14.041	14.046	0.17	0.17	1.35	81	2.01	1.16	82	1.2	95	0.050	101	100	1.6	0	586	279	647	414	400	465	890	326	75	72	74	71	72	-0.037	5.75	0.22
86	14.207	14.213	0.17	0.17	1.35	81	2	1.16	82	1.2	96	0.050	100	100	1.5	-0.1	584	279	641	413	401	464	883	325	75	72	75	71	72	-0.037	5.75	0.22
87	14.373	14.380	0.17	0.17	1.35	81	2	1.16	82	1.2	95	0.050	100	100	1.5	0	580	279	634	413	401	461	876	324	75	72	75	71	72	-0.038	5.81	0.23
88	14.539	14.547	0.17	0.17	1.36	82	2	1.15	82	1.2	95	0.050	100	100	1.5	0	576	279	627	412	401	459	869	322	75	72	75	71	72	-0.037	5.68	0.22
89	14.705	14.714	0.17	0.17	1.35	82	2.01	1.16	82	1.2	95	0.050	100	100	1.5	0	574	278	620	411	402	457	864	321	75	72	74	71	72	-0.037	5.62	0.23
90	14.871	14.880	0.17	0.17	1.35	82	2	1.16	82	1.2	95	0.050	100	100	1.5	0	573	278	614	411	402	456	859	319	75	72	74	71	72	-0.036	5.59	0.24
91	15.038	15.047	0.17	0.17	1.35	82	2	1.16	82	1.2	94	0.050	100	100	1.5	0	569	278	609	410	402	454	854	318	75	72	75	71	72	-0.036	5.53	0.27
92	15.204	15.215	0.17	0.17	1.35	82	2.01	1.16	82	1.2	94	0.050	100	101	1.5	0	566	277	603	409	402	451	848	318	75	72	74	71	72	-0.036	5.49	0.27
93	15.370	15.382	0.17	0.17	1.35	82	2.01	1.15	82	1.2	94	0.050	100	100	1.4	-0.1	564	277	598	408	402	450	845	317	75	72	74	71	72	-0.036	5.55	0.29
94	15.536	15.548	0.17	0.17	1.35	82	2.01	1.16	82	1.2	94	0.050	100	100	1.4	0	560	277	593	408	402	448	842	316	75	72	74	71	72	-0.036	5.53	0.3
95	15.702	15.715	0.17	0.17	1.35	82	2	1.16	82	1.2	94	0.050	100	100	1.4	0	561	276	588	407	402	447	837	313	75	72	74	71	72	-0.036	5.43	0.3
96	15.869	15.882	0.17	0.17	1.35	82	2.01	1.16	82	1.2	94	0.050	100	100	1.4	0	556	276	583	406	402	445	830	313	75	72	74	71	72	-0.035	5.4	0.31
97	16.035	16.049	0.17	0.17	1.35	82	2.01	1.16	83	1.2	94	0.050	100	100	1.4	0	553	276	578	405	402	443	825	314	75	72	74	71	72	-0.035	5.42	0.32
98	16.201	16.216	0.17	0.17	1.35	82	2.01	1.16	83	1.2	94	0.050	100	100	1.4	0	551	275	573	404	402	441	821	311	75	72	75	71	72	-0.036	5.39	0.32
99	16.368	16.384	0.17	0.17	1.35	82	2	1.16	83	1.2	94	0.050	100	101	1.4	0	549	275	569	403	402	440	818	312	75	72	75	71	72	-0.035	5.46	0.32
100	16.534	16.551	0.17	0.17	1.35	82	2.01	1.16	83	1.2	94	0.050	100	100	1.3	-0.1	546	275	565	402	402	438	815	310	75	72	74	71	72	-0.034	5.44	0.33
101	16.700	16.718	0.17	0.17	1.35	82	2.01	1.16	83	1.2	93	0.050	100	100	1.3	0	545	274	560	401	402	436	811	309	75	72	75	71	72	-0.035	5.31	0.35
102	16.866	16.885	0.17	0.17	1.35	82	2.01	1.16	83	1.2	93	0.050	100	100	1.3	0	543	274	556	400	401	435	808	309	75	72	75	71	72	-0.035	5.28	0.36
103	17.033	17.052	0.17	0.17	1.35	82	2.01	1.16	83	1.2	93	0.050	100	100	1.3	0	540	274	552	399	401	433	805	306	75	72	74	71	72	-0.034	5.22	0.36
104	17.199	17.219	0.17	0.17	1.35	82	2.01	1.16	83	1.2	93	0.050	100	100	1.3	0	538	274	549	398	401	432	801	305	75	72	75	71	72	-0.035	5.2	0.37
105	17.366	17.386	0.17	0.17	1.35	82	2.01	1.16	83	1.2	93	0.050	100	100	1.3	0	536	273	545	397	401	430	799	304	75	72	75	71	72	-0.033	5.23	0.38
106	17.532	17.554	0.17	0.17	1.35	82	2.01	1.16	83	1.2	93	0.050	100	101	1.3	0	533	273	542	396	400	429	797	304	75	72	74	71	72	-0.033	5.2	0.39
107	17.698	17.721	0.17	0.17	1.35	82	2.01	1.15	83	1.2	93	0.050	100	100	1.2	-0.1	531	272	538	395	400	427	793	303	75	72	75	71	72	-0.034	5.17	0.38
108	17.865	17.888	0.17	0.17	1.35	82	2	1.16	83	1.2	93	0.050	100	100	1.2	0	529	272	535	394	400	426	790	303	75	72	75	71	73	-0.034	5.17	0.39
109	18.031	18.055	0.17	0.17	1.35	82	2	1.16	83	1.2	93	0.050	100	100	1.2	0	527	272	532	392	400	425	787	301	75	72	74	71	72	-0.034	5.12	0.39
110	18.198	18.223	0.17	0.17	1.35	83	2	1.16	83	1.2	93	0.050	100	101	1.2	0	525	271	529	391	399	423	785	302	75	72	74	71	72	-0.034	5.11	0.41

Wood Heater Test Data - ASTM E2780 / ASTM E2515

Run: 4

Manufacturer: Hearth & Home
Model: Intrepiod IV Catalytic
Tracking No.: 2264
Project No.: 0135WS038E
Test Date: 08-Jan-18
Beginning Clock Time: 11:52

Total Sampling Time: 173 min
Recording Interval: 1 min
Background Sample Volume: _____ cubic feet

Meter Box Y Factor: 0.981 (1) 0.984 (2) _____ (Amb)

Barometric Pressure:	Begin	Middle	End	Average
	29.89	29.82	29.78	29.83 "Hg

OMNI Equipment Numbers: _____

PM Control Modules: 0035, 0036
Dilution Tunnel MW(dry): 29.00 lb/lb-mole
Dilution Tunnel MW(wet): 28.78 lb/lb-mole
Dilution Tunnel H2O: 2.00 percent
Dilution Tunnel Static: -0.180 "H2O
Tunnel Area: 0.19635 ft2
Pitot Tube Cp: 0.99

Avg. Tunnel Velocity: 14.04 ft/sec.
Initial Tunnel Flow: 152.8 scfm
Average Tunnel Flow: 154.1 scfm
Post-Test Leak Check (1): 0.000 cfm @ 7 in. Hg
Post-Test Leak Check (2): 0.000 cfm @ 7 in. Hg
Average Test Piece Fuel Moisture: 21.07 Dry Basis %

Technician Signature: _____

Velocity Traverse Data	Pt.1	Pt.2	Pt.3	Pt.4	Pt.5	Pt.6	Pt.7	Pt.8	Center	
Initial dP	0.032	0.050	0.052	0.034	0.030	0.050	0.050	0.040	0.050	"H2O
Temp:	92	92	91	91	91	91	91	91	91	°F

V_{strav} 14.00 ft/sec V_{scent} 15.15 ft/sec F_p 0.924

	Particulate Sampling Data														Fuel Weight (lb)		Temperature Data (°F)												Stack Gas Data		
Elapsed Time (min)	Gas Meter 1 (ft^3)	Gas Meter 2 (ft^3)	Sample Rate 1 (cfm)	Sample Rate 2 (cfm)	Orifice dH 1 ("H_2O)	Meter 1 Temp (°F)	Meter 1 Vacuum ("Hg)	Orifice dH 2 ("H_2O)	Meter 2 Temp (°F)	Meter 2 Vacuum ("Hg)	Dilution Tunnel (°F)	Dilution Tunnel Center dP	Pro. Rate 1	Pro. Rate 2	Scale Reading	Weight Change	Firebox Top	Firebox Bottom	Firebox Back	Firebox Left	Firebox Right	Avg. Stove Surface	Catalyst Exit	Stack	Filter 1	Dryer Exit 1	Filter 2	Dryer Exit 2	Ambient	Draft ("H_2O)	CO_2 (%)	CO (%)
111	18.364	18.390	0.17	0.17	1.34	83	2.01	1.16	83	1.2	93	0.050	99	100	1.2	0	523	271	526	390	399	422	784	302	75	72	75	71	72	-0.033	5.11	0.42
112	18.530	18.557	0.17	0.17	1.34	83	2.01	1.16	83	1.2	93	0.050	99	100	1.2	0	522	271	524	389	399	421	782	300	75	71	75	71	72	-0.034	5.03	0.42
113	18.697	18.724	0.17	0.17	1.35	83	2.01	1.16	83	1.2	93	0.050	100	100	1.2	0	520	270	521	388	399	420	780	300	75	71	74	71	72	-0.033	5	0.43
114	18.863	18.891	0.17	0.17	1.34	83	2.01	1.16	83	1.2	93	0.050	99	100	1.1	-0.1	516	270	518	387	399	418	778	298	75	71	75	71	72	-0.033	5.05	0.43
115	19.030	19.058	0.17	0.17	1.34	83	2.01	1.16	83	1.2	93	0.050	100	100	1.1	0	513	269	515	386	399	416	767	296	75	71	75	71	73	-0.032	6.14	0.35
116	19.196	19.225	0.17	0.17	1.34	83	2.01	1.16	83	1.2	93	0.050	99	100	1.1	0	512	269	512	385	399	415	767	293	75	71	75	71	72	-0.032	6.01	0.35
117	19.362	19.392	0.17	0.17	1.35	83	2.01	1.16	83	1.2	92	0.050	99	100	1.1	0	513	269	510	383	399	415	767	294	75	71	75	71	72	-0.032	6.01	0.36
118	19.529	19.559	0.17	0.17	1.35	83	2.01	1.16	83	1.2	93	0.050	100	100	1.1	0	513	268	507	383	399	414	765	293	75	71	75	71	73	-0.032	5.94	0.35
119	19.695	19.726	0.17	0.17	1.35	83	2	1.15	83	1.2	93	0.050	99	100	1.0	-0.1	513	268	505	382	399	413	766	290	75	71	75	71	73	-0.031	5.95	0.36
120	19.862	19.893	0.17	0.17	1.35	83	2.01	1.16	83	1.2	93	0.050	100	100	1.0	0	513	267	503	381	398	412	766	291	75	71	75	71	73	-0.031	6.05	0.36
121	20.028	20.061	0.17	0.17	1.35	83	2.01	1.16	83	1.2	92	0.050	99	100	1.0	0	513	267	501	380	399	412	765	290	75	71	75	71	73	-0.031	5.95	0.36
122	20.195	20.228	0.17	0.17	1.35	83	2	1.16	83	1.2	92	0.050	100	100	1.0	0	512	267	499	379	398	411	767	289	75	71	75	71	73	-0.031	6.13	0.35
123	20.361	20.395	0.17	0.17	1.34	83	2.01	1.16	83	1.2	93	0.050	99	100	1.0	0	510	266	498	379	398	410	766	289	75	71	75	71	73	-0.030	6.21	0.34
124	20.527	20.562	0.17	0.17	1.35	83	2.01	1.16	83	1.2	93	0.050	99	100	0.9	-0.1	510	266	496	378	398	410	766	287	75	71	75	70	73	-0.030	6.1	0.36
125	20.694	20.729	0.17	0.17	1.35	83	2.01	1.16	83	1.2	93	0.050	100	100	0.9	0	509	265	494	378	398	409	766	288	75	71	75	70	73	-0.031	6.08	0.37
126	20.860	20.896	0.17	0.17	1.35	83	2.02	1.16	83	1.2	92	0.050	99	100	0.9	0	510	265	493	377	398	409	767	289	75	71	75	70	73	-0.031	6.06	0.38
127	21.027	21.063	0.17	0.17	1.35	83	2.01	1.16	83	1.2	92	0.050	100	100	0.9	0	508	264	491	377	398	408	768	288	75	71	75	71	73	-0.030	6.02	0.4
128	21.193	21.231	0.17	0.17	1.35	83	2.01	1.16	83	1.2	92	0.050	99	100	0.9	0	508	264	490	376	398	407	769	287	75	71	75	70	73	-0.030	6.05	0.41
129	21.359	21.397	0.17	0.17	1.35	83	2.01	1.16	83	1.2	92	0.050	99	99	0.9	0	508	264	489	375	398	407	767	287	75	71	75	71	73	-0.031	5.91	0.4
130	21.526	21.565	0.17	0.17	1.35	83	2.01	1.16	83	1.2	92	0.050	100	100	0.8	-0.1	508	263	488	375	398	406	766	288	75	71	75	71	73	-0.030	5.86	0.42
131	21.692	21.732	0.17	0.17	1.35	83	2.01	1.16	84	1.2	92	0.050	99	100	0.8	0	508	263	487	375	398	406	766	287	75	71	75	70	73	-0.030	5.89	0.43
132	21.859	21.899	0.17	0.17	1.35	83	2.01	1.16	84	1.2	92	0.050	100	100	0.8	0	507	263	485	374	398	405	766	286	75	71	75	71	73	-0.030	6.12	0.38
133	22.026	22.067	0.17	0.17	1.35	83	2.01	1.16	84	1.2	92	0.050	100	100	0.8	0	506	262	484	374	397	405	766	285	75	71	75	70	73	-0.030	6.06	0.38
134	22.192	22.234	0.17	0.17	1.36	83	2.01	1.16	84	1.2	92	0.050	99	100	0.8	0	504	262	483	373	397	404	764	284	75	71	75	70	73	-0.030	6.01	0.39
135	22.359	22.401	0.17	0.17	1.35	83	2.02	1.16	84	1.2	92	0.050	100	100	0.7	-0.1	503	262	482	373	397	403	764	284	75	71	75	71	73	-0.030	6.03	0.39
136	22.525	22.568	0.17	0.17	1.35	83	2.01	1.16	84	1.2	92	0.050	99	100	0.7	0	502	262	481	373	397	403	763	283	75	71	75	70	73	-0.030	5.88	0.41
137	22.691	22.735	0.17	0.17	1.35	83	2	1.16	84	1.2	91	0.050	99	100	0.7	0	502	261	480	372	397	402	764	283	75	71	75	70	73	-0.030	5.81	0.42
138	22.858	22.902	0.17	0.17	1.35	83	2.01	1.16	84	1.2	91	0.050	100	100	0.7	0	501	261	479	372	397	402	764	284	75	71	75	71	73	-0.030	5.81	0.44
139	23.024	23.070	0.17	0.17	1.35	83	2.01	1.16	84	1.2	91	0.050	99	100	0.7	0	499	261	479	371	397	401	763	284	75	71	75	70	73	-0.030	5.81	0.43
140	23.191	23.237	0.17	0.17	1.34	83	2.01	1.16	84	1.2	91	0.050	100	100	0.7	0	499	261	478	371	396	401	763	284	75	71	75	70	73	-0.030	5.73	0.44
141	23.357	23.404	0.17	0.17	1.35	83	2.01	1.15	84	1.2	91	0.050	99	100	0.6	-0.1	497	261	477	370	396	400	761	282	75	71	75	70	73	-0.030	5.73	0.43
142	23.524	23.572	0.17	0.17	1.35	84	2.01	1.15	84	1.2	90	0.050	100	100	0.6	0	496	260	476	370	395	399	760	282	75	71	75	71	73	-0.031	5.64	0.45
143	23.690	23.739	0.17	0.17	1.36	84	2.01	1.16	84	1.2	90	0.050	99	99	0.6	0	496	260	475	370	395	399	760	282	75	71	75	71	73	-0.031	5.56	0.44
144	23.857	23.906	0.17	0.17	1.35	84	2.01	1.16	84	1.2	90	0.050	100	99	0.6	0	495	260	474	369	395	399	759	282	75	71	75	71	73	-0.030	5.59	0.45
145	24.023	24.074	0.17	0.17	1.36	84	2.01	1.16	84	1.2	90	0.050	99	100	0.6	0	495	260	474	369	394	398	758	282	75	71	75	71	73	-0.031	5.55	0.46
146	24.190	24.241	0.17	0.17	1.36	84	2.02	1.16	84	1.2	90	0.050	100	99	0.6	0	497	260	473	368	394	398	757	283	75	71	75	71	73	-0.030	5.54	0.47
147	24.356	24.408	0.17	0.17	1.35	84	2.01	1.16	84	1.2	90	0.050	99	99	0.5	-0.1	494	260	472	368	394	398	755	282	75	71	75	70	73	-0.030	5.49	0.48

Wood Heater Test Data - ASTM E2780 / ASTM E2515

Run: 4

Manufacturer: Hearth & Home
Model: Intrepiod IV Catalytic
Tracking No.: 2264
Project No.: 0135WS038E
Test Date: 08-Jan-18
Beginning Clock Time: 11:52

Total Sampling Time: 173 min
Recording Interval: 1 min
Background Sample Volume: _____ cubic feet

Meter Box Y Factor: 0.981 (1) 0.984 (2) _____ (Amb)

Barometric Pressure:	Begin	Middle	End	Average
	29.89	29.82	29.78	29.83 "Hg

OMNI Equipment Numbers: _____

PM Control Modules: 0035, 0036
Dilution Tunnel MW(dry): 29.00 lb/lb-mole
Dilution Tunnel MW(wet): 28.78 lb/lb-mole
Dilution Tunnel H2O: 2.00 percent
Dilution Tunnel Static: -0.180 "H2O
Tunnel Area: 0.19635 ft2
Pitot Tube Cp: 0.99

Avg. Tunnel Velocity: 14.04 ft/sec.
Initial Tunnel Flow: 152.8 scfm
Average Tunnel Flow: 154.1 scfm
Post-Test Leak Check (1): 0.000 cfm @ 7 in. Hg
Post-Test Leak Check (2): 0.000 cfm @ 7 in. Hg
Average Test Piece Fuel Moisture: 21.07 Dry Basis %

Technician Signature: _____

Velocity Traverse Data	Pt.1	Pt.2	Pt.3	Pt.4	Pt.5	Pt.6	Pt.7	Pt.8	Center	
Initial dP	0.032	0.050	0.052	0.034	0.030	0.050	0.050	0.040	0.050	"H2O
Temp:	92	92	91	91	91	91	91	91	91	°F

V_{strav} 14.00 ft/sec V_{scent} 15.15 ft/sec F_p 0.924

	Particulate Sampling Data														Fuel Weight (lb)		Temperature Data (°F)													Stack Gas Data		
Elapsed Time (min)	Gas Meter 1 (ft^3)	Gas Meter 2 (ft^3)	Sample Rate 1 (cfm)	Sample Rate 2 (cfm)	Orifice dH 1 ("H_2O)	Meter 1 Temp (°F)	Meter 1 Vacuum ("Hg)	Orifice dH 2 ("H_2O)	Meter 2 Temp (°F)	Meter 2 Vacuum ("Hg)	Dilution Tunnel (°F)	Dilution Tunnel Center dP	Pro. Rate 1	Pro. Rate 2	Scale Reading	Weight Change	Firebox Top	Firebox Bottom	Firebox Back	Firebox Left	Firebox Right	Avg. Stove Surface	Catalyst Exit	Stack	Filter 1	Dryer Exit 1	Filter 2	Dryer Exit 2	Ambient	Draft ("H_2O)	CO_2 (%)	CO (%)
148	24.523	24.575	0.17	0.17	1.35	84	2.01	1.16	84	1.2	89	0.050	100	99	0.5	0	493	260	470	368	393	397	754	283	75	71	75	70	72	-0.031	5.48	0.49
149	24.690	24.743	0.17	0.17	1.36	84	2.01	1.16	84	1.2	89	0.050	100	100	0.5	0	493	259	470	367	393	396	752	283	75	71	75	70	72	-0.031	5.45	0.49
150	24.857	24.910	0.17	0.17	1.36	84	2.02	1.16	84	1.2	89	0.050	100	99	0.5	0	492	259	468	367	392	396	751	282	75	71	75	70	72	-0.030	5.6	0.48
151	25.023	25.077	0.17	0.17	1.36	84	2	1.16	84	1.2	89	0.050	99	99	0.5	0	492	259	467	366	391	395	749	279	74	71	75	70	72	-0.030	5.86	0.45
152	25.190	25.245	0.17	0.17	1.36	84	2.01	1.16	84	1.2	89	0.050	100	100	0.5	0	491	259	467	366	391	395	747	281	74	71	75	70	72	-0.030	5.83	0.45
153	25.357	25.412	0.17	0.17	1.36	84	2.01	1.15	84	1.2	89	0.050	100	99	0.4	-0.1	491	259	466	365	391	394	745	280	74	71	74	70	72	-0.030	5.77	0.44
154	25.524	25.579	0.17	0.17	1.36	84	2.01	1.16	84	1.2	89	0.050	100	99	0.4	0	491	259	465	365	390	394	745	279	74	71	74	70	72	-0.030	5.79	0.45
155	25.690	25.747	0.17	0.17	1.36	84	2.01	1.16	84	1.2	89	0.050	99	100	0.4	0	491	259	464	364	390	394	744	280	74	71	74	70	72	-0.030	5.6	0.45
156	25.857	25.914	0.17	0.17	1.36	84	2.01	1.16	84	1.2	88	0.050	99	99	0.4	0	491	259	464	364	389	393	745	280	74	71	74	70	72	-0.030	5.72	0.46
157	26.025	26.081	0.17	0.17	1.36	84	2.01	1.16	84	1.2	89	0.050	100	99	0.4	0	491	259	463	363	389	393	744	279	74	71	74	70	72	-0.031	5.69	0.46
158	26.191	26.249	0.17	0.17	1.36	84	2.02	1.16	84	1.2	89	0.050	99	100	0.3	-0.1	490	259	462	363	388	392	743	279	74	71	74	70	72	-0.029	5.58	0.46
159	26.358	26.416	0.17	0.17	1.35	84	2.01	1.16	84	1.2	89	0.050	100	99	0.3	0	490	259	462	362	388	392	743	277	74	71	74	70	72	-0.030	5.42	0.46
160	26.525	26.584	0.17	0.17	1.36	84	2.01	1.16	84	1.2	88	0.050	99	100	0.3	0	489	259	461	361	388	392	742	278	74	71	74	70	71	-0.030	5.44	0.48
161	26.692	26.751	0.17	0.17	1.36	84	2	1.16	84	1.2	88	0.050	99	99	0.3	0	488	259	461	361	387	391	742	279	74	71	74	70	72	-0.030	5.51	0.48
162	26.859	26.918	0.17	0.17	1.35	84	2.01	1.16	84	1.2	88	0.050	99	99	0.3	0	487	259	460	360	387	391	741	277	74	71	74	70	72	-0.031	5.38	0.47
163	27.026	27.086	0.17	0.17	1.36	84	2.02	1.16	84	1.2	88	0.050	99	100	0.3	0	486	259	459	360	387	390	740	279	74	71	74	70	71	-0.030	5.48	0.48
164	27.193	27.254	0.17	0.17	1.36	84	2.01	1.16	84	1.2	88	0.050	99	100	0.2	-0.1	486	259	458	359	386	390	740	279	74	71	74	70	71	-0.030	5.42	0.49
165	27.360	27.421	0.17	0.17	1.35	84	2.01	1.16	84	1.2	88	0.050	99	99	0.2	0	486	259	458	358	386	389	740	280	74	71	74	70	72	-0.030	5.39	0.5
166	27.527	27.589	0.17	0.17	1.35	84	2.01	1.16	84	1.2	88	0.050	99	100	0.2	0	485	259	457	357	386	389	738	279	74	71	74	70	72	-0.030	5.29	0.5
167	27.694	27.756	0.17	0.17	1.36	84	2.01	1.16	84	1.2	88	0.050	99	99	0.2	0	484	259	457	357	385	388	734	277	74	71	74	70	71	-0.031	5.25	0.48
168	27.861	27.924	0.17	0.17	1.36	84	2	1.16	84	1.2	87	0.050	99	100	0.2	0	484	258	456	356	386	388	732	277	74	71	73	70	71	-0.031	5.22	0.48
169	28.028	28.091	0.17	0.17	1.35	83	2.02	1.16	84	1.2	87	0.050	100	99	0.2	0	482	258	455	355	385	387	730	277	74	71	73	70	71	-0.031	5.07	0.48
170	28.195	28.259	0.17	0.17	1.36	83	2.01	1.16	84	1.2	87	0.050	100	100	0.1	-0.1	481	258	454	355	385	387	729	278	73	71	73	70	71	-0.031	5.11	0.49
171	28.362	28.426	0.17	0.17	1.35	83	2.01	1.16	84	1.2	87	0.050	100	99	0.1	0	480	258	454	354	385	386	728	278	73	71	73	70	71	-0.030	5.11	0.51
172	28.529	28.594	0.17	0.17	1.36	83	2.01	1.16	84	1.2	87	0.050	100	100	0.1	0	478	258	453	353	384	385	727	277	73	70	73	70	71	-0.030	5.06	0.52
173	28.696	28.761	0.17	0.17	1.35	83	2	1.16	84	1.2	87	0.050	100	99	0.0	-0.1	477	258	453	353	384	385	728	276	73	71	73	70	71	-0.030	5.04	0.52
Avg/Tot	28.696	28.761	0.17	0.17	1.35	80		1.15	80		93	0.050	100	100								73.4				72	73	71	71	-0.039		

Wood Heater Lab Data - ASTM E2780 / ASTM E2515

Manufacturer: Hearth & Home
Model: Intrepiod IV Catalytic
Tracking No.: 2264
Project No.: 0135WS038E
Run #: 4
Date: 1/8/18

Equipment Numbers:

TRAIN 1 (First Hour emissions)

Sample Component	Reagent	Filter, Probe or Dish #	Weights		
			Final, mg	Tare, mg	Particulate, mg
B. Front filter catch	Filter	D346	111.6	111.4	0.2
C. Rear filter catch	Filter				0.0
D. Probe catch*	Probe				0.0
E. Filter seals catch*	Seals				0.0

Sub-Total Total Particulate, mg: 0.2

TRAIN 1 (Post First Hour Change-out)

Sample Component	Reagent	Filter, Probe or Dish #	Weights		
			Final, mg	Tare, mg	Particulate, mg
B. Front filter catch	Filter	D347	111.3	111.4	-0.1
C. Rear filter catch	Filter	D348	110.8	111.0	-0.2
D. Probe catch*	Probe	21	114392.7	114392.8	0.0
E. Filter seals catch*	Seals	R557	4087.8	4086.8	1.0

Sub-Total Total Particulate, mg: 0.7

Train 1 Aggregate Total Particulate, mg: **0.9**

TRAIN 2

Sample Component	Reagent	Filter, Probe or Dish #	Weights		
			Final, mg	Tare, mg	Particulate, mg
A. Front filter catch	Filter	D349	111.8	111.4	0.4
B. Rear filter catch	Filter	D372	111.6	111.9	-0.3
C. Probe catch*	Probe	22	114344.6	114344.7	0.0
D. Filter seals catch*	Seals	R558	3307.8	3306.6	1.2

Total Particulate, mg: **1.3**

AMBIENT

Sample Component	Reagent	Filter # or Probe #	Weights		
			Final, mg	Tare, mg	Particulate, mg
A. Front filter catch*	Filter		0.0	0.0	0.0

Total Particulate, mg: **0.0**

*Particulate catch that results in a negative number, is assumed to be zero for probes and seals, negative numbers for filters are assumed to be part of the seal weight.

Component	Equations:
A. Front filter catch	Final (mg) - Tare (mg) = Particulate, mg
B. Rear filter catch	Final (mg) - Tare (mg) = Particulate, mg
C. Probe catch	Final (mg) - Tare (mg) = Particulate, mg

Technician Signature:

Wood Heater Test Results - ASTM E2780 / ASTM E2515

Manufacturer: Hearth & Home
Model: Intrepiod IV Catalytic
Project No.: 0135WS038E
Tracking No.: 2264
Run: 4
Test Date: 01/08/18

Burn Rate	**1.15 kg/hr dry**
Average Tunnel Temperature	93 degrees Fahrenheit
Average Gas Velocity in Dilution Tunnel - vs	14.04 feet/second
Average Gas Flow Rate in Dilution Tunnel - Qsd	9248.3 dscf/hour
Average Delta p	0.050 inches H20
Total Time of Test	173 minutes

	AMBIENT	SAMPLE TRAIN 1	SAMPLE TRAIN 2	FIRST HOUR FILTER (TRAIN 1)
Total Sample Volume - Vm	0.000 cubic feet	28.696 cubic feet	28.761 cubic feet	9.893 cubic feet
Average Gas Meter Temperature	71 degrees Fahrenheit	80 degrees Fahrenheit	80 degrees Fahrenheit	76 degrees Fahrenheit
Total Sample Volume (Standard Conditions) - Vmstd	0.000 dscf	27.522 dscf	27.634 dscf	9.568 dscf
Total Particulates - m_n	0 mg	0.9 mg	1.3 mg	0.2 mg
Particulate Concentration (dry-standard) - C_r/C_s	0.000000 grams/dscf	0.00003 grams/dscf	0.00005 grams/dscf	0.00002 grams/dscf
Total Particulate Emissions - E_T	0.00 grams	0.87 grams	1.25 grams	0.19 grams
Particulate Emission Rate	0.00 grams/hour	0.30 grams/hour	0.44 grams/hour	0.19 grams/hour
Emissions Factor		0.26 g/kg	0.38 g/kg	0.08 g/kg
Difference from Average Total Particulate Emissions		0.19 grams	0.19 grams	
	Dual Train Comparison Results Are Acceptable			

FINAL AVERAGE RESULTS

Complete Test Run	
Total Particulate Emissions - E_T	1.06 grams
Particulate Emission Rate	**0.37 grams/hour**
Emissions Factor	0.32 grams/kg
First Hour Emissions	
Total Particulate Emissions - E_T	0.19 grams
Particulate Emission Rate	0.19 grams/hour
Emissions Factor	0.08 grams/kg
7.5% of Average Total Particulate Emissions	0.08 grams

QUALITY CHECKS

Filter Temps < 90 °F	OK
Filter Face Velocity (47 mm)	OK
Dryer Exit Temp < 80F	OK
Leakage Rate	OK
Ambient Temp (55-90°F)	OK
Negative Probe Weight Eval.	NOT ACCEPTABLE
Pro-Rate Variation	OK
Stove Surface ΔT	OK
Train Precesion 7.5%	17.99
Train Precision 0.5g/kg	0.12

Technician Signature: 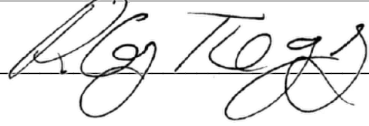

Wood Heater Lab Data - ASTM E2780 / ASTM E2515

Manufacturer:	Hearth & Home	Equipment Numbers:	
Model:	Intrepiod IV Catalytic		
Tracking No.:	2264		
Project No.:	0135WS038E		
Run #:	4		
Date:	1/8/18		

Uncorrected

TRAIN 1 (First Hour emissions)

Sample Component	Reagent	Filter, Probe or Dish #	Weights		
			Final, mg	Tare, mg	Particulate, mg
B. Front filter catch	Filter	D346	111.6	111.4	0.2
C. Rear filter catch	Filter				0.0
D. Probe catch*	Probe				0.0
E. Filter seals catch*	Seals				0.0

Sub-Total	Total Particulate, mg:	0.2

TRAIN 1 (Post First Hour Change-out)

Sample Component	Reagent	Filter, Probe or Dish #	Weights		
			Final, mg	Tare, mg	Particulate, mg
B. Front filter catch	Filter	D347	111.4	111.4	0.0
C. Rear filter catch	Filter	D348	111.0	111.0	0.0
D. Probe catch*	Probe	21	114392.7	114392.8	0.0
E. Filter seals catch*	Seals	R557	4087.8	4086.8	1.0

Sub-Total	Total Particulate, mg:	1.0
Train 1 Aggregate	Total Particulate, mg:	**1.2**

TRAIN 2

Sample Component	Reagent	Filter, Probe or Dish #	Weights		
			Final, mg	Tare, mg	Particulate, mg
A. Front filter catch	Filter	D349	111.8	111.4	0.4
B. Rear filter catch	Filter	D372	111.9	111.9	0.0
C. Probe catch*	Probe	22	114344.6	114344.7	0.0
D. Filter seals catch*	Seals	R558	3307.8	3306.6	1.2

	Total Particulate, mg:	**1.6**

AMBIENT

Sample Component	Reagent	Filter # or Probe #	Weights		
			Final, mg	Tare, mg	Particulate, mg
A. Front filter catch*	Filter		0.0	0.0	0.0

	Total Particulate, mg:	**0.0**

*Particulate catch that results in a negative number, is assumed to be zero for probes and seals, negative numbers for filters are assumed to be part of the seal weight.

Component	Equations:
A. Front filter catch	Final (mg) - Tare (mg) = Particulate, mg
B. Rear filter catch	Final (mg) - Tare (mg) = Particulate, mg
C. Probe catch	Final (mg) - Tare (mg) = Particulate, mg

Technician Signature: 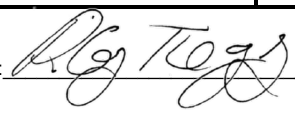

Wood Heater Test Results - ASTM E2780 / ASTM E2515

Manufacturer: Hearth & Home
Model: Intrepiod IV Catalytic
Project No.: 0135WS038E
Tracking No.: 2264
Run: 4
Test Date: 01/08/18

Burn Rate	**1.15 kg/hr dry**
Average Tunnel Temperature	93 degrees Fahrenheit
Average Gas Velocity in Dilution Tunnel - vs	14.04 feet/second
Average Gas Flow Rate in Dilution Tunnel - Qsd	9248.3 dscf/hour
Average Delta p	0.050 inches H20
Total Time of Test	173 minutes

Uncorrected

	AMBIENT	SAMPLE TRAIN 1	SAMPLE TRAIN 2	FIRST HOUR FILTER (TRAIN 1)
Total Sample Volume - Vm	0.000 cubic feet	28.696 cubic feet	28.761 cubic feet	9.893 cubic feet
Average Gas Meter Temperature	71 degrees Fahrenheit	80 degrees Fahrenheit	80 degrees Fahrenheit	76 degrees Fahrenheit
Total Sample Volume (Standard Conditions) - Vmstd	0.000 dscf	27.522 dscf	27.634 dscf	9.568 dscf
Total Particulates - m_n	0 mg	1.2 mg	1.6 mg	0.2 mg
Particulate Concentration (dry-standard) - C_f/C_s	0.000000 grams/dscf	0.00004 grams/dscf	0.00006 grams/dscf	0.00002 grams/dscf
Total Particulate Emissions - E_T	0.00 grams	1.16 grams	1.54 grams	0.19 grams
Particulate Emission Rate	0.00 grams/hour	0.40 grams/hour	0.54 grams/hour	0.19 grams/hour
Emissions Factor		0.35 g/kg	0.47 g/kg	0.08 g/kg
Difference from Average Total Particulate Emissions		0.19 grams	0.19 grams	
	Dual Train Comparison Results Are Acceptable			

FINAL AVERAGE RESULTS

Complete Test Run	
Total Particulate Emissions - E_T	1.35 grams
Particulate Emission Rate	**0.47 grams/hour**
Emissions Factor	0.41 grams/kg
First Hour Emissions	
Total Particulate Emissions - E_T	0.19 grams
Particulate Emission Rate	0.19 grams/hour
Emissions Factor	0.08 grams/kg
7.5% of Average Total Particulate Emissions	0.10 grams

QUALITY CHECKS

Filter Temps < 90 °F	OK
Filter Face Velocity (47 mm)	OK
Dryer Exit Temp < 80F	OK
Leakage Rate	OK
Ambient Temp (55-90°F)	OK
Negative Probe Weight Eval.	NOT ACCEPTABLE
Pro-Rate Variation	OK
Stove Surface ΔT	OK
Train Precesion 7.5%	14.09
Train Precision 0.5g/kg	0.12

Technician Signature: 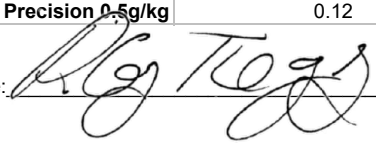

Wood Heater Efficiency Results - CSA B415.1

Manufacturer: Hearth & Home
Model: repiod IV Catalytic
Date: 01/08/18
Run: 4
Control #: 0135WS038E
Test Duration: 173
Output Category: II

Technician Signature: 

Test Results in Accordance with CSA B415.1-09

	HHV Basis	LHV Basis
Overall Efficiency	74.9%	80.9%
Combustion Efficiency	95.6%	95.6%
Heat Transfer Efficiency	78%	84.6%

Output Rate (kJ/h)	16,767	15,906	**(Btu/h)**
Burn Rate (kg/h)	1.13	2.49	**(lb/h)**
Input (kJ/h)	22,400	21,249	**(Btu/h)**

Test Load Weight (dry kg)	3.26	7.19	**dry lb**
MC wet (%)	17.40542922		
MC dry (%)	21.07		
Particulate (g)	0.37		
CO (g)	210		
Test Duration (h)	2.88		

Emissions	Particulate	CO
g/MJ Output	0.01	4.35
g/kg Dry Fuel	0.11	64.45
g/h	0.13	72.88
lb/MM Btu Output	0.02	10.10

Air/Fuel Ratio (A/F)	12.94

VERSION: **2.2** **12/14/2009**

OMNI-Test Laboratories, Inc. **ASTM E2780 Wood Heater Run Sheets**

Client: Hearth & Home Project Number: 0135WS038E Run Number: 4

Model: Intrepid IV Catalytic Tracking Number: 2264 Date: 1/8/18

Test Crew: B Davis

OMNI Equipment ID numbers:

ASTM E2515 Lab Sheet

Assembled By:

B Davis

Date/Time in Dessicator:

1/8/18 1520

	Weighing #1	Weighing #2	Weighing #3	Weighing #4	Weighing #5
Date/Time:	1/9/18 0940	1/10/18 0820	1/11/18 0905		
R/H %:	8.9	6.7	10.3		
Temp:	71.2	68.9	68.5		
200 mg Audit:	0.2000	0.2000	0.1999		
2 g Audit:	2.000	1.9999	1.9998		
100 g Audit:	99.9979	99.9980	99.9981		
Initials:	DC	BC	BC		

Train	Element	ID #	Tare (mg)	Weight (mg)	Weight (mg)	Weight (mg)	Weight (mg)	Weight (mg)
A (First Hour)	Front Filter	D346	111.4	111.7	111.6	✓		
	Rear Filter							
	Probe							
	O-Ring Set							
A (Remainder)	Front Filter	D347	111.4	111.3	111.3	✓		
	Rear Filter	D348	111.0	110.8	110.8	✓		
	Probe	21	114392.8	114393.2	114392.8	114392.7 ✓		
	O-Ring Set	R557	4086.8 ~~4087.0~~	4087.8	4087.8	✓		
B	Front Filter	D349	111.4	111.8	111.8	✓		
	Rear Filter	D372	111.9	111.6	111.6	✓		
	Probe	22	114344.7	114345.1	114344.7	114344.6 ✓		
	O-Ring Set	R558	3306.6	3307.9	3307.8	✓		
BG	Filter							

Technician Signature: B D

Date: 1/23/18

OMNI-Test Laboratories, Inc. **ASTM E2780 Wood Heater Run Sheets**

Client: Hearth & Home Project Number: 0135WS038E Run Number: 4

Model: Intrepid IV Catalytic Tracking Number: 2264 Date: 1/8/18

Test Crew: B Davis

OMNI Equipment ID numbers:

Wood Heater Supplemental Data

Start Time: 11:52 Booth #: E1

Stop Time: 1445

Stack Gas Leak Check:

Initial: good Final: good

Sample Train Leak Check:

A: 0.0 @ 7 "Hg

B: 0.0 @ 7 "Hg

Calibrations: Span Gas CO_2: 16.74 CO: 4.20/901

	Pre Test		Post Test	
	Zero	Span	Zero	Span
Time	1131	1131	1449	1449
CO_2	0.00	16.74	0.01	16.67
CO	0.000/0	4.201/900	0.000/0	4.186/893

Air Velocity (ft/min): Initial: 450 Final: 450

Scale Audit (lbs): Initial: 10.0 Final: 10.0

Pitot Tube Leak Test: Initial: 0.0 Final: 0.0

Stack Diameter (in): 6"

Induced Draft: 0.0

% Smoke Capture: 100%

Flue Pipe Cleaned Prior to First Test in Series:

Date: 1/3/18 Initials: BD

	Initial	Middle	Ending
P_b (in/Hg)	29.89	29.82	29.78
RH (%)	23.1	21.4	24.4
Ambient (°F)	68	71	71

Background Filter Volume: N/A

Tunnel Traverse		
Microtector Reading	dP (in H_2O)	T(°F)
1	.032	92
2	.050	92
3	.052	91
4	.034	91
1	.030	91
2	.050	91
3	.050	91
4	.040	91
Center:		
	.050	91

Tunnel Static Pressure (in H_2O):	
Beginning of Test	End of Test
-.18	-.18

Technician Signature: BD

Date: 1/23/18

OMNI-Test Laboratories, Inc. **ASTM E2780 Wood Heater Run Sheets**

Client: Hearth & Home Project Number: 0135WS038E Run Number: 4

Model: Intrepid IV Catalytic Tracking Number: 2264 Date: 1/8/18

Test Crew: B Davis

OMNI Equipment ID numbers:

Wood Heater Fuel Data

Fuel: Douglas fir, untreated and air dried, standard grade or better dimensional lumber

Pre-Burn Fuel

Calibration: Cal Value (1) = 12% Actual Reading 12
Cal Value (2) = 22% Actual Reading 22

Piece:	Length:	Reading:	Piece:	Length:	Reading:
1	28 in	22.5	7	____ in	____
2	28 in	22.2	8	____ in	____
	28 #in	20.0	____	____	____
3	28 in	23.2	9	____ in	____
4	28 in	20.3	10	____ in	____
5	____ in	____	11	____ in	____
6	____ in	____	12	____ in	____

Total Pre-Burn Fuel Weight: 13.8 Pre-Burn Fuel Average Moisture: 21.6%

Time (clock): 0845 Room Temperature (F): 69 Initials: BK

Test Fuel

Firebox Volume (ft³): 1.31 Test Fuel Piece Length (in): 13.5

Load Weight Range (lb): 8.25 - 9.17 - 10.08 Total Wet Fuel Load Weight (lb): 8.7 (1.8 - 2.2)

Fuel Type & Amount: 2 x 4: 5 4 x 4: 0

Weight (with spacers): 8.7 Weight (with spacers): 0

Piece:	Weight (lbs):	Moisture Readings (%DB):			Fuel Type:
1	1.4	21.5	22.2	21.9	2x4
2	1.4	21.0	21.4	22.1	2x4
3	1.4	21.1	21.9	21.1	2x4
4	1.4	21.6	21.5	20.5	2x4
5	1.3	19.3	20.1	18.9	2x4
6					
7					

Spacer Moisture Readings (%DB)

15.2	11.4	13.6	9.4	12.0	____	____	____
13.9	12.0	12.9	12.0	9.2	____	____	____
11.2	12.7	12.7	12.0	____	____	____	____
9.5	9.7	12.3	12.7	____	____	____	____

Technician Signature: 11:25 Room Temperature (F): 70 Date: 1/23/18 Initials: BK

Time (clock):

OMNI-Test Laboratories, Inc. **ASTM E2780 Wood Heater Run Sheets**

Client: Hearth & Home Project Number: 0135WS038E Run Number: 4

Model: Intrepid IV Catalytic Tracking Number: 2264 Date: 1/8/18

Test Crew: BDavis

OMNI Equipment ID numbers:

Wood Heater Run Notes

Air Control Settings

Primary:

Fully open, Push fully in the Left

Secondary: fixed

Tertiary/Pilot: N/A

Fan: N/A

Preburn Notes

Time	Notes
10	Raked coals
30	Raked coals
50	Raked coals
70	Raked coals
90	Leveled coal bed

Test Notes

Sketch test fuel configuration:

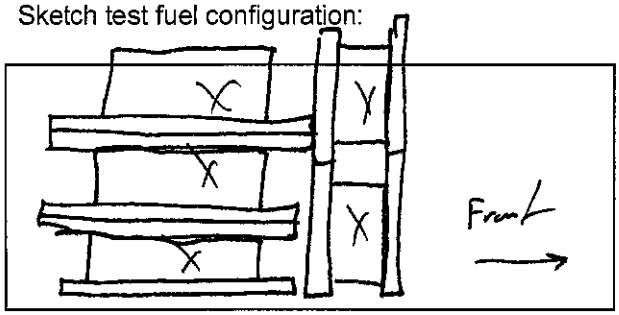

Start up procedures & Timeline:

Bypass: closed by 55 seconds
Fuel loaded by: 50 seconds
Door closed at: 55 seconds
Primary air: At test setting the entire test.

Notes: N/A

Time	Notes
60	Changed front filter for train A

Technician Signature: BD

Date: 1/23/18

Section 4

Quality Assurance/Quality Control

QUALITY ASSURANCE/QUALITY CONTROL

OMNI follows the guidelines of ISO/IEC 17025, "General Requirements for the Competence of Testing and Calibration Laboratories," and the quality assurance/quality control (QA/QC) procedures found in *OMNI*'s Quality Assurance Manual.

OMNI's scope of accreditation includes, but is not limited to, the following:

- ANSI (American National Standards Institute) for certification of product to safety standards.
- To perform product safety testing by the International Accreditation Service, Inc. (formerly ICBO ES) under accreditation as a testing laboratory designated TL-130.
- To perform product safety testing as a "Certification Organization" by the Standards Council of Canada (SCC).
- Serving as a testing laboratory for the certification of wood heaters by the U.S. Environmental Protection Agency.

This report is issued within the scope of *OMNI*'s accreditation. Accreditation certificates are available upon request.

The manufacturing facilities and quality control system for the production of the Intrepid FlexBurn at Hearth and Home Technologies were evaluated to determine if sufficient to maintain conformance with OMNI's requirements for product certification. OMNI has concluded that the manufacturing facilities, processes, and quality control system are adequate to produce the appliance congruous with the standards and model codes to which it was evaluated.

This report shall not be reproduced, except in full, without the written approval of OMNI-Test Laboratories, Inc.

Manufacturer's Quality Assurance Plan

The following quality assurance plan has been developed to ensure all that all units within the model line are similar in all material respects that would affect emissions to the sample tested under this report, in accordance with § 60.533 (m) / § 60.5475 (m).

Hearth & Home Technologies – Halifax Manufacturing

EPA Certification Quality Assurance Plan

1. Purpose

   The purpose of the EPA Certification Quality Assurance Plan is to:

   a. Ensure that all wood and wood pellet fueled stoves manufactured by Hearth & Home Technologies, at the Halifax manufacturing facility, meet the requirements set forth in 40 CFR Part 60.
   b. Fulfill the requirements for a Quality Assurance Plan as set forth in 40 CFR Part 60.533 paragraph (m)

2. Scope

   The Quality Assurance Plan is intended to cover all EPA Certified wood and wood pellet fueled stoves manufactured by Hearth & Home Technologies, at the Halifax manufacturing facility.

3. Requirements
   a. Inspections for Conformance to Specifications
      i. The manufacturer shall inspect one stove for every 150 stoves manufactured, within a model line, to verify conformance to the tolerances for all components that affect emissions as listed in 40 CFR Part 60.533 paragraph (k)(2), (3), and (4). The exact serial number of the stove inspected may be within 10 stoves before or 10 stoves after the serial number that occurs exactly on the inspection schedule.
   b. Inspections for Conformance to Emissions:
      i. The manufacturer or his authorized representative shall conduct an emissions test on a randomly selected stove from within a model line, certified under 40 CFR Part 60.533, according to the schedule describer below.
         1. Schedule
            a. Model lines where weighted average certification results were 70% or less than the standard
               i. Model lines with fewer than 2500 stoves manufactured per year
                  1. One for every 10,000 stoves manufactured
               ii. Model lines with greater than 2500 stoves manufactured per year
                  1. One for every 10,000 stoves manufactured or triennially(Whichever is more frequent)
            b. Model lines where weighted average certification test results were within 30% of the standard
               i. Model lines with fewer than 2500 stoves manufactured per year
                  1. One for every 5,000 stoves manufactured

ii. Model lines with greater than 2500 stoves manufactured per year
    1. One for every 5,000 stoves manufactured or annually(Whichever is more frequent)

c. Audits of Conformance to the Quality Assurance Plan
    i. The third-party certifier shall perform at least one unannounced audit of the manufacturer's compliance to the approved Quality Assurance Plan described in this document.
        1. The third-part certifier shall submit a copy of the report, fully detailing each audit, to the EPA(Administrator) and the manufacturer within 30 days of the audit.
        2. The manufacturer will submit corrective actions and/or responses to any deficiencies, identified in the audit, to the third-party certifier and the EPA(Administrator) within 30 days of receiving each audit report.

d. Alternate Schedules for Conformance to Specifications and Emissions
    i. If two consecutive passing audits are conducted for either Conformance to Specifications or Conformance to Emissions as specified in section 3 paragraph (a) or (b) of this document, the frequency of testing may be modified to skip every other required test.
    ii. If five consecutive passing audits are conducted under the modified schedule described in section 3 paragraph (d)(i) of this document, the frequency of testing shall be further modified to skip three consecutive required tests after each required test is completed.
    iii. Auditing shall resume on the frequency specified in section 3 paragraph (a) or (b), as applicable, if an audit failure occurs under a modified schedule.

K List Audit Standard Work

05/25/17

Owner: EPA/OOBA Auditor

1. Receive unit.
    a. Audit unit using appropriate K-List.
    b. Enter all measured values into electronic sheet.
2. If the unit passes without any issues:
    a. Submit completed sheet to Quality Engineer (Jared Gadd) & NPD Manager (Corie Podschelne).
3. If the unit fails to comply
    a. Summarize failures in email to Quality Engineer (Jared Gadd) & NPD Manager (Corie Podschelne).
    b. Submit completed sheet.
    c. Quarantine failed unit with NCM Hold Tag and notify Production scheduler.

Owner: Quality Engineer

1. If audit passes, review results, store passed audits in central location in Quality Folder:

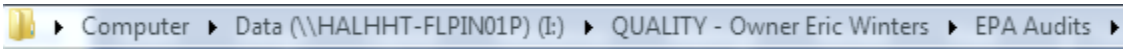

2. If audit fails:
    a. Schedule 8D Team Meeting to Review Failure
        i. Members Included:
            1. Quality Engineer
            2. NPD Engineer
            3. Mfg Engineer for Line
            4. Quality Manager
            5. Line Lead
    b. Drive & Review 8D Corrective Actions in ICAR Meeting.
    c. Save 8D & Corrective Actions in EPA Audit folder for corresponding unit.
    d. Forward failed audit, 8D and Corrective Action to Omni (sbutton@omni-test.com).

EPA Parameter Inspection Sheet Intrepid IV 2115 Woodstove

Inspector: _____ **Facility:** _____

Date of Inspection: _____ **Unit Serial Number:** _____

Build Date: **Catalytic? (highlight one):** **YES** **NO**

	Unit of Measure	Dimension	Measurement Procedure	Actual	Variance	Tolerance	OK
Firebox							
Lower Firebox: Depth	Inches	8.40"	From back of andiron to the front of access cover			.25"	
Height	Inches	10.33"	From grate to bottom of damper housing			.25"	
Width	Inches	16.20"	From side brick to side brick			.25"	
Upper Firebox: Depth	Inches	7.89"	From back of andiron to the front of damper housing			.25"	
Height	Inches	5.85"	From bottom of damper housing to griddle bottom			.25"	
Width	Inches	16.20"	From side brick to side brick			.25"	
Door Opening: Width	Inches	13.20"	Widest point			.25"	
Height	Inches	9.57"	Top of fettle to top of door arch			.25"	
Griddle Opening: Width	Inches	14.22"	Widest point			.25"	
Height	Inches	7.20"	Measue at centerline front to back			.25"	
Removeable Grate	NA		Present?				
Flue Collar							
Internal Dimensions	Inches	6" id Dia.	Inside diameter			.25"	
Bypass Damper Opening							
Location	Inches	11.73"	From grate to bottom of damper opening			.25"	
Width	Inches	8.61"	Widest point			.25"	
Height	Inches	3.16"	Widest point			.25"	
Gasket (Present & Complete)	Nominal	5/16" Rope	Confirm gasket covers complete perimeter				
Mechanism (operation & Lock			Confirm proper operating and locking				
Gap (Observable Gap?)			Yes/No				
Controlled Air Flapper Opening							
Width	Inches	4.25"	Widest point			(+/-) 5%	
Height	Inches	1.25"	Widest point				
Uncontrolled Air inlet Opening							
Width	Inches	4.28"	Widest point			(+/-) 5%	
Height	Inches	1.58"	Widest point				
Controlled Air Outlet							
Location			Either side of Door opening				

Width (4 PLCS)	Inches	.25"	Widest point (4 openings, 2 per side)			(+/-) 5%	
Height (4 PLCS)	Inches	3.00"	Widest point (4 openings, 2 per side)				

	Unit of Measure	Dimension	Measurement Procedure	Actual	Variance	Tolerance	OK
Uncontrolled Air Outlets							
Location			Center bottom of fireback				
5 holes total							
2 of 5 holes	inches	.43 dia	Measure with pins			(+/-) 5%	
3 of 5 holes	inches	.28 dia	Measure with pins				
Engine							
Location			Behind Fireback				
8 semicylindrical holes	inches	.375 dia	Measure before assembly			(+/-) 5%	
6 semicylindrical holes	inches	.312 dia	Measure before assembly				
Gaskets							
Front Doors	nominal	5/16" dia Rope	Present and Continuous				
Glass	nominal	3/16" dia Rope	Present and Continuous				
Griddle	nominal	5/16" dia Rope	Present and Continuous				
Ash Door	nominal	3/8" dia Rope	Present and Continuous				
Refractory							
Side Bricks, 2Pcs6"x10.25"x1.25"	nominal		Confirm Present				
Exterior Dimensions							
Height	24.3"		Measure from floor to top of stove			.25"	
Width	22.3"		Measure at widest point side to side			.25"	
Depth	22.8"		Measure from front of ashlip to back of rear shield			.25"	
Location			Rear of stove				
			Confirm label is securely attached				
			Confirm label is for Intrepid 2115				
			Confirm manufacturing date code is present				
			Record serial # and manufacture date code				
Instructions							
Location			Inside stove				
			Confirm that the Intrepid 2115 Owners Manual is present				

Sample Analysis

Analysis Worksheets
Tared Filter, Probe, and O-Ring Data

OMNI-Test Laboratories, Inc. **ASTM E2780 Wood Heater Run Sheets**

Client: Hearth & Home Project Number: 0135WS038E Run Number: 1

Model: Intrepid IV Catalytic Tracking Number: 2264 Date: 1/3/18

Test Crew: B Davis

OMNI Equipment ID numbers:

ASTM E2515 Lab Sheet

Assembled By:

1/3/18 1610 B Davis

Date/Time in Dessicator:

1/3/18 1610

	Weighing #1	Weighing #2	Weighing #3	Weighing #4	Weighing #5
Date/Time:	1/4/18 0830	1/9/18 0840	1/10/18 0840		
R/H %:	5.2	8.9	6.7		
Temp:	72.4	71.2	68.9		
200 mg Audit:	0.2000	0.2000			
2 g Audit:	1.9998	2.0000			
100 g Audit:	99.9978	99.9970			
Initials:	BL	BL			

Train	Element	ID #	Tare (mg)	Weight (mg)	Weight (mg)	Weight (mg)	Weight (mg)	Weight (mg)
A (First Hour)	Front Filter	D331	111.4	112.0	111.9	✓		
	Rear Filter							
	Probe							
	O-Ring Set							
A (Remainder)	Front Filter	D332	110.7	110.9	110.9	✓		
	Rear Filter	D333	111.8	110.8	110.9	✓		
	Probe	6	115348.8	115349.6	115349.8	✓		
	O-Ring Set	RS51	4129.1	4130.6	4130.6	✓		
B	Front Filter	D334	111.9	112.2	112.2	✓		
	Rear Filter	D335	111.7	111.5	111.5	✓		
	Probe	11	114187.0	114187.6	114187.5	✓		
	O-Ring Set	RS52	4173.2	4173.8	4173.9	✓		
BG	Filter							

Technician Signature: B Davis Date: 1/23/18

OMNI-Test Laboratories, Inc. **ASTM E2780 Wood Heater Run Sheets**

Client: Hearth & Home Project Number: 0135WS038E Run Number: 2

Model: Intrepid IV Catalytic Tracking Number: 2264 Date: 1/4/18

Test Crew: D Davis

OMNI Equipment ID numbers:

ASTM E2515 Lab Sheet

Assembled By:

D Davis

Date/Time in Dessicator:

1/4/18 1645

	Weighing #1	Weighing #2	Weighing #3	Weighing #4	Weighing #5
Date/Time:	1/9/18 0840	1/10/18 0820			
R/H %:	8.9	6.7			
Temp:	71.2	68.9			
200 mg Audit:	0.2000	0.2000			
2 g Audit:	2.0000	1.9999			
100 g Audit:	99.9977	99.9980			
Initials:	JA	JA			

Train	Element	ID #	Tare (mg)	Weight (mg)	Weight (mg)	Weight (mg)	Weight (mg)	Weight (mg)
A (First Hour)	Front Filter	D336	111.2	111.8	111.7			
	Rear Filter							
	Probe							
	O-Ring Set							
A (Remainder)	Front Filter	D337	111.6	111.7	111.6			
	Rear Filter	D338	111.3	111.3	111.3			
	Probe	28	114751.7	114751.8	114751.7			
	O-Ring Set	R553	3349.5	3349.9	3349.9			
B	Front Filter	D335	111.9	112.8	112.7			
	Rear Filter	D340	111.7	111.6	111.6			
	Probe	29	114278.7	114278.5	114278.6			
	O-Ring Set	R554	3267.0	3267.4	3267.3			
BG	Filter							

Technician Signature: D Davis Date: 1/23/18

OMNI-Test Laboratories, Inc. **ASTM E2780 Wood Heater Run Sheets**

Client: Hearth & Home Project Number: 0135WS038E Run Number: 3

Model: Intrepid IV Catalytic Tracking Number: 2264 Date: 1/5/18

Test Crew: B Davis

OMNI Equipment ID numbers:

ASTM E2515 Lab Sheet

Assembled By:

B Davis

Date/Time in Dessicator:

1/5/18 1510

	Weighing #1	Weighing #2	Weighing #3	Weighing #4	Weighing #5
	Date/Time: 1/9/18 0940	Date/Time: 1/10/18 0820	Date/Time:	Date/Time:	Date/Time:
	R/H %: 5.9	R/H %: 6.7	R/H %:	R/H %:	R/H %:
	Temp: 71.2	Temp: 68.9	Temp:	Temp:	Temp:
	200 mg Audit: 0.2000	200 mg Audit: 0.2000	200 mg Audit:	200 mg Audit:	200 mg Audit:
	2 g Audit: 2.0000	2 g Audit: 1.9999	2 g Audit:	2 g Audit:	2 g Audit:
	100 g Audit: 99.9979	100 g Audit 99.9980	100 g Audit	100 g Audit	100 g Audit
	Initials: BL	Initials: BL	Initials:	Initials:	Initials:

Train	Element	ID #	Tare (mg)	Weight (mg)	Weight (mg)	Weight (mg)	Weight (mg)	Weight (mg)
A (First Hour)	Front Filter	D341	111.4	112.4	112.3	✓		
	Rear Filter		1					
	Probe							
	O-Ring Set							
A (Remainder)	Front Filter	D342	111.2	111.7	111.5	✓		
	Rear Filter	D343	112.1	112.1	112.1	✓		
	Probe	30	114329.6	114329.5 ✓	114329.5	✓		
	O-Ring Set	R555	3308.0	3308.1	3308.1	✓		
B	Front Filter	D344	111.5	112.4	112.2	✓		
	Rear Filter	D345	111.9	111.5	111.5	✓		
	Probe	31	114369.1	114369.2	114369.1	✓		
	O-Ring Set	R556	3303.1	3303.5	3303.5	✓		
BG	Filter							

Technician Signature: B Davis Date: 1/23/18

OMNI-Test Laboratories, Inc. **ASTM E2780 Wood Heater Run Sheets**

Client: Hearth & Home Project Number: 0135WS038E Run Number: 4

Model: Intrepid IV Catalytic Tracking Number: 2264 Date: 1/8/18

Test Crew: B Davis

OMNI Equipment ID numbers:

ASTM E2515 Lab Sheet

Assembled By:

B Davis

Date/Time in Dessicator:

1/8/18 1520

	Weighing #1	Weighing #2	Weighing #3	Weighing #4	Weighing #5
Date/Time:	1/9/18 0940	1/10/18 0820	1/11/18 0905		
R/H %:	8.9	6.7	10.3		
Temp:	71.2	68.9	68.5		
200 mg Audit:	0.2000	0.2000	0.1999		
2 g Audit:	2.000	1.9999	1.9998		
100 g Audit:	99.9979	99.9980	99.9981		
Initials:	DC	BC	BC		

Train	Element	ID #	Tare (mg)	Weight (mg)	Weight (mg)	Weight (mg)	Weight (mg)	Weight (mg)
A (First Hour)	Front Filter	D346	111.4	111.7	111.6	✓		
	Rear Filter							
	Probe							
	O-Ring Set							
A (Remainder)	Front Filter	D347	111.4	111.3	111.3	✓		
	Rear Filter	D348	111.0	110.8	110.8	✓		
	Probe	21	114392.8	114393.2	114392.8	114392.7 ✓		
	O-Ring Set	R557	4086.8 ~~4087.0~~	4087.8	4087.8	✓		
B	Front Filter	D349	111.4	111.8	111.8	✓		
	Rear Filter	D372	111.9	111.6	111.6	✓		
	Probe	22	114344.7	114345.1	114344.7	114344.6 ✓		
	O-Ring Set	R558	3306.6	3307.9	3307.8	✓		
BG	Filter							

Technician Signature: B Davis Date: 1/23/18

Tare Sheet: (check one) **Probes** ✓ **47mm Filters**____ **100mm Filters**____ **O-Ring Pair**____

Prepared By: BDAVIS Balance ID #: OMNI-00637 Thermohygrometer ID #: OMNI-00592 Audit Weight ID #/Mass: OMNI-00283A / 100 gram

Placed in Dessicator: Date: / Time: / ID #	Date: 12/12/17 Time: 3:00 RH %: 7.4 T (°F): 72.6 Audit: 99997.8	Date: 12/18/17 Time: 10:04 RH %: 8.3 T (°F): 74.3 Audit: 99997.8	Date: 12-20-17 Time: 10:25 RH %: 9.2 T (°F): 74.6 Audit: 99997.8	Date: 1/2/18 Time: 0830 RH %: 8.9 T (°F): 71.2 Audit: 99997.8	Date Used	Project Number	Run No.
2	115015.4	115014.5	"	"	12/20/17	0135WS038E	1
3	116008.2	116008.6	116008.4	"	↓	↓	↓
OES 3	114768.2	114768.3	"	"	12/21/17	0135WS038E	2
OES 4	114145.3	114145.0	114145.2	"	↓	↓	↓
4	114857.9	114857.9	"	"	12/21/17	0135WS038E	3
OES 5	113573.6	113573.4	"	"	↓	↓	↓
OES 6	113709.9	113709.7 (DL 115348.3)	"	"	12/22/17	0135WS038E	4
6	115348.7	115349.3	115348.6	115348.8	↓ 1/3/18	0135WS038E - CAL	↓ 1
7	114981.0	114981.2	"	"	↓	↓	↓
8	115923.2	115923.1	"	"	1/2/18	0135WS038E	5
9	115692.5	115692.1	"	"	↓	↓	↓
11	114186.8	114187.0	"	"	1/3/18	0135WS038E - CAL	1
12	-						
13	-						
14	-						
15	-						
16	-						
17	-						
18	-						
20	-						
	Initials:	Initials:	Initials:	Initials:			

Final Technician Signature: Date: 1/11/18 Evaluator signature: 1/22/2018

Control No. P-SFDP-0002.xls, Effective date: 2/1/2017

Tare Sheet: (check one) Probes ✓ 47mm Filters ____ 100mm Filters ____ O-Ring Pair ____

Prepared By: BJ Auw Balance ID #: OMSI-00637 Thermohygrometer ID #: OMSI-00592 Audit Weight ID #/Mass: OMSI-00283A / 100 gram

Placed in Dessicator: Date: ____ Time: ____ ID #	Date: 1/3/18 Time: 0840 RH %: 10.2 T (°F): 71.1 Audit: 99.9980	Date: 1/4/18 Time: 0829 RH %: 18.4 T (°F): 69.6 Audit: 99.9980	Date: 1/5/18 Time: 0916 RH %: 27.5 T (°F): 70.5 Audit: 99.9980	Date: 1/10/18 Time: 0820 RH %: 6.7 T (°F): 68.9 Audit: 99.9970	Date Used	Project Number	Run No.
21	114392.2	114392.8	114392.8	✓	1/8/18	0135WS038E-CAT	4
22	114344.3	114344.9	114344.7	✓	↓	↓	↓
23	114076.8	114077.4	114077.5	✓			
24	114126.9	114127.5	114128.1	114127.2	Not used		
25	114299.9	114299.4	114299.4	✓			
27	114273.4	114274.1	114275.0	✓			
28	114751.5	114751.7	✓		1/4/18	0135WS038E-CAT	2
29	114278.5	114278.7	✓		↓	↓	↓
30	114329.4	114329.6	✓		1/5/18	0135WS038E-CAT	3
31	114368.9	114369.1	✓		↓	↓	↓
32	114741.9	114741.8	✓		1/11/18	0226PS025E	1
33	113944.8	113944.2	113944.1	✓	↓	↓	↓
35	114326.4	114326.8	114326.6	✓	1/10/18	0135WS038E-CAT	5
36	114884.5	114884.4	✓		↓	↓	↓
37	114465.6	114465.8	✓				
38	114151.0	114151.1	✓				
58	117066.4	117067.0	117066.9	117066.5	Not used		
59	117784.6	117785.2	117784.2	117784.4	Not used		
62	~~118455.8~~ 117661.3	117661.7	117661.5	✓			
66	114955.3	114955.7	✓				
	Initials: BA	Initials: BA	Initials: BA	Initials: BA			

Final Technician Signature: _____ Date: 1/10/18 Evaluator signature: _____

Control No. P-SFDP-0002.xls, Effective date: 2/1/2017

Tare Sheet: Probes___ 47mm Filters✓ 100mm Filters___ O-Ring Pair___

Date/time Placed in Dessicator:

Thermohygrometer ID #: OMNR-00592

Prepared By: B Davis

Analytical Balance ID #: OMNE-00637

Audit Weight ID #/Mass: OMNR-00283A / 200 mg

ID #	Date: 12/12/17 Time: 3:00 RH %: 7.4 T (°F): 72.6 Audit: 500.1	Date: 12/14/17 Time: 1045 RH %: 8.1 T (°F): 73.6 Audit: 200.0	Date: 12/18/17 Time: 1002 RH %: 8.0 T (°F): 74.2 Audit: 200.0	Date: Time: RH %: T (°F): Audit:	Date Used	Project Number	Run No.
D328	111.8	111.8			1/2/18	0135WS038E	5
D329	112.0	112.1					
D330	110.8	110.6					
D331	111.5	111.4			1/3/18	0135WS038E-CAT	1
D332	110.9	110.7					
D333	111.9	111.8					
D334	111.9	111.9					
D335	111.5	111.7					
D336	111.0	111.2			1/4/18	0135WS038E-CAT	2
D337	111.4	111.6					
D338	111.1	111.3					
D339	111.7	111.9					
D340	111.5	111.7					
D341	111.2	111.4			1/5/18	0135WS038E-CAT	3
D342	111.2	111.2					
D343	112.3	112.1					
D344	111.7	111.5					
D345	111.1	111.7	111.9				
D346	111.4	111.4			1/6/18	0135WS038E-CAT	4
D347	111.5	111.4					
D348	111.1	111.0					
D349	111.3	111.4					
	Initials:	Initials: BD	Initials:	Initials:			

Final Technician Signature: _____ Date: 1/10/18

Control No. P-SFDP-0001.xls, Effective date: 9/9/2015

Evaluator signature: _____ 1/22/2018

Tare Sheet: Probes___ 47mm Filters ✓ 100mm Filters___ O-Ring Pair___

Date/time Placed in Dessicator: 1/4/18 1410

Prepared By: B Davis

Analytical Balance ID #: OMNI-00637

Thermohygrometer ID #: OMNI-00592

Audit Weight ID #/Mass: OMNI-00283A / 200 mg

ID #	Date: 1/5/18 Time: 1425 RH %: 19.8 T (°F): 71.2 Audit: 0.2001	Date: 1/8/18 Time: 10:20 RH %: 14.6 T (°F): 74.4 Audit: 0.2000	Date: 1/9/18 Time: 0820 RH %: 8.6 T (°F): 77 Audit: 0.2000	Date: Time: RH %: T (°F): Audit:	Date Used	Project Number	Run No.
D372	111.7	111.9			1/8/18	0135WS038E-CAT	4
D373	111.4	111.5			1/11/18	0221PS025E	
D374	110.5	110.7					
D375	111.0	111.2					
D376	111.7	111.6					
D377	111.1	111.2					
D378	111.6	111.5			1/16/18	0135WS038E-CAT	5
D379	111.3	111.5					
D380	111.5	111.7					
D381	110.9	110.8					
D382	111.2	111.4					
D383	111.2	111.2					
D384	110.8	110.7					
D385	111.0	111.2					
D386	110.3	110.5					
D387	111.0	111.2					
D388	110.6	110.8					
D389	111.1	111.2					
D390	111.2	111.7	111.8				
D391	110.4	110.6					
D392	111.2	111.4					
D393	110.9	111.1					
	Initials: BR	Initials: BR	Initials: BR	Initials:			

Final Technician Signature: [signature]

Control No. P-SFDP-0001.xls, Effective date: 9/9/2015

Date: 1/10/18

Evaluator signature: [signature]

Tare Sheet: (check one) Probes_____ 47mm Filters_____ 100mm Filters_____ O-Ring Pair ✓

Prepared By: B. Davis Balance ID #: OMNI-00637 Thermohygrometer ID #: OMNI-00592 Audit Weight ID #/Mass: OMNI-00283A 1 5 gram

Placed in Dessicator: Date: _____ Time: _____ ID #	Date: 12/12/17 Time: 3:00 RH %: 6.4 T (°F): 73.2 Audit: 4999.9	Date: 12/18/17 Time: 10:04 RH %: 7.3 T (°F): 74.8 Audit: 5000.0	Date: 12-20-17 Time: 10:25 RH %: 6.6 T (°F): 73.6 Audit: 5000.0	Date: _____ Time: _____ RH %: _____ T (°F): _____ Audit: _____	Date Used	Project Number	Run No.
R541	3541.4	3541.5			12/20/17	0135WS038E	1
R542	3499.6	3499.0			↓	↓	↓
R543	3574.4	3574.5			12/21/17	0135WS038E	2
R544	3529.1	3529.6			↓	↓	↓
R545	4154.6	4154.6			12/21/17	0135WS038E	3
R546	3329.9	3329.6			↓	↓	↓
R547	3397.1	3397.3			12/22/17	0135WS038E	4
R548	3295.4	3295.5			↓	↓	↓
R549	3273.6	3273.8			1/2/18	0135WS038E	5
R550	3405.9	3406.0			↓	↓	↓
R551	4129.3	4129.1			1/3/18	0135WS038E-CAT	1
R552	4173.9	4173.4	4173.2	✓	↓	↓	↓
R553	3349.6	3349.5			1/4/18	0135WS038E-CAT	2
R554	3267.2	3267.0			↓	↓	↓
R555	3307.9	3308.0			1/5/18	0135WS038E-CAT	3
R556	3303.1	3303.1			↓	↓	↓
R557	-						
R558	-						
R559	-						
R560							
	Initials: A	Initials: DL	Initials: BL	Initials:			

Final Technician Signature: _____ Date: 1/10/18 Evaluator signature: _____ 1/22/2018

Control No. P-SFDP-0002.xls, Effective date: 2/1/2017

Tare Sheet: (check one) **Probes**_____ **47mm Filters**_____ **100mm Filters**_____ **O-Ring Pair** ✓

Prepared By: B Davis Balance ID #: omni 00637 Thermohygrometer ID #: omni - 00592 Audit Weight ID #/Mass: omni-00283A / 5gram ~~500~~

Placed in Dessicator: Date: ____ Time: ____ ID #	Date: 1/4/18 Time: 0840 RH %: 19.6 T (°F): 73.4 Audit: 5.0001	Date: 1/5/18 Time: 0920 RH %: 20.4 T (°F): 71.4 Audit: 5.0000	Date: 1/8/18 Time: 0810 RH %: 18.9 T (°F): 70.6 Audit: 5.0000	Date: ____ Time: ____ RH %: ____ T (°F): ____ Audit: ____	Date Used	Project Number	Run No.
R557	4086.6	4087.0	4086.8		1/8/18	0135WS038E-CAT	4
R558	3306.4	3306.7	3306.6		↓	↓	↓
R559	4148.1	4148.2			1/11/18	0226PS029E	1
R560	3277.3	3277.6	3277.4		↓	↓	↓
R561	4102.1	4102.5	4102.3		1/16/18	0135WS038E-CAT	5
R562	3295.0	3295.4	3295.1		↓	↓	↓
R563	3376.0	3376.2					
R564	3395.3	3395.5					
R565	4140.6	4140.6					
R566	4135.3	4135.6	4135.2				
R567	3295.7	3295.9					
R568	3367.0	3367.5	3367.2				
R569	3354.7	3355.2	3354.7				
R570	3301.0	3301.3	3300.9				
R571	3330.3	3330.4					
R572	4198.6	4198.9	4198.6				
—							
—							
—							
—							
	Initials: BR	Initials: BR	Initials: BR	Initials:			

Final Technician Signature: [signature] Date: 1/10/18 Evaluator signature: [signature]

Control No. P-SFDP-0002.xls, Effective date: 2/1/2017

Calibrations

Methods EPA 28R, ASTM E2515, ASTM E2780

ID #	Lab Name/Purpose	Log Name	Attachment Type
1	Calibrator Dry Gas Meter	Rockwell Int'l Standard Test Meter	Calibration Certificate
637	Scale-Analytical Balance	Mettler Analytical Balance	Calibration Certificate
353	Scale	ELEC-weighing Scale MTW-150K	Calibration Log
283A	Audit Weights	21-Piece weight set	Calibration Certificate
132	10 lb Weight	Weight Standard, 10 lb.	Calibration Certificate
185	Platform Scale	Weigh-Tronix Platform Scale	Calibration Certificate
209	Barometer	Barometer – Princo	Manual Cover
296-T58	Tape Measure	Stanley Tape Measure	Calibration Log
335	Sample Box / Dry Gas Meter	Apex Automated Emissions Sampling Box	Calibration Log
336	Sample Box / Dry Gas Meter	Apex Automated Emissions Sampling Box	Calibration Log
340	Wood Moisture Meter	Moisture Meter - Delmhorst	See Test Run Notes
592	Thermohygrometer	Omega Digital Thermohygrometer	Calibration Log
410	Microtector	Dwyer Microtector	Calibration Certificate
594	Combustion Gas Analyzer	Infrared Gas Analyzer	Manual, See Test Run Notes
567	Stopwatch	Robotic Stopwatch SC-606W	Calibration Log
431	Moisture Meter Calibrator	Delmhorst Moisture Content Calibrator	Calibration Log
265	Vaneometer	Dwyer Vaneometer	Manual



CERTIFICATE OF CALIBRATION

CUSTOMER:	**OMNI TEST LABS INC.** PORTLAND OR	**CALIBRATION DATE:**	10/30/17
PO NUMBER:	170154	**CALIBRATION DUE:**	10/30/18
INST. MANUFACTURER:	ROCKWELL	**PROCEDURE:**	NAVAIR 17-20MG-02
INST. DESCRIPTION:	P.D. METER	**CALIBRATION FLUID:**	AIR @ 14.7 PSIA 70 F
MODEL NUMBER:	S-275	**STANDARD(S) USED:**	A4, A24 DUE 04-2020
SERIAL NUMBER:	684390L	**NIST TRACE #' S:**	1446135470, 1453296155
RATED UNCERTAINTY:	+/- .5 % RD.	**AMBIENT CONDITIONS:**	761 mm HGA 48 % RH 72 F
UNCERTAINTY GIVEN:	TOTAL measurement uncertainty: +/- .190 % RD. K=2	**CERTIFICATE FILE #:**	426663.17

NOTES: AS RECEIVED/ AS LEFT WITHIN SPECS. REFERENCE CONDITIONS ARE: 760 mm HGA 70 F **OMNI-00001**

TEST POINT NUMBER	UUT INDICATED SCFH	DM.STD. ACTUAL SCFH	CORRECTION FACTOR	K FACTOR
1	0.7314	0.73	0.99805	60.117
2	10.0745	10.05	0.99757	60.146
3	53.2919	53.14	0.99715	60.171
4	100.2740	100.02	0.99747	60.152
5	136.1637	135.88	0.99792	60.125
6	176.4641	176.07	0.99777	60.134
7	215.6504	215.14	0.99763	60.142
8	250.4925	250.05	0.99823	60.106
		AVERAGE (Y)=	0.99772292	

All instruments used in the performance of the shown calibration have traceability to the National Institute of Standards and Technology (NIST). The uncertainty ratio between the calibration standards (DM.STD.) used and the unit under test (UUT) is a minimum of 4:1, unless otherwise noted. Calibration has been performed per the shown procedure number, in accordance with ISO 10012:2003, ISO 17025:2005, ANSI/NCSL-Z-540.3, and/or MIL-STD-45662A. Test methods: API2530-92 & ASME MFC-3M-1989.

Dick Munns Company • 11133 Winners Circle • Los Alamitos, CA 90720
Phone (714) 827-1215 • Fax (714) 827-0823

This Calibration Certificate shall not be reproduced except in full, without approval by DICK MUNNS COMPANY. The data shown applies only to the instrument being calibrated and under the stated conditions of calibration.

Date: 10/30/2017

Approved By:

Calibration Technician:

Certificate of Calibration

Certificate Number: **655889**

JJ Calibrations, Inc.
7007 SE Lake Rd
Portland, OR 97267-2105
Phone 503.786.3005
FAX 503.786.2994

Omni-Test Laboratories
13327 NE Airport Way
Portland, OR 97230

OnSite

0723.01
Calibration

PO: **170142**
Order Date: **08/07/2017**
Authorized By: **N/A**

Property #: **OMNI-00637**
User: **N/A**
Department: **N/A**
Make: **Mettler Toledo**
Model: **MS104TS/00**
Serial #: **B729400181**
Description: **Scale, Analytical, 120g**
Procedure: **DCN 500887**
Accuracy: **±0.0005g**

Calibrated on: **08/07/2017**
*Recommended Due: **02/07/2018**
Environment: **22 °C 45 % RH**
* As Received: **Within Tolerance**
* As Returned: **Within Tolerance**
Action Taken: **Calibrated**
Technician: **34**

Remarks: * Many factors may cause the unit to drift out of calibration before the recommended due date. Any reported error is the absolute value between the reference and the unit. Uncertainties include the effects of the unit.

Standards Used

Std ID	Manufacturer	Model	Nomenclature	Due Date	Trace ID
256A	Rice Lake	W0133K	Mass Set	10/28/2017	616126

Measurement Data

Parameter / Measurement Description	Range Unit	Reference	Min	Max	*Error	UUT	Uncertainty Accredited = ✓
Before/After							
Force							
	g	10.00000	9.9995	10.0005	0.0001	10.0001 g	5.7E-04 ✓
	g	30.00000	29.9995	30.0005	0.0001	30.0001 g	5.7E-04 ✓
	g	60.00000	59.9995	60.0005	0.0003	60.0003 g	5.7E-04 ✓
	g	90.00000	89.9995	90.0005	0.0002	90.0002 g	5.7E-04 ✓
	g	120.00000	119.9995	120.0005	0.0003	120.0003 g	5.7E-04 ✓

JJ Calibrations, Inc. certifies that this instrument has been calibrated in accordance with the JJ Calibrations Quality Assurance Manual with the stated procedure using standards that are traceable to the National Institute of Standards and Technology (NIST), or other National Measurement Institutes (NMI's), or by using natural physical constants, intrinsic standards or ratio calibration techniques. The quality system and this certificate are in compliance with ANSI/NCSL Z540-1-1994, ISO/IEC 17025-2005, ISO 10012-1, the ISO 9000 family and QS 9000. The expanded uncertainties of measurements for this calibration are based upon 95% (2 sigma) confidence limits. Unless otherwise stated, a test accuracy ratio (TAR) of 4:1, if achievable, is maintained. The results reported herein apply only to the calibration of the item described above. This report may not be reproduced, except in full, without prior written consent of JJ Calibrations, Inc.
JJ Calibrations, Inc. quality system has been assessed and accredited to ISO/IEC 17025:2005.

Reviewer

3 Issued 08/14/2017 Rev # 15

Inspector

Calibration sheet For MTW-150K S/N MKW04072 (OMNI-00353)

Calibration Interval: 12 months

Parameter	Date	Omni reference weights used	Weight	Scale readout	Compliance	
Mass in Lbs.	12-11-08	00132	10 lb	10.0 lbs	✓	
	12-11-08	00132, 255	20 lb	20.0 lbs	✓	
	12-11-08	00132, 255, 274	30 lb	30.0 lbs	✓	
	3/9/11	00132	10LBS	10LBS	☒	
	3/9/11	132/255	10LBSx2	20LB	☒	
	3/9/11	132/255/274	10LBSx3	30LB	☒	
	8/10/2012	00132	10 lb	10.0 lb	✓	J. Clark
	8/10/2012	132, 255	20 lb	20.0 lb	✓	J. Clark
	8/10/2012	132, 255, 274	30 lb	30.0 lb	✓	J. Clark
	7/19/2013	00132	10 lb	10.0 lb	✓	J. Clark
	7/19/2013	132, 255	20 lb	20.0 lb	✓	J. Clark
	7/19/2013	132, 255, 274	30 lb	30.0 lb	✓	J. Clark
	7/8-9/2014	- 00132	10 lb	10.0 lb	✓	J. Clark
	7/9/2014	- 00132, - 00255	20 lb	20.0 lb	✓	J. Clark
	7/9/2014	-00132, -00255, -00274	30 lb	30.0 lb	✓	J. Clark
	7/13/2015	- 00132	10 lb	10.0 lb	✓	J. Clark
	7/13/2015	-00132, -00255	20 lb	20.0 lb	✓	
	7/13/2015	-00132, -00255, -00274	30 lb	30.0 lb	✓	
	7/26/2016	Omni - 00283B	1 kg	2.2 lb	✓	B Davis
	7/26/2016	Omni - 00274	10 lb	12.2 lb	✓	B Davis
	7/26/2016	Omni - 00255	10 lb	22.2 lb	✓	B Davis
	8/14/17	Omni - 00283B	1 kg	2.2 lbs	—	B
	8/14/17	omni - 00274	10.0	10.0 12.2	—	B
	8/14/17	omni - 00255	10.0	22.2	—	B

Certificate of Calibration

Certificate Number: **543402**

JJ Calibrations, Inc.
7007 SE Lake Rd
Portland, OR 97267-2105
Phone 503.786.3005
FAX 503.786.2994

Omni-Test Laboratories
13327 NE Airport Way
Portland, OR 97230

0723.01
Calibration

PO: OTL-13-031
Order Date: 09/27/2013
Authorized By: N/A

Property #: OMNI-00283A
User: N/A
Department: N/A
Make: Troemner Inc
Model: 1mg-100g (Class F)
Serial #: 47883
Description: Mass Set, 21 Pc.
Procedure: DCN 500901
Accuracy: Class F

Calibrated on: 10/09/2013
*Recommended Due: 10/09/2018
Environment: 20 °C 41 % RH
As Received: Other - See Remarks
As Returned: Within Tolerance
Action Taken: Calibrated
Technician: 34

Remarks: * Any number of factors may cause the calibration item to drift out of calibration before the recommended interval has expired

Changed set from a Class 4 to a Class F per Jeremy Clark.
Received missing 1g weight.
Refer to attachment for measurement results.

Standards Used

Std ID	Manufacturer	Model	Nomenclature	Due Date	Trace ID
432A	Sartorius	C-44	Microbalance 5.1g	03/11/2014	517747
479A	Sartorius	MC210S	Scale, 210g	02/22/2014	517755
503A	Rice Lake	1mg-200g (Class O)	Mass Set	12/07/2013	517746
723A	Rice Lake	1mg-200g (Class O)	Mass Set	09/05/2014	540048

JJ Calibrations, Inc. certifies that this instrument has been calibrated in accordance with the JJ Calibrations Quality Assurance Manual with the stated procedure using standards that are traceable to the National Institute of Standards and Technology (NIST), or other National Measurement Institutes (NMI's), or by using natural physical constants, intrinsic standards or ratio calibration techniques. The quality system and this certificate are in compliance with ANSI/NCSL Z540-1-1994, ISO/IEC 17025-2005, ISO 10012-1, the ISO 9000 family and QS 9000. The expanded uncertainties of measurements for this calibration are based upon 95% (2 sigma) confidence limits. Unless otherwise stated, a test accuracy ratio (TAR) of 4:1, if achievable, is maintained. The results reported herein apply only to the calibration of the item described above. This report may not be reproduced, except in full, without prior written consent of JJ Calibrations, Inc.
JJ Calibrations, Inc. quality system has been assessed and accredited to ISO/IEC 17025:2005.

Reviewer

3 Issued 10/11/2013 Rev # 14

Inspector

JJ Calibrations, Inc.

Manufacturer: Troemner Inc.
Model: 1mg-100g (Class F)
Nomenclature: Mass Set, 21 Pc.
Serial: 47883

Certificate #: 543402
Date: 09Oct2013
Technician: 34
Calibration Interval: 60 Months

Parameter		Nominal	JJ Standard	UUT	UUT ± Limit	Uncertainty ±
Mass Verification						
Data in mg		1	0.996	1.048	0.100	0.0115
	dot	2	2.002	1.973	0.120	0.0115
		2	2.002	2.048	0.120	0.0115
		5	4.996	5.033	0.170	0.0115
		10	10.000	10.053	0.210	0.0115
	dot	20	19.999	19.966	0.260	0.0115
		20	19.999	20.069	0.260	0.0115
		50	49.998	50.018	0.350	0.0115
		100	99.998	100.144	0.430	0.0115
	dot	200	199.999	200.045	0.540	0.0115
		200	199.999	199.967	0.540	0.0115
		500	499.996	500.334	0.720	0.0115
Data in grams		1		Missing		
	dot	2	2.000000	1.999888	0.0011	0.0000394
		2	2.000000	2.000335	0.0011	0.0000394
		5	5.000002	4.999996	0.0015	0.0000395
		10	9.99998	9.99984	0.0020	0.0000580
	dot	20	19.99999	20.00100	0.0040	0.0000855
		20	19.99999	20.00079	0.0040	0.0000855
		50	49.99997	49.99949	0.0100	0.0001390
		100	99.99999	99.99802	0.0200	0.0002900

Supplement Data Sheet
Bold Italics indicates Out of Tolerance Value.

SCALE WEIGHT CALIBRATION DATA SHEET

Weight to be calibrated: 10 lb

ID Number: 132

Standard Calibration Weight: 10 lb

ID Number: 256

Scale Used: MTW-150K

ID Number: 353

Date: 2/19/13 By: A. Kravitz

Standard Weight (A) (Lb.)	Weight Verified (B) (Lb.)	Difference (A - B)	% Error
10.0	10.0	0.0	0

*Acceptable tolerance is 1%.

This calibration is traceable to NIST using calibrated standard weights.

Technician signature: Date: 2/19/13

Established 1974

QUALITY CONTROL SERVICES

LABORATORY EQUIPMENT • SALES • SERVICE • CALIBRATION • REPAIRS
2340 SE 11TH Ave. Portland, Oregon 97214 • Box 14831 Portland, Oregon 97293
(503) 236-2712 • FAX (503) 235-2535 • www.qc-services.com

ACCREDITED
Calibration Services
Certificate Number: 1550.01
Laboratory code: 115953

OMNI-Test Laboratories, Inc.
13327 NE Airport Way
Portland, OR 97230

Report Number: OMNE0321676171004

A2LA ACCREDITED
CERTIFICATE OF CALIBRATION WITH DATA

INSTRUMENT INFORMATION

Item	Make	Model	Serial Number	Customer ID	Location
Scale	Weigh-Tronix	WI-127 1000x0.1lb	21676	185	Lab
Units	**Readability**	**SOP**	**Cal Date**	**Last Cal Date**	**Cal Due Date**
lbs	0.1	QC033	10/4/17	10/11/16	10/2018

FUNCTIONAL CHECKS

SHIFT TEST	LINEARITY	REPEATABILITY	ENVIRONMENTAL CONDITIONS
Test Wt: 500 Tol: 0.5	Test Wt: HB44 Tol: HB44	Test Wt: 200 Tol: 0.2	☐ Good ☑ Fair ☐ Poor
As-Found: Pass:☑ Fail:☐	As-Found: Pass:☑ Fail:☐	As-Found: Pass:☑ Fail:☐	Temperature: 21.0°C
As-Left: Pass:☑ Fail:☐	As-Left: Pass:☑ Fail:☐	As-Left: Pass:☑ Fail:☐	

CALIBRATION DATA

Standard	As-Found	As-Left	Expanded Uncertainty
1000	1000.0	1000.0	0.12
700	700.0	700.0	0.12
500	500.0	500.0	0.08
200	200.0	200.0	0.08
100	100.0	100.0	0.05
50	50.0	50.0	0.05

CALIBRATION STANDARDS

Item	Make	Model	Serial Number	Cal Date	Cal Due Date	NIST ID
Avoirdupois Cast W	Rice Lake	25 and 50lb	PWO990-CA	11/4/15	11/2017	20152112

Permanent Information Concerning this Equipment:

Comments/Information Concerning this Calibration

Report prepared/reviewed by: _____ **Date:** 10.4.17 **Technician:** D.Oudeans
Signature: _____

THIS CERTIFICATE SHALL NOT BE REPRODUCED, EXCEPT IN FULL, WITHOUT THE APPROVAL OF QUALITY CONTROL SERVICES, INC.

The uncertainty is calculated according to the ISO Guide to the Expression of Uncertainty in Measurement and includes the uncertainty of standards used combined with the observed standard deviation of the unit under test. The uncertainty is expanded with a k factor of 2 for an approximate 95% level of confidence. Instruments listed above were calibrated using standards traceable to the National Institute of Standards and Technology (NIST). Calibration data reflect results at the time and location of calibration. Calibration data should be reviewed to insure that the instrument is performing to its required accuracy.

Quality Control Services
Report of Service and Calibration

2340 S.E. 11TH AVENUE
PORTLAND, OR 97214
PHONE 503-236-2712

53843

Sold To OMNI-Test Laboratories, Inc. PT ID: OMNE03 P.O. No: 170148
Address PO Box 301367 Contact: Bruce Davis
City Portland, OR 97294 Phone: 503-643-3788
Ship To 13327 NE Airport Way Portland, OR 97230 Email: bdavis@omni-test.com

No	Item	Make	Model	Serial Number	Location	Contact	Rate	Date Svc'd 2017	Tech	Cust ID
1	Scale	Weigh-Tronix	WI-125x5000x0	53719	Lab	Ken Morgan	$150.00	104	KD	356
2	Scale	Weigh-Tronix	WI-127 1000x0.	21676	Lab	Ken Morgan	$150.00	104	DW	185

Service / Calibration Documentation Requirements
- ☐ Certificate of Calibration
- ☐ Calibration with Data
- ☒ A2LA Certificate

Received By: _____ Date: _____

Comments: Truck charge $95.00
$125.00 Balance Letter



453
National
Weather
Service
Type

OMNI 00209

Instruction Booklet

for use with

PRINCO

Fortin type mercurial

Barometers

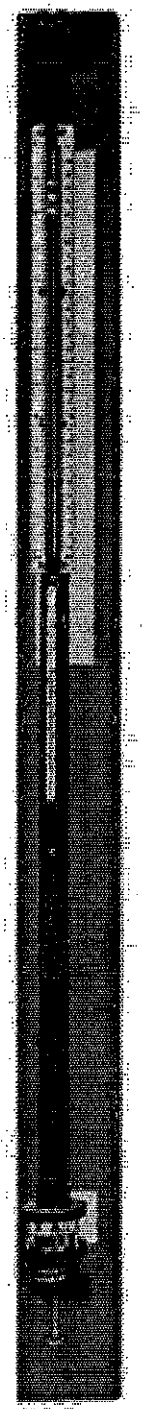

469
NOVA™
Economy
Model

Manufactured by

PRINCO INSTRUMENTS, INC.
1020 Industrial Blvd.
Southampton, Pa. 18966-4095
U.S.A.

Phone: 215 355-1500
Fax: 215 355-7766

OMNI Environmental Services, Inc.
OMNI-Test Laboratories, Inc.

Tape Measure Calibration Log

Place the calibrated 12" ruler under the tape measure and verify that each ½" (i.e. 1.5", 2", 2.5") between 0 and 36" is within 1/8".

Calibrated using OMNI-00281

Tape Measure Number	Description	Cal Dates				Technician Initials			
OMNI-00296-T55	Dewalt 16' Tape Measure	12/12/16				BD			
OMNI-00296-T56	Dewalt 25' Tape Measure	12/12/16				BD			
OMNI-00296-T59	Dewalt 25' Tape Measures	12/12/16				BD			
OMNI-00296-T58	Dewalt 25' Tape measure	3/9/17				BD			

Thermal Metering System Calibration
Y Factor

Manufacturer:	APEX
Model:	XC-60-EP
Serial Number:	606001
OMNI Tracking No.:	OMNI-00335
Calibrated Orifice:	☐Yes

Previous Calibration Comparision

Date	1/3/2017	Acceptable Deviation (5%)	Deviation
y Factor	0.984	0.0492	0.003
Acceptance	Acceptable		

Current Calibration

Acceptable y Deviation	0.020
Maximum y Deviation	0.005
Acceptable dH@ Deviation	N/A
Maximum dH@ Deviation	N/A
Acceptance	Acceptable

Average Gas Meter y Factor	Orifice Meter dH@
0.981	N/A

Calibration Date:	07/18/17	
Calibrated by:	B. Davis	
Calibration Frequency:	Six months	
Next Calibration Due:	1/18/2018	
Instrument Range:	1.000	cfm
Standard Temp.:	68	oF
Standard Press.:	29.92	"Hg
Barometric Press., Pb:	30.08	"Hg
Signature/Date:		7/18/2017

7/19/2017

Reference Standard *			
Standard Calibrator	Model	Standard Test Meter	
	S/N	OMNI-00001	
	Calib. Date	27-Oct-16	
	Calib. Value	0.9823	y factor (ref)

Calibration Parameters	Run 1	Run 2	Run 3
Reference Meter Pressure ("H2O), Pr	0.00	0.00	0.00
DGM Pressure ("H2O), Pd	2.25	1.30	0.75
Initial Reference Meter	749.4	756.7	762.5
Final Reference Meter	756.6	762.4	770.3
Initial DGM	0	0	0
Final DGM	7.245	5.798	7.977
Temp. Ref. Meter (°F), Tr	71.5	72.7	73.9
Temperature DGM (°F), Td	80.0	82.0	84.0
Time (min)	34.0	35.0	63.5
Net Volume Ref. Meter, Vr	7.200	5.700	7.800
Net Volume DGM, Vd	7.245	5.798	7.977
Gas Meter y Factor =	**0.986**	**0.979**	**0.977**
Gas Meter y Factor Deviation (from avg.)	0.005	0.001	0.004
Orifice dH@	**N/A**	**N/A**	**N/A**
Orifice dH@ Deviation (from avg.)	N/A	N/A	N/A

where:

1. Deviation = |Average value for all runs - current run value|

** 2. y = [Vr x (y factor (ref)) x (Pb + (Pr/ 13.6)) x (Td + 460)]/ [Vd x (Pb + (Pd / 13.6)) x (Tr + 460)]

** 3. dH@ = 0.0317 x Pd / (Pb (Td + 460)) x [(Tr + 460) x time) / Vr]^2

* Reference calibration is traceable to NIST through NIST Test # 40674, Kimble ASTM E1272, or NIST traceable laboratory

** Equations come from EPA Method 5

The uncertainty of measurement is ±0.14 ft^3/min. This is based on the reference standard having a TAR (Test Accuracy Ratio) of at least 4:1.

DIFFERENTIAL PRESSURE GAUGE CALIBRATION DATA SHEET

Instrument to be calibrated: Pressure Transducer

Maximum Range: 0-2" W.C. ID Number: OMNI-00335

Calibration Instrument: Digital Manometer ID Number: OMNI-00633

Date: 7/18/17 By: B. Davis

This form is to be used only in conjunction with Standard Procedure C-SPC.

Range of Calibration Point ("WC)	Digital Manometer Input ("WC)	Pressure Gauge Response ("WC)	Difference (Input - Response)	% Error of Full Span*
0-20% Max. Range 0 – 0.4	0.034 0.203	0.030 0.203	0.000	0.2 Ø
20-40% Max. Range 0.4 – 0.8	0.563	0.574	0.011	0.55
40-60% Max. Range 0.8 – 1.2	1.001	1.023	0.022	1.10
60-80% Max. Range 1.2 – 1.6	1.464 ~~0.147~~	1.503	0.039	1.95
80-100% Max. Range 1.6 – 2.0	1.940	1.994	0.054	2.7

*Acceptable tolerance is 4%.

The uncertainty of measurement is ±0.4" WC. This is based on the reference standard having a TAR (Test Accuracy Ratio) of at least 4:1.

Technician signature: _____ Date: 7/18/17

Reviewed by: _____ Date: 7/19/2017

Temperature Calibration
EPA Method 28R, ASTM 2515

Booth:	Temperature Monitor Type:	Equipment Number:
E1	National Instruments Logger	00335, 00336

Reference Meter Equipment Number: 00373	Calibration Due Date: 8/02/17

Calibration Performed By:	Date:	Ambient Temperature:	Barometric Pressure:
B. Davis	7/18/17	68	30.08

Input Temperature (F)	Ambient	Meter A	Meter B	Filter A	Filter B	Tunnel	FB Interior
0	1	1	1	1	1	0	0
100	101	101	101	101	100	100	100
300	301	300	300	300	300	300	300
500	501	500	500	500	500	500	500
700	701	700	700	700	700	700	700
1000	1001	1000	1000	1000	1000	1000	1000

Input (F)	FB Top	FB Bottom	FB Back	FB Left	FB Right	Imp A	Imp B	Cat	Stack
0	0	0	0	0	0	1	1	1	0
100	100	100	100	100	100	101	101	100	100
300	300	300	300	300	300	300	300	300	300
500	500	500	500	500	500	500	500	500	500
700	700	700	700	700	700	700	700	700	700
1000	1000	1000	1000	1000	1000	1000	1000	1000	1000
1500								1500	
2000								2000	

Technician signature: _____ Date: 7/18/17

Reviewed By: _____ Date: 7/19/2017

Thermal Metering System Calibration
Y Factor

Manufacturer:	APEX
Model:	XC-60-EP
Serial Number:	606002
OMNI Tracking No.:	OMNI-00336
Calibrated Orifice:	☐Yes

Previous Calibration Comparision

Date	1/3/2017	Acceptable Deviation (5%)	Deviation
y Factor	0.99	0.0495	0.006
Acceptance	Acceptable		

Current Calibration

Acceptable y Deviation	0.020
Maximum y Deviation	0.002
Acceptable dH@ Deviation	N/A
Maximum dH@ Deviation	N/A
Acceptance	Acceptable

Average Gas Meter y Factor	Orifice Meter dH@
0.984	N/A

Calibration Date:	07/18/17	
Calibrated by:	B. Davis	
Calibration Frequency:	Six months	
Next Calibration Due:	1/18/2018	
Instrument Range:	1.000	cfm
Standard Temp.:	68	oF
Standard Press.:	29.92	"Hg
Barometric Press., Pb:	30.08	"Hg
Signature/Date:	7/18/17	
	7/19/2017	

Reference Standard *			
Standard Calibrator	Model	Standard Test Meter	
	S/N	OMNI-00001	
	Calib. Date	27-Oct-16	
	Calib. Value	0.9823	y factor (ref)

Calibration Parameters	Run 1	Run 2	Run 3
Reference Meter Pressure ("H2O), Pr	0.00	0.00	0.00
DGM Pressure ("H2O), Pd	1.95	1.20	0.80
Initial Reference Meter	771.3	777.8	785.1
Final Reference Meter	777.7	785	790.6
Initial DGM	0	0	0
Final DGM	6.459	7.298	5.583
Temp. Ref. Meter (°F), Tr	75.1	76.1	77.8
Temperature DGM (°F), Td	85.0	85.0	88.0
Time (min)	30.0	41.8	40.0
Net Volume Ref. Meter, Vr	6.400	7.200	5.500
Net Volume DGM, Vd	6.459	7.298	5.583
Gas Meter y Factor =	**0.987**	**0.982**	**0.984**
Gas Meter y Factor Deviation (from avg.)	0.002	0.002	0.000
Orifice dH@	**N/A**	**N/A**	**N/A**
Orifice dH@ Deviation (from avg.)	N/A	N/A	N/A

where:

1. Deviation = |Average value for all runs - current run value|

** 2. y = [Vr x (y factor (ref)) x (Pb + (Pr/ 13.6)) x (Td + 460)]/ [Vd x (Pb + (Pd / 13.6)) x (Tr + 460)]

** 3. dH@ = 0.0317 x Pd / (Pb (Td + 460)) x [(Tr + 460) x time) / Vr]^2

* Reference calibration is traceable to NIST through NIST Test # 40674, Kimble ASTM E1272, or NIST traceable laboratory

** Equations come from EPA Method 5

The uncertainty of measurement is ±0.14 ft^3/min. This is based on the reference standard having a TAR (Test Accuracy Ratio) of at least 4:1.

DIFFERENTIAL PRESSURE GAUGE CALIBRATION DATA SHEET

Instrument to be calibrated: Pressure Transducer

Maximum Range: 0-2" W.C. ID Number: OMNI-00336

Calibration Instrument: Digital Manometer ID Number: OMNI-00633

Date: 7/18/17 By: B. Davis

This form is to be used only in conjunction with Standard Procedure C-SPC.

Range of Calibration Point ("WC)	Digital Manometer Input ("WC)	Pressure Gauge Response ("WC)	Difference (Input - Response)	% Error of Full Span*
0-20% Max. Range 0 – 0.4	0.044 0.260	0.039 0.256	0.005 0.004	0.25 0.20
20-40% Max. Range 0.4 – 0.8	0.693	0.696	0.003	0.15
40-60% Max. Range 0.8 – 1.2	1.021	1.029	0.008	0.40
60-80% Max. Range 1.2 – 1.6	1.529	1.540	0.011	0.55
80-100% Max. Range 1.6 – 2.0	1.917	1.940	0.023	1.15

*Acceptable tolerance is 4%.

The uncertainty of measurement is ±0.4" WC. This is based on the reference standard having a TAR (Test Accuracy Ratio) of at least 4:1.

Technician signature: _____ Date: 7/18/17

Reviewed by: _____ Date: 7/19/2017

Temperature Calibration
EPA Method 28R, ASTM 2515

Booth:	Temperature Monitor Type:	Equipment Number:
E1	National Instruments Logger	00335, 00336

Reference Meter Equipment Number: 00373	Calibration Due Date: 8/02/17

Calibration Performed By:	Date:	Ambient Temperature:	Barometric Pressure:
B. Davis	7/18/17	68	30.08

Input Temperature (F)	Ambient	Meter A	Meter B	Filter A	Filter B	Tunnel	FB Interior
0	1	1	1	1	1	0	0
100	101	101	101	101	100	100	100
300	301	300	300	300	300	300	300
500	501	500	500	500	500	500	500
700	701	700	700	700	700	700	700
1000	1001	1000	1000	1000	1000	1000	1000

Input (F)	FB Top	FB Bottom	FB Back	FB Left	FB Right	Imp A	Imp B	Cat	Stack
0	0	0	0	0	0	1	1	1	0
100	100	100	100	100	100	101	101	100	100
300	300	300	300	300	300	300	300	300	300
500	500	500	500	500	500	500	500	500	500
700	700	700	700	700	700	700	700	700	700
1000	1000	1000	1000	1000	1000	1000	1000	1000	1000
1500								1500	
2000								2000	

Technician signature: _____ Date: 7/18/17

Reviewed By: _____ Date: 7/19/2017

J-2000

owners manual



VWR Temperature Hygrometer Calibration Procedure and Data Sheet

Frequency: Every Two Years

Step 1: Locate NIST traceable standard.

Step 2: Place unit to be calibrated, tracking No. OMNI- 00592 , inside OMNI desiccate box on the same shelf with the NIST traceable standard.

Step 3: After a period of not less than four hours record the temperature and humidity of both units in the spaces provide below.

Step 4: If the unit to be calibrated matches the NIST standard within ± 4%, it is acceptable. If not, the unit needs to be sent to a repair company or replaced.

Verification Data:

Date: 1/8/2018 Technician: B Davis

Time in desiccate: 0910 Recording time: 1335

NIST Standard Temperature: 28.3 °F NIST Standard Humidity: 74.5

Test Unit Temperature Reading: 25.4 °F Test Unit Humidity Reading: 74.3

Test unit OMNI- 00592 is X or was not __ within acceptable limits.

Technician Signature: B Davis

Comments: Full scale of OMNI-00592 is 90% RH, with a difference of 2.9 this gives a error percentage of 3.22 %. This value is within the allowable 4%.

VWR Temperature Hygrometer Calibration Procedure and Data Sheet

Frequency: Every Two Years

Step 1: Locate NIST traceable standard.

Step 2: Place unit to be calibrated, tracking No. OMNI- 00592, inside OMNI desiccate box on the same shelf with the NIST traceable standard.

Step 3: After a period of not less than four hours record the temperature and humidity of both units in the spaces provide below.

Step 4: If the unit to be calibrated matches the NIST standard within ± 4%, it is acceptable. If not, the unit needs to be sent to a repair company or replaced.

Verification Data:

Date: 1/5/17 Technician: B Davis

Time in desiccate: 0900 Recording time: 0845 1/6/17

NIST Standard Temperature: 67.5 °F NIST Standard Humidity: 9.5

Test Unit Temperature Reading: 66.9 °F Test Unit Humidity Reading: 6.1

Test unit OMNI- 00592 is X or was not ___ within acceptable limits.

Technician Signature:

Comments: Humidity Results of 00592 are within ± 4% of Reference meter

Certificate of Calibration

Certificate Number: **659360**

JJ Calibrations, Inc.
7007 SE Lake Rd
Portland, OR 97267-2105
Phone 503.786.3005
FAX 503.786.2994

0723.01
Calibration

Omni-Test Laboratories
13327 NE Airport Way
Portland, OR 97230

PO: **170149**
Order Date: **09/22/2017**
Authorized By: **N/A**

Property #: **OMNI-00410**
User: **N/A**
Department: **N/A**
Make: **Dwyer**
Model: **1430**
Serial #: **OMNI-00410**
Description: **Microtector**
Procedure: **SEND TO VENDOR**
Accuracy: **±0.00025" WC**

Calibrated on: **10/11/2017**
*Recommended Due: **10/11/2018**
Environment: **19 °C 52 % RH**
* As Received: **Limited**
* As Returned: **Limited**
Action Taken: **Calibrated**
Technician: **34**

Remarks: * Many factors may cause the unit to drift out of calibration before the recommended due date. Any reported error is the absolute value between the reference and the unit. Uncertainties include the effects of the unit.

Limited Calibration (est.2016) - Calibrated micrometer head only.

Standards Used

Std ID	Manufacturer	Model	Nomenclature	Due Date	Trace ID
541A	Select	E8FED2	8 Piece Gage Block Set	12/14/2017	635720
103A	Brown & Sharpe	598-81-14	Gage Block Set, 81 pc.	03/16/2019	643452
368A	Rutland	2225-7081	81 Piece Gage Block Set	06/01/2018	649394

Measurement Data

Parameter / Measurement Description	Range	Unit	Reference	Min	Max	ᵏError	UUT	Uncertainty
Before/After								Accredited = ✓
Length								
		Inch	0.1300	0.129	0.131	0.000	0.130 Inch	1.1E-03 ✓
		Inch	0.3850	0.384	0.386	0.000	0.385 Inch	1.1E-03 ✓
		Inch	0.6150	0.614	0.616	0.000	0.615 Inch	1.1E-03 ✓
		Inch	0.8700	0.869	0.871	0.000	0.870 Inch	1.1E-03 ✓
		Inch	1.0000	0.999	1.001	0.000	1.000 Inch	1.1E-03 ✓

JJ Calibrations, Inc. certifies that this instrument has been calibrated in accordance with the JJ Calibrations Quality Assurance Manual with the stated procedure using standards that are traceable to the National Institute of Standards and Technology (NIST), or other National Measurement Institutes (NMI's), or by using natural physical constants, intrinsic standards or ratio calibration techniques. The quality system and this certificate are in compliance with ANSI/NCSL Z540-1-1994, ISO/IEC 17025-2005, ISO 10012-1, the ISO 9000 family and QS 9000. The expanded uncertainties of measurements for this calibration are based upon 95% (2 sigma) confidence limits. Unless otherwise stated, a test accuracy ratio (TAR) of 4:1, if achievable, is maintained. The results reported herein apply only to the calibration of the item described above. This report may not be reproduced, except in full, without prior written consent of JJ Calibrations, Inc.
JJ Calibrations, Inc. quality system has been assessed and accredited to ISO/IEC 17025:2005.

Reviewer

3 Issued 10/13/2017 Rev # 15

Inspector

ZRE NDIR/O_2



USER'S MANUAL

1312 West Grove Avenue
Orange, CA 92865-4134
Phone: 714-974-5560 Fax: 714-921-2531
www.gasanalyzers.com

NIST Stopwatch Calibration, Time Proficiency Testing Procedure and Data Sheet

Date: 8/7/17 User/Technician: N. Sodergren ☑ Pass ☐ Fail

NIST traceable stopwatch *OMNI* tracking number: 00565 Last Cal: 06/27/2017

Stopwatch to be tested for time proficiency *OMNI* tracking number: 00567

1. Start the NIST traceable stopwatch: at a predetermined time (i.e. 1.00 minutes), the technician shall start the watch being tested. When 15.00 seconds have passed (i.e. the NIST traceable stopwatch reads 1 minute, 15 seconds), the technician shall stop the watch being tested. Record the target time interval (i.e. 15.00 seconds). Repeat this step twice and record the data.

2. Repeat step #1 for each of the following target time intervals: 30.00 seconds, 10.00 minutes, and 30 minutes.

3. If the delta between the target time and measured time is less than 5% of the target time interval or 2.00 seconds (whichever is less), then the technician has demonstrated proficiency with the specific instrument utilized in the proficiency test. The proficiency is valid for a period of 12 months.

4. Archive the proficiency test data and information, including the effective date and expiration date of the proficiency, in the equipment record for the instrument involved.

Target time: 15.00 seconds	#1 Measured time:	15.05	#2 Measured time:	14.96	#3 Measured time:	15.00
Target time: 30.00 seconds	#1 Measured time:	30.19	#2 Measured time:	30.18	#3 Measured time:	29.84
Target time: 45.00 seconds	#1 Measured time:	44.98	#2 Measured time:	44.79	#3 Measured time:	44.89
Target time: 60.00 seconds	#1 Measured time:	59.97	#2 Measured time:	59.94	#3 Measured time:	59.97
Target time: 10.00 minutes	#1 Measured time:	9'59"78	#2 Measured time:	9'59"90	#3 Measured time:	10'00"15
Target time: 30.00 minutes	#1 Measured time:	~~9'59"90~~ 30'00"23	#2 Measured time:	30'00"06	#3 Measured time:	29'59"97

The uncertainty of measurement is ±1 sec. This is based on the reference standard having a TAR (Test Accuracy Ratio) of at least 4:1.

This calibration procedure is confirmed by the manufacturer as a proper method for evaluating the accuracy of timers.

Technician Signature: _____ Date: 8/7/17

Reviewed by: _____ Date: 8/7/17

WOOD MOISTURE CONTENT CALIBRATION WORKSHEET

Moisture Content Standard OMNI ID #: 00431

Reference Moisture Content Standard: **OMNI # 00430**

Date	Temp.	Barometric Pressure	Fixed Moisture %	Fixed Moisture %	Observed Moisture %		Initials
11/14/16	68° F	30.10 in Hg	22%	12%	22%	12%	AG2
5/10/17	70°F	30.14 in Hg	22%	12%	22%	12%	ASC
11/17/17	70°F	30.23 in Hg	22%	12%	22%	12%	MHS
			22%	12%			
			22%	12%			
			22%	12%			
			22%	12%			
			22%	12%			
			22%	12%			
			22%	12%			
			22%	12%			
			22%	12%			
			22%	12%			
			22%	12%			
			22%	12%			
			22%	12%			
			22%	12%			
			22%	12%			
			22%	12%			

Notes: _____

Technician signature: _____ Date: 11/15/16

CALIBRATION RECORD

VANEOMETER AIR VELOCITY METER OMNI #00265

CALIBRATIONS SERVICE RECORD			
DATE	**BY**	**RESULTS**	**DATE OF NEXT CALIBRATION**
10/5/10	[illegible]	INSTALLED NEW VANE FR. FACTORY	4/5/11
4/6/11	[illegible]	" " " " "	10/6/11
7/21/15	[illegible]	Installed new vane from manufacturer	1/21/16
3/4/16	[illegible]	Installed new VANE from MANUfacturer	9/4/16
8/30/16	[illegible]	Installed new VANE from MANUfacturer	~~3/[illegible]/16~~ 3/7/17
3/9/17	[illegible]	Installed new VANE from MANUfacturer	9/9/17
9/13/17	[illegible]	Installed new VANE from MANUfacturer	3/13/18

Example Calculations

Equations and Sample Calculations – ASTM E2780 & E2515

Manufacturer:	Hearth & Home
Model:	Intrepiod IV Catalytic
Run:	2
Category:	1

Equations used to calculate the parameters listed below are described in this appendix. Sample calculations are provided for each equation. The raw data and printout results from a sample run are also provided for comparison to the sample calculations.

M_{Sdb} – Weight of test fuel spacers, dry basis, kg

M_{Cdb}– Weight of test fuel crib, excluding nails and spacers, dry basis, kg

D_{Cdb} - Density of fuel crib, excluding spacers and nails, dry basis, lbs/ft^3

M_{FTAdb} - Total weight of fuel crib excluding nails, dry basis, kg

BR – Dry burn rate, kg/hr

V_s – Average gas velocity in the dilution tunnel, ft/sec

Q_{sd} – Average gas flow rate in dilution tunnel, dscf/hr

$V_{m(std)}$ – Volume of gas sampled, corrected to dry standard conditions, dscf

m_n – Total particulate matter collected, mg

C_s - Concentration of particulate matter in tunnel gas, dry basis, corrected to standard conditions, g/dscf

E_T – Total particulate emissions, g

PR - Proportional rate variation

PM_R – Particulate emissions for test run, g/hr

PM_F – Particulate emission factor for test run, g/dry kg of fuel burned

M_{Sdb} – Weight of test fuel spacers, dry basis, kg
ASTM E2780 equation (1)

$$M_{Sdb} = (M_{Swb})(100/(100 + FM_S))$$

Where,

FM_S = average fuel moisture of test fuel spacers, % dry basis

M_{Swb} = weight of test fuel spacers, wet basis, kg

Sample Calculation:

FM_S = 16.4 %

M_{Swb} = 2.2 lbs

0.4536 = Conversion factor from lbs to kg

M_{Sdb} = [(2.2 x 0.4536) (100/(100 + 16.4)

M_{Sdb} = **0.86** kg

M_{Cdb}– Weight of test fuel crib, excluding nails and spacers, dry basis, kg
ASTM E2780 equation (2)

$$M_{Cdb} = \Sigma[(M_{CPnwb})(100/(100 + FM_{CPn}))]$$

Where,

M_{CPnwb} = weight of each test fuel piece n in fuel crib, excluding nails and spacers, wet basis, kg

FM_{CPn} = Average fuel moisture of test fuel n in fuel crib, % dry basis

Sample Calculation (test fuel piece 1):

MC_{Pnwb} = 1.4

FM_{CPn} = 20.6

= 1.4 (100/(100+ 20.6)

= 1.2 lbs

Total crib weight, excluding spacer 5.24 lbs

M_{Cdb} = **2.38** kg

D_{Cdb} - Density of fuel crib, excluding spacers and nails, dry basis, lbs/ft^3
ASTM E2780 equation (3)

$$D_{Cdb} = M_{Cdb}/V_C$$

Where,

V_C = Volume of fuel crib, ft^3

Sample calculation:

V_C = 354 in^3

1728 = conversion from in^3 to ft^3

D_{Cdb} = 5.24 / 354 * 1728

= **25.6** lbs/ft^3

M_{FTAdb} - Total weight of fuel crib excluding nails, dry basis, kg
ASTM E2780 equation (4)

$$M_{FTAdb} = M_{Sdb} + M_{Cdb}$$

Sample calculation:

$$M_{FTAdb} = 0.86 + 2.38$$

$$= \mathbf{3.23} \text{ kg}$$

BR – dry burn rate, kg/hr
ASTM E2780 equation (5)

$$BR = \frac{60\ M_{FTAdb}}{\theta}$$

Where,

θ = Total length of test run, min

Sample Calculation:

M_{Bdb} = 3.23 kg

θ = 266 min

$$BR = \frac{60 \times 3.23}{266}$$

BR = **0.73** kg/hr

V_s – Average gas velocity in the dilution tunnel, ft/sec
ASTM E2515 equations (9)

$$v_s = F_P \times k_p \times C_p \times (\sqrt{\Delta P})_{avg} \times \sqrt{\frac{T_{s(avg)}}{P_s \times M_s}}$$

Where:

F_p = Adjustment factor for center of tunnel pitot tube placement, $Fp = \frac{V_{strav}}{V_{scent}}$, ASTM E2515 Equation (1)

v_{scent} = Dilution tunnel velocity calculated after the multi-point pitot traverse at the center, ft/sec

v_{strav} = Dilution tunnel velocity calculated after the multi-point pitot traverse, ft/sec

k_p = Pitot tube constant, 85.49

C_p = Pitot tube coefficient: 0.99, unitless

ΔP* = Velocity pressure in the dilution tunnel, in H_2O

T_s = Absolute average gas temperature in the dilution tunnel, °R; (°R = °F + 460)

P_s = Absolute average gas static pressure in dilution tunnel, = $P_{bar} + P_g$, in Hg

P_{bar} = Barometric pressure at test site, in. Hg

P_g = Static pressure of tunnel, in. H_20; (in Hg = in H_20/13.6)

M_s = **The dilution tunnel wet molecular weight; M_s = 28.78 assuming a dry weight of 29 lb/lb-mole

Sample calculation:

$$Fp = \frac{13.24}{15.06} = 0.879$$

$$V_s = 0.879 \times 85.49 \times 0.99 \times 0.224 \times \left(\frac{85.3 + 460}{\left(30.08 + \frac{-0.18}{13.6} \right) \times 28.78} \right)^{1/2}$$

V_s = **13.21** ft/s

*The ASTM test standard mistakenly has the square root of the average delta p instead of the average of the square root of delta p. The current EPA Method 2 is also incorrect. This was verified by Mike Toney at EPA.

**The ASTM test standard mistakenly identifies Ms as the dry molecular weight. It should be the wet molecular weight as indicated in EPA Method 2.

Q_{sd} – Average gas flow rate in dilution tunnel, dscf/hr
ASTM E2515 equation (3)

$$Q_{sd} = 3600 \times (1 - B_{ws}) \times v_s \times A \times \frac{T_{std}}{T_{s(avg)}} \times \frac{P_s}{P_{std}}$$

Where:

3600	=	Conversion from seconds to hours (ASTM method uses 60 to convert in minutes)
B_{ws}	=	Water vapor in gas stream, proportion by volume; assume 2%
A	=	Cross sectional area of dilution tunnel, ft^2
T_{std}	=	Standard absolute temperature, 528 °R
P_s	=	Absolute average gas static pressure in dilution tunnel, = P_{bar} + P_g , in Hg
$T_{s(avg)}$	=	Absolute average gas temperature in the dilution tunnel, °R; (°R = °F + 460)
P_{std}	=	Standard absolute pressure, 29.92 in Hg

Sample calculation:

$$Q_{sd} = 3600 \times (1 - 0.02) \times 13.21 \times 0.196 \times \frac{528}{85.3 + 460} \times \frac{30.1 + \frac{-0.18}{13.6}}{29.92}$$

Q_{sd} = **8902.0** dscf/hr

$V_{m(std)}$ – Volume of Gas Sampled Corrected to Dry Standard Conditions, dscf
ASTM E2515 equation (6)

$$V_{m(std)} = K_1 \, V_m \, Y \frac{P_{bar} + \left(\frac{\Delta H}{13.6}\right)}{T_m}$$

Where:

K_1	=	17.64 °R/in. Hg
V_m	=	Volume of gas sample measured at the dry gas meter, dcf
Y	=	Dry gas meter calibration factor, dimensionless
P_{bar}	=	Barometric pressure at the testing site, in. Hg
ΔH	=	Average pressure differential across the orifice meter, in. H_2O
T_m	=	Absolute average dry gas meter temperature, °R

Sample Calculation:

Using equation for Train 1:

$$V_{m(std)} = 17.64 \times 43.854 \times 0.981 \times \frac{\left(30.08 + \frac{1.35}{13.6}\right)}{(81.3 + 460)}$$

$V_{m(std)}$ = **42.309** dscf

Using equation for Train 2:

$$V_{m(std)} = 17.64 \times 43.627 \times 0.984 \times \frac{\left(30.08 + \frac{1.14}{13.6}\right)}{(81.6 + 460)}$$

$V_{m(std)}$ = **42.176** dscf

Using equation for ambient train:

$$V_{m(std)} = 17.64 \times 0.00 \times 0 \times \frac{\left(\underline{30.08} + \frac{0.00}{13.6}\right)}{(71.2 + 460)}$$

$V_{m(std)}$ = **0** dscf

m_n – Total Particulate Matter Collected, mg
ASTM E2515 Equation (12)

$$m_n = m_p + m_f + m_g$$

Where:

m_p = mass of particulate matter from probe, mg

m_f = mass of particulate matter from filters, mg

m_g = mass of particulate matter from filter seals, mg

Sample Calculation:

Using equation for Train 1 (first hour):

m_n = 0.0 + 0.5 + 0.0

m_n = 0.5 mg

Using equation for Train 1 (post-first hour):

m_n = 0.0 + 0.0 + 0.4

m_n = 0.4 mg

Train 1 aggregate:

m_n = 0.5 + 0.4

m_n = **0.9** mg

Using equation for Train 2:

m_n = 0 + 0.7 + 0.3

m_n = **1** mg

C_s - Concentration of particulate matter in tunnel gas, dry basis, corrected to standard conditions, g/dsc
ASTM E2515 equation (13)

$$C_s = K_2 \times \frac{m_n}{V_{m(std)}}$$

Where:

K_2	=	Constant, 0.001 g/mg
m_n	=	Total mass of particulate matter collected in the sampling train, mg
$V_{m(std)}$	=	Volume of gas sampled corrected to dry standard conditions, dscf

Sample calculation:

For Train 1:

$$C_s = 0.001 \times \frac{0.9}{42.31}$$

C_s = **0.00002** g/dscf

For Train 2

$$C_s = 0.001 \times \frac{1.0}{42.18}$$

C_s = **0.00002** g/dscf

For Ambient Train

$$C_r = 0.001 \times \frac{0.0}{0}$$

C_r = **0** g/dscf

E_T – Total Particulate Emissions, g
ASTM E2515 equation (15)

$$E_T = (c_s - c_r) \times Q_{std} \times \theta$$

Where:

C_s	=	Concentration of particulate matter in tunnel gas, g/dscf
C_r	=	Concentration particulate matter room air, g/dscf
Q_{std}	=	Average dilution tunnel gas flow rate, dscf/hr
θ	=	Total time of test run, minutes

Sample calculation:

For Train 1

E_T = (0.000021 - 0) x 8902.0 x 266 /60

E_T = 0.84 g

For Train 2

E_T = (0.000024 - 0) x 8902.0 x 266 /60

E_T = 0.94 g

Average

E = 0.89 g

Total emission values shall not differ by more than 7.5% from the total average emissions

7.5% of the average =	0.07
Train 1 difference =	0.05
Train 2 difference =	0.05

PR - Proportional Rate Variation
ASTM E2515 equation (16)

$$PR = \left[\frac{\theta \times V_{mi} \times V_s \times T_m \times T_{si}}{\theta_i \times V_m \times V_{si} \times T_{mi} \times T_s} \right] \times 100$$

Where:

θ = Total sampling time, min

θ_i = Length of recording interval, min

V_{mi} = Volume of gas sample measured by the dry gas meter during the “ith” time interval, dcf

V_m = Volume of gas sample as measured by dry gas meter, dcf

V_{si} = Average gas velocity in the dilution tunnel during the "ith" time interval, ft/sec

V_s = Average gas velocity in the dilution tunnel, ft/sec

T_{mi} = Absolute average dry gas meter temperature during the "ith" time interval, ^oR

T_m = Absolute average dry gas meter temperature, ^oR

T_{si} = Absolute average gas temperature in the dilution tunnel during the "ith" time interval, ^oR

T_s = Absolute average gas temperature in the dilution tunnel, ^oR

Sample calculation (for the first 1 minute interval of Train 1):

$$PR = \left(\frac{266 \times 0.156 \times 13.21 \times (125.0 + 460) \times (81.3 + 460)}{1 \times 43.85 \times 13.68 \times (85.3 + 460) \times (75.0 + 460)} \right) \times 100$$

PR = 99 %

PM_R – Particulate emissions for test run, g/hr
ASTM E2780 equation (6)

$$PM_R = 60 (E_T/\theta)$$

Where,

E_T = Total particulate emissions, grams

θ = Total length of full integrated test run, min

Sample Calculation:

E_T (Dual train average) = 0.89 g

θ = 266 min

$PM_R = 60 \times (0.89 / 266)$

PM_R = **0.20** g/hr

PM_F – Particulate emission factor for test run, g/dry kg of fuel burned
ASTM E2780 equation (7)

$$PM_F = E_T/M_{FTAdb}$$

Sample Calculation:

E_T (Dual train average) = 0.89 g

M_{Bdb} = 3.23 kg

PM_F = 0.89 / 3.23

PM_F = **0.27** g/kg

APPENDIX A

Labeling & Owner's Manual

Tested & Listed By OTL Portland Oregon USA C US OMNI-Test Laboratories, Inc.

MODEL / MODÈLE: "Intrepid FlexBurn® 2115/2115-CAT"
LISTED SOLID FUEL ROOM HEATER BURNING FIREPLACE STOVE
HOMOLOGUE POELE A COMBUSTIBLE SOLIDES

Serial No.
Nº de série: HF

BARCODE LABEL

Report #/Rapport #0135WS038E
Tested to / Testé à: UL 1482-2011, UL 737-2007, ULC-S627-00, EPA 28R ASTM E2780
THIS STOVE MEETS UL 737, STANDARD FOR FIREPLACE STOVES, WHEN FIRESCREEN IS PROVIDED. **APPROVED FOR USE IN MOBILE HOMES IN THE U.S. AND CANADA.**
Install and use only in accordance with manufacturer's installation and operation instructions. Contact local building or fire officials about restrictions and installation inspection in your area. Install only with legs provided in accordance with installation instructions.
WARNING: Risk of flame and smoke spillage. Do not obstruct the space beneath the heater.
Fuel: Use with solid wood fuel only. Do not burn other fuels.
Build a fire directly on hearth only. Do not elevate fire. Keep doors fully closed or fully open while operating.
Chimney: Use a minimum 6" diameter factory built high temperature (H.T.) chimney which is listed to UL-103-1985 (2100°F) or 8" X 8" nominal or larger approved masonry chimney with flue liner.
Do not connect this unit to a chimney flue serving another appliance.
Chimney Connector: Use a minimum 6" diameter 24 gauge chimney connector. Install chimney connector at least 18" from ceiling. Refer to local building codes and Vermont Castings Owner's Guide for precautions for passing a chimney or chimney connector through a combustible wall or ceiling.
Floor Protection U.S.: With the Vermont Castings Bottom Heat Shield installed most installations require an approved hearth pad. The Encore 2040 was test using a 1/2" (13mm) non-combustible hearth material with a thermal conductivity, (k) = 0.47 BTU-in/hr ft²-°F, resulting in the requirement of providing total thermal resistance (R) of 1.06. (Cover with material if desired). The floor protector is required under the stove and must extend 16" from the front, 6" from the rear and sides. It must extend under the chimney connector and 2" to either side. Without Vermont Castings Bottom Heat Shield, only installations over a totally non-combustible floor such as unpainted concrete over earth are acceptable. UL 737 Doors open require 1" floor protection.
Floor Protection Canada: Operate only with Vermont Castings Bottom Heat Shield in place. When installed on a combustible floor, the Encore 2040 was tested using a 1/2" (13mm) non-combustible hearth material with a thermal conductivity, (k) = 0.47 BTU-in/hr ft²-°F, resulting in the requirement of providing total thermal resistance (R) of 1.06. (Cover with decorative non-combustible material if desired).The floor protection must extend 450mm (18in.) to the front and 200mm (8in.) to the front and 200mm (8in.) to the sides and rear. Do not obstruct the space under the heater.
Optional Components: Spark screen Part No. 0127 (only for use with 8" diameter connector and chimney), Flue Collar/8" oval Part No. 0555, Mobile Home Kit-0336, Fan Kit Part No. FK26. 115V 60Hz 1.1 FLA
Replace glass only with Vermont Castings 5mm ceramic glass.
Do not remove or cover this label. **Catalytic Combustor Part No. 30005353**
CAUTION: Burning of materials other than the specified fuels may make the Catalyst in the combustor inactive. The combustor is fragile, handle carefully. The performance of the catalytic device or it's durability have not been evaluated as part of the certification.

Combustion air cannot be obstructed.
Damper must be open before opening doors.
Do not overfire. Glowing parts indicate overfiring.
The space heater must be installed with the legs provided, attached as shown in the installation instructions.

Installer conformément aux instructions du fabricant. Contacter les autorités locates pour connaître les restrictions et inspections nécessaires. N'installer que les pattes qui sont incluses, en conformité avec les instructions du fabricant.
Ne pas obstruer l'espace sous le poele.
Attention: Risque de flammes et de fumée spilage. Ne pas obstruer l'espace sous le chauffe-eau.
Le registre doit être ouvert avant d'ouvrir les portes.
Combustible: N'utiliser que du bois comme combustible. Ne pas utiliser d'autres types de combustible. Inspecter et nettoyer la cheminée fréquemment - Sous certainesusages, l'accumulation de créosote peu se produire rapidement. Garder les portes toutes fermées ou toutes ouvertes durant l'opération.
Faire le feu directement sur la grille prévue à cet effet. Laisser les portes du poêle soit complètement ouverts ou complètement fermées lors de l'utilisation. Ne pasraccorder le conduit de cheminée du poêle à une cheminée servant à d'autres appareils. N'utiliser que les vitres de céramique Vermont Castings en cas de remplacement de celles-ci.
Protection plancher Canada: fonctionner uniquement avec Vermont Castings écran thermique inférieur en place. Lorsqu'il est installé sur un plancher combustible, le Encore 2010 a été testé en utilisant un 1/2 "(13mm) de matériau de âtre non-combustible avec une conductivité, (k) = 0,47 BTU-in / hr ft²- °F, ce qui entraîne l'obligation de providinga résistance thermique totale (R) de 1,06. (Couvrir avec un matériau non-combustible décorative si désiré) .La protection de plancher doit se prolonger 450mm (18po.) À l'avant et 200 mm (8 po.) À l'avant et 200 mm (8 po.) Sur les côtés et à l'arrière. Ne pas obstruer l'espace sous le poêle.
Accessories disponibles au Canada: écran pare feu 1907 (n'utiliser qu'avac un conduit d'evacuation et une chiminée de 6" de diametre), ventilateur FK26.
Catalyseur pièce no. 30005353
Replacer uniquement qu'avec une glace 5mm Vermont Castings.
Attention: Bruler des matières autres que celles spécifiées pourrait rendre le caralyseur inactif.
Attention: Le catalyseur est fragile, manipulaer avec soin.

Date of Manufacture / Date de fabrication:

2018	2019	2020	JAN	FEB	MAR	APR	MAY	JUN	JUL	AUG	SEP	OCT	NOV	DEC
■	■	■	■	■	■	■	■	■	■	■	■	■	■	■

Manufactured by / Fabriqué par: Hearth and Home Technologies 352 Mountain House Road, Halifax PA 17032

VERMONT CASTINGS

Made in U.S.A. of US and imported parts. / Fabriqué aux États-Unis-d'Amérique par des pièces d'origine américaine et pièces importées.

US ENVIRONMENTAL PROTECTION AGENCY
Certified to comply with 2020, particulate emissions standards at .6g/hr (without catalyst) and .3 g/hr (catalytic). This wood heater needs periodic inspection and repalcement for proper operation. Consult the Owner's Manual for further information. It is against Federal Regulations to operate this wood heater in a manner inconsistent with operating instructions in the Owner's Manual.

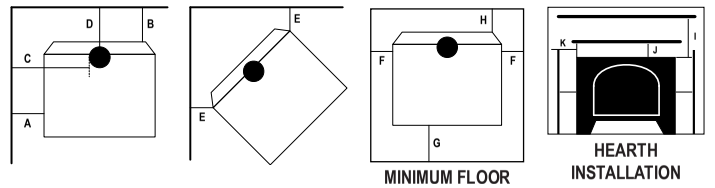

MINIMUM FLOOR PROTECTION
HEARTH INSTALLATION

*Less than 3/4" (19mm) protrusion. For additional types of installations and clearabces consult your Owner's Manual. Por autres modes d'installation et degagement supplementaires, consultz votres manual du proprietaire.
Most vertical installations require a ceiling heat shield and a flue collar heat shield to be installed. Consult your Owner's Manual.

MINIMUM CLEARANCES TO COMBUSTIBLE CONSTRUCTION / MINIMUM DE DEGAGEMENT JUSQU'A LA CONSTRUCTION COMBUSTIBLE

A = Unit to Sidewall	19"
B = Unit to Backwall	20"
C = Chimney Connector to Sidewall	29"
D = Chimney Connector to Backwall	21"
E = Unit to Adjacent Wall	18-1/2"
F = Sides (Floor Protection)	6"
G = Front to Glass (Floor Protection)	16"
H = Rear (Floor Protection)	6"
I = Top to Bottom of Mantel	22"
J = Top to Bottom of Top Trim*	28"
K = Edge of Top to Side Wall	21"

A = Entre le mur lateral et l'appareil	483mm
B = Entre le mur arriereet l'appareil	508mm
C = Entre le tuyau et le mur lateral	737mm
D = Entre le tuyau et le mur arriere	534mm
E = Entre le mur adjacent et l'appareil	470mm
F = Côtes (la protection de plancher)	203mm
G = Devant, par rapport au verr	457mm
H = Arrière (la protection de plancher)	203mm
I = De haut en bas de Mantel	556mm
J = De haut en bas de la moulure supérieure*	712mm
K = Edge of Haut de paroi latérale	534mm

CAUTION: HOT WHILE IN OPERATION- DO NOT TOUCH- KEEP CHILDRENAND CLOTHING AWAY- CONTACT MAY CAUSE SKIN BURNS- SEE NAMEPLATE AND INSTRUCTIONS. KEEP FURNISHINGS AND OTHER COMBUSTIBLE MATERIALS A CONSIDERABLE DISTANCE AWAY FROM THE APPLIANCE

ATTENTION: CHAUD LORS DU FONCTIONNEMENT- NE TOUCHEZ PAS L'APPAREIL-GARDEZ LES ENFANTS ET LES VÊTEMENTS ÉLOIGNÉS- TOUT CONTACT PEUT ENTRAÎNER DES BRÛLURES DE LA PEAU. RÉFÉREZ-VOUS À LA PLAQUE SIGNALÉTIQUE ET AU MODE D'EMPLOI. GARDEZ LE MOBILIER ET LES AUTRES MATÉRIAUX COMBUSTIBLES BIEN À L'ÉCART DE L'APPAREIL.

3-90-30007343_R1

LABEL TICKET			
ECO:		**LABEL SIZE:**	6.5" H x 13.5" W
PART # / REV:	30007343_R1	**ADHESIVE:**	
ORIGINATOR:	Spidlet	**MATERIAL:**	24 Gauge Aluminum
DATE:	01/18	**INK:**	Black Background Aluminum Lettering
VERMONT CASTINGS 352 Mountain House Road Halifax, PA 17032		(4) Slotted Holes = .156 x .25 (1) Round Hole = .630 (1) Round Hole = .140 (4) Corners = R.062 Barcode label must have the serial number on it. The barcode label must be able to read Code 39 Full ASCII.	

Owner's Manual
Operation & Care

INSTALLER: Leave this manual with party responsible for use and operation.
OWNER: Retain this manual for future reference.

Contact your dealer with questions on installation, operation, or service.

NOTICE: SAVE THESE INSTRUCTIONS

VERMONT CASTINGS

Intrepid FlexBurn® Wood Burning Stove
Model 2115 / 2115-CAT

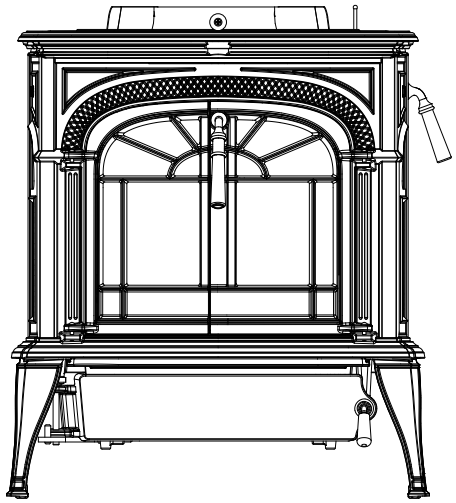

Installation and service of this appliance should be performed by qualified personnel. Hearth & Home Technologies recommends HHT Factory Trained or NFI certified professionals.

hearthED FACTORY TRAINING Fuel Your Fire

NFI NATIONAL FIREPLACE INSTITUTE® A CERTIFICATION AGENCY

NOTE

To obtain a French translation of this manual, please contact your dealer or visit www.vermontcastings.com

Pour obtenir une traduction française de ce manuel, s'il vous plaît contacter votre revendeur ou visitez www.vermontcastings.com

⚠ WARNING



If the information in these instructions is not followed exactly, a fire may result causing property damage, personal injury, or death.

- Do not store or use gasoline or other flammable vapors and liquids in the vicinity of this or any other appliance.
- Do not over fire - If appliance or chimney connector glows, you are over firing. Over firing will void your warranty.
- Comply with all minimum clearances to combustibles as specified. Failure to comply may cause house fire.

⚠ WARNING



HOT SURFACES!
Glass and other surfaces are hot during operation AND cool down.
Hot glass will cause burns.

- Do not touch glass until it is cooled
- NEVER allow children to touch glass
- Keep children away
- CAREFULLY SUPERVISE children in same room as fireplace.
- Alert children and adults to hazards of high temperatures
- **High temperatures may ignite clothing or other flammable materials.**
- Keep clothing, furniture, draperies and other flammable materials away.

Congratulations on your choice of a Vermont Castings Intrepid FlexBurn® Wood Stove. At Vermont Castings we take American craftsmanship seriously. We assure you that your cast-iron Vermont Castings stove has been made with the utmost care and will provide you with many years of service.

As you become acquainted with your new stove, you will find that its appearance is matched by its functionality, due to cast iron's unique ability to absorb and radiate heat.

Also, Vermont Castings products are among the cleanest-burning wood stoves available today. However, clean burning depends on both the manufacturer and the operator. Please read this manual carefully to understand how to properly operate and maintain your stove.

At Vermont Castings, we are committed to your satisfaction as a customer. That is why we maintain an exclusive network of the finest dealers in the industry. Our dealers are chosen for their expertise and dedication to customer service. Feel free to contact your Authorized Vermont Castings Dealer anytime you have a particular question about your stove or its performance.

This manual contains valuable instructions on the operation of your Vermont Castings Intrepid FlexBurn® Wood Stove. It also contains useful information on maintenance. Please read the manual thoroughly and keep it as a reference.

Note: Cast iron is an artisan crafted material, which is made the same way today as nearly 2000 years ago. Due to the intrinsic primitive nature of the casting process, part to part variation is normal and adds to the character of a hand built cast iron appliance.

US ENVIRONMENTAL PROTECTION AGENCY

Certified to comply with 2020, particulate emissions standards at .6g/hr (without catalyst) and .3 g/hr (catalytic).

Please read this entire manual before you install and use your new stove. Failure to follow instructions may result in property damage, bodily injury, or even death.

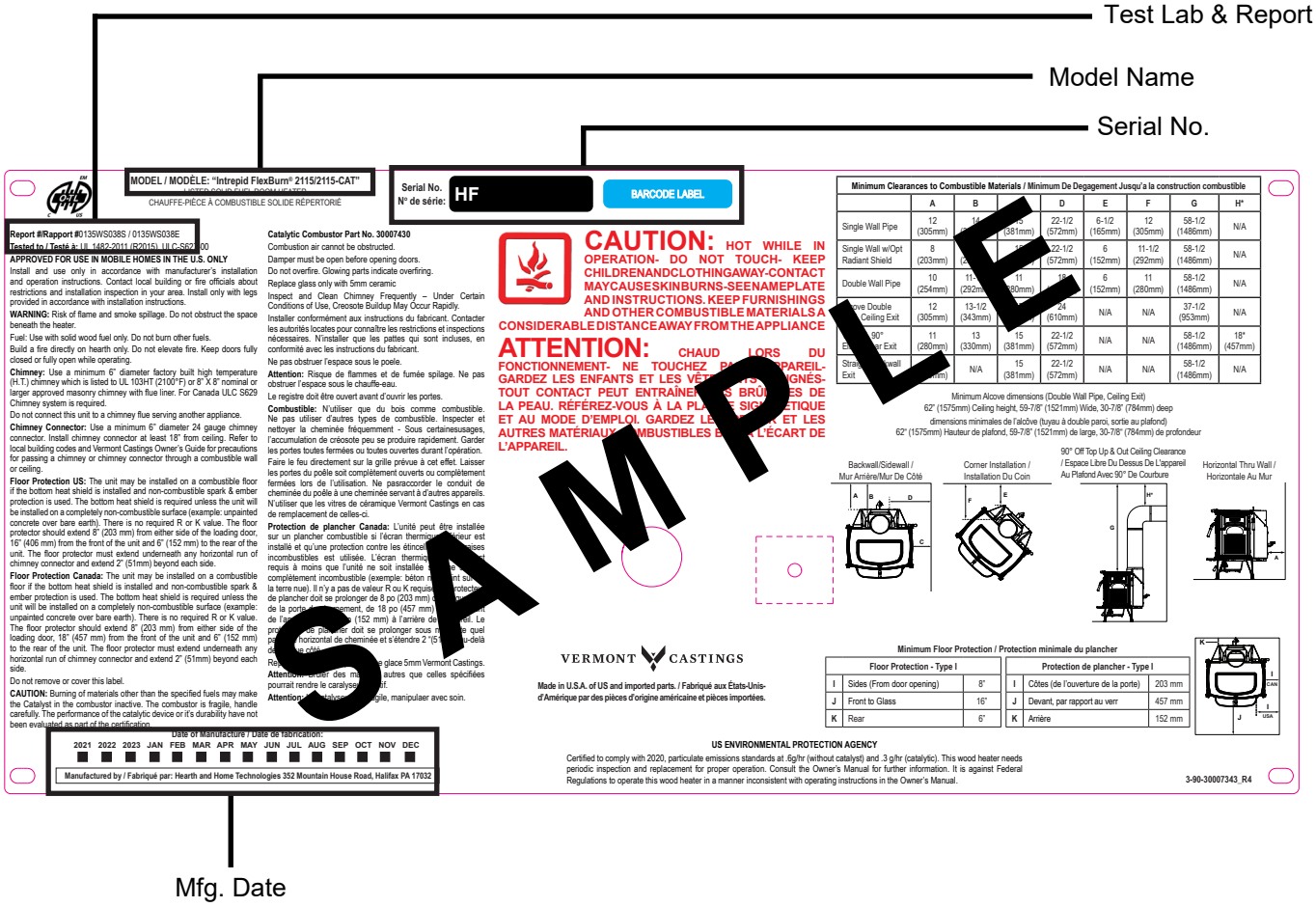

Safety Alert Key:

- ***DANGER!*** Indicates a hazardous situation which, if not avoided will result in death or serious injury.
- ***WARNING!*** Indicates a hazardous situation which, if not avoided could result in death or serious injury.
- ***CAUTION!*** Indicates a hazardous situation which, if not avoided, could result in minor or moderate injury.
- ***NOTICE:*** Indicates practices which may cause damage to the appliance or to property.

TABLE OF CONTENTS

A. Warranty Policy 4

1 Product Specific and Important Safety Information

➔ A. Appliance Certification 6
B. BTU & Efficiency Specifications 6
C. Mobile Home Approved (USA ONLY) 6
D. Glass Specifications 6
E. California Safety Information 6

2 Operating Instructions

A. The Intrepid FlexBurn® Controls 8
B. Conditioning Your Stove 9
C. Ways to Add Fuel 10
D. Ash Disposal 13
E. Opacity (Visible Smoke) 14
F. Negative Pressure 14
G. Important Information 15

3 Maintenance

A. Cleaning and Replacement of the Glass 16
B. Damper Adjustment 17
C. Door Latch Adjustment 17
D. Gasket Replacement 17
E. The Chimney System 18
F. The Catalytic Element 19

4 Troubleshooting Guide 21

5 Reference Material

A. Service & Maintenance Log 22
B. Service Parts List 23
C. Contact Information 28

➔ = Contains updated information

A. Warranty Policy

Hearth & Home Technologies LLC
LIMITED LIFETIME WARRANTY

Hearth & Home Technologies LLC ("HHT") extends the following warranty for HHT gas, wood, pellet and electric hearth appliances (each a "Product" and collectively, the "Product(s)") and certain component parts set forth in the table below ("Component Part(s)") that are purchased from a HHT authorized dealer or distributor.

WARRANTY COVERAGE:

HHT warrants that the Products and their Component Parts will be free from defects in materials and workmanship for the applicable period of Warranty coverage set forth in the table below ("Warranty Period"). If a Product or Component Parts are found to be defective in materials or workmanship during the applicable Warranty Period, HHT will, at its option, repair the applicable Component Part(s), replace the applicable Component Part(s), or refund the purchase price of the applicable Product(s). The maximum amount recoverable under this Warranty is limited to the purchase price of the Product. This Warranty is transferable from the original purchaser to subsequent owners, but the Warranty Period will not be extended in duration or expanded in coverage for any such transfer. This Warranty is subject to conditions, exclusions, and limitations as described below.

WARRANTY PERIOD:

Warranty coverage begins at the date of installation. In the case of new home constructions, Warranty coverage begins on the date of first occupancy of the dwelling or six months after the sale of the Product(s) by an independent, authorized HHT dealer or distributor, whichever occurs earlier. However, the Warranty coverage shall commence no later than 24 months following the date of Product shipment from HHT, regardless of the installation or occupancy date.

The term "Lifetime" in the table below is defined as: 20 years from the beginning date of warranty coverage for gas appliances, and 10 years from the beginning date of warranty coverage for wood and pellet appliances. These time periods reflect the minimum expected useful lives of the designated Component Parts under normal operating conditions.

Warranty Period		**HHT Manufactured Appliances and Venting**					
Component Parts	Labor	Gas	Pellet	Wood	Electric	Venting	Component Parts Covered by this Warranty
1 Year		X	X	X		X	All parts including handles, external enameled components and other material except as covered by Warranty Conditions, Warranty Exclusions, and Warranty Limitations listed
2 Years					X		All parts except as covered by Warranty Conditions, Warranty Exclusions, and Warranty Limitations listed
2 years			X	X			Igniters, Auger Motors, Electronic Components, and Glass
		X					Electrical components limited to modules, remotes/wall switches, valves, pilots, blowers, junction boxes, wire harnesses, transformers and lights (excluding light bulbs)
		X		X			Molded Refractory Panels, Glass Liners
3 years			X				Firepots, burnpots, mechanical feeders/auger assemblies
5 years	1 year	X					Vent Free Burners, Vent Free Logs
			X	X			Castings, Medallions and Baffles
6 years	3 years			X			Catalysts
7 years	3 years		X	X			Manifold tubes, HHT Chimney and Terminations
10 years	1 year	X					Burners, logs and refractory
Limited Lifetime	3 years	X	X	X			Firebox and heat exchanger, FlexBurn® System (engine, inner cover, access cover and fireback)
1 Year	None	X	X	X	X	X	All purchased replacement parts

WARRANTY CONDITIONS:

- Because HHT cannot control the quality of any Products sold by unauthorized sellers, this Warranty only covers Products that are purchased through an HHT authorized dealer or distributor unless otherwise prohibited by law; a list of HHT authorized dealers is available on the HHT branded websites.
- This Warranty is only valid while the applicable Product remains at the site of original installation.
- This Warranty is only valid in the country in which the HHT authorized dealer or distributor that sold the applicable Product is authorized to sell applicable Product.
- Contact your installing distributor or dealer for Warranty service. If the installing dealer or distributor is unable to provide necessary parts, contact the nearest HHT authorized dealer or supplier. Additional service fees may apply if you are seeking Warranty service from a dealer other than the dealer from whom you originally purchased the applicable Product.
- No HHT consumer should bear cost of warranty service or costs incurred while servicing warranty claims (i.e., travel, gas, or mileage) when the service is performed within the terms of this Warranty. Check with your dealer or distributor in advance for any costs to you when arranging a warranty call. Travel and shipping charges for parts are not covered by this Warranty.

WARRANTY EXCLUSIONS:

This Warranty does not cover the following:

- Changes in surface finishes as a result of normal use. As a heating appliance, some changes in color of interior and exterior surface finishes may occur. This is not a flaw and is not covered under the Warranty.
- Damage to printed, plated, or enameled surfaces caused by fingerprints, accidents, misuse, scratches, melted items or other external sources and residues left on the plated surfaces from the use of abrasive cleaners or polishes.
- Repair or replacement of parts that are subject to normal wear and tear during the Warranty Period are not covered. These parts include: paint, wood and pellet gaskets, firebricks, grates, flame guides, batteries and the discoloration of glass.
- Minor expansion, contraction, or movement of certain parts causing noise. These conditions are normal and complaints related to this noise are not covered by this Warranty.
- Damages resulting from: (1) failure to install, operate, or maintain the applicable Product in accordance with the installation instructions, operating instructions, and listing agent identification label furnished with the applicable Product; (2) failure to install the applicable Product in accordance with local building codes; (3) shipping or improper handling; (4) improper operation, abuse, misuse, continued operation with damaged, corroded or failed components, accident, or improperly/incorrectly performed repairs; (5) environmental conditions, inadequate ventilation, negative pressure, or drafting caused by tightly sealed constructions, insufficient make-up air supply, or handling devices such as exhaust fans or forced air furnaces or other such causes; (6) use of fuels other than those specified in the operation instructions; (7) installation or use of components not supplied with the applicable Product or any other components not expressly authorized and approved by HHT; (8) modification of the appliance not expressly authorized and approved by HHT in writing; and/or (9) interruptions or fluctuations of electrical power supply to the applicable Product.
- Non-HHT venting components, hearth connections or other accessories used in conjunction with the applicable Product.
- Any part of a pre-existing fireplace system in which an insert or a decorative gas applicable Product is installed.
- HHT's obligation under this Warranty does not extend to the Product's capability to heat the desired space. Information is provided to assist the consumer and the dealer in selecting the proper Product for the application. Consideration must be given to the Product location and configuration, environmental conditions, insulation and air tightness of the structure.

This warranty is void if:

- The applicable Product has been over-fired, operated in atmospheres contaminated by chlorine, fluorine, or other damaging chemicals. Over-firing can be identified by, but not limited to, warped plates or tubes, deformation/warping of interior cast iron structure or components, rust colored cast iron, bubbling, cracking and discoloration of steel or enamel finishes.
- The applicable Product is subjected to prolonged periods of dampness or condensation.
- There is any damage to the applicable Product due to water or weather damage which is the result of, but not limited to, improper chimney or venting installation.

LIMITATIONS OF REMEDIES AND LIABILITY:

- **EXCEPT TO THE EXTENT PROVIDED BY LAW, HHT MAKES NO EXPRESS WARRANTIES OTHER THAN THE WARRANTY SPECIFIED HEREIN. The owner's exclusive remedy and HHT's sole obligation under this Warranty or in contract, tort or otherwise, shall be limited to replacement of the Component Part(s), repair of the Component Part(s), or refund of the original purchase price of the applicable Product(s), as specified above; provided, however, that (i) if HHT is unable to provide replacement of the Component Part(s) and repair of the Component Part(s) is not commercially practicable or cannot be timely made, or (ii) the customer is willing to accept a refund of the purchase price of the applicable Product(s), HHT may discharge all such obligations by refunding the purchase price of the applicable Product. In no event will HHT be liable for any incidental or consequential damages caused by defects in the applicable Product. Some States do not allow the exclusion or limitation of incidental or consequential damages, so the above limitation or exclusion may not apply to you. This Warranty gives you specific legal rights and you may also have other rights which vary from State to State. THE DURATION OF ANY IMPLIED WARRANTY IS LIMITED TO DURATION OF THE EXPRESSED WARRANTY SPECIFIED ABOVE FOR THE APPLICABLE PRODUCT. Some States do not allow limitations on how long an implied warranty lasts, so the above limitation may not apply to you.**

1 Product Specific and Important Safety Information

A. Appliance Certification

MODEL:	Intrepid FlexBurn® 2115/2115-CAT
LABORATORY:	OMNI Test Laboratories, Inc
REPORT NO.	0135WS038S / 0135WS038E
TYPE:	Solid Fuel Type Room Heaters
➔ **STANDARD(s):**	UL 1482, ULC-S627-00

B. BTU & Efficiency Specifications

EPA Report #:	114-18 (without catalyst) 115-18 (catalytic)
EPA Certified Emissions:	.6 g/hr (without catalyst) .3 g/hr (catalytic)
***LHV Tested Efficiency:**	80.3% (without catalyst) 82.8% (catalytic)
****HHV Tested Efficiency:**	74.3% (without catalyst) 76.7% (catalytic)
*****EPA BTU Output:**	12,500 - 18,500 (without catalyst)
	10,700 - 16,000 (catalytic)
******Peak BTU/Hour Output:**	36,900 (without catalyst) 34,900 (catalytic)
Vent Size:	6 Inch (152 mm)
Firebox Size:	1.31 cu. ft.
Recommended Length:	14”
Max. Wood Length:	15”
Fuel Orientation:	East, West
Fuel	Seasoned Cordwood (20% moisture)
* Weighted average LHV efficiency using Douglas Fir dimensional lumber and data collected during EPA emissions test.	
**Weighted average HHV efficiency using Douglas Fir dimensional lumber and data collected during EPA emissions test.	
***Efficiencies are based on test results calculated using B415; these calculated efficiencies are then used to calculate output BTU’s.	
******A peak BTU out of the appliance calculated using the maximum first hour burn rate from the High EPA Test and the BTU content of cord wood (8600) times the efficiency.	

The Vermont Castings Intrepid FlexBurn® Wood Appliance meets the U.S. Environmental Protection Agency’s crib wood emission limits for wood appliances sold after May 15, 2020.

This wood appliance needs periodic inspection and repair for proper operation. It is against federal regulations to operate this wood appliance in a manner inconsistent with operating instructions in this manual.

C. Mobile Home Approved (USA ONLY)

- This appliance is approved for mobile home installations in the USA when not installed in a sleeping room and when an outside combustion air inlet is provided.
- The structural integrity of the mobile home floor, ceiling, and walls must be maintained.
- The appliance must be properly grounded to the frame of the mobile home with #8 copper ground wire, and chimney must be listed to UL103 HT or a listed UL-1777 full length six inch (152mm) diameter liner must be used.
- Outside air must be provided in a mobile home installation.
- Mobile home bracket kit #0003264 must be installed.

D. Glass Specifications

This appliance is equipped with 5mm ceramic glass. Replace glass only with 5mm ceramic glass. Please contact your dealer for replacement glass.

E. California Safety Information

WARNING

This product and the fuels used to operate this product (wood), and the products of combustion of such fuels, can expose you to chemicals including carbon black, which is known to the State of California to cause cancer, and carbon monoxide, which is know to the State of California to cause birth defects or other reproductive harm. For more information go to: www.P65Warnings.ca.gov

WARNING



Fire Risk.

Hearth & Home Technologies disclaims any responsibility for, and the warranty will be voided by, the following actions:

- Installation and use of any damaged appliance.
- Modification of the appliance.
- Installation other than as instructed by Hearth & Home Technologies.
- Installation and/or use of any component part not approved by Hearth & Home Technologies.
- Operating appliance without fully assembling all components.
- Operating appliance without legs attached (if supplied with appliance).
- Do NOT Overfire - If appliance or chimney connector glows, you are overfiring.

Any such action that may cause a fire hazard.

Improper installation, adjustment, alteration, service or maintenance can cause injury or property damage.

For assistance or additional information, consult a qualified installer, service agency or your dealer.

NOTE: Hearth & Home Technologies, manufacturer of this appliance, reserves the right to alter its products, their specifications and/or price without notice.

Vermont Castings is a registered trademark of Hearth & Home Technologies.

2 Operating Instructions

A. The Intrepid FlexBurn® Controls

Two controls regulate the performance of the Intrepid FlexBurn®: a **primary air control** supplies oxygen for the fire, and a **damper** directs air flow within the stove to activate and deactivate the combustion system. (Figure 2.1)

Symbols on the stove are reminders of the correct directions for using the controls. The words 'Left' and 'right' in these directions are *facing the stove*.

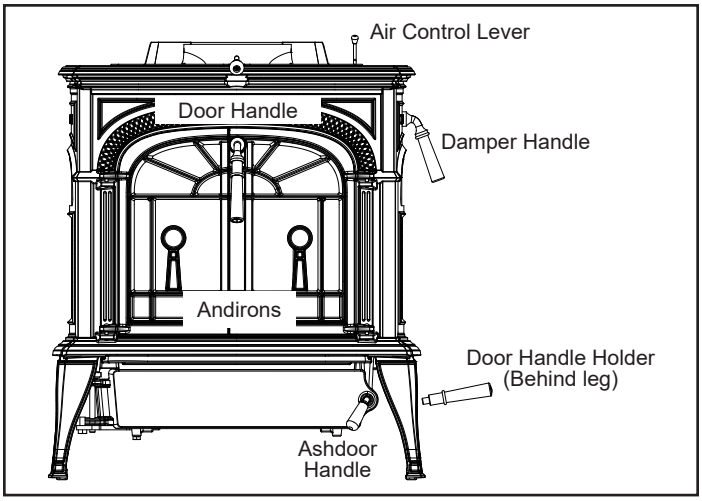

Figure 2.1 - The Intrepid FlexBurn® controls are conveniently located and easy to operate.

A Single Air Control Regulates Heat Output and Burn Time

The **primary air control lever**, on the top-right of the stove, controls the amount of incoming air for starting, maintaining, and reviving a fire.

Once the air control is manually set, a bi-metallic thermostat automatically maintains the heat output at a constant level for a more even heat over the life of the burn.

More air entering the stove makes the fire burn hotter and faster, while less air prolongs the burn at a lower heat output level.

For the greatest air supply and maximum heat output (but the shortest burn time), move the lever toward the flue collar. For a fire that will last longer with less heat, move the lever away from the flue collar. (Figure 2.2)

⚠ WARNING

This wood heater has a manufactured-set minimum low burn rate that must not be altered. It is against federal regulations to alter this setting or otherwise operate this wood heater in a manner inconsistent with operating instructions in this manual.

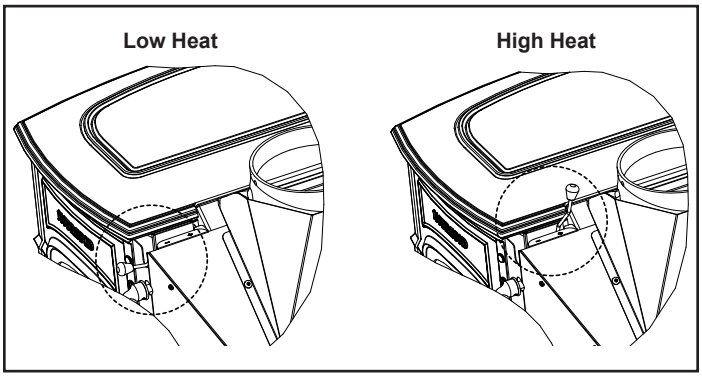

Figure 2.2 - The handle may be positioned anywhere between the two extremes for different heat levels.

A Damper Directs Air Flow Within the Stove

The **damper (by-pass) handle** on the right side of the stove operates the damper to direct air flow within the stove.

The damper is **open** when the handle points **down**, enabling smoke to pass directly into the chimney. The damper must be open when starting or reviving a fire, and always when the griddle or doors are opened.

The damper is **closed** when the handle points **forward.** Smoke travels through the secondary combustion system where it can be further burned, before passing up the chimney. (Figure 2.3)

The damper should always be either fully open or fully closed. There are no intermediate positions. When closing the damper, be sure to pull firmly enough to snap the handle into the locked position.

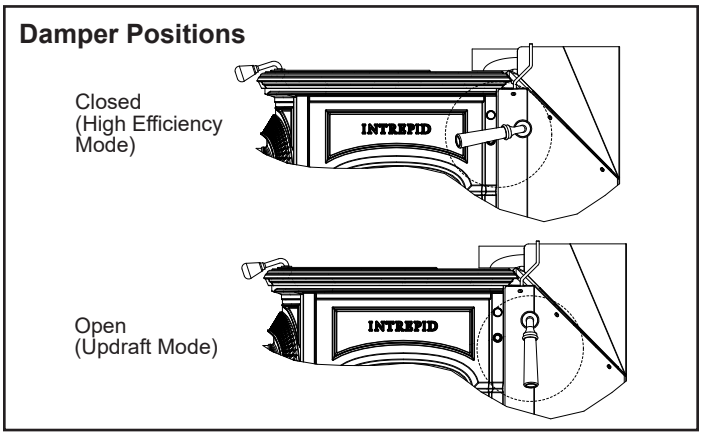

Figure 2.3 - The damper is either open or closed. There are no intermediate positions.

Note: Operation with the front doors open and the damper in the closed position are not permitted and could cause smoke spillage to the inside of the dwelling.

B. Conditioning Your Stove

Cast iron is extremely strong, but it can be broken with a sharp blow from a hammer or from the thermal shock of rapid and extreme temperature change.

The cast plates expand and contract with changes in temperature. When you first begin using your Intrepid FlexBurn®, minimize thermal stress by letting the plates adjust gradually during three or four initial break-in fires following Steps 1-3 below.

Wood Burning Operation

Burn only solid wood in the Intrepid FlexBurn® Wood Stove, and burn it directly on the grate. Do not elevate the fuel. Do not burn coal or other fuels. In the United States, it is against the law to operate this wood heater in a manner inconsistent with operating instructions in this manual.

The bypass damper must be open when starting a fire or when refueling.

Do not use chemicals or fluids to start the fire. Do not burn garbage. Never use flammable fluids such as gasoline, gasoline type lantern fuel, kerosene, charcoal lighter fluid, naptha, engine oil or similar liquids to start or "freshen up" a fire in this heater. Keep all such liquids well away from the heater while it is in use.

1. Open the stove bypass damper, and open the primary air control fully.
2. Place several sheets of crumpled newspaper in the stove. Place six or eight pieces of dry kindling split to a finger-width size on the paper. On the kindling, lay two or three larger sticks of split dry wood approximately 1-2" (25-51 mm) in diameter. (Figure 2.4)

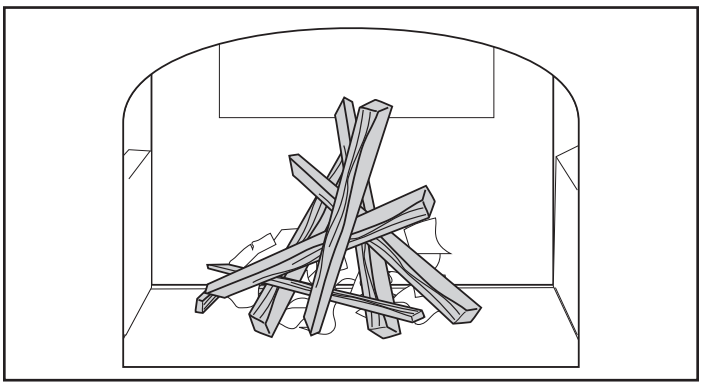

Figure 2.4 - Start the fire with newspaper and dry kindling.

3. Light the newspaper and close the door. Gradually build up the fire by adding a few 3-5" (80-120 mm) diameter pieces of split firewood. **If this is one of the first few "break-in" fires, let the fire burn brightly, and then let it die out.** During the break-in fires, do not let the stove get hotter than 500°F. (260°C) as measured on an optional stove-top thermometer. Adjust the air control lever as necessary to control the fire. Some odor from the stove's hot metal and the paint is normal for the first few fires.

NOTE: Some chimneys must be "primed," or warmed up, before they will draw sufficiently to start a fire. To correct this situation, roll up a couple pieces of newspaper, place them on top of the kindling and toward the back of the stove, light them, and close the doors. This will encourage the smoke to rise rapidly, making it easier to establish a good draft. Once the draft is established, open the front door and light the rest of the fuel from the bottom. Do not light the main bed of fuel until the chimney begins drawing, and repeat the procedure as often as necessary if the initial attempt is unsuccessful.

NOTE: Effectiveness of a "top-down" method to start a fire. Smoke emissions when starting a fire can be difficult to control because the stove is not yet heated to its optimum temperature. One method of reducing emissions during a cold start-up is the use of a "top-down" kindling procedure. In this, place larger pieces of kindling on the bottom of the kindling pile followed by smaller and smaller pieces as the pile is added to. Very finely split pieces should be on the top. Light the kindling pile with a match at the top and allow the kindling to burn downward into the larger pieces. This reduces smoke by slowly increasing the fire size without creating an air-starved condition.

4. **If your Intrepid FlexBurn® has been broken-in previously** using Steps 1-3, continue to build the fire gradually. Add larger wood with a diameter of 3-4" (75-100 mm). Continue adding split logs of this size to the briskly-burning fire until there is a glowing ember bed 2-3" (51-75 mm) deep. A good ember bed is necessary for proper functioning of the combustion system.
5. Close the damper when a sufficient ember bed is established and the griddle temperature reaches 450°F (230°C). This will force the smoke into the secondary combustion chamber where the smoke and gases will ignite if the stove is sufficiently hot. Even though it is possible for the fire to get quite hot within a few minutes after a fire is started, secondary combustion may stop or the fire may go out if the fire dies down immediately as a result of the damper being closed too early.
6. Adjust the air control for your desired heat output.

NOTE: Stove installations vary widely, and the operating guidance given here is only a starting point. This manual will explain in detail how the features of your installation may help or hinder good draft, and how you may need to vary your firing technique if your installation doesn't encourage a good draft.

High-Efficiency Wood Burning with the Catalytic Combustor
Your Intrepid FlexBurn® has an optional catalytic combustor available as an accessory. When operating the stove with the catalytic combustor, use the same operation instructions as outlined in the previous section.

While not required, operating your stove with the catalytic combustor installed creates optimum conditions for secondary combustion and will increase your efficiency up to 15% on low burn, making sure you get the most heat out of each load of wood.

The catalytic element is a ceramic “honeycomb” coated with the catalytic material. The element sits at the bottom of the secondary combustion chamber. Smoke, gases and particulates that are not fully combusted during the secondary combustion process pass through the catalyst, creating a tertiary burn. This results in higher efficiency and lower emissions.

The catalyst will initiate combustion of smoke and particulates at 500° - 600°F (260° - 315°C), half the temperature normally required for unaided secondary combustion. If you followed the startup operation steps in the previous section the stove will be sufficiently hot to allow the combustor to work. Once the combustor starts working, heat generated by burning the smoke will keep it working.

To determine whether the combustor is operating, refer to the temperature probe which shows the operating range of the catalytic combustor. This is located on the back of the stove and is viewed from the top. **NOTE:** It will take several minutes after closing the bypass damper for the temperature probe to fully adjust to the new temperature. If the probe indicator is below the operate catalyst range when the bypass damper is closed, add fuel or open the bypass damper to allow the fire to further build before engaging the catalyst again.

If the probe indicator is above the operate catalyst range, the catalytic combustor is running too hot and may be damaged. In many cases, decreasing the primary air can reduce the catalyst temperature and adding less wood with each loading can also help if overheating is persistent. Do not add wood to the stove if the probe reads above the operate catalyst range.

Avoid using a full load of very dry wood in the firebox, such as dry slab wood or wood with below 14% moisture content. This may result in continuous very high temperatures in the secondary combustion area and damage the combustor.

Never burn treated wood, garbage, solvents or trash. All of these may poison the catalyst and prevent it from operating properly. Never burn cardboard or loose paper except for kindling purposes. Never burn coal; doing so can produce soot or large flakes of char or fly ash that can coat the combustor and cause smoke to spill into the room. Coal smoke can also poison the catalyst so that it won’t operate properly.

C. Ways to Add Fuel

The Intrepid FlexBurn’s griddle lifts for convenient top-loading of logs, and is the easiest way to add fuel. (Figure 2.5)

However, the front doors open as well for adding an occasional log to the fire. The Intrepid FlexBurn® Wood Stove is not approved for operation with the front doors open.

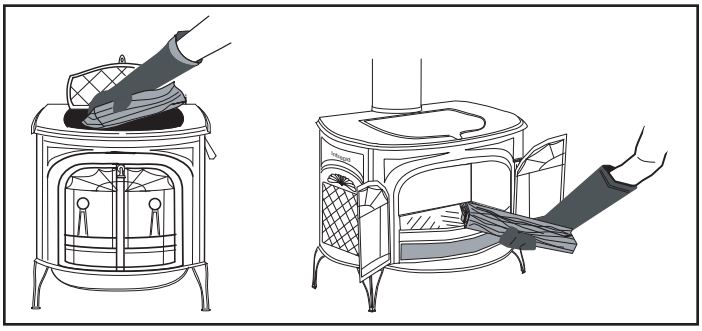

Figure 2.5 - Top loading is the best way to add fuel during regular use. Front loading is useful for kindling a fire.

To open the front doors, insert the handle into the door latch stub and turn it clockwise. (Figure 2.6)

To close them, always close the left door first. Turn the handle in the right door to the left and up (to the open position) and close it. Finally, push on the door as you turn the handle counterclockwise. The doors will draw in slightly, and the handle should offer some resistance as you turn it to the closed position.

To reduce the risk of breaking the glass, avoid striking the glass or slamming the doors.

When you are not using the door handle, store it in the holder behind the right front leg of the stove.

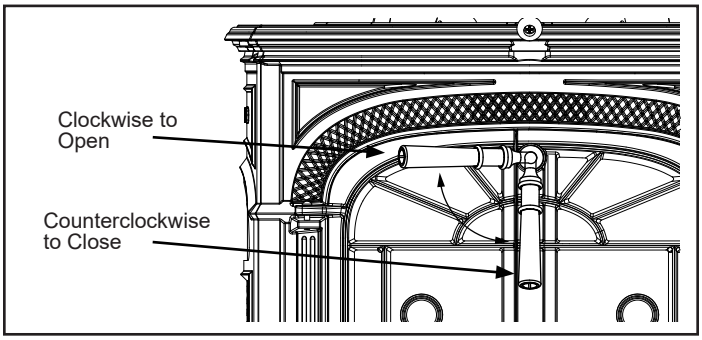

Figure 2.6 - To open the front doors, turn the handle clockwise.

WARNING

Fire Risk

- Do not leave the fire unattended when the door is unlatched
- Operate only with front doors and ash pan door closed.
- Unstable firewood could fall out of the firebox creating a fire hazard to your home.

WARNING

For safety and greatest efficiency, operate your stove only with all doors/griddles fully closed. The test standard for your stove when it is operated in this mode is UL 1482.

Refuel While the Embers Are Still Hot

When reloading, best results will be achieved if you first de-ash the stove by stirring the fuel bed to allow ash to fall through the grate into the ash pan.

Do not break the charcoal into very small pieces or pound or compress the charcoal bed. Check to make sure air holes at the bottom of the fireback are not blocked by ash or embers (blockage will reduce performance of the stove).

It is important that air can circulate through the charcoal bed. Larger pieces of charcoal allow more air to circulate under the wood, resulting in the fire reviving more quickly. (Figure 2.7)

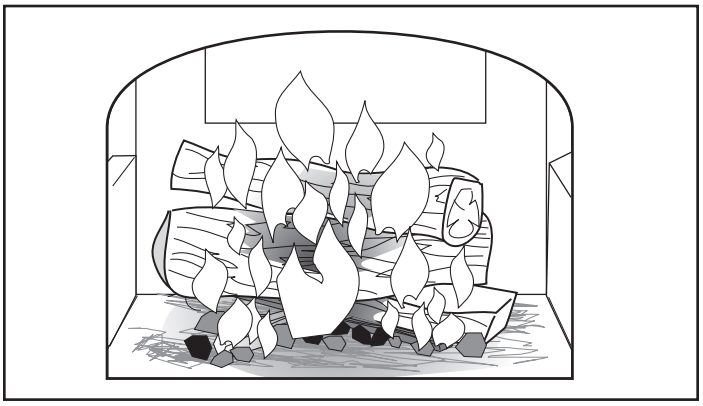

Figure 2.7 - Add full size logs after the ember bed is 3" (75mm) deep.

For safety when refueling, wear long-cuffed stove gloves to protect your hands and forearms. Add fuel while the stove still has plenty of glowing embers to re-kindle the fire and include some smaller pieces of wood in the new fuel load to help the stove regain its operating temperature quickly. Use this sequence as a guide to successful refueling:

1. Open the damper.
2. De-ash the stove as described above. Open the ash door and check the level of ash in the ash pan. Empty the pan if necessary and replace it in the stove. Close the ash door.
3. Open the griddle top and using a poker, push the remaining coals against the rear wall to cover the opening in the refractory. Load the wood (placing smaller pieces first) with the wood against the back wall. Close the griddle top.
4. Wait several minutes for the new wood to fully ignite if the stove top surface temperature is below 450°F (230°C).
5. Close the damper. And adjust the air control for the amount of heat your desire.

NOTE: If the remaining charcoal bed is relatively thick (2-3" / 51-75 mm) and if your fuel is well seasoned, it is possible to add fresh fuel (smaller pieces first) close the door and damper, and reset the primary air control for the desired heat output immediately. This optimizes both efficiency and emissions performance.

WARNING

DO NOT OPERATE THE STOVE WITH THE ASH DOOR OPEN. OPERATION WITH THE ASH DOOR OPEN CAN CAUSE AN OVER-FIRING CONDITION TO OCCUR. OVER-FIRING THE STOVE IS DANGEROUS AND CAN RESULT IN PROPERTY DAMAGE, INJURY OR LOSS OF LIFE.

Andirons Help Protect the Glass

Your stove has andirons to keep logs away from the glass panels. The andirons are essential to maintain clear fire viewing, and should be left in place. Since the andirons may slightly hinder refueling through the front doors, most stove owners will prefer the convenience of top loading through the griddle. Do not place fuel between the andirons and the doors.

Burn Only High-Quality Wood

The Intrepid FlexBurn® is designed to burn natural wood only; do not burn fuels other than that for which it was designed.

IMPORTANT: Do not burn any type of artificial or synthetic materials such as fire starter logs (containing wax) in this appliance. Never burn liquid-based fuels such as kerosene, gasoline or alcohol.

Burning any materials not allowed in these instructions, or over-firing the stove, may void the warranty.

You'll enjoy the best results when burning wood that has been adequately air-dried. The wood should be 14" - 16" (356-406 mm) in length. Avoid burning "green" wood that has not been properly seasoned. Do not burn construction materials; they often contain chemicals and metals that can damage the inside surfaces of the stove and pollute the air. Do not burn ocean driftwood; when it burns, the salt it contains will attack the cast iron.

The best hardwood fuels include oak, maple, beech, ash, and hickory that has been split, stacked, and air-dried outside under cover for at least one year.

If hardwood is not available, you can burn softwoods that include tamarack, yellow pine, white pine, Eastern red cedar, fir, and redwood. These should also be properly dried.

Store split wood under cover to keep it dry. Even for short-term storage, be sure to keep wood a safe distance from the stove and keep it out of the areas around the stove used for refueling and ash removal.

Surface Thermometer is a Valuable Guide to Operation
An optional surface thermometer tells you when to adjust the air control, and when to refuel. (Figure 2.8)

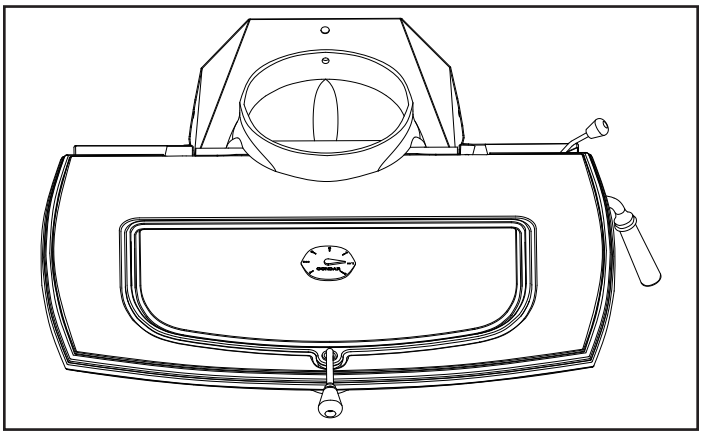

Figure 2.8 - Take temperature readings with a thermometer located in the middle of the griddle.

For example, when the thermometer registers at least 450°F (230°C) on the stove top after start-up you know the stove is hot enough and it may be time to close the damper if a sufficient ember bed has also been established. Note that the stove will warm up much sooner than the chimney, though; a warm chimney is the key to easy, effective stove operation. When thermometer readings drop below 350°F. (175°C) it's time to adjust the air control for a higher burn rate or to reload the stove. A temperature reading over 650°F (340°C) when the damper is closed is a sign to reduce the air supply to slow the burn rate.

Use the following temperature ranges as a guide:

- Readings in the 350°-500°F. (175°-260°C) range indicate low to medium heat output.
- 500°-600°F. (260°-315°C) readings indicate medium heat output.
- Readings of 600°-650°F. (315-340°C) indicate high heat output. Operating your Intrepid FlexBurn® continuously at griddle temperatures higher than 650° F (340°C) may damage the cast iron or enamel finish.

Use the Air Control Settings that Work Best for You
No single air control setting will fit every situation. Each installation will differ depending on the quality of the fuel, the amount of heat desired, and how long you wish the fire to burn; outdoor air temperature and pressure also affect draft.

The control setting also depends on your particular installation's "draft," or the force that moves air from the stove up through the chimney. Draft is affected by such things as the length, type, and location of the chimney, local geography, nearby obstructions, and other factors.

Too much draft may cause excessive temperatures in the Intrepid FlexBurn®, and could even damage the stove. On the other hand, too little draft can cause backpuffing into the room and/or the "plugging" of the chimney.

How do you know if your draft is excessively high or low? Symptoms of too much draft include an uncontrollable burn or a glowing-red stove part. Signs of weak draft are smoke leaking into the room through the stove or chimney connector joints or low heat output.

In some newer homes that are well-insulated and weather-tight, poor draft may result from an insufficient air supply in the house. In such instances, an open window near the stove on the windward side of the house can provide the combustion air supply needed.

Another option for getting more combustion air to the stove is to duct air directly from outside to the stove. In some areas provisions for outside combustion air are required in all new construction.

When first using the stove, keep track of the air control settings. You will quickly find that a specific setting will give you a fixed amount of heat. It may take a week or two to determine the amount of heat and the length of burn you should expect from various settings.

Most installations do not require a large amount of combustion air, especially if adequate draft is available. Do not for any reason attempt to increase the firing of your heater by altering the air control adjustment range outlined in these directions.

D. Ash Disposal

(Refer to the first page of the Operation section.)

DO NOT OPERATE THE STOVE WITH THE ASH DOOR OPEN. OPERATION WITH THE ASH DOOR OPEN CAN CAUSE AN OVER-FIRING CONDITION TO OCCUR. OVER-FIRING THE STOVE IS DANGEROUS AND CAN RESULT IN PROPERTY DAMAGE, INJURY OR LOSS OF LIFE.

Routine ash removal is important for ease of maintenance, and is important for the stove's durability. Remove ash before it reaches the top of the ash pan. Check the level at least once a day. Every few days, clear any ash from the outer edges of the firebox. Most of the ash will fall through the grate. Stir the ash with a shovel or poker so that it falls through the grate slots.

IMPORTANT: Check the level of ash in the ash pan before reloading the stove. If the ash level is close to the top edge of the pan, empty the pan according to this procedure:

- Open the damper.
- Open the griddle or front doors, and use a shovel or poker to stir excess ash through the ash slots in the grate down into the ash pan.
- Close the griddle or doors, and unlatch the ash door. (Figure 2.9) It will pivot, swinging the ash pan out of the stove.

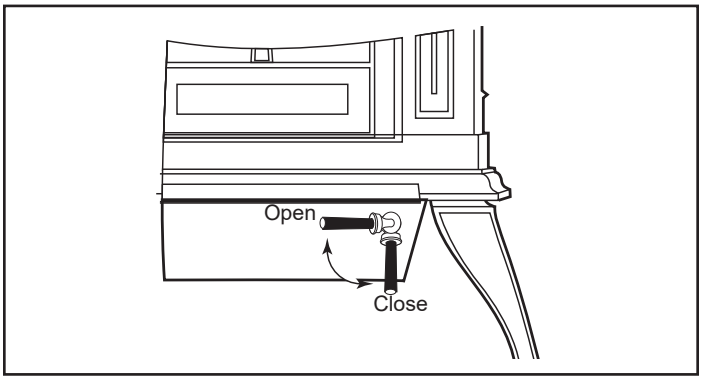

Figure 2.9- Turn the ashdoor handle clockwise to open and counterclockwise to close.

- Slide the cover onto the pan, making sure it is securely closed. (Figure 2.10)

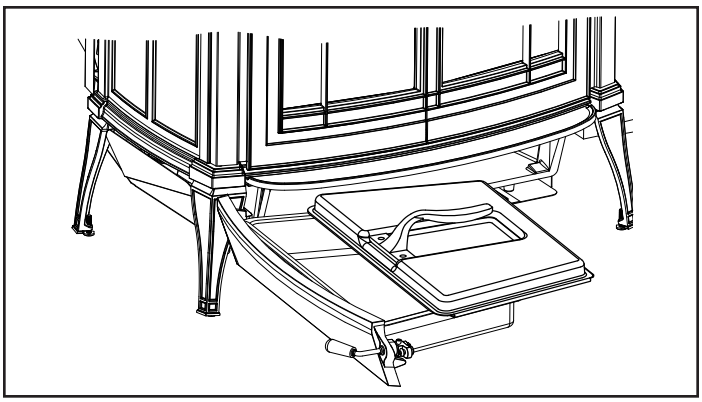

Figure 2.10 - Be sure the cover is securely attached before removing the ash pan.

- Lift to remove the ash pan, making sure to keep it level.
- To keep the cover from sliding off and to keep ash from falling on the floor, do not tilt the ash pan forward.
- If the stove is in operation, close the ash door while disposing of the ash.
- Properly dispose of the ash in a metal container with a tight-fitting lid. Store the container outdoors away from all combustible material.
- Return the ash pan to its original position in the stove, and close and latch the ash door.

⚠ WARNING

Do not operate the stove with the ash door open. This will result in over-firing, and could cause damage to the stove, void the warranty, or even lead to a house fire.

Empty the ash pan regularly, typically every one to three days. The frequency will vary depending on how you operate your Intrepid FlexBurn®: ash will accumulate faster at higher heat outputs.

Removed ash should be placed outdoors in a metal container with a tight-fitting lid. Keep the closed container of ash on a noncombustible floor or on the ground, well away from all combustible materials, pending final disposal. If the ash is disposed of by burial in soil or otherwise locally dispersed, it should be kept in the closed container until all cinders have thoroughly cooled.

⚠ CAUTION

Never use your household or shop vacuum cleaner to remove ash from the stove; always remove and dispose of the ash properly.

E. Opacity (Visible Smoke)

This is the measure of how cleanly your appliance is burning. Opacity is measured in percent; 100% opacity is when an object is totally obscured by the smoke column from a chimney, and 0% opacity means that no smoke column can be seen. As you become familiar with your appliance, you should periodically check the opacity. This will allow you to know how to burn as nearly smoke-free as possible (goal of 0% opacity).

⚠ WARNING



Fire Risk

- DO NOT BURN GARBAGE OR FLAMMABLE FLUIDS SUCH AS GASOLINE, NAPTHA OR ENGINE OIL.
- Do NOT burn treated wood or wood with salt (driftwood).
- May generate carbon monoxide if burn material other than wood.

May result in illness or possible death.

⚠ WARNING



Fire Risk

Keep combustible materials, gasoline and other flammable vapors and liquids clear of appliance.

- Combustible materials may ignite.
- Do NOT store flammable materials in the appliance's vicinity.
- DO NOT USE GASOLINE, LANTERN FUEL, KEROSENE, CHARCOAL LIGHTER FLUID OR SIMILAR LIQUIDS TO START OR "FRESHEN UP" A FIRE IN THIS Appliance.
- Keep all such liquids well away from the appliance while it is in use.

⚠ CAUTION

When burning your first fire, you will experience smoke and odor from the appliance resulting from the curing of paint and burning off of any oils remaining from manufacturing.

OPENWINDOWSDURINGINITIALBURNTODISSIPATE SMOKE AND ODORS!

- Odors may be irritating to sensitive individuals.
- Smoke detectors may activate.

F. Negative Pressure

⚠ WARNING



Asphyxiation Risk

- Negative pressure can cause spillage of combustion fumes, soot and carbon monoxide.
- Appliance needs to draft properly for safety.

Negative pressure results from the imbalance of air available for the appliance to operate properly. It can be strongest in lower levels of the house.

Causes include:

- Exhaust fans (kitchen, bath, etc.)
- Range hoods
- Combustion air requirements for furnaces, water appliances and other combustion appliances
- Clothes dryers
- Location of return-air vents to furnace or air conditioning
- Imbalances of the HVAC air handling system
- Upper level air leaks such as:
  - Recessed lighting
  - Attic hatch
  - Duct leaks

To minimize the effects of negative air pressure:

- Install outside air to the stove with the intake facing prevailing winds during the heating season
- Ensure adequate outdoor air for all combustion appliances and exhaust equipment
- Ensure furnace and air conditioning return vents are not located in the immediate vicinity of the appliance
- Avoid installing the appliance near doors, walkways or small isolated spaces
- Recessed lighting should be a "sealed can" design
- Attic hatches weather stripped or sealed
- Attic mounted duct work and air handler joints and seams taped or sealed

G. Important Information

Creosote is a by-product of slow wood-burning. It's an organic tar that can condense in the flue if it is present in the exhaust, slow-moving, and cools to less than 290°F (130°C). Condensed creosote is volatile, and can generate chimney fires if it gets hot enough. All the features that affect chimney draft also affect creosote condensation - so use whatever combination of installation features and operational steps that will encourage good draft and minimize creosote production.

Because letting the exhaust cool off and slow down is one of the keys to creosote accumulation, it makes sense to line a chimney to match the stove's outlet size, for safety reasons as well as performance. Canadian law requires a matching liner to serve any stove or insert vented through a fireplace chimney; in the US, the National Fire Protection Association (NFPA) recommends a chimney liner if the flue is more than three times bigger (in square area) than the outlet on the stove or insert. Some localities enforce the NFPA guidelines as part of their building codes.

Fuel: Even the best stove installation will not perform well with poor fuel. The best fuel is hardwood that has air-dried 12-18 months. Softwood burns, but not as long as hardwood. 'Green' wood contains a lot of moisture; it will burn, but some of the heat potential is used to boil the extra moisture from the wood. This reduces the amount of heat that reaches your home and can contribute to a creosote problem. There are moisture meters available for firewood; you can also judge your wood by its appearance and weight (Moisture content of 20% or less is best). If you get it green, lift a piece and get a sense of its weight; it can lose a third or more of its weight as it dries. Also look at the ends of a log; as it dries it shrinks and often cracks. The more weathered and cracked a piece is, the drier it is.

Dry wood burns readily with a good chimney draft. But with modern stoves, wood can be too dry and too volatile. Smoke and combustible gases can 'gas out' from the wood quickly and densely enough to overload the combustion system. If you hear a rumbling or roaring noise (like a propane torch) from the stove, that is a sign that the stove is over-firing.

Back-puffing results when the fire produces volatile gases faster than the chimney draft pulls them out of the firebox. The gases back up in the firebox until they are concentrated enough and hot enough to ignite. If your stove back-puffs, the stove needs to cool down. You should open the damper to let the smoke rise to the flue more quickly, allow more air into the firebox, avoid big loads of firewood and check that the wood moisture is not too low.

Draft Testing: An easy way to test your chimney draft is to close the stove's damper, wait a few minutes to let the airflow stabilize, then see whether you can vary the strength of the fire by swinging the air control open and closed. Results are not always instant; you may need to wait a few minutes for a change in the air control setting to have an effect on the fire. If there's no change, then the draft isn't strong enough yet to let you close the damper, and you'll need to open it for awhile longer and manage the fire with the air inlet until the draft strengthens. If you keep track of your burning habits and relate them to their effects on the stove's operation, you'll be rewarded with good performance and a safe system.

Conclusion: Wood-burning is an art rather than a science. Once the stove and chimney system are in place, you can only vary your technique, mostly your timing, to achieve good results. If you keep track of your burning habits and relate them to their effects on the stove's operation, you'll be rewarded with good performance and years of reliable heating.

3 Maintenance

Keep Your Stove Looking New and Working Its Best
Let the fire in the stove go out and allow the stove to cool completely before beginning any maintenance procedure.

Care of the Cast Iron Surface
An occasional dusting with a dry rag will keep the painted cast iron of your Intrepid FlexBurn® looking new.

The stove's paint can be touched up as needed. First, mask the areas, such as enameled parts, glass, or handles, around the spot to be painted. Clean the spot with a wire brush. Remove the griddle and set it aside. It is normal for the griddle to darken after use. You can clean it with a fine-bristle wire brush, or steel wool.

Then, touch up the stove with high temperature stove paint. Apply the paint sparingly; two light coats of paint are better than a single heavy one.

Care of the Porcelain Enamel Surface
Use a dry or slightly damp rag or soft brush to remove spills or stains. For difficult jobs that require a cleaning agent, use only a kitchen appliance cleaner or polish recommended for use on enamel surfaces.

If porcelain enamel becomes chipped or scratched during use, apply "enamel epoxy" to the damaged area and allow to dry. Once the epoxy has dried, sand the area to blend with surrounding area and apply appropriate color touch-up paint. Allow to dry completely before operating stove.

A. Cleaning & Replacement of the Glass

Most of the carbon deposits on the glass will burn off during hot fires.

However, the ash residue that accumulates on the glass surface should be removed regularly to prevent etching. To clean the glass, follow this procedure:

- Be sure the glass is completely cool. DO NOT clean glass while hot.
- Clean the glass with water or a cleaner made especially for this purpose. Do not use abrasive cleaners. Use cleaning agents sparingly and be sure to keep them off the outer surfaces of the stove.
- Rinse the glass thoroughly.
- Dry the glass completely.

Replace Broken Glass Immediately
Do not operate your stove if the glass in the doors is damaged.

If you need to replace the glass, use only the high temperature 5 mm ceramic glass supplied by Vermont Castings. Do not use substitutes.

Removing the Glass
1. Remove the right and left door assemblies by raising the door until the lower and upper hinge pin clears its holes. Place the doors face down on a padded work surface. Be especially careful with enameled doors.
2. Remove the screws that hold the glass retainer clips in place, and remove the clips.
3. Carefully lift the broken glass panel from the door.

Installing the Glass
Check the gasket around the window; it should be soft and resilient so that the glass will seal properly against the door. Replace the gasket if it has hardened or if it is compressed.

1. Center the glass on the gasket.
2. Secure the glass on both doors with the retainer clips. Tighten all screws. (Figure 3.1)
3. Replace the doors on the stove.
4. Open and close the doors to check that they fit and work properly. Adjust as necessary.

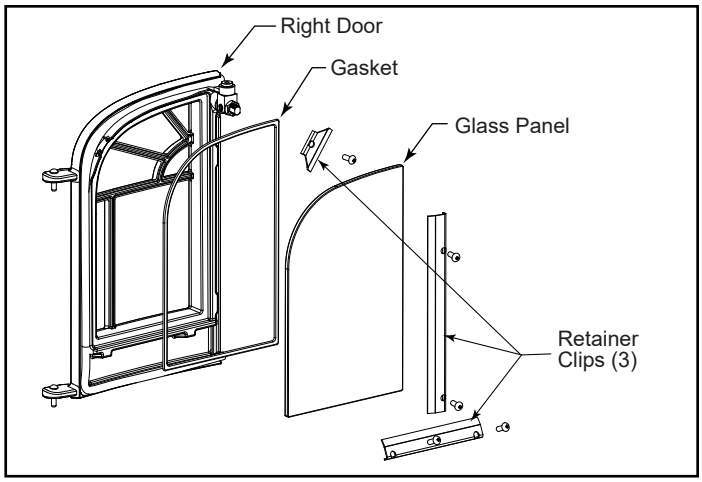

Figure 3.1 - Exploded view of the glass assembly for the right door.

B. Damper Adjustment (as Needed)

The tension on the Intrepid FlexBurn's damper is adjustable to compensate for compression of the gasket that seals the damper to the damper housing. To adjust the damper:

1. Remove the griddle. Loosen the lock nut at the center of the damper. (Figure 3.2)
2. Turn the pressure screw approximately one half turn clockwise with an Allen wrench provided with your stove.
3. Tighten the lock nut. Prevent the pressure screw from turning as you tighten the nut. Re-test the damper.

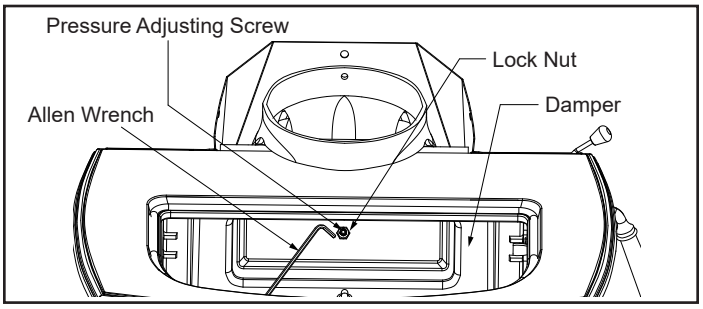

Figure 3.2 - Adjust the damper with the Allen wrench.

Tighten the Damper Handle as Needed

A handle on the left side of the stove controls the damper. The handle attaches to the damper rod with a set screw. Periodically check the set screw and tighten as necessary.

C. Door Latch Adjustment

The front door of the stove should close securely to prevent accidental opening and should close tightly to prevent air from leaking into the fire chamber. The door handle will be positioned vertically when the door is closed.

Over a period of time, the gasket around the door will compress and the latch may need adjustment. To adjust the handle, follow this procedure:

1. Loosen the set screw with a 1/8" Allen wrench.
2. Turn the lock nut clockwise with a 9/16" wrench. (Figure 3.3)
3. Once the desired tightness is achieved, tighten the set screw. (Figure 3.3)

Test the door seal. Close the door on a dollar bill and attempt to pull it free. If the bill is freed with little resistance, the gasket isn't snug enough at that spot. Continue to make small adjustments until the setting is right.

If additional adjusting of the latch does not enable the door to seal sufficiently in one area, try adjusting the gasket in that area. Pack more cement or a smaller diameter gasket into the channel beneath the gasket so the main gasket is raised and makes contact with the door frame. If this procedure doesn't solve the problem, replace the gasket. Instructions for gasket replacement are given later in this section.

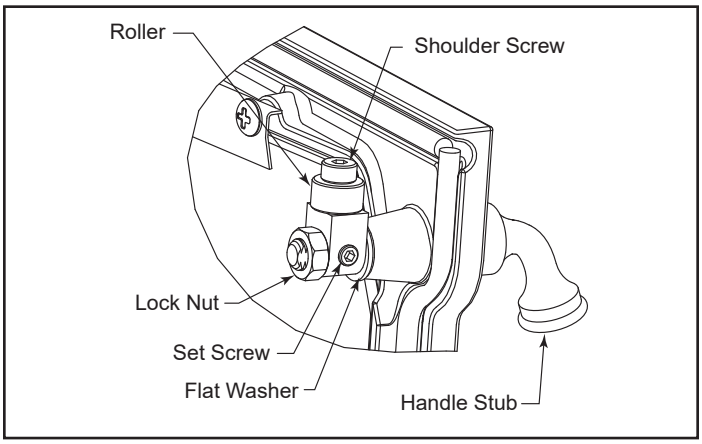

Figure 3.3 - Rotate pawl and/or remove flat washer to adjust latch.

D. Gasket Replacement (as Needed)

Your Intrepid FlexBurn® uses fiberglass rope gaskets to make a tight seal between some parts. With use, particularly on moving parts, gaskets can become brittle and compressed and can begin to lose their effectiveness. These will need periodic replacement.

The sizes of replaceable gasket are listed below, along with their applications.

Gasket Diameter.....And the Parts it Seals

5/16" The griddle to the stove top (wire reinforced gasket)

1/4" Outside damper housing.

3/8" Inside damper housing opening.

5/16" The front doors to the stove front; and the doors to each other.

3/8" The ash door to the front of the bottom panel

3/16" The outer glass panes to the door

If you need to change a gasket, first obtain an appropriate replacement from your Vermont Castings' Authorized Dealer.

Wait until the fire is out and the stove has cooled. Be sure to follow the standard safety procedure for working with dusty materials: wear safety goggles and a dust mask.

The procedure for replacing gaskets is the same, regardless of the gasket location. Follow these steps:

1. Remove the existing gasket by grasping an end and pulling firmly. (Figure 3.4)

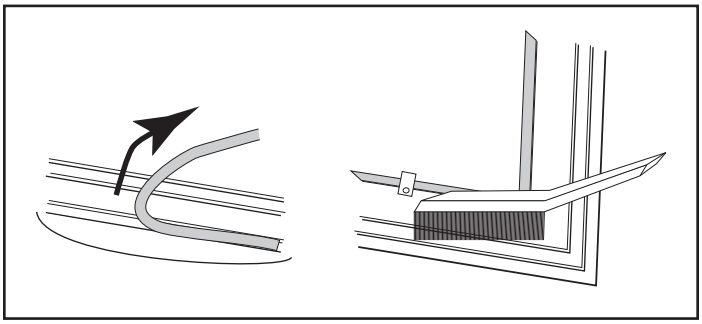

Figure 3.4 - Remove gasket then clean channel with wire brush.

2. Use a wire brush or the tip of a screwdriver to clean the channel of any remaining cement or bits of gasket. Remove stubborn deposits of cement with a cold chisel if necessary. (Figure 3.4)
3. Determine the correct length of the appropriate-sized gasket by laying it out in the channel. Allow an extra 1-2" (25-50 mm), and mark the spot to be cut.
4. Remove the gasket from the channel, place it on a wood cutting surface, and cut it at the marked spot with a utility knife.

Twist the ends slightly to keep the gasket from unraveling.

5. Lay an unbroken 1/8" (3 mm) bead of silicone or cement in the newly-cleaned channel. (Figure 3.5)

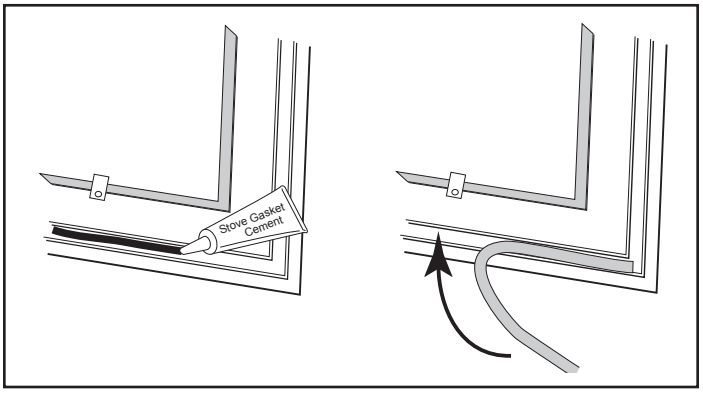

Figure 3.5 - Lay a bead of gasket silicone or cement then press gasket in place.

6. Starting at one end, press the gasket into the channel. (Figure 3.5) Ensure a good joint where the gasket meets before trimming any excess. Do not overlap the gasket ends or leave ends with ragged edges.
7. Press the gasketed part firmly against its normal mating surface to seat the gasket evenly in its channel. Close and latch the door to do this, or tap other parts with the rubber mallet (or hammer/block of wood).
8. Clean any excess cement from around the channel, then let the cement that holds the new gasket dry thoroughly.
9. The stove's doors may need adjustment after you have regasketed them. Initially, it may require loosening the latch to accommodate the new gasket; after a few weeks, it may need tightening to compensate for compression of the new gasket.

All Gasketed Construction Gaskets

Other gaskets form seals between all other non-moving parts, but these are not subject to the same wear and deterioration as gaskets on moving parts. It is unlikely that you will ever need to replace these gaskets unless the involved parts are disassembled and then put back together. If this is the case, the job should be done only by a qualified service technician. Refer to the service parts list for gasket replacement.

E. The Chimney System

Your Intrepid FlexBurn® is designed to reduce creosote build-up significantly. However, regular chimney inspection and maintenance must still be performed. For safety, good stove performance, and to protect your chimney and chimney connector, inspect your chimney and chimney connector on a regular schedule. Clean the system if necessary. Failure to keep the chimney and connector system clean can result in a serious chimney fire.

⚠ WARNING

Inspect and Clean Chimney Frequently – Under certain conditions of use, creosote buildup may occur rapidly.

When wood is burned slowly, it produces tar, organic vapors and moisture that combine to form creosote. The creosote vapors condense in the relatively cool chimney flue of a slow-burning fire. As a result, creosote residue accumulates on the flue lining. When ignited, this creosote makes an extremely hot fire within the flue system that can damage the chimney and overheat adjacent combustible material. If a significant layer of creosote has accumulated —1/8" (3 mm) or more — it should be removed to reduce the risk of a chimney fire.

You can never be too safe. Contact your local fire authority for information on what to do in the event of a chimney fire, and have a clearly understood plan on how to handle one.

If you do experience a chimney fire, act promptly to:

- Close the damper and air control lever.
- Get everyone out of the house.
- Call the Fire Department.

Inspect the system every two weeks during the heating season as part of a regular maintenance schedule. To inspect the chimney, let the stove cool completely. Then, using a mirror and a strong light, sight up through the flue collar into the chimney flue. If you cannot inspect the flue system in this fashion, the stove must be disconnected to provide better viewing access.

Clean the chimney using a brush the same size and shape as the flue liner. Flexible fiberglass rods are used to run the brush up and down the liner, causing any deposits to fall to the bottom of the chimney where they can be removed through the clean-out door.

Clean the chimney connector by disconnecting the sections, taking them outside, and removing any deposits with a stiff wire brush. Reinstall the connector sections after cleaning, being sure to secure the joints between individual sections with sheet metal screws.

If you cannot inspect or clean the chimney yourself, contact your local Vermont Castings dealer or a professional chimney sweep.

Maintenance Schedule - The Stove

Daily:

- Clear any ash build-up from around the air holes and combustion flow path in the refractory fireback.
- Ashes should be removed before they reach the top of the ash pan. Check accumulation at least once a day.
- Keep the area around the stove clear of any combustible materials such as wood, furniture or clothing.

Two Months:

- Check door handle to be sure it is working properly. Gasketing becomes compressed after a period of time. Adjust handle tightness if necessary.
- Check leg bolts and heat shield screws; tighten if necessary.
- **If installed:** Inspect the combustor for fly ash accumulation and physical damage. Clean the combustor as needed.

Annual Spring Cleaning:

- Check gasketing for wear, and replace if necessary.
- Remove ashes from the ash pan and replace with a moisture absorbing material (such as kitty litter) to keep the interior of the stove dry.
- Clean the dust from the inner sides of bottom, rear or pipe heat shields if your stove is equipped with them. Clean surfaces are better heat reflectors than dirty surfaces.
- Touch up the black paint.
- Inspect for and remove ash build-up behind the combustion package. This should be done in conjunction with annual cleaning of the chimney connector. Inspect the passage behind the combustion package (a mirror will be helpful) and vacuum away ash using a flexible vacuum hose inserted in the passage. (Figure 3.6)

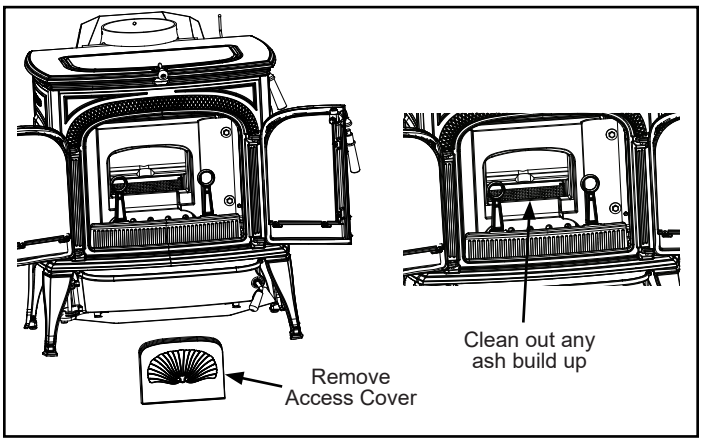

Figure 3.6 - Inspect and clean out ash accumulation behind the combustion system.

The Chimney Connector

Two Weeks

- Inspect the chimney connector and chimney. Clean if necessary.

Two Months:

- Inspect the chimney and chimney connector. Pay particular attention to the horizontal runs of chimney connector, and the elbows. Clean the system if necessary.

Annual Spring Cleaning:

- Disassemble the chimney connector and take it outdoors for inspection and cleaning. Replace weak sections of connector.
- Inspect the chimney for signs of deterioration. Repairs to a masonry chimney should be made by a professional mason. Replace damaged sections of prefabricated chimney. Your local Vermont Castings dealer or a chimney sweep can help determine when replacement is necessary.
- Thoroughly clean the chimney.

F. The Catalytic Element (Optional)

CAUTION

BURN UNTREATED WOOD ONLY. OTHER MATERIALS SUCH AS WOOD PRESERVATIVES, METALS, FOILS, COAL, PLASTIC, GARBAGE, SULPHUR, OR OIL, MAY DAMAGE THE CATALYST.

The Intrepid Flexburn is designed to burn equally well with or without a catalytic combustor (Part No. SRV70007430), however higher efficiencies will be achieved when operating with the catalyst. The following section only applies if the catalytic performance pack (Part No. 0003260) has been purchased and installed. The Intrepid Flexburn is designed and certified to function with or without a catalyst. In the event the combustor becomes non-functioning the combustor can either be replaced or removed completely.

If a non-active catalyst is left installed in the unit, it will burn sluggishly and produce noticeable smoke at the outlet of the venting system. The simplest situation in that case is to remove the deactivated catalyst and operate the unit as non-catalytic. The catalyst can then be replaced as time allows without producing a smoky burn or low heat output.

In the United States it is against the law to operate this wood heater in a manner inconsistent with the operating instructions in this manual.

Under normal operating conditions, the catalytic combustor should remain active for five to seven years (depending on the amount of wood burned). However, it is important to monitor the combustor periodically to ensure that it is functioning properly, as well as to determine when it needs to be replaced. A non-functioning combustor will result in a loss of heating efficiency, and an increase in creosote and emissions.

When to Suspect a Combustor Problem

The best way to evaluate the performance of your Intrepid FlexBurn's combustor is to observe the amount of smoke leaving the chimney — both when the combustor has "lighted-off" and when it has not. Follow these steps:

- With a fire going and the combustor properly activated and the damper closed to route smoke through it as described in the Operation Section, go outside and observe the smoke leaving the chimney.
- Then, open the stove damper and once again check the smoke leaving the chimney.

You should see significantly more smoke when the stove damper is open and exhaust does not pass through the combustor. However, be careful not to confuse smoke with steam from wet wood. Steam dissipates in the air quickly; smoke does not. Remember that a hot stove with a 2"-3" established coal bed is required for catalytic combustion to occur.

If this test indicates a problem, consider other possible factors as well, such as the weather or a change in the quality of your fuel. In warm weather, draft is weaker than it is in colder winter weather, and fires can burn sluggishly. Small, hot fires are a good solution under these conditions.

NOTE

Burning "green" (insufficiently seasoned) wood will result in poorer performance than burning properly seasoned fuel. Reloading with green wood can also thermal shock the catalyst, resulting in cracking, or the eventual fallout, of the ceramic honeycomb substrate. You may have to run your stove hotter (more air) to achieve acceptable performance using green or wet wood.

Also, consider any changes in your operating routine.

Once you have ruled out any other possible causes for a decline in performance, inspect and clean the combustor if necessary. Be sure to protect any surface you use for setting the stove parts aside.

Inspecting the Combustor

Remove access door and inner fireback. Remove the catalytic combustor by lifting up and pulling towards you. (Figure 3.7)

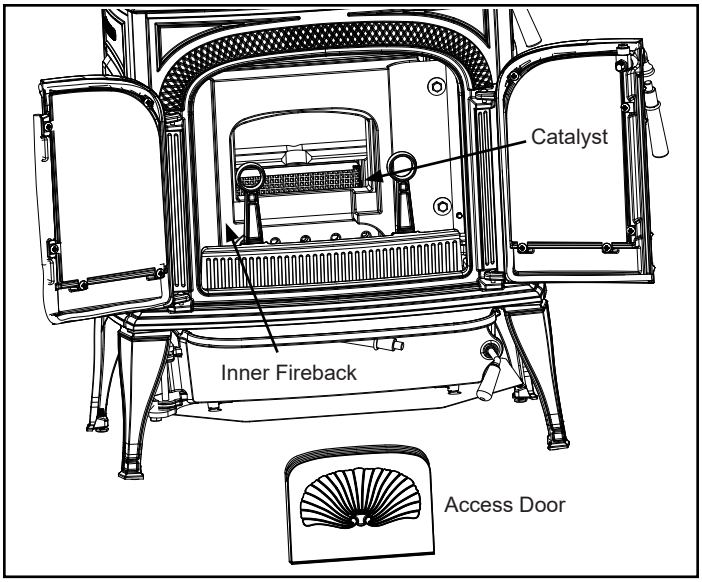

Figure 3.7 - Inspect the catalytic combustor.

Cleaning the Combustor

1. Check the combustors honeycomb-like catalyst for a buildup of fly ash. If any is evident, take the catalyst outside and clean it by blowing air gently through it. Do not push anything through the honeycomb; the combustor should be cleaned by forcing air through the combustor to remove fly ash using a vacuum or can of compressed air.
2. Inspect the catalyst for damage or degradation. Although small hairline cracks will not affect performance, the cataylist should be essentially intact. If the cataylist is broken in pieces or has sections missing, it should be removed or replaced. Call your local Vermont Castings Authorized Dealer for a replacement cataylist.
3. If the cataylist is in good condition and clean, re-install it in the stove and replace the refractory access door.

4 Troubleshooting Guide

With proper installation, operation, and maintenance your wood appliance will provide years of trouble-free service. If you do experience a problem, this troubleshooting guide will assist you or a qualified service person in the diagnosis of a problem and the corrective action to be taken.

Start Fire Problems	Possible Cause	Solution
• Can not get fire started • Excessive smoke spillage • Burns too slowly • Not enough heat output	Not enough kindling/paper or no kindling/paper	Use dry kindling, more paper. Arrange kindling & wood for air movement.
	Not enough air for fire to ignite	Check for restricted termination cap
		Check for blockage of outside air kit (if installed).
		Check for flue blockage.
		Pre-warm flue before starting fire (refer to Building a Fire Section).
		Check for adequate vent height (refer to Chimney Height Section).
		Refer to Negative Pressure section
	Wood condition is too wet, too large	Use dry, seasoned wood (refer to Seasoned Wood Section).
	Bed of coals not established before adding wood	Start with paper & kindling to establish bed of coals (refer to Building a Fire Section).
	Flue blockage such as birds' nests or leaves in termination cap	Have chimney inspected for creosote and cleaned by a certified chimney sweep.
	Down draft or negative pressure Competition with exhaust devices	Do not use exhaust fans during start-up (refer to Negative Pressure Section).
Fire burns too fast	Extremely dry or soft wood	Mix in hardwood.
		Mix in larger pieces of wood after fire is established.
	Overdrafting	Check for correct vent height; too much vertical height creates overdrafting.
		Check location of vent termination (refer to Chimney Termination Requirement Section).
Low Heat Output	Coal Bed too small	Open damper. Establish deeper coal bed and move coals to the rear of the firebox.
Excessive Coal Bed	Operating on high for extended periods	Reduce burn rate and allow coals to burn down before reloading.

Contact your dealer for additional information regarding operation and troubleshooting.
Visit www.vermontcastings.com to locate a dealer.

5 Reference Materials

A. Service & Maintenance Log

Date of Service	Performed By	Description of Service

B. Service Parts List

VERMONT CASTINGS™ **Service Parts**

Intrepid Flexburn

Beginning Manufacturing Date: June 2018
Ending Manufacturing Date: Active

0002115 (Classic Black)
0002116 (Biscuit) - Ending Manufacturing Date: Feb 2022
0002117 (Majolica Brown)
0002118 (Bordeaux)
0002119 (Twilight)
0002115T (Classic Black w/Transition Doors)

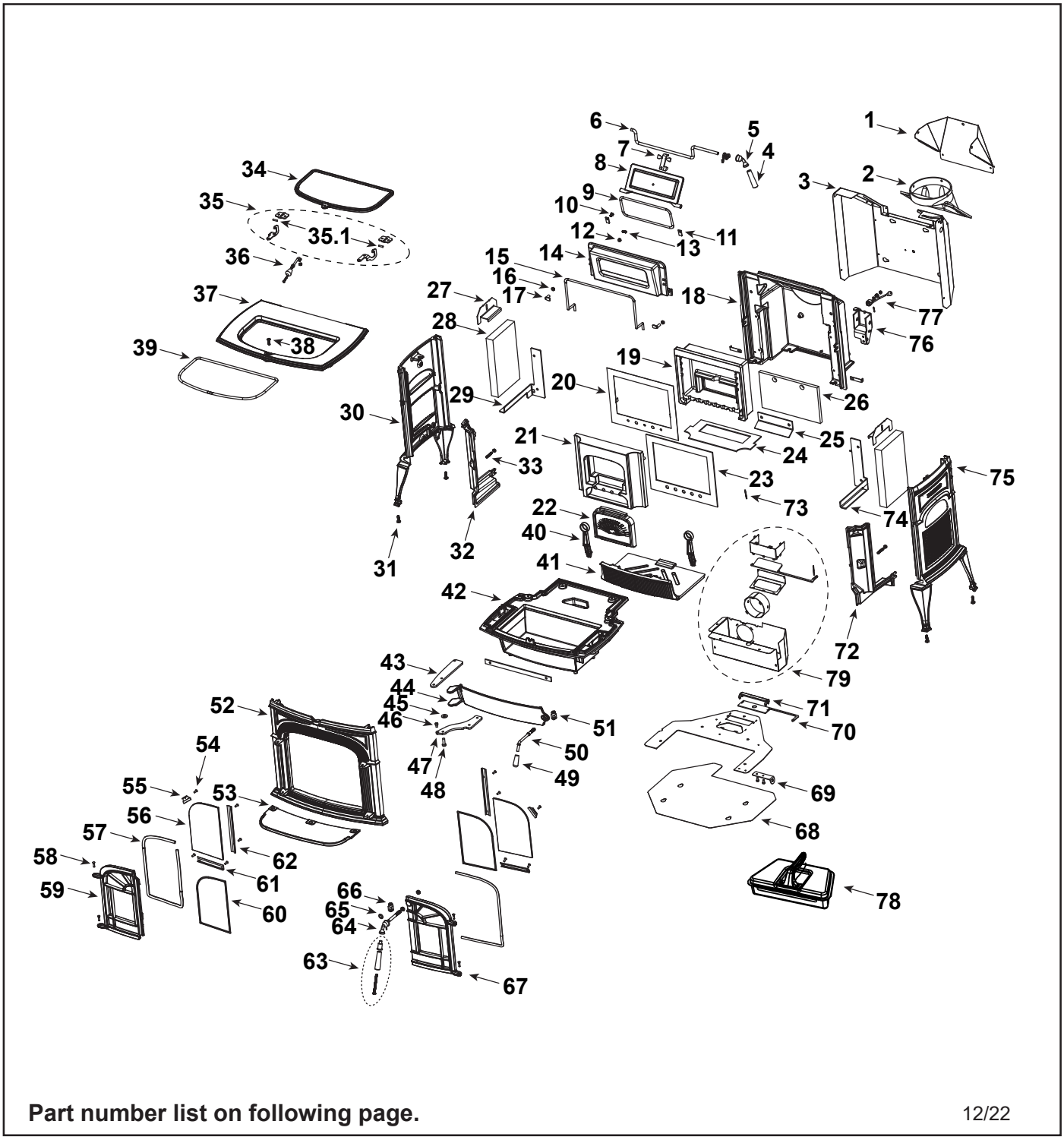

Part number list on following page.

12/22

IMPORTANT: THIS IS DATED INFORMATION. Parts must be ordered from a dealer or distributor. **Hearth and Home Technologies does not sell directly to consumers**. Provide model number and serial number when requesting service parts from your dealer or distributor.



ITEM	DESCRIPTION	COMMENTS	PART NUMBER	Stocked at Depot
1	Heatshield Flue	30007358A		**Y**
2	Flue Collar	Classic Black	1306561A	
		Biscuit	30003181A	
		Majolica Brown	1306561-31A	
		Bordeaux	30006713A	
		Twilight	1306561-30A	
	Flue Collar Gasket	15 Ft	1-00-30002422	**Y**
3	Shroud Rear		30007428A	
4	Damper Handle	Wood	1600664	**Y**
5	Damper Steel Handle		30002720A	
6	Damper Rod		1602523	
7	Damper Adjuster		30007407A	**Y**
8	Damper		30007388A	**Y**
9	Gasket, Fiberglass 3/8 Black	15 Ft	1-00-30002422	**Y**
10	HCS 1/4-20 x 3/8 Z 5-BIN	Pkg of 10	1201337-10	
11	Damper Tab (Qty 2 req)	Pkg of 10	1601488-10	
12	FHN 1/4-20 Z 5-BIN	Pkg of 10	1203210-10	
13	SSS CP 1/4-20 x 1-BIN	Pkg of 10	1200436-10	
14	Damper Housing		30007293A	**Y**
15	Gasket, Fiberglass 1/4 RD PSA	15 Ft	1-00-2312	**Y**
16	FHN 3/8-16 Z-BIN (Qty 2 req)	Pkg of 10	1203161-10	
17	Weld SCR 3/8-16x1, Black (Qty 2 req)	Pkg of 10	1201583-10	
18	Back		30007292A	
	Gasket, Fiberglass 3/8 Black	15 Ft	1-00-30002422	**Y**
19	Refractory Engine		30007299A	**Y**
20	Retainer SS/Gasket		30007305A	**Y**
21	Refractory Fireback		30007300A	**Y**
22	Refractory Cover		30007301A	**Y**
23	Gasket, 1/8 Ceramic Paper		30007304A	**Y**
24	Refractory Gasket		30007381A	**Y**
25	Deflector		30007390A	
26	Insulation Rear		30007367A	
27	Refractory Upper Bracket	Qty 2 req	30007353A	**Y**
28	Refractory Side	Qty 2 req	30007302A	**Y**
29	Refractory Lower LT Bracket		30007307A	**Y**

Additional service part numbers appear on following page.

Beginning Manufacturing Date: June 2018
Ending Manufacturing Date: Active

IMPORTANT: THIS IS DATED INFORMATION. Parts must be ordered from a dealer or distributor. **Hearth and Home Technologies does not sell directly to consumers**. Provide model number and serial number when requesting service parts from your dealer or distributor.



ITEM	DESCRIPTION	COMMENTS	PART NUMBER	Stocked at Depot
30	End Left	Classic Black	30007289A	
		Biscuit	30007289-32A	
		Majolica Brown	30007289-31A	
		Bordeaux	30007289-33A	
		Twilight	30007289-30A	
31	LVLR Bolt - 1/4-20x1 Z-BIN (Qty 4 req)	Pkg of 10	1201745-10	
32	Air Manifold, Left		30007295A	
	Gasket, Fiberglass 3/8 Black	15 Ft	1-00-30002422	**Y**
33	Stud 1/4-20 x 1-1/2 - BIN	Qty 2 req	1204214	
	FHN 1/4-20 Z 5-BIN	Pkg of 10	1203210-10	
34	Griddle		30007309A	
35	Griddle Brackets(Contains brackets, retainers, pins, & bolts)	Right & Left	SRV3000731	
35.1	Griddle Hinge Dowel Pin 3/16 x 3/4	Qty 2 req	30007368	
36	Griddle Handle Assembly		30007426A	**Y**
37	Top	Classic Black	30007287A	
		Biscuit	30007287-32A	
		Majolica Brown	30007287-31A	
		Bordeaux	30007287-33A	
		Twilight	30007287-30A	
	Gasket, 7/16 PSA	15 Ft	1-00-30001910	**Y**
38	CS, SOC FLHD 1/4-20x3/4 - BIN	Pkg of 10	30001787-10	
39	Griddle Gasket	10 Ft	1-00-1203668	**Y**
40	Andiron	Qty 2 req	30007308 A	**Y**
41	Grate Bottom		30007297	**Y**
42	Bottom		30007288A	
	Gasket, Fiberglass 3/8 Black	15 Ft	1-00-30002422	**Y**
	3/16 Inch Round Black LD W/PSA	10 Ft	1-00-1186258229	**Y**
43	Hinge Bracket, Upper		30007386A	
44	Ashdoor		30007318A	
	Gasket, Ashdoor 3/8 Fiberglass	15 Ft	1-00-1203589	**Y**
45	10mm Flat Washer	Pkg of 10	1202560-10	
46	SHCS 1/4-20 x 3/8	Pkg of 10	30001794-10	
47	Hinge Bracket, Lower		30007387A	
48	HCS 5/16-18 x 1 Z-5	Pkg of 2	1-00-2473	
49	Handle, Wood, Ashdoor		1600663	**Y**
50	Shaft, Handle		30005301	
51	Pawl Assembly	Qty 2 req	30005157	**Y**
	Nut Jam 3/8-16 Top Lock - BIN	Pkg of 10	1203290-10	

Additional service part numbers appear on following page.

Beginning Manufacturing Date: June 2018
Ending Manufacturing Date: Active

IMPORTANT: THIS IS DATED INFORMATION. Parts must be ordered from a dealer or distributor. **Hearth and Home Technologies does not sell directly to consumers**. Provide model number and serial number when requesting service parts from your dealer or distributor.



ITEM	DESCRIPTION	COMMENTS	PART NUMBER	Stocked at Depot
52	Front	Classic Black	30007291A	
		Biscuit	30007291-32A	
		Majolica Brown	30007291-31A	
		Bordeaux	30007291-33A	
		Twilight	30007291-30A	
	Gasket, 1/4 Fiberglass	10 Ft	834-1460	**Y**
53	Ashlip	Classic Black	30007317A	
		Biscuit	30007317-32A	
		Majolica Brown	30007317-31A	
		Bordeaux	30007317-33A	
		Twilight	30007317-30A	
54	TRS HD PH 10-24 x 1/2 Z-BIN	Pkg of 10	1200998-10	
55	Glass Clip Corner	Qty 2 req	30007385A	
56	Glass, Left and Right	Qty 2 req	30007394A	**Y**
57	Door Gasket, 5/16-MED	15 Ft	1-00-1203588	**Y**
58	Door Pins	Qty 4 req	1600535	**Y**
59	Door, Left	Classic Black	30007313A	
		Biscuit	30007313-32A	
		Majolica Brown	30007313-31A	
		Bordeaux	30007313-33A	
		Twilight	30007313-30A	
	Door, Left Tans		30007351A	
60	3/16 Inch Round Black LD W/PSA (Glass Gasket)	10 FT	1-00-1186258229	**Y**
61	Glass Clip Bottom	Qty 2 req	30007383A	
62	Glass Clip Side	Qty 2 req	30007384A	
63	Wood Handle w/Lifter		30004175K	**Y**
	Damper Handle Screw	Pkg of 10	1201310-10	**Y**
	Damper Handle, Wood		1600664	**Y**
	Insert Lifter - BIN		30002714	**Y**
64	Front Handle w/Shaft		30007380	**Y**
65	Spring Washer .70IDX BIN	Pkg of 10	63D0069-10	
66	Pawl Assembly		30005157	**Y**
	Nut Jam 3/8-16 Top Lock - BIN	Pkg of 10	1203290-10	
67	Door, Right	Classic Black	30007312A	
		Biscuit	30007312-32A	
		Majolica Brown	30007312-31A	
		Bordeaux	30007312-33A	
		Twilight	30007312-30A	

Additional service part numbers appear on following page.

Beginning Manufacturing Date: June 2018
Ending Manufacturing Date: Active

IMPORTANT: THIS IS DATED INFORMATION. Parts must be ordered from a dealer or distributor. **Hearth and Home Technologies does not sell directly to consumers**. Provide model number and serial number when requesting service parts from your dealer or distributor.



ITEM	DESCRIPTION	COMMENTS	PART NUMBER	Stocked at Depot
	Door, Right Trans		30007350A	
68	Bottom Heat Shield		30007346A	
69	Handle Bracket		30007391A	
	PHM 8 x 12 Black	Pkg of 10	3-30-5000-10	
70	Air Flap INT FB		30007341A	
71	Bracket, Air Flap INT FB		30007342A	
72	Air Manifold, Right		30007296A	
	Gasket, Fiberglass 3/8 Black	15 Ft	1-00-30002422	**Y**
73	Ball Chain #6-3.18mm		30007431A	**Y**
	Ball Chain Fitting	Pkg of 32	SRV2-00-950200	
74	Refractory Lower RT Bracket		30007352A	**Y**
75	End, Right	Classic Black	30007290A	
		Biscuit	30007290-32A	
		Majolica Brown	30007290-31A	
		Bordeaux	30007290-33A	
		Twilight	30007290-30A	
76	Thermostat Cover		30007314A	
77	Thermostat Coil and Shaft Assembly		30007429A	**Y**
	Handle, Thermostat, Wood		30007401	**Y**
78	Ashpan Assembly		30007339	
	Catalytic Performance Pack(Includes Catalyst, Temp Probe, Temp Bracket & Instuctions)		0003260	
	Temp Probe		30007275	
	Catalyst		SRV30007430	
79	Appliance Air Intake		Reference Only	
	Warming Shelf Kit	Classic Black	0000098	
		Biscuit	0001376	
		Majolica Brown	0001410	
		Bordeaux	0001380	
		Twilight	0001408	
	Shelf	Classic Black	1302254A	
		Biscuit	SRV30003214	
		Majolica Brown	SRV1302254-31	
		Bordeaux	SRV30006720	
		Twilight	SRV1302254-30	
	Shelf Bracket	Classic Black	1302272A	
		Biscuit	SRV30003215	
		Majolica Brown	SRV1302272-31	
		Bordeaux	SRV30006721	
		Twilight	SRV1302272-30	
	Outside Air Kit		1-10-09542	
	Finish Bag		SRV30007393	

C. Contact Information

VERMONT CASTINGS

CONTACT INFORMATION

Hearth & Home Technologies
352 Mountain House Road
Halifax, PA 17032

Please contact your Vermont Castings dealer with any questions or concerns.

For the number of your nearest Vermont Castings dealer

log onto www.vermontcastings.com

CAUTION

DO NOT DISCARD THIS MANUAL



- Important operating and maintenance instructions included.
- Read, understand and follow these instructions for safe installation and operation.
- Leave this manual with party responsible for use and operation.

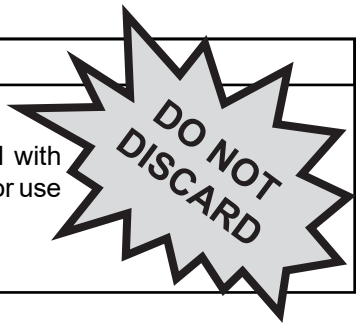

We recommend that you record the following pertinent information for your heating appliance.

Date purchased/installed: _____

Serial Number: _____ Location on appliance: _____

Dealership purchased from: _____ Dealer phone: _____

Notes: _____

_____

_____

_____

This product may be covered by one or more of the following patents: (United States) 5341794, 5263471, 6688302, 7216645, 7047962 or other U.S. and foreign patents pending.

HEARTH & HOME technologies®

APPENDIX B

EPA Correspondence Chain

From: Johnson, Steffan [mailto:johnson.steffan@epa.gov]
Sent: Thursday, January 25, 2018 11:54 AM
To: Sebastian Button <sbutton@omni-test.com>
Cc: Sanchez, Rafael <Sanchez.Rafael@epa.gov>; Aldridge, Amanda <Aldridge.Amanda@epa.gov>; Baumgart-Getz, Adam <Baumgart-Getz.Adam@epa.gov>; Lischinsky, Robert <Lischinsky.Robert@epa.gov>; Toney, Mike <Toney.Mike@epa.gov>
Subject: RE: Woodstove Burn Rate Question

Dear Sebastian,

Thank you for bringing us your concerns regarding the Intrepid IV wood heater and its operations with catalytic controls.

We understand that Omni test laboratories conducted a test as Mr. Toney suggested below. Note that this suggestion was to operate the stove in a manner inconsistent within a normal compliance test protocol.

From our perspective this test run was investigative in nature, conducted to determine if the unit could operate with a catalyst control and function at a higher burn rate. The results of that test demonstrated that such operation would be clearly outside the normal operating envelope for the catalytic controls. As such, we conclude that the investigation verifies the information you initially provided and that the appliance is not capable of proper operations beyond the levels measured by Omni test labs in your compliance testing.

We do NOT consider this test run to be part of the compliance test data set.

We would also add that the operating manual should clearly state that such operations (open door) are not to be conducted while the catalyst is engaged (or something similar such that this investigative test condition is called out as an inappropriate operating condition for a catalyst equipped unit).

While I don't believe we have ever seen a wood heater that could not meet the category 4 burn rates, we recognize that this is a small heater and that the data clearly demonstrate that the unit has been tested under its maximum burn condition.

Please let us know if you have further questions in regards to this matter.

With sincere regards,

Stef Johnson

Stef Johnson | Leader | Measurement Technology Group | Office of Air Quality Planning & Standards | U.S. Environmental Protection Agency | 109 T.W. Alexander Drive | E-143-02 |Research Triangle Park, NC 27711 | Desk: 919.541.4790 | Cell: 919.698.5096 | Fax: 919.541.0516

From: Sebastian Button [mailto:sbutton@omni-test.com]
Sent: Thursday, January 11, 2018 4:50 PM
To: Toney, Mike <Toney.Mike@epa.gov>; Aldridge, Amanda <Aldridge.Amanda@epa.gov>
Cc: Johnson, Steffan <johnson.steffan@epa.gov>; Sanchez, Rafael <Sanchez.Rafael@epa.gov>
Subject: RE: Woodstove Burn Rate Question

Mike,

I understand what it is you are requesting, but you are asking us to, contrary to the stoves intended use, intentionally bypass the appliance emissions controls for a full 5 minutes in order to artificially meet an arbitrarily defined criteria.

If we do this and the emissions are high due to the effect of the startup methodology, but the stove still doesn't get up to a cat 3, what will be the next step?

Best regards,

Sebastian Button
Testing Supervisor
***OMNI-T*est *L*aboratories, Inc.**

From: Toney, Mike [mailto:Toney.Mike@epa.gov]
Sent: Thursday, January 11, 2018 5:25 AM
To: Sebastian Button <sbutton@omni-test.com>; Aldridge, Amanda <Aldridge.Amanda@epa.gov>
Cc: Johnson, Steffan <johnson.steffan@epa.gov>; Sanchez, Rafael <Sanchez.Rafael@epa.gov>
Subject: RE: Woodstove Burn Rate Question

Hi Sebastian,

Thanks for sending the instruction manual. On page 11 under section D. This heater can be used as a fireplace by using the intrepid brand of screen. On page 9 at the bottom states the heater can be used with or without the catalyst and that the same operation procedure apply. This tells me that the door open time can be longer but not longer than the 5 minutes allowed at the start of the test. Since the heater is still on the test stand, I would try leaving the door open longer during startup to achieve the Cat 3 and 4 burn rates. This approach should work. Let us know what happens. Thanks.

From: Sebastian Button [mailto:sbutton@omni-test.com]
Sent: Wednesday, January 10, 2018 3:51 PM
To: Aldridge, Amanda <Aldridge.Amanda@epa.gov>
Cc: Toney, Mike <Toney.Mike@epa.gov>; Johnson, Steffan <johnson.steffan@epa.gov>; Sanchez, Rafael <Sanchez.Rafael@epa.gov>
Subject: RE: Woodstove Burn Rate Question

Hello Amanda,

See attached. Please note on this unit the catalytic combustor is "optional" equipment. We have already, separately, tested this unit without a catalyst. When tested without a catalyst, with the air fully open a burn rate of 1.33 kg/hr was achieved. Naturally, the catalyst is somewhat restrictive, which is why we are not able to get a category 3 burn rate with the catalyst installed.

Best regards,

Sebastian Button
Testing Supervisor
***OMNI-T*est *L*aboratories, Inc.**

From: Aldridge, Amanda [mailto:Aldridge.Amanda@epa.gov]
Sent: Wednesday, January 10, 2018 12:43 PM
To: Sebastian Button <sbutton@omni-test.com>
Cc: Toney, Mike <Toney.Mike@epa.gov>; Johnson, Steffan <johnson.steffan@epa.gov>; Sanchez, Rafael <Sanchez.Rafael@epa.gov>
Subject: RE: Woodstove Burn Rate Question

Amanda Aldridge
US EPA Burnwise
aldridge.amanda@epa.gov
Phone: 919.541-5268

Sebastian – Stef and I were talking about this, and think it would be helpful if you send the manufacturer's owner's manual to us so we can look at the operating instructions. That will help us better understand what is going on.

Thanks,

Amanda Aldridge
US EPA Burnwise
aldridge.amanda@epa.gov
Phone: 919.541-5268

From: Sebastian Button [mailto:sbutton@omni-test.com]
Sent: Wednesday, January 10, 2018 12:46 PM
To: Toney, Mike <Toney.Mike@epa.gov>; Johnson, Steffan <johnson.steffan@epa.gov>
Cc: Sanchez, Rafael <Sanchez.Rafael@epa.gov>
Subject: RE: Woodstove Burn Rate Question

Mike,

The unit in question is a Hearth & Home Technologies, Vermont Castings brand, model Intrepid IV. Testing was performed with crib wood. Run 3 was an attempted high burn with the air control fully open, but only had a burn rate of 1.09 kg/hr. Armed with this information, Run 4 was also run with the air control fully open, hoping that a category 3 burn rate would be achieved. This is a relatively small stove, and we only missed hitting a category 3 by about 15 minutes on run 4.

Runs 3 and 4 were both effectively attempts at a category 3, as the manufacturer was aware that the maximum burn rate is relatively low on this unit. This is a pretty clean unit, preliminary results are as follows:

Run	Burn Rate (kg/hr)	Air Setting	Emission Rate (g/h)	CO Emission Rate (g/min)
2	0.73	Fully Closed	0.25	0.47
1	1.00	~Half Open	0.51	0.50
3	1.09	Fully Open	0.41	1.10
4	1.15	Fully Open	0.49	1.22
Weighted Average			0.42	0.84

Let me know if any other information will be useful. The stove just isn't designed to produce an input rate as high as a category 3, does that disqualify an otherwise clean burning appliance?

Best regards,

Sebastian Button
Testing Supervisor
***OMNI-T**est **L**aboratories, Inc.*

From: Toney, Mike [mailto:Toney.Mike@epa.gov]
Sent: Wednesday, January 10, 2018 8:01 AM
To: Sebastian Button <sbutton@omni-test.com>; Johnson, Steffan <johnson.steffan@epa.gov>
Cc: Sanchez, Rafael <Sanchez.Rafael@epa.gov>
Subject: RE: Woodstove Burn Rate Question

Hi Sebastian,

Thanks for your inquiry. We cannot grant alternative test method approval after the fact of testing already being conducted. If this device cannot burn high and you request an alternative test method a whole new test series would have to be performed. Please give us additional information regarding this heater. Was test conducted on cord or crib, Who is the manufacturer? Did you attempt to burn in category 3 at all? Something seems missing. Was the CO values high for this completed burns, what were their levels?

From: Sebastian Button [mailto:sbutton@omni-test.com]
Sent: Tuesday, January 09, 2018 12:30 PM
To: Johnson, Steffan <johnson.steffan@epa.gov>
Cc: Toney, Mike <Toney.Mike@epa.gov>; Sanchez, Rafael <Sanchez.Rafael@epa.gov>
Subject: Woodstove Burn Rate Question

Stef,

I have a question/request for you with respect to burn rate categories:

We are currently testing catalytic wood stove and after 4 tests have achieved the following results:

Burn Rate (kg/hr)	Air Setting
0.73	Fully Closed
1.00	~Half Open
1.09	Fully Open
1.15	Fully Open

As you can see, two attempts at maximum air setting were performed, but a category 3 burn rate (1.25-1.90 kg/hr) could not be achieved. Would you guys be OK with such a data set, or can I get some sort of approval of this as an alternate test method? Basically I am looking for the easiest path forward that doesn't require further testing. Let me know what you think and please feel free to give me a call if you have any questions.

Thank you,

Sebastian Button
OMNI-Test Laboratories, Inc.
Testing Supervisor
Tel: (503) 643-3788 ext.334
Fax: (503) 643-3799
sbutton@omni-test.com
www.omni-test.com

Mail: PO Box 301367
Portland, Oregon 97294
USA

Street: 13327 NE Airport Way
Portland, Oregon 97230
USA

APPENDIX C

Firebox Volume

PART No: 000-2115

ITEM	QTY	PART No	DESCRIPTION	REMARK

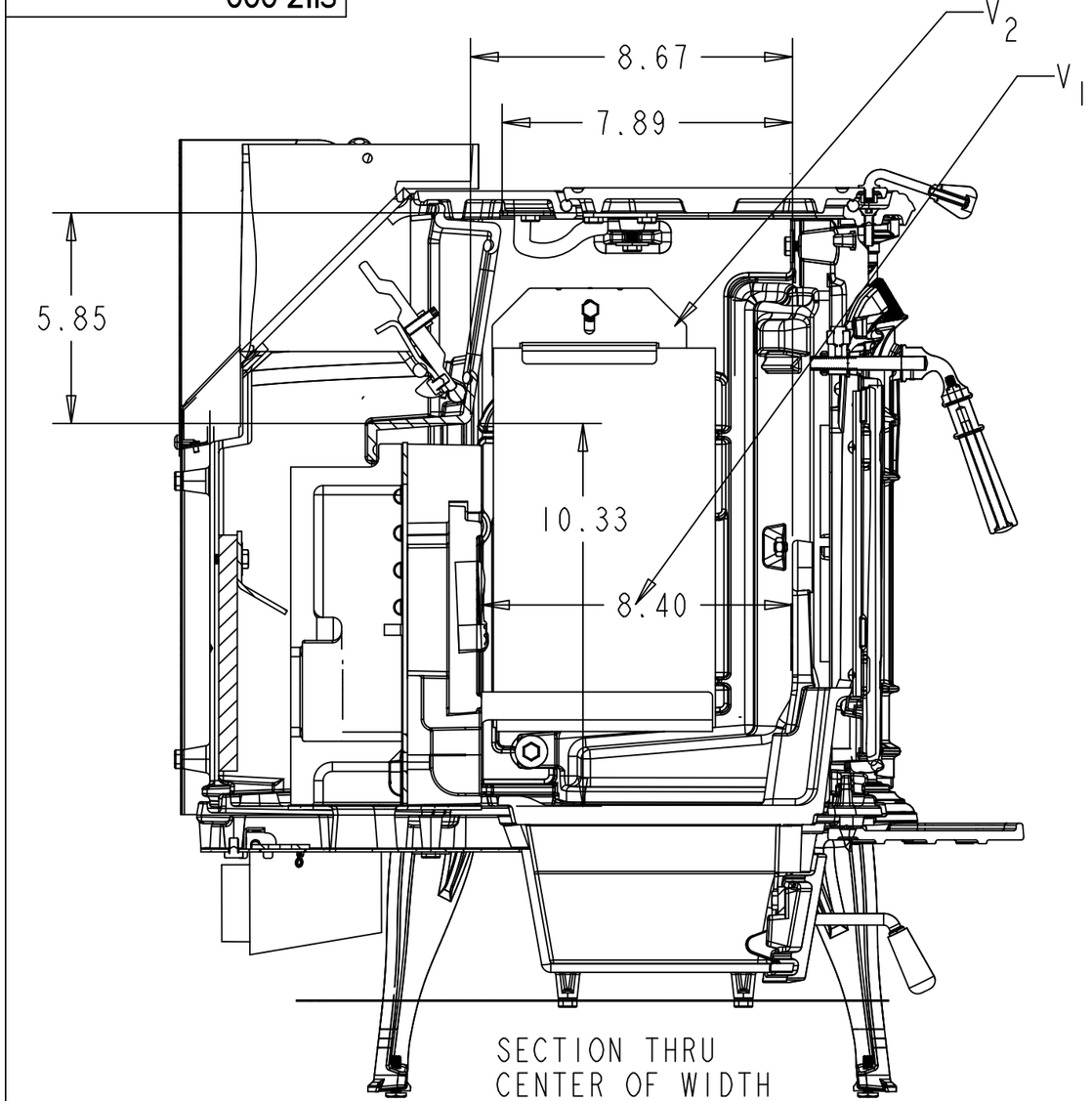

SECTION THRU
CENTER OF WIDTH

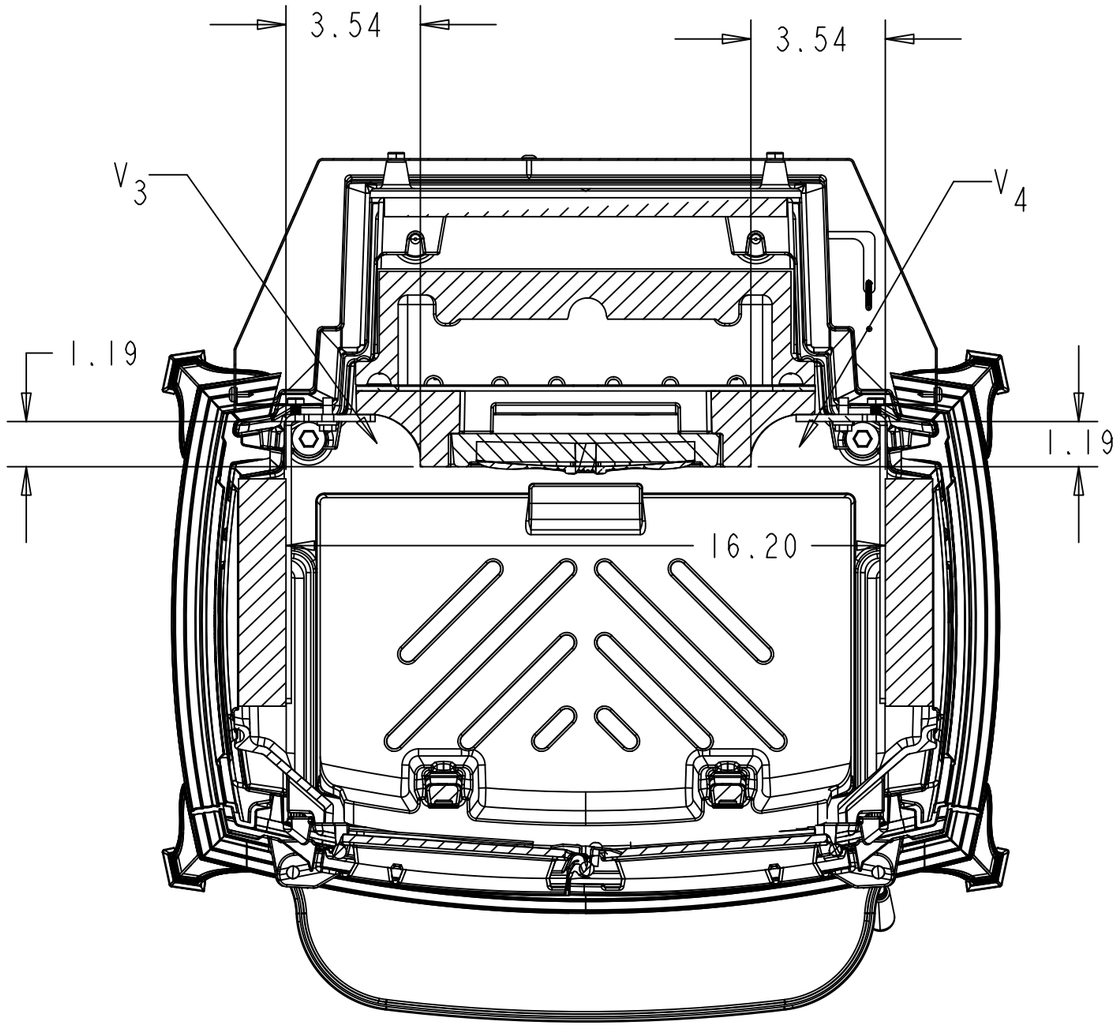

SECTION THRU
CENTER OF HEIGHT

CERTIFICATION VOLUME CALCULATION:

V_1 = 10.33" X 16.20" X 8.40" = .81ft^3

V_2 = ((8.67" + 7.89")/2) X 5.85" X 16.20" = .45 ft^3

V_3 = 1.19" X 3.54" X 10.33" = .025 ft^3

V_4 = 1.19" X 3.54" X 10.33" = .025 ft^3

$VF = V_1 + V_2 + V_3 + V_4$ = .81ft^3 + .45ft^3 + .025ft^3 + .025ft^3 = 1.31ft^3

VERMONT CASTINGS

PROPERTY OF Vermont Castings Group

CONFIDENTIALITY AGREEMENT:

THIS DOCUMENT IS ISSUED ON THE CONDITION THAT THE INFORMATION CONTAINED IN THIS DOCUMENT IS THE PROPERTY OF VCG CORPORATION. EXCEPT AS SPECIFICALLY AUTHORIZED IN WRITING BY VCG CORPORATION. THE HOLDER OF THIS DOCUMENT SHALL KEEP ALL INFORMATION CONTAINED HEREIN CONFIDENTIAL AND SHALL PROTECT SAME IN WHOLE OR IN PART FROM DISCLOSURE AND DISSEMINATION TO ALL THIRD PARTIES.
THIS INFORMATION IS NOT TO BE COPIED, REPRODUCED OR DISCLOSED TO ANY OTHER PARTIES WITHOUT THE WRITTEN CONSENT OF VERMONT CASTINGS.

USED ON: INTREPID IV

TOLERANCES UNLESS OTHERWISE SPECIFIED

LINEAR & DIAMETER	BEND RADIUS
x.x ± 0.039 in (1.0 mm)	0.397 mm + 0.025 mm - 0
x.xx ± 0.020 in (0.5 mm)	
x.xxx ± 0.004 in (0.1 mm)	0.0156 in + 0.001 in - 0

GD & T TO COMPLY WITH ANSI Y14.5-1994

THIRD ANGLE PROJECTION: LEFT SIDE FRONT RIGHT SIDE

MATERIAL THICK: mm (in) MAX: mm (in) MIN: mm (in)

MATERIAL SPECIFICATION: (GA.)

DRAWN BY: PRM | DATE: 12.02.17 | SIZE: B

MATERIAL FINISH:

DESCRIPTION: INTREPID IV

SHEETS: 2 of 4

ECN No: 98460 | REV No: B | PART No: 000-2115

APPENDIX D

Revision History

Date	Project No.	Tech. & Evaluator	Report Sect.	Summary of Changes
03/13/2018	0135WS038E	B Davis K Morgan	ALL	Original report was generated.
02/07/2023	0135WS038E Edition 001	R Tiegs K Morgan	1	Table 3 CO values now show g/min and g/hour. CO averages included in Table 3. (pg 8)
			1	Table 1 & 2 Uncorrected values added (pg7)
			3	Conditioning Data updated (pg18)
			3	Written Instructions added (pg36)
			3	Run 1-4 train precision data added (pg53,76,96,115)
			3	Run 1-4 Uncorrected data added (pg54,55, 77,78,97,98,116,117)
			5	New manual added that clarifies instructions for catalyst bypass and firebox volume. (pg190, 192)
			APPENDIX C	Added appendix for firebox Volume
			APPENDIX D	Revision History Added
			1	Run summary appropriateness statement added. (pg 6)