Non-Confidential Business Information (Non-CBI)

Certification Test Report

Hearth and Home Technologies
Wood-Fired Freestanding Room Heater
Model: Intrepid FlexBurn 2115

Prepared for:	Hearth and Home Technologies 352 Mountain House Road Halifax, PA 17032
Prepared by:	OMNI-Test Laboratories, Inc. 13327 NE Airport Way Portland, OR 97230 (503) 643-3788
Test Period:	December 20, 2017 – January 2, 2018
Report Date:	February 2, 2018
Report Revision Date:	February 7, 2023
Report Number:	0135WS038E
Project Number:	0135WS038E

All data and information contained in this report are confidential and proprietary to Hearth and Home Technologies. Its significance is subject to the adequacy and representative character of the samples and to the comprehensiveness of the tests, examinations, or surveys made. The contents of this report cannot be copied or quoted, except in full, without specific, written authorization from Hearth and Home Technologies and OMNI-Test Laboratories, Inc. No use of the OMNI-Test Laboratories, Inc. name, logo, or registered mark (O-TL) is permitted, except as expressly authorized by OMNI-Test Laboratories, Inc. in writing.

-Document Edition Number (001) 02/07/2023 –

AUTHORIZED SIGNATORIES

This report has been reviewed and approved by the following authorized signatories:

Technician:



Riley Tiegs
OMNI-Test Laboratories, Inc.

Evaluator:

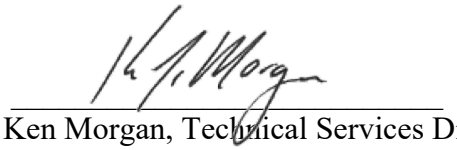

Ken Morgan, Technical Services Director
OMNI-Test Laboratories, Inc.

TABLE OF CONTENTS

PREFACE .....(3 pages)

1. SAMPLING PROCEDURES AND TEST RESULTS.....4
Introduction.....5
Individual Run Summaries 6
Category I Burn Rate Rationale.....7

Table 1 - Particulate Emissions Results.....8
Table 2 - Particulate Emissions Results (First Hour).....8
Table 3 – B415.1 Efficiency and CO Emissions 9
Table 4 - Test Facility Conditions 9
Table 5 - Fuel Measurements and Crib Descriptions - Pretest 9
Table 6 - Fuel Measurements and Crib Descriptions - Test 10
Table 7 - Dilution Tunnel Gas Measurements and Sampling Data 10
Table 8 – Average Temperature Data.....10
Table 9 - Pretest Configurations 11
Table 10 - Test Configurations 11

2. PHOTOGRAPHS/APPLIANCE DESCRIPTION/DRAWINGS.....12
Fuel Photographs 14
Appliance Description 17

3. TEST DATA BY RUN.....18
Conditioning Data.....20
Manufacturers Operating Instructions 38
Run 1.....43
Run 2.....54
Run 3.....71
Run 4.....91
Run 5.....110

4. QUALITY ASSURANCE/QUALITY CONTROL 128
Sample Analysis.....136
Calibrations – EPA Method 28R, ASTM E2515, ASTM E2780 124
Example Calculations 171

5. LABELING & OWNER'S MANUAL.....187

6. FIREBOX VOLUME CALCULATION.....218

7. REVISION HISTORY.....219

Section 1

Sampling Procedures and Test Results

INTRODUCTION

Hearth and Home Technologies retained *OMNI* to perform U.S. Environmental Protection Agency (EPA) certification testing on the Intrepid FlexBurn 2115 wood stove. The Intrepid FlexBurn 2115 wood stove is a radiant freestanding-type non-catalytic room heater. The firebox is constructed of cast iron. Usable firebox volume was measured to be 1.31 cubic feet and the stove is vented through a six-inch flue collar located at the rear of the stove top.

The testing was performed at OMNI-Test Laboratories located in Portland Oregon. The altitude of the laboratory is 30 feet above sea level. The unit was received in good condition and logged in on December 19, 2017, then assigned and labeled with *OMNI* ID #2264. *OMNI* representative Bruce Davis conducted the certification testing and completed all testing by January 8, 2018.

This report is organized in accordance with the EPA-recommended outline and is summarized in the Table of Contents immediately preceding this section. The results in this report are limited to the item submitted.

SAMPLING PROCEDURE

The Intrepid FlexBurn 2115 wood stove was tested in accordance with the U.S. EPA 40 CFR Part 60, Subpart AAA – Standards of Performance for New Residential Wood Heaters using EPA Method 28R, ASTM E2515 and ASTM E2780. Particulate emissions were measured using sampling trains consisting of two filters (front and back).

The model Intrepid FlexBurn 2115 was tested for thermal efficiency and carbon monoxide (CO) emissions in accordance with CSA B415.1-10.

SUMMARY OF RESULTS

The weighted average emissions of the four test runs included in the results indicate a particulate emission rate of 0.64 grams per hour. A total of five tests were conducted, one test, Run 2, was omitted on the basis of only using two thirds of tests in a category. The Intrepid FlexBurn 2115 results are within the emission limit of 2.0 g/hr. for affected facilities manufactured on or after May 15, 2020.

The proportionality results for all 5 test runs were acceptable. Quality check results for each test run are presented in Section 4 of this report.

Model: Intrepid FlexBurn 2115
Hearth and Home Technologies
352 Mountain House Road
Halifax, PA 17032

INDIVIDUAL RUN SUMMARIES – Certification Testing

Run 1 - Attempted category 2 burn rate at primary air control arm setting of 2.75" from the stove top right corner. Observed burn rate of 0.95 kg/hr. (category 2). No sampling anomalies occurred, so this test run is valid and appropriate for inclusion in the weighted average.

Run 2 - Attempted category 4 burn rate at primary air setting of full open. Observed burn rate of 1.19 kg/hr. (category 2). A third test was conducted in category two allowing this test to be omitted from the weighted average on a two for one basis.

Run 3 - Attempted category 2 burn rate at primary air setting of fully closed. Observed burn rate of 0.90 kg/hr. (category 2). No sampling anomalies occurred, so this test run is valid and appropriate for inclusion in the weighted average.

Run 4 - Attempted category 4 burn rate at primary air setting of full open; Observed burn rate of 1.33 kg/hr. (category 3). Quality checks found that the sample dryer temperature for train A exceeded an 80-degree limit by 1 degree for 24 minutes of the test, an evaluation was conducted on proportional rates and gravimetric precision between the two trains and no anomalies were found. A 1-degree variance is also within an allowable calibration value for the instrument. There was insufficient evidence the data had been compromised so the test run was found to be valid and appropriate for inclusion in the weighted average.

Run 5 - Attempted category 4 burn rate at primary air setting of full open; Observed burn rate of 1.30 kg/hr. (category 3). Quality checks found the filter temperature for train B was over limits, data shows a filter temperature of 3218 degrees for the first 87 minutes of the test. This was caused by a thermocouple malfunction that was not discovered at the start of the test. Data for test 4 of this series shows filter B temperatures did not exceed 77 degrees, no means of refrigeration was used to control temperatures. Temperatures of train A filter also gives evidence that filter temperatures did not exceed the 90-degree limit. No additional sampling anomalies occurred, so this test run is valid and appropriate for inclusion in the weighted average.

CATEGORY 1 BURN RATE RATIONALE

EPA Method 28 section 8.1.1.3.2 states the following:

> *Evidence that a wood heater cannot be operated at a burn rate less than 0.80 kg/hr shall include documentation of two or more attempts to operate the wood heater in burn rate Category 1 and fuel combustion has stopped, or results of two or more test runs demonstrating that the burn rates were greater than 0.80 kg/hr when the air supply controls were adjusted to the lowest possible position or settings… NOTE: After July 1, 1990, if a wood heater cannot be operated at a burn rate less than 0.80 kg/hr, at least one test run with an average burn rate of 1.00 kg/hr or less shall be conducted.*

The U.S. Environmental Protection Agency Applicability Determination Index, under Control Number WDS-109, states the following regarding this requirement of Method 28:

> *The purpose of this requirement is to ensure that a good-faith effort has been made to achieve a Category 1 burn rate. However, if the air supply control is tamper-proof, EPA will accept one test as adequate documentation that the stove cannot achieve a Category 1 burn rate. Note that this applies only to stoves which do not reach the low burn rate because of limits on the air supply; manufacturers of stoves which cannot sustain a burn rate at lower air settings will still be required to submit documentation of two or more attempts. In all cases, a test series consisting of at least four runs is required.*

As the Run Notes in Section 5 and Table 1.1a in Section 1 of this report show, run number 3 was operated at a burn-rate of less than 1.0 kg/hr with the combustion air inlet open an area of 0.3 in^2. The primary air control was designed and manufactured with a stop that provides an area of 0.3 in^2 when the control is set to the minimum position. See attached drawings of the primary combustion air manual control. The air controls for this heater are tamper-proof. When tested in accordance with EPA Method 28 the heater cannot be induced to operate at a burn rate less than 0.80 kg/hr therefore Run 3 fulfills the requirements of the standard.

Model: Intrepid FlexBurn 2115
Hearth and Home Technologies
352 Mountain House Road
Halifax, PA 17032

Table 1 – Particulate Emissions

Run	Burn Rate (kg/hr dry)	ASTM E2515 Emissions (g/hr) Corrected[1]	ASTM E2515 Emissions (g/hr) Uncorrected[2]
1	0.95	0.90	0.90
2	1.19	28.99	N/A
3	0.90	0.39	0.50
4	1.33	0.79	0.83
5	1.30	0.46	0.53
Weighted particulate emission average of 4 test runs: 0.64 grams per hour.			

Note: Run number two was omitted on a two for one basis with three tests in category II.

[1]Corrected refers to gravimetric analysis that takes negative filter weights as a negative value in cases where filter residue was transferred to (stuck to) O-ring gaskets to account for the mass transfer.

[2]Uncorrected refers to gravimetric analysis where negative filter weights are taken as zero, thus reporting a higher value by overreporting of transferred filter material. The uncorrected values were added to this report in response to a request by the US EPA.

N/A – Run was omitted from the weighted average.

Table 2 – Particulate Emissions (First Hour)

Run	ASTM E2515 Emissions – First Hour (g/hr) Corrected[1]	ASTM E2515 Emissions – First Hour (g/hr) Uncorrected[2]
1	1.19	1.19
2	50.19	N/A
3	*-0.19	0.00
4	0.28	0.28
5	0.38	0.38

*Negative value was caused by filter residue deposited on O-rings

[1]Corrected refers to gravimetric analysis that takes negative filter weights as a negative value in cases where filter residue was transferred to (stuck to) O-ring gaskets to account for the mass transfer.

[2]Uncorrected refers to gravimetric analysis where negative filter weights are taken as zero, thus reporting a higher value by overreporting of transferred filter material. The uncorrected values were added to this report in response to a request by the US EPA.

N/A – Run was omitted from the weighted average.

Table 3 – B415.1 Efficiency and CO Emissions

Run	Heat Output (BTU/hr)	HHV Efficiency (%)	LHV Efficiency (%)	CO Emissions (g/MJ Output)	CO Emissions (g/kg Dry Fuel)	CO Emissions (g/min)
1	13,039	73.3	79.2	5.95	86.35	1.363
2	14,590	65.5	70.8	15.49	201.11	3.97
3	12,480	75.4	81.5	4.20	62.75	0.921
4	18,502	74.7	80.8	3.82	56.55	1.24
5	17,847	73.6	79.5	4.33	63.07	1.357
Weighted average HHV efficiency of 4 test runs: 74.3%.						
Average CO Emissions of 4 test runs: 1.220 g/min, 73.215g/hour						

Note: Run number two was omitted on a two for one basis with three tests in category II.

Table 4 – Test Facility Conditions

Run	Room Temperature (°F)		Barometric Pressure (Hg)		Air Velocity (ft/min)	
	Before	After	Before	After	Before	After
1	71	69	30.31	30.34	<50	<50
2	70	68	30.50	30.48	<50	<50
3	71	70	30.41	30.40	<50	<50
4	73	72	30.33	30.32	<50	<50
5	73	71	30.36	30.34	<50	<50

Table 5 – Fuel Measurement and Crib Description Summary – PRETEST

Run	Pretest Fuel Weight (Starting weight in lbs)	Pretest Moisture (Dry basis - %)	Coal Bed Weight (lbs)
1	9.8	21.53	2.0
2	9.9	22.97	2.1
3	9.9	22.10	1.8
4	9.9	21.18	2.1
5	9.8	21.18	2.1

Table 6 – Fuel Measurement and Crib Description Summary – TEST

Run	Test Fuel Wet Basis (lbs)	Firebox Volume (ft^3)	Fuel Loading Density Wet Basis (lbs/ft^3)	Test Fuel Dry Basis (lbs)	Piece Length (in)	2x4s Used	4x4s Used
1	8.4	1.31	6.41	7.0	13.5	5	0
2	8.9	1.31	6.79	7.4	13.5	5	0
3	8.4	1.31	6.41	7.1	13.5	5	0
4	8.8	1.31	6.72	7.4	13	5	0
5	9.0	1.31	6.87	7.6	13	5	0

Table 7 – Dilution Tunnel Gas Measurements and Sampling Data Summary

Run	Length of Test (min)	Average Dilution Tunnel Gas Measurements		
		Velocity (ft/sec)	Flow Rate (dscf/min)	Temperature (°F)
1	200	14.03	157.8	89
2	169	13.89	157.0	89
3	216	13.67	154.2	89
4	151	13.66	151.0	99
5	158	13.55	149.6	100

Table 8 - Average Temperature Data

Run	Beginning Surface Temperature Average[a]	Ending Surface Temperature Average[a]	Surface Delta T[b]
1	438	343	95
2	466	381	85
3	433	323	110
4	479	385	94
5	463	386	77
a. All temperatures are in degrees F.			
b. Represents the difference between beginning and ending average surface temperatures.			

Table 9 – Pretest Configuration

Run	Combustion Air	Fuel Added	Fuel Removed	Time (min)
1	2.75" from corner of stove top.	15.2	0	100
2	Fully open	15.5	0	83
3	Fully closed	15.2	0.3	115
4	Fully open	15.4	0	78
5	Fully open	15.1	0	76

Table 10 – Test Configurations

Run	Five-Minute Startup Procedures	Combustion Air
1	Fuel Loading: Fuel loaded by 55 seconds Door: Closed by 58 seconds Bypass: Closed by 1 minute Primary Air: At test setting entire test Secondary: No user adjustment Fan: N/A	Control arm 2.75" from corner of stove top.
2	Fuel Loading: Fuel loaded by 50 seconds Door: Closed by 55 seconds Bypass: Closed by 55 seconds Primary Air: At test setting entire test Secondary: No user adjustment Fan: N/A	Fully open
3	Fuel Loading: Fuel loaded by 50 seconds Door: Closed by 55 seconds Bypass: Closed by 1 minute Primary Air: At test setting entire test Secondary: No user adjustment Fan: N/A	Fully closed
4	Fuel Loading: Fuel loaded by 55 seconds Door: Closed by 1 minute Bypass: Closed by 1 minute Primary Air: At test setting entire test Secondary: No user adjustment Fan: N/A	Fully open
5	Fuel Loading: Fuel loaded by 50 seconds Door: Closed by 1 minute Bypass: Closed by 1 minute Primary Air: At test setting entire test Secondary: No user adjustment Fan: N/A	Fully open

Section 2

Photographs/Appliance Description/Drawings

Hearth and Home Technologies

Intrepid FlexBurn 2115

Test Dates: December 20, 2017 – January 2, 2018









Hearth and Home Technologies
Intrepid FlexBurn 2115

Run 1 – Fuel



Run 1 – Newly Loaded Stove



Run 2 – Fuel



Run 2 – Newly Loaded Stove



Hearth and Home Technologies
Intrepid FlexBurn 2115

Run 3 – Fuel



Run 3 – Newly Loaded Stove



Run 4 – Fuel



Run 4 – Newly Loaded Stove



Run 5 – Fuel



Run 5 – Newly Loaded Stove



WOOD HEATER DESCRIPTION

Appliance Manufacturer: Hearth and Home Technologies

Wood Stove Model: Intrepid FlexBurn 2115. Appliance was delivered for testing as the Intrepid IV, name was changed prior to reporting. All data marked as Intrepid IV.

Type: Radiant freestanding

WOOD HEATER INFORMATION

Materials of Construction: The unit is constructed primarily of cast iron. The firebox is lined with refractory brick that measures 12" x 6" x 1.25". The feed door has a 9.4" x 5.88" glass panel and 5/16" gasket.

Air Introduction System: Primary air is controlled by a Bi-metallic spring thermostat located at the right rear of the stove top. Moving the control arm fully to the left opens the air control, fully to the right closes the air. As the spring heats up, it tightens causing the controlling damper to close. Secondary air is un-controlled, it enters the appliance through an opening located at the rear of the stove on the bottom side. Air travels into the refractory secondary combustion system and enters the flame path through orifices in the refractory walls.

Combustion Control Mechanisms: Primary air is controlled by a Bi-metallic spring thermostat located at the right rear of the stove top. Moving the control arm fully to the left opens the air control, fully to the right closes the air. As the coil spring heats up, it tightens causing the controlling damper to close, cooling of the spring loosens the coil and allows the controlling damper to open. Position of the control arm sets the tension of the coil that determines how much heat is needed to cause the control damper to close.

Combustor: N/A

Internal Baffles: An internal baffle is not used; flame path is either directed through a bypass opening or through the refractory combustion chamber.

Other Features: A bypass is operated by a handle located on the right side of the firebox. The ash pan is accessed through a door located under the front fuel loading door, a top fuel loading door is in the stove top.

Flue Outlet: The 6" diameter flue outlet is located in the top rear of the unit.

WOOD HEATER OPERATING INSTRUCTIONS

Specific Written Instructions: See Section 5 of this report. All markings and instruction materials were reviewed for content prior to printing.

Section 3

Test Data by Run

EPA Weighted Average Emissions
EPA Method 28

Client:	Hearth & Home	Status:	Final
Stove Model:	Intrepid IV Non-Cat	Stove Type:	Non-Catalytic Stove
Test Dates:	12/20/17 - 1/2/18		
Project Number:	0135WS038E		
Tracking Number:	2264		

Weighted Averages		
	Emissions (g/hr):	0.6
	HHV Efficeincy (%):	74.3
	LHV Efficeincy (%):	80.3

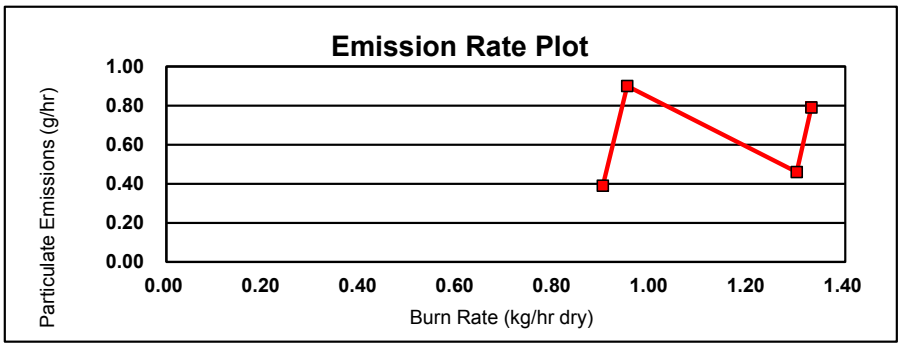

Run #	3	
Burn Rate (dry kg/hr)	0.90	
Category	2	
LHV Efficiency (%)	81.5	
HHV Efficiency (%)	75.4	
Emissions (g/hr)	0.39	
Weighting Factor	0.328	24.47%

Run #	1	
Burn Rate (dry kg/hr)	0.95	
Category	2	
LHV Efficiency (%)	79.2	
HHV Efficiency (%)	73.3	
Emissions (g/hr)	0.9	
Weighting Factor	0.320	23.87%

Run #	5	
Burn Rate (dry kg/hr)	1.30	
Category	3	
LHV Efficiency (%)	79.5	
HHV Efficiency (%)	73.6	
Emissions (g/hr)	0.46	
Weighting Factor	0.312	23.31%

Run #	4	
Burn Rate (dry kg/hr)	1.33	
Category	3	
LHV Efficiency (%)	80.8	
HHV Efficiency (%)	74.7	
Emissions (g/hr)	0.79	
Weighting Factor	0.380	28.35%

Catalyst Aging Record

Conducted by Hearth and Home, Bethel Vermont at a Medium Burn Rate

Oct 2017 - Nov 2017



Total Conditioning 70

Time	Scale Weight	Fuel Added	Moisture Content	Flue Gas
(min)	(kg)	(kg)	%	Deg F
5	4.17	4.17	21.9	282
10	4.04	0		241
15	3.56	0		527
20	2.99	0		617
25	2.47	0		628
30	2.11	0		468
35	1.88	0		361
40	1.7	0		314
45	1.59	0		284
50	1.47	0		261
55	1.34	0		261
60	1.18	0		260
65	1.09	0		256
70	1.02	0		245
75	0.95	0		236
80	0.93	0		233
85	4.76	3.83	21.9	231
90	4.6	0		235
95	4.44	0		241
100	4.24	0		251
105	4.06	0		255
110	3.83	0		259
115	3.63	0		272
120	3.4	0		275
125	3.15	0		286
130	2.93	0		288
135	2.7	0		288
140	2.49	0		283
145	2.29	0		281
150	2.11	0		282
155	1.95	0		277
160	1.81	0		270
165	1.7	0		255
170	1.63	0		241
175	1.59	0		229
180	1.54	0		225
185	1.5	0		215
190	1.45	0		212
195	1.41	0		210
200	1.36	0		210
205	1.32	0		205

210	1.29	0		200
215	1.25	0		199
220	1.2	0		195
225	1.18	0		194
230	1.13	0		190
235	1.11	0		188
240	1.07	0		183
245	1.04	0		180
250	1	0		177
255	0.98	0		177
260	0.95	0		173
265	0.93	0		170
270	0.91	0		170
275	4.35	3.44	20.92	356
280	4.22	0		280
285	3.99	0		265
290	3.74	0		274
295	3.49	0		273
300	3.29	0		291
305	2.99	0		281
310	2.79	0		274
315	2.54	0		278
320	2.27	0		316
325	2	0		298
330	1.84	0		281
335	1.7	0		271
340	1.56	0		264
345	1.41	0		267
350	1.32	0		254
355	1.27	0		244
360	1.2	0		237
365	1.16	0		228
370	1.11	0		227
375	1.07	0		222
380	1.04	0		213
385	5.12	4.08	20.92	214
390	4.99	0		221
395	4.83	0		230
400	4.65	0		241
405	4.47	0		247
410	4.26	0		253
415	4.04	0		264
420	3.81	0		269
425	3.56	0		276
430	3.36	0		280
435	3.11	0		289
440	2.88	0		291

445	2.68	0		289
450	2.45	0		293
455	2.24	0		296
460	2.09	0		283
465	1.97	0		272
470	1.86	0		264
475	1.81	0		253
480	1.77	0		240
485	1.75	0		227
490	1.7	0		219
495	1.68	0		210
500	1.63	0		210
505	1.61	0		199
510	1.59	0		197
515	1.56	0		189
520	1.52	0		187
525	1.5	0		182
530	1.47	0		178
535	1.45	0		174
540	1.43	0		174
545	1.41	0		168
550	1.38	0		167
555	1.36	0		161
560	1.34	0		163
565	1.32	0		161
570	1.29	0		159
575	1.27	0		156
580	1.22	0		154
585	1.2	0		154
590	1.18	0		154
595	1.16	0		148
600	1.13	0		150
605	1.11	0		147
610	1.09	0		149
615	1.07	0		147
620	1.04	0		147
625	4.26	3.22	20.06	304
630	4.04	0		257
635	3.7	0		290
640	3.42	0		296
645	3.2	0		286
650	2.97	0		271
655	2.77	0		254
660	2.59	0		240
665	2.29	0		276
670	2.04	0		294
675	1.81	0		294

680	1.63	0		292
685	1.5	0		289
690	1.36	0		283
695	1.27	0		265
700	1.16	0		268
705	1.07	0		262
710	1.02	0		253
715	1	0		242
720	0.93	0		232
725	4.69	3.76	20.06	230
730	4.54	0		238
735	4.33	0		254
740	4.08	0		272
745	3.81	0		283
750	3.54	0		298
755	3.17	0		317
760	2.86	0		326
765	2.59	0		333
770	2.27	0		34
775	2	0		340
780	1.79	0		326
785	1.66	0		314
790	1.59	0		297
795	1.54	0		282
800	1.5	0		271
805	1.45	0		261
810	1.41	0		254
815	1.36	0		245
820	1.32	0		239
825	1.27	0		230
830	1.25	0		228
835	1.2	0		224
840	1.18	0		217
845	1.16	0		210
850	1.13	0		204
855	1.11	0		200
860	1.07	0		197
865	1.04	0		191
870	1.04	0		187
875	1.02	0		179
880	1	0		177
885	0.98	0		171
890	0.95	0		169
895	0.95	0		164
900	0.95	0		161
905	0.93	0		160
910	4.38	3.45	21.72	308

915	4.22	0		238
920	3.99	0		237
925	3.79	0		244
930	3.58	0		241
935	3.49	0		261
940	3.11	0		265
945	2.9	0		261
950	2.72	0		258
955	2.54	0		262
960	2.31	0		273
965	2.15	0		268
970	2	0		266
975	1.79	0		294
980	1.56	0		277
985	1.41	0		272
990	1.25	0		268
995	1.16	0		260
1000	1.04	0		254
1005	1	0		243
1010	0.95	0		236
1015	0.93	0		225
1020	0.91	0		221
1025	0.86	0		215
1030	4.81	3.95	21.72	220
1035	4.67	0		228
1040	4.51	0		237
1045	4.31	0		244
1050	4.1	0		252
1055	3.9	0		257
1060	3.7	0		265
1065	3.45	0		273
1070	3.22	0		279
1075	2.97	0		280
1080	2.74	0		279
1085	2.52	0		283
1090	2.31	0		283
1095	2.11	0		284
1100	1.95	0		275
1105	1.81	0		266
1110	1.72	0		258
1115	1.66	0		244
1120	1.61	0		233
1125	1.59	0		223
1130	1.56	0		214
1135	1.52	0		206
1140	1.5	0		199
1145	1.45	0		195

1150	1.43	0		189
1155	1.41	0		187
1160	1.36	0		183
1165	1.34	0		180
1170	1.32	0		176
1175	1.27	0		174
1180	1.25	0		170
1185	1.22	0		169
1190	1.2	0		165
1195	1.18	0		164
1200	1.16	0		161
1205	1.13	0		163
1210	1.09	0		163
1215	1.07	0		163
1220	1.02	0		161
1225	1	0		160
1230	0.98	0		159
1235	0.93	0		159
1240	0.91	0		156
1245	0.88	0		159
1250	0.86	0		158
1255	4.24	3.38	20.76	386
1260	3.92	0		305
1265	3.45	0		327
1270	3.11	0		332
1275	2.72	0		345
1280	2.34	0		356
1285	1.97	0		354
1290	1.7	0		356
1295	1.47	0		341
1300	1.32	0		328
1305	1.16	0		315
1310	1.07	0		293
1315	1.02	0		283
1320	1	0		266
1325	4.85	3.85	20.76	251
1330	4.67	0		255
1335	4.44	0		265
1340	4.2	0		274
1345	3.92	0		287
1350	3.56	0		316
1355	3.17	0		331
1360	2.93	0		316
1365	2.65	0		328
1370	2.38	0		332
1375	2.09	0		340
1380	1.84	0		345

1385	1.668	0		326
1390	1.59	0		303
1395	1.52	0		291
1400	1.47	0		278
1405	1.43	0		267
1410	1.38	0		260
1415	1.32	0		254
1420	1.27	0		250
1425	1.22	0		246
1430	1.2	0		241
1435	1.16	0		239
1440	1.11	0		233
1445	1.07	0		228
1450	1.02	0		224
1455	1	0		220
1460	0.98	0		217
1465	4.72	3.74	20.98	322
1470	4.54	0		264
1475	4.29	0		256
1480	3.97	0		275
1485	3.65	0		298
1490	3.33	0		304
1495	2.86	0		341
1500	2.52	0		344
1505	2.18	0		350
1510	1.86	0		356
1515	1.52	0		358
1520	1.34	0		341
1525	1.16	0		321
1530	1.02	0		314
1535	1	0		302
1540	0.88	0		294
1545	4.54	3.66	20.98	267
1550	4.35	0		267
1555	4.1	0		278
1560	3.81	0		296
1565	3.49	0		312
1570	3.15	0		324
1575	2.81	0		338
1580	2.49	0		342
1585	2.2	0		3343
1590	1.9	0		351
1595	1.7	0		341
1600	1.56	0		326
1605	1.5	0		306
1610	1.43	0		296
1615	1.36	0		283

1620	1.32	0		276
1625	1.27	0		268
1630	1.22	0		263
1635	1.18	0		255
1640	1.13	0		251
1645	1.09	0		245
1650	1.04	0		235
1655	1.02	0		232
1660	0.98	0		228
1665	0.95	0		225
1670	0.93	0		214
1675	0.91	0		212
1680	0.88	0		212
1685	4.72	3.84	20.56	364
1690	4.49	0		299
1695	4.13	0		310
1700	3.76	0		340
1705	3.42	0		329
1710	3.13	0		299
1715	2.77	0		310
1720	2.49	0		282
1725	2.18	0		266
1730	1.84	0		261
1735	1.47	0		312
1740	1.2	0		326
1745	1.07	0		306
1750	0.98	0		287
1755	0.93	0		271
1760	4.83	3.90	20.56	245
1765	4.65	0		250
1770	4.42	0		260
1775	4.2	0		272
1780	3.9	0		293
1785	3.58	0		313
1790	3.27	0		319
1795	2.95	0		337
1800	2.61	0		350
1805	2.29	0		352
1810	1.97	0		355
1815	1.75	0		342
1820	1.59	0		328
1825	1.47	0		311
1830	1.38	0		294
1835	1.34	0		279
1840	1.27	0		272
1845	1.2	0		266
1850	1.16	0		260

1855	1.11	0		251
1860	1.04	0		249
1865	1	0		246
1870	0.95	0		242
1875	4.74	3.79	21.38	329
1880	4.47	0		281
1885	4.01	0		318
1890	3.65	0		336
1895	3.33	0		336
1900	2.97	0		374
1905	2.61	0		346
1910	2.31	0		342
1915	2	0		342
1920	1.56	0		342
1925	1.43	0		337
1930	1.27	0		320
1935	1.18	0		297
1940	1.11	0		284
1945	1.07	0		277
1950	5.44	4.37	21.38	251
1955	5.28	0		249
1960	5.1	0		256
1965	4.9	0		260
1970	4.65	0		279
1975	4.38	0		295
1980	4.1	0		301
1985	3.81	0		310
1990	3.51	0		320
1995	3.13	0		335
2000	2.81	0		344
2005	2.49	0		345
2010	2.22	0		347
2015	2.02	0		334
2020	1.88	0		313
2025	1.79	0		291
2030	1.72	0		278
2035	1.68	0		265
2040	1.63	0		261
2045	1.59	0		250
2050	1.52	0		248
2055	1.47	0		248
2060	1.43	0		241
2065	1.38	0		235
2070	1.34	0		233
2075	1.29	0		226
2080	1.25	0		226
2085	1.2	0		222

2090	1.13	0		219
2095	1.11	0		216
2100	1.07	0		214
2105	4.69	3.62	19.38	373
2110	4.4	0		331
2115	4.1	0		332
2120	3.83	0		308
2125	3.49	0		319
2130	3.08	0		332
2135	2.72	0		341
2140	2.43	0		343
2145	2.09	0		337
2150	1.86	0		317
2155	1.68	0		307
2160	1.5	0		303
2165	1.34	0		293
2170	1.25	0		279
2175	1.13	0		284
2180	1	0		260
2185	0.95	0		253
2190	4.97	4.02	19.38	244
2195	4.78	0		256
2200	4.58	0		269
2205	4.33	0		282
2210	4.06	0		293
2215	3.79	0		300
2220	3.49	0		308
2225	3.24	0		311
2230	2.97	0		306
2235	2.74	0		305
2240	2.52	0		304
2245	2.27	0		312
2250	2.09	0		309
2255	1.88	0		300
2260	1.79	0		288
2265	1.7	0		279
2270	1.63	0		273
2275	1.59	0		266
2280	1.56	0		258
2285	1.52	0		251
2290	1.47	0		249
2295	1.43	0		242
2300	1.38	0		238
2305	1.36	0		236
2310	1.29	0		232
2315	1.27	0		229
2320	1.22	0		230

2325	1.18	0		227
2330	1.13	0		224
2335	1.11	0		221
2340	1.07	0		217
2345	1.02	0		216
2350	1	0		213
2355	0.95	0		212
2360	3.88	2.93	19.5	323
2365	3.74	0		266
2370	3.51	0		258
2375	3.29	0		263
2380	3.08	0		267
2385	2.9	0		261
2390	2.74	0		260
2395	2.52	0		270
2400	2.34	0		266
2405	2.13	0		266
2410	2	0		264
2415	1.75	0		282
2420	1.59	0		274
2425	1.45	0		269
2430	1.34	0		262
2435	1.18	0		266
2440	1.09	0		255
2445	1.02	0		248
2450	0.98	0		238
2455	0.93	0		227
2460	5.24	4.31	19.5	220
2465	5.1	0		218
2470	4.97	0		230
2475	4.81	0		235
2480	4.65	0		241
2485	4.47	0		250
2490	4.24	0		256
2495	4.04	0		265
2500	3.79	0		274
2505	3.56	0		281
2510	3.33	0		285
2515	3.11	0		289
2520	2.86	0		290
2525	2.65	0		295
2530	2.4	0		297
2535	2.18	0		299
2540	2	0		290
2545	1.86	0		282
2550	1.77	0		271
2555	1.7	0		261

2560	1.66	0		252
2565	1.61	0		244
2570	1.59	0		233
2575	1.56	0		227
2580	1.52	0		219
2585	1.5	0		212
2590	1.47	0		203
2595	1.45	0		200
2600	1.43	0		195
2605	1.41	0		191
2610	1.36	0		187
2615	1.34	0		184
2620	1.32	0		182
2625	1.29	0		178
2630	1.27	0		176
2635	1.22	0		174
2640	1.2	0		172
2645	1.18	0		167
2650	1.16	0		166
2655	1.13	0		164
2660	1.09	0		164
2665	1.04	0		162
2670	1.02	0		159
2675	1	0		158
2680	0.98	0		160
2685	0.93	0		160
2690	4.81	3.88	20.16	323
2695	4.6	0		27
2700	4.22	0		305
2705	3.88	0		315
2710	3.56	0		287
2715	3.2	0		309
2720	2.93	0		281
2725	2.68	0		258
2730	2.31	0		296
2735	2.2	0		307
2740	1.79	0		310
2745	1.56	0		310
2750	1.34	0		304
2755	1.25	0		289
2760	0.98	0		268
2765	5.1	4.12	20.16	255
2770	4.92	0		259
2775	4.72	0		268
2780	4.47	0		282
2785	4.22	0		288
2790	3.92	0		303

2795	3.63	0		310
2800	3.33	0		31
2805	2.99	0		325
2810	2.7	0		325
2815	2.43	0		324
2820	2.18	0		324
2825	1.95	0		320
2830	1.77	0		308
2835	1.7	0		292
2840	1.63	0		277
2845	1.59	0		266
2850	1.54	0		257
2855	1.5	0		249
2860	1.45	0		243
2865	1.43	0		241
2870	1.38	0		237
2875	1.34	0		232
2880	1.29	0		231
2885	1.25	0		228
2890	1.2	0		224
2895	1.18	0		224
2900	1.13	0		222
2905	1.09	0		222
2910	1.07	0		217
2915	1.02	0		214
2920	0.98	0		214
2925	3.97	2.99	20.54	300
2930	3.83	0		251
2935	3.56	0		259
2940	3.33	0		257
2945	3.15	0		253
2950	2.97	0		254
2955	2.77	0		257
2960	2.59	0		260
2965	2.31	0		284
2970	2.11	0		275
2975	1.88	0		277
2980	1.72	0		296
2985	1.7	0		272
2990	1.38	0		262
2995	1.27	0		258
3000	1.18	0		248
3005	1.11	0		239
3010	1.07	0		231
3015	1.04	0		224
3020	1	0		216
3025	0.95	0		209

3030	0.91	0		207
3035	4.97	4.06	20.54	198
3040	4.85	0		207
3045	4.69	0		213
3050	4.56	0		222
3055	4.4	0		231
3060	4.22	0		237
3065	4.04	0		246
3070	3.83	0		248
3075	3.61	0		255
3080	3.4	0		259
3085	3.2	0		259
3090	3.02	0		259
3095	2.83	0		259
3100	2.65	0		263
3105	2.47	0		265
3110	2.27	0		268
3115	2.13	0		266
3120	1.97	0		264
3125	1.84	0		261
3130	1.75	0		255
3135	1.68	0		244
3140	1.63	0		236
3145	1.59	0		225
3150	1.54	0		221
3155	1.52	0		209
3160	1.47	0		207
3165	1.45	0		201
3170	1.41	0		196
3175	1.38	0		191
3180	1.34	0		186
3185	1.32	0		178
3190	1.29	0		175
3195	1.27	0		173
3200	1.25	0		169
3205	1.22	0		163
3210	1.2	0		162
3215	1.18	0		157
3220	1.18	0		152
3225	1.16	0		150
3230	1.16	0		148
3235	1.13	0		144
3240	1.11	0		139
3245	1.07	0		141
3250	1.04	0		145
3255	1	0		145
3260	0.98	0		148

3265	0.93	0		149
3270	3.88	2.95	22	285
3275	3.67	0		253
3280	3.51	0		235
3285	3.36	0		229
3290	3.2	0		222
3295	3.08	0		218
3300	2.97	0		210
3305	2.72	0		246
3310	2.59	0		230
3315	2.47	0		226
3320	2.29	0		240
3325	2.13	0		238
3330	2.03	0		238
3335	1.88	0		236
3340	1.68	0		258
3345	1.52	0		254
3350	1.36	0		254
3355	1.25	0		249
3360	1.09	0		258
3365	0.98	0		249
3370	0.91	0		241
3375	0.86	0		239
3380	5.17	4.31	22	232
3385	4.76	0		239
3390	4.6	0		243
3395	4.42	0		250
3400	4.22	0		253
3405	3.99	0		260
3410	3.76	0		267
3415	3.51	0		274
3420	3.29	0		276
3425	3.06	0		283
3430	2.81	0		281
3435	2.63	0		283
3440	2.38	0		283
3445	2.15	0		289
3450	1.95	0		287
3455	1.79	0		279
3460	1.66	0		273
3465	1.56	0		264
3470	1.5	0		253
3475	1.45	0		238
3480	1.43	0		230
3485	1.38	0		223
3490	1.34	0		216
3495	1.32	0		210

3500	1.27	0		206
3505	1.25	0		201
3510	1.22	0		195
3515	1.2	0		190
3520	1.16	0		187
3525	1.13	0		182
3530	1.11	0		177
3535	1.09	0		178
3540	1.07	0		172
3545	1.04	0		167
3550	1.02	0		165
3555	1	0		162
3560	0.98	0		161
3565	0.95	0		158
3570	0.93	0		155
3575	0.91	0		154
3580	0.88	0		152
3585	0.88	0		150
3590	3.97	3.09	21.46	271
3595	3.76	0		234
3600	3.56	0		232
3605	3.31	0		224
3610	3.13	0		218
3615	2.9	0		211
3620	2.49	0		281
3625	2.2	0		267
3630	1.9	0		282
3635	1.66	0		270
3640	5.58	3.92	21.46	294
3645	1.25	0		274
3650	1.13	0		261
3655	1	0		244
3660	5.03	4.03	21.46	230
3665	4.88	0		240
3670	4.69	0		245
3675	4.49	0		253
3680	4.29	0		258
3685	4.08	0		264
3690	3.85	0		273
3695	3.63	0		277
3700	3.38	0		286
3705	3.11	0		297
3710	2.81	0		308
3715	2.56	0		312
3720	2.29	0		325
3725	2.02	0		330
3730	1.79	0		323

3735	1.66	0		300
3740	1.56	0		280
3745	1.5	0		265
3750	1.45	0		254
3755	1.38	0		245
3760	1.36	0		235
3765	1.32	0		226
3770	1.29	0		219
3775	1.25	0		215
3780	1.22	0		207
3785	1.18	0		204
3790	1.13	0		198
3795	1.11	0		195
3800	1.07	0		189
3805	1.04	0		185
3810	1	0		185
3815	3.76	2.76	19.8	344
3820	3.49	0		322
3825	3.15	0		331
3830	2.83	0		331
3835	2.56	0		323
3840	2.29	0		322
3845	1.95	0		356
3850	1.61	0		345
3855	1.38	0		335
3860	1.22	0		319
3865	1.13	0		299
3870	1.09	0		290
3875	5.49	4.40	19.8	260
3880	5.31	0		258
3885	5.08	0		265
3890	4.85	0		274
3895	4.6	0		281
3900	4.29	0		295
3905	3.97	0		309
3910	3.61	0		324
3915	3.22	0		329
3920	2.86	0		333
3925	2.52	0		336
3930	2.22	0		334
3935	1.97	0		336
3940	1.86	0		315
3945	1.77	0		298
3950	1.7	0		289
3955	1.61	0		283
3960	1.56	0		276
3965	1.5	0		270

3970	1.43	0		263
3975	1.38	0		255
3980	1.34	0		250
3985	1.27	0		248
3990	1.22	0		242
3995	1.18	0		240
4000	1.13	0		237
4005	1.09	0		236
4010	3.88	2.79	21.34	261
4015	3.65	0		231
4020	3.24	0		280
4025	2.88	0		264
4030	2.56	0		248
4035	2.56	0		238
4040	1.95	0		277
4045	1.63	0		292
4050	1.32	0		313
4055	1.09	0		301
4060	0.93	0		293
4065	0.84	0		288
4070	0.77	0		277
4075	5.15	4.38	21.34	248
4080	4.99	0		254
4085	4.72	0		273
4090	4.47	0		285
4095	4.13	0		309
4100	3.76	0		324
4105	3.33	0		337
4110	2.93	0		339
4115	2.56	0		342
4120	2.2	0		341
4125	1.9	0		336
4130	1.7	0		329
4135	1.54	0		321
4140	1.41	0		314
4145	1.32	0		307
4150	1.25	0		295
4155	1.2	0		282
4160	1.13	0		275
4165	1.09	0		269
4170	1.04	0		262
4175	0.98	0		256
4180	0.93	0		253
4185	0.91	0		248
4190	0.86	0		244
4195	0.79	0		237
4200	0.77	0		235

12/11/2017

Omni Test Laboratory
13327 NE Airport Way
Portland, OR 97230 USA
503.643.3788

Dear Sebastian Button

Please see the attached procedures we use for our testing preburn.

Sincerely,

Peter Macleay
R&D Design Manager, VCG

DAN Whitcomb
11/30/17 R+D

Stove Intrepid IV

Vol= 1.30 cu. ft.
Load Weight 4.13 kg
Wood Length 13 in

	Low	Med. Low	Med. High	High
Control Setting	Closed	yellow MARK	Wide Open	Wide open
Kindling	4-4.5 (lb) kg	" (lb) kg	" (lb) kg	" (lb) kg
Pre-burn Load Size 6 in (2x4) (For all CAT Burns 14.1lbs)	NON-CAT (lb) kg 15.5	(lb) kg 15.5	(lb) kg 15.5	(lb) kg 15.5
Pre-Shutdown instructions	Leave doors cracked and damp open to burn pre-burn down to 10 lbs. Then close doors and damper and set Air For 1 hr + Pre-burn.			
Shutdown Weight	10, (lb) kg	10 (lb) kg	10 (lb) kg	10 (lb) kg
Post-Shutdown Instructions	Stir after the First 10 min's, then every 20 min's Intill Loading time.			
Loading Temp deg F	450° or less		500° or Less	
Results (NON-CAT)	Br-.91 EPA-.05 DT-103°	Br-1.06 EPA-.21 DT-103°	Br-1.39 EPA-.09 DT-124°	Br-1.46 EPA-.08 DT-83°
(CAT STEEL #3)	Br-.98 EPA-.12 DT-89°	Br-1.24 EPA-.17 DT-58°	Br-1.31 EPA-.35 DT-76°	Br-1.38 EPA-.36 DT-83°

" Before any leveling & Packing of coal load, I push some coals into space under back Refractory cover, then level and Pack. " (For all Burns)

NON-CAT (On Low burns, before loading, make sure there is not any unburnt fuel in fire-box)

Cat 1 (Closed) 15.5 lbs Pre-burn
Burn down to 10 lbs with damper open, doors cracked
Then close and set for 1 hr pre-burn
LOAD - Temp = 450° or less.
STir - 10 mins, 30 mins, 50, 70, 90, 115 Level & Pack coal bed. (It takes along time for temps to drop.)

CAT 2 (Mark on stove / Air box.) 15.5 lbs Pre-burn.
Burn down to 10 lbs with damper open, doors cracked,
Then close and set for 1 hr pre-burn.
STir - 10 mins, 30 mins 50 mins. 75 Level and pack coal bed, LOAD Temp - 460° or less.

CAT-3 Both set on high. (wide open) 15.5 lbs pre-burn
CAT-4 burn down to 10 lbs with damper open and doors cracked.
Then close and set for 1-hr pre-burn. STir 10 min's, 30 mins, 50 mins, 65 mins Level and Pack coal bed.
LOAD Temp [redacted] or less. 500 [redacted] -

CAT-Installed
All The SAme as above with diffrent pre-burn weights.

Low	[redacted] lbs	14 lbs	[redacted] less 450° or less
High	[redacted] lbs	14 lbs	526 or less
3	14 lbs	520 or less	4-4.5 lbs Kindling
2	14 lbs	450° or less	

Dan Whitcomb 11/30/17 R+D

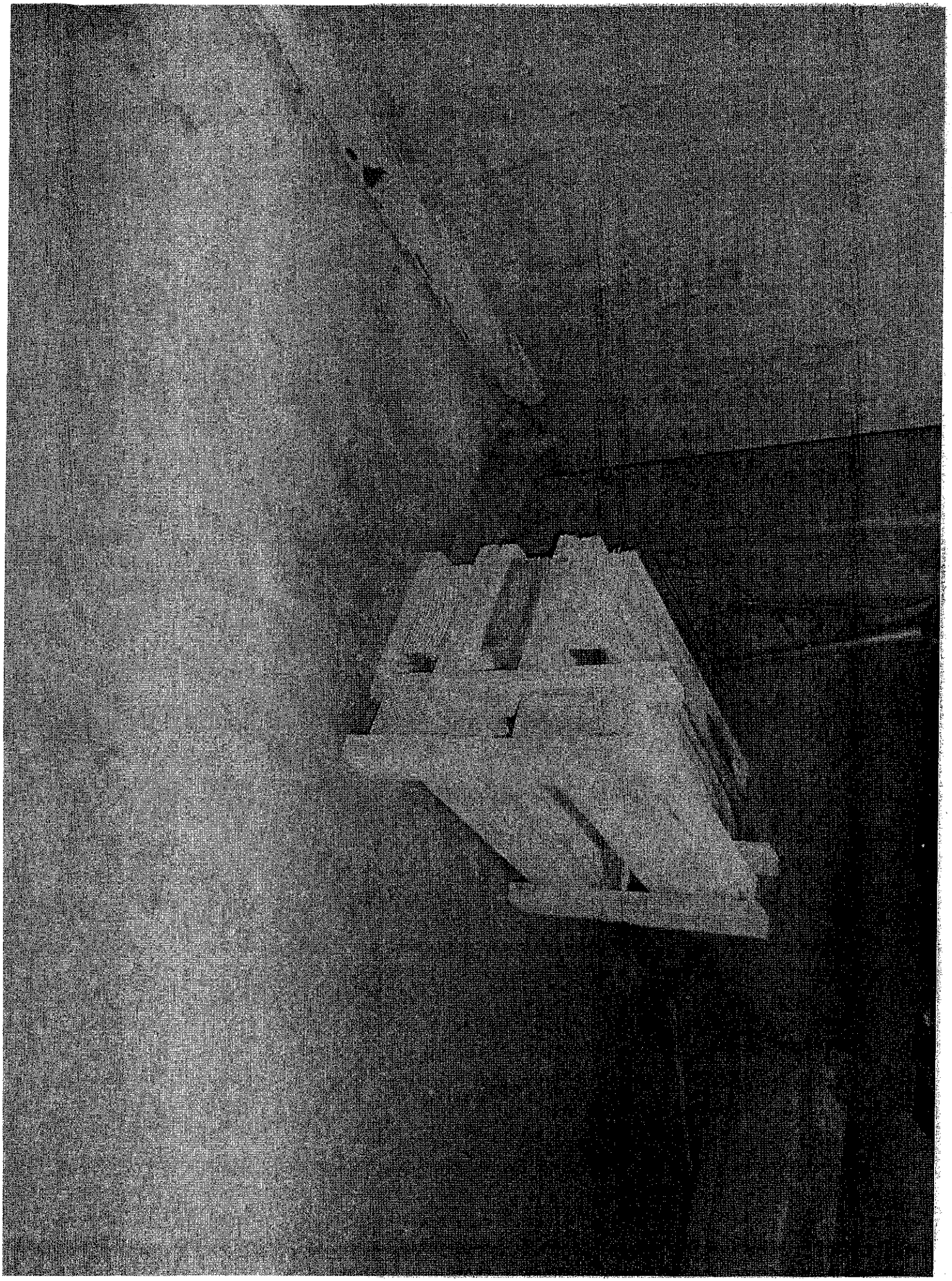

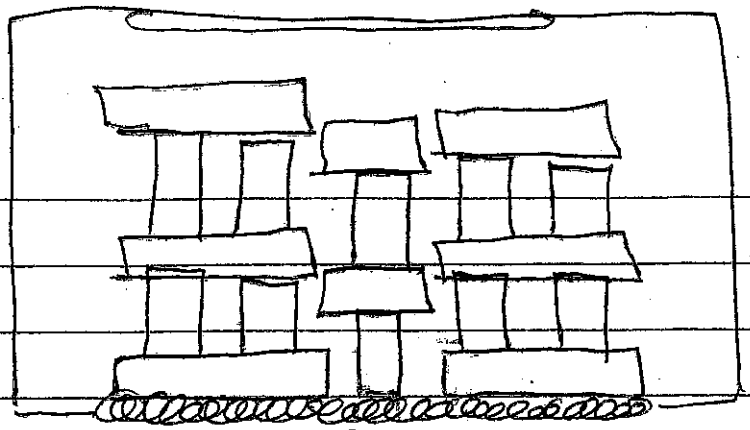

Front View of 2"x6" Pre-burn Conf.

Looking from front

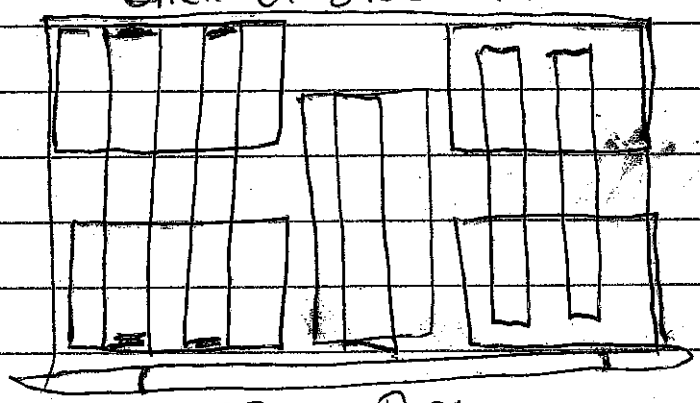

View from Top of Stove

4 2"x4"x6" one in each corner
Then 5 set on sides 2 on each side, one in center
Then one on each corner again the 2 on edge on each side + one lay down flat on middle 2x4 + so on.

(Should Take 18 to 23 pc's to get pre-burn weight.)

Dan Whitcomb
11/30/17
R+D

Run 1

Wood Heater Preburn Data - ASTM E2780

Run:	1

Technician Signature:_____

Manufacturer:	Hearth & Home
Model:	Intrepid IV
Tracking No.:	2264
Project No.:	0135WS038E
Test Date:	12/20/17
Beginning Clock Time:	9:56

Preburn Fuel Data

Fuel Piece Lengths (in.):	6
Total Preburn Weight (lb):	15..2
	21.53
uel Moisture Readings (% DB):	
Avg Preburn Moisture (% DB):	21.53

Coal Bed Range (lb):	1.7 (min)	2.1 (max)

			Temperatures (°F)							
Elapsed Time (min)	Scale (lb)	Stack Draft (in H_2O)	FB Top	FB Bottom	FB Back	FB Left	FB Right	Avg. FB	Stack	Ambient
0	9.8	-0.083	538	188	530	290	245	358.2	823	67
10	8.6	-0.049	473	244	650	324	267	391.6	356	67
20	7.3	-0.052	509	286	743	336	284	431.6	402	68
30	6.2	-0.05	536	307	782	341	308	454.8	393	69
40	4.5	-0.054	611	315	867	363	327	496.6	418	70
50	3.7	-0.045	570	317	846	395	343	494.2	371	70
60	3	-0.04	570	320	787	414	355	489.2	336	70
70	2.7	-0.035	534	324	698	415	365	467.2	307	71
80	2.4	-0.035	518	329	647	412	368	454.8	300	71
90	2.2	-0.032	517	332	614	408	374	449	295	71
100	2	-0.033	515	335	573	405	379	441.4	286	71

Wood Heater Test Fuel Data - ASTM E2780

Manufacturer:	**Hearth & Home**
Model:	**Intrepid IV**
Tracking No.:	**2264**
Project No.:	**0135WS038E**
Test Date:	**12/20/2017**
Run No.:	**1**

Firebox Volume (ft^3):	**1.31**
Fuel Piece Length (in):	**13.5**
2x4 Crib Weight (lb):	**8.4**
4x4 Crib Weight (lb):	**0**

Total Fuel Weight (Dry Basis, lb):	**7.0**	
Fuel Density (lb/ft^3, Dry Basis):	**25.82**	**OK**
Loading Density (lb/ft^3, Wet Basis):	**6.41**	**OK**
2x4 Percentage:	**N/A**	**N/A**

Coal Bed Range (20-25%): 1.68 - 2.1

Test Fuel Piece	Weight (lb)	Size	Readings (Dry Basis %)			Dry Weight (lb)
1	1.4	2"x 4"	22.4	22.4	22.5	1.14
2	1.1	2"x 4"	18.4	19.8	19.1	0.92
3	1.2	2"x 4"	19.2	19.2	19.4	1.01
4	1.3	2"x 4"	20.1	21.5	19.3	1.08
5	1.4	2"x 4"	22.6	22.3	22.8	1.14

Spacer Readings (Dry Basis %)			
17.4	18.6		
20.5	20.9		
19.7	11.3		
16.2	15.3		
16.9	15.7		
17.4			
20.8			
18.4			
16.2			
20.6			
20.4			
10.7			
18.2			

Technician Signature:_____

Wood Heater Test Data - ASTM E2780 / ASTM E2515

Run: 1

Manufacturer: Hearth & Home
Model: Intrepid IV
Tracking No.: 2264
Project No.: 0135WS038E
Test Date: 20-Dec-17
Beginning Clock Time: 11:38

Total Sampling Time: 200 min
Recording Interval: 10 min
Background Sample Volume: 0 cubic feet

Meter Box Y Factor: 0.981 (1) 0.984 (2) 1 (Amb)

Barometric Pressure:	Begin	Middle	End	Average
	30.31	30.3	30.34	30.32 "Hg

OMNI Equipment Numbers:

PM Control Modules: 335, 336
Dilution Tunnel MW(dry): 29.00 lb/lb-mole
Dilution Tunnel MW(wet): 28.78 lb/lb-mole
Dilution Tunnel H2O: 2.00 percent
Dilution Tunnel Static: -0.180 "H2O
Tunnel Area: 0.19635 ft2
Pitot Tube Cp: 0.99

Avg. Tunnel Velocity: 14.03 ft/sec.
Initial Tunnel Flow: 155.9 scfm
Average Tunnel Flow: 157.8 scfm
Post-Test Leak Check (1): 0.000 cfm @ 7 in. Hg
Post-Test Leak Check (2): 0.000 cfm @ 6 in. Hg
Average Test Piece Fuel Moisture: 20.73 Dry Basis %

Technician Signature:_____

Velocity Traverse Data	Pt.1	Pt.2	Pt.3	Pt.4	Pt.5	Pt.6	Pt.7	Pt.8	Center	
Initial dP	0.032	0.048	0.048	0.038	0.038	0.050	0.054	0.036	0.052	"H2O
Temp:	89	89	89	89	90	90	90	90	90	°F

V_{strav} 14.04 ft/sec V_{scent} 15.33 ft/sec F_p 0.916

	Particulate Sampling Data														Fuel Weight (lb)		Temperature Data (°F)													Stack Gas Data		
Elapsed Time (min)	Gas Meter 1 (ft^3)	Gas Meter 2 (ft^3)	Sample Rate 1 (cfm)	Sample Rate 2 (cfm)	Orifice dH 1 ("H_2O)	Meter 1 Temp (°F)	Meter 1 Vacuum ("Hg)	Orifice dH 2 ("H_2O)	Meter 2 Temp (°F)	Meter 2 Vacuum ("Hg)	Dilution Tunnel (°F)	Dilution Tunnel Center dP	Pro. Rate 1	Pro. Rate 2	Scale Reading	Weight Change	Firebox Top	Firebox Bottom	Firebox Back	Firebox Left	Firebox Right	Avg. Stove Surface	Firebox Interior	Stack	Filter 1	Dryer Exit 1	Filter 2	Dryer Exit 2	Ambient	Draft ("H_2O)	CO_2 (%)	CO (%)
0	0.000	0.000			1.35	73	-0.178	1.14	73	1	97	0.052			8.4		509	336	561	405	380	438	896	269	69	73	69	73	71	-0.026	4.26	0.11
10	1.598	1.607	0.16	0.16	1.35	73	-0.186	1.14	74	1.1	87	0.052	98	99	8.0	-0.4	368	333	569	383	366	404	1129	267	70	74	71	73	70	-0.034	7.66	0.04
20	3.228	3.230	0.16	0.16	1.35	75	-0.178	1.13	75	1.1	90	0.052	100	100	7.3	-0.7	407	325	615	349	336	406	1064	312	71	74	72	73	71	-0.041	7.72	1.07
30	4.860	4.856	0.16	0.16	1.35	77	-0.197	1.13	77	1.2	93	0.052	100	100	6.4	-0.9	495	316	640	328	319	420	1230	334	72	74	72	73	71	-0.043	9.96	0.04
40	6.499	6.494	0.16	0.16	1.35	78	-0.178	1.15	79	1.2	93	0.052	100	100	5.4	-1	548	308	715	319	310	440	1337	349	73	75	73	73	70	-0.045	10.77	0.03
50	8.142	8.141	0.16	0.16	1.36	79	-0.193	1.14	80	1.2	94	0.052	100	101	4.4	-1	562	302	772	321	310	453	1449	362	73	75	73	74	70	-0.048	11.86	0.07
60	9.785	9.786	0.16	0.16	1.37	80	-0.187	1.16	80	1.2	97	0.052	100	101	3.4	-1	611	299	847	337	322	483	1579	382	73	75	73	74	70	-0.051	13.5	0.55
70	11.433	11.435	0.16	0.16	1.36	80	-0.199	1.16	81	1.2	95	0.052	101	101	2.4	-1	630	297	876	359	342	501	1533	365	75	76	73	74	70	-0.052	12.16	0.3
80	13.080	13.086	0.16	0.17	1.36	80	-0.191	1.15	81	1.2	92	0.052	100	101	1.9	-0.5	640	298	797	375	359	494	1137	325	74	76	73	74	71	-0.041	6.12	0.17
90	14.732	14.737	0.17	0.17	1.36	81	-0.183	1.15	81	1.2	89	0.052	100	100	1.7	-0.2	571	302	681	380	370	461	919	296	73	75	73	74	70	-0.037	5.03	0.58
100	16.383	16.390	0.17	0.17	1.37	81	-0.188	1.16	82	1.2	88	0.052	100	100	1.5	-0.2	542	303	594	377	378	439	809	278	73	74	73	73	70	-0.032	4.95	0.79
110	18.037	18.044	0.17	0.17	1.37	81	-0.187	1.16	82	1.2	88	0.052	100	100	1.3	-0.2	521	302	536	371	383	423	736	270	72	73	72	73	70	-0.029	4.42	1.04
120	19.692	19.699	0.17	0.17	1.36	81	-0.191	1.16	81	1.2	88	0.052	100	101	1.2	-0.1	507	299	492	365	385	410	663	261	72	73	72	72	70	-0.028	3.69	1.52
130	21.345	21.352	0.17	0.17	1.37	81	-0.188	1.15	82	1.2	88	0.052	100	100	1.1	-0.1	490	294	452	358	380	395	601	249	72	72	72	72	70	-0.025	3.39	1.71
140	23.000	23.006	0.17	0.17	1.37	81	-0.181	1.16	82	1.2	86	0.052	100	100	0.9	-0.2	467	287	419	351	371	379	555	239	72	72	72	71	71	-0.024	2.95	1.86
150	24.653	24.657	0.17	0.17	1.37	81	-0.187	1.17	82	1.2	85	0.052	100	100	0.8	-0.1	447	279	391	343	359	364	514	229	72	72	72	71	71	-0.022	2.46	1.9
160	26.310	26.312	0.17	0.17	1.37	81	-0.196	1.16	82	1.2	85	0.052	100	100	0.7	-0.1	424	270	366	334	346	348	473	218	72	71	72	71	70	-0.021	2.08	1.65
170	27.966	27.953	0.17	0.16	1.37	82	-0.195	1.13	82	1.2	84	0.052	100	99	0.6	-0.1	419	262	347	325	332	337	482	214	72	71	72	71	71	-0.018	3.51	1.6
180	29.624	29.586	0.17	0.16	1.38	82	-0.191	1.13	82	1.2	84	0.052	100	99	0.4	-0.2	431	254	340	325	321	334	514	219	72	71	72	71	71	-0.019	4.24	1.4
190	31.282	31.218	0.17	0.16	1.39	82	-0.203	1.13	82	1.2	82	0.052	100	98	0.2	-0.2	445	250	350	325	316	337	588	227	72	71	72	71	70	-0.021	5.07	1.13
200	32.942	32.851	0.17	0.16	1.37	81	-0.215	1.13	82	1.2	82	0.052	100	98	0.0	-0.2	455	252	364	326	316	343	603	235	71	70	72	70	69	-0.023	4.83	1.19
Avg/Tot	32.942	32.851	0.17	0.16	1.36	80		1.15	80		89	0.052	100	100								95.6				73	72	72	70	-0.032		

Wood Heater Lab Data - ASTM E2780 / ASTM E2515

Manufacturer:	Hearth & Home	**Equipment Numbers:**	
Model:	Intrepid IV		
Tracking No.:	2264		
Project No.:	0135WS038E		
Run #:	1		
Date:	12/20/17		

TRAIN 1 (First Hour emissions)

Sample Component	Reagent	Filter, Probe or Dish #	Weights		
			Final, mg	Tare, mg	Particulate, mg
B. Front filter catch	Filter	D350	112.4	111.2	1.2
C. Rear filter catch	Filter				0.0
D. Probe catch*	Probe				0.0
E. Filter seals catch*	Seals				0.0

Sub-Total	Total Particulate, mg:	1.2

TRAIN 1 (Post First Hour Change-out)

Sample Component	Reagent	Filter, Probe or Dish #	Weights		
			Final, mg	Tare, mg	Particulate, mg
B. Front filter catch	Filter	D352	111.2	111.1	0.1
C. Rear filter catch	Filter	D351	111.5	111.4	0.1
D. Probe catch*	Probe	2	115015.3	115014.5	0.8
E. Filter seals catch*	Seals	R541	3542.3	3541.5	0.8

Sub-Total	Total Particulate, mg:	1.8
Train 1 Aggregate	Total Particulate, mg:	3.0

TRAIN 2

Sample Component	Reagent	Filter, Probe or Dish #	Weights		
			Final, mg	Tare, mg	Particulate, mg
A. Front filter catch	Filter	D353	111.9	111.2	0.7
B. Rear filter catch	Filter	D354	111.1	111.0	0.1
C. Probe catch*	Probe	3	116009.3	116008.4	0.9
D. Filter seals catch*	Seals	R542	3500.4	3499.0	1.4

	Total Particulate, mg:	3.1

AMBIENT

Sample Component	Reagent	Filter # or Probe #	Weights		
			Final, mg	Tare, mg	Particulate, mg
A. Front filter catch*	Filter	N/A			0.0

	Total Particulate, mg:	0.0

*Particulate catch that results in a negative number, is assumed to be zero for probes and seals, negative numbers for filters are assumed to be part of the seal weight.

Component	Equations:
A. Front filter catch	Final (mg) - Tare (mg) = Particulate, mg
B. Rear filter catch	Final (mg) - Tare (mg) = Particulate, mg
C. Probe catch	Final (mg) - Tare (mg) = Particulate, mg

Technician Signature:_____

Wood Heater Test Results - ASTM E2780 / ASTM E2515

Manufacturer: Hearth & Home
Model: Intrepid IV
Project No.: 0135WS038E
Tracking No.: 2264
Run: 1
Test Date: 12/20/17

Burn Rate	**0.95 kg/hr dry**
Average Tunnel Temperature	89 degrees Fahrenheit
Average Gas Velocity in Dilution Tunnel - vs	14.03 feet/second
Average Gas Flow Rate in Dilution Tunnel - Qsd	9465.3 dscf/hour
Average Delta p	0.052 inches H20
Total Time of Test	200 minutes

	AMBIENT	SAMPLE TRAIN 1	SAMPLE TRAIN 2	FIRST HOUR FILTER (TRAIN 1)
Total Sample Volume - Vm	0.000 cubic feet	32.942 cubic feet	32.851 cubic feet	9.785 cubic feet
Average Gas Meter Temperature	70 degrees Fahrenheit	80 degrees Fahrenheit	80 degrees Fahrenheit	80 degrees Fahrenheit
Total Sample Volume (Standard Conditions) - Vmstd	0.000 dscf	32.138 dscf	32.097 dscf	9.546 dscf
Total Particulates - m_n	0 mg	3 mg	3.1 mg	1.2 mg
Particulate Concentration (dry-standard) - C_r/C_s	0.000000 grams/dscf	0.00009 grams/dscf	0.00010 grams/dscf	0.00013 grams/dscf
Total Particulate Emissions - E_T	0.00 grams	2.95 grams	3.05 grams	1.19 grams
Particulate Emission Rate	0.00 grams/hour	0.88 grams/hour	0.91 grams/hour	1.19 grams/hour
Emissions Factor		0.93 g/kg	0.96 g/kg	0.63 g/kg
Difference from Average Total Particulate Emissions		0.05 grams	0.05 grams	
		Dual Train Comparison Results Are Acceptable		

FINAL AVERAGE RESULTS

Complete Test Run	
Total Particulate Emissions - E_T	3.00 grams
Particulate Emission Rate	**0.90 grams/hour**
Emissions Factor	0.94 grams/kg
First Hour Emissions	
Total Particulate Emissions - E_T	1.19 grams
Particulate Emission Rate	1.19 grams/hour
Emissions Factor	0.63 grams/kg
7.5% of Average Total Particulate Emissions	0.22 grams

QUALITY CHECKS

Filter Temps < 90 °F	OK
Filter Face Velocity (47 mm)	OK
Dryer Exit Temp < 80F	OK
Leakage Rate	OK
Ambient Temp (55-90°F)	OK
Negative Probe Weight Eval.	OK
Pro-Rate Variation	OK
Stove Surface ΔT	OK
Train Precesion 7.5%	1.70
Train Precision 0.5g/kg	0.03

Technician Signature: 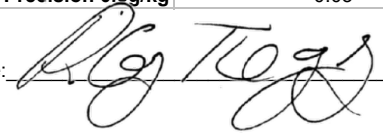

Wood Heater Efficiency Results - CSA B415.1

Manufacturer: Hearth & Home
Model: Intrepid IV
Date: 12/20/17
Run: 1
Control #: 0135WS038E
Test Duration: 200
Output Category: II

Technician Signature: _____

Test Results in Accordance with CSA B415.1-09

	HHV Basis	LHV Basis
Overall Efficiency	73.3%	79.2%
Combustion Efficiency	94.0%	94.0%
Heat Transfer Efficiency	78%	84.2%

Output Rate (kJ/h)	13,745	13,039	(Btu/h)
Burn Rate (kg/h)	0.95	2.09	(lb/h)
Input (kJ/h)	18,761	17,796	(Btu/h)

Test Load Weight (dry kg)	3.16	6.96	dry lb
MC wet (%)	17.17283269		
MC dry (%)	20.73		
Particulate (g)	0.90		
CO (g)	273		
Test Duration (h)	3.33		

Emissions	Particulate	CO
g/MJ Output	0.02	5.95
g/kg Dry Fuel	0.28	86.35
g/h	0.27	81.78
lb/MM Btu Output	0.05	13.83

Air/Fuel Ratio (A/F)	15.20

VERSION: 2.2 12/14/2009

OMNI-Test Laboratories, Inc. **ASTM E2780 Wood Heater Run Sheets**

Client: Hearth & Home Project Number: 0135WS038E Run Number: 1

Model: Intrepid IV Tracking Number: 2264 Date: 12/20/17

Test Crew: B Davis

OMNI Equipment ID numbers:

ASTM E2515 Lab Sheet

Assembled By:

B Davis

Date/Time in Dessicator:

12/21/17 0805

Weighing #1	Weighing #2	Weighing #3	Weighing #4	Weighing #5
Date/Time: 1/2/18 0820	Date/Time: 1/4/18 0830	Date/Time:	Date/Time:	Date/Time:
R/H %: 8.8	R/H %: 5.2	R/H %:	R/H %:	R/H %:
Temp: 69.6	Temp: 72.4	Temp:	Temp:	Temp:
200 mg Audit: 0.2000	200 mg Audit: 0.20000	200 mg Audit:	200 mg Audit:	200 mg Audit:
2 g Audit: 1.9998	2 g Audit: 1.9998	2 g Audit:	2 g Audit:	2 g Audit:
100 g Audit: 99.9978	100 g Audit 99.9978	100 g Audit	100 g Audit	100 g Audit
Initials: BR	Initials: BR	Initials:	Initials:	Initials:

Train	Element	ID #	Tare (mg)	Weight (mg)	Weight (mg)	Weight (mg)	Weight (mg)	Weight (mg)
A (First Hour)	Front Filter	D350	111.2	112.3	112.4 ✓			
	Rear Filter	N/A						
	Probe	N/A						
	O-Ring Set	N/A						
A (Remainder)	Front Filter	D352	111.1	111.3	111.2 ✓			
	Rear Filter	D351	111.4	111.4	111.5 ✓			
	Probe	2	115019.5	115015.1	115015.3 ✓			
	O-Ring Set	R541	3541.5	3542.1	3542.3 ✓			
B	Front Filter	D353	111.2 ~~111.8~~ 112	111.8	111.7 ✓			
	Rear Filter	D354	111.0	111.0	111.1 ✓			
	Probe	3	116004.4	116009.1	116009.3 ✓			
	O-Ring Set	R542	3499.0	3500.2	3500.4 ✓			
BG	Filter	NA						

Technician Signature: DC Date: 1/12/18

OMNI-Test Laboratories, Inc.

ASTM E2780 Wood Heater Run Sheets

Client: Hearth & Home Project Number: 0135WS038E Run Number: 1

Model: Intrepid IV Tracking Number: 2264 Date: 12/20/17

Test Crew: D Davis

OMNI Equipment ID numbers: 335, 336, 410, 296-TSB, 185, 132, 340, 431, 637, 283A, 594, 265, 567

Wood Heater Supplemental Data

Start Time: 11:38

Stop Time: ~~15:12~~ 14:58

Booth #: E1

Stack Gas Leak Check:

Initial: good Final: good

Sample Train Leak Check:

A: 0.0 @ 7" "Hg

B: 0.0 @ 6" "Hg

Calibrations: Span Gas CO_2: 16.74 CO: 4.20 / 901 ppm

	Pre Test		Post Test	
	Zero	Span	Zero	Span
Time	10:55	10:55	15:12	15:12
CO_2	0.00	16.74	0.00	16.71
CO	0 / 0.000	901 / 4.203	2.8 / 0.01	892 / 4.21

Air Velocity (ft/min): Initial: 250 Final: 250

Scale Audit (lbs): Initial: 10.0 Final: 10.0

Pitot Tube Leak Test: Initial: good Final: good

Stack Diameter (in): 6"

Induced Draft: 0.0

% Smoke Capture: 100%

Flue Pipe Cleaned Prior to First Test in Series:

Date: 12/19/17 Initials: DA

	Initial	Middle	Ending
P_b (in/Hg)	30.31	30.30	30.34
RH (%)	25.8	25.0	26.2
Ambient (°F)	71	70	69

Background Filter Volume: N/A

Tunnel Traverse		
Microtector Reading	dP (in H_2O)	T(°F)
1	.032	89
2	.048	89
3	.048	89
4	.038	89
1	.038	90
2	.050	90
3	.054	90
4	.036	90
Center:		
	.052	90

Tunnel Static Pressure (in H_2O):	
Beginning of Test	End of Test
-.18	-.19

Technician Signature: [signature]

Date: 1/12/18

OMNI-Test Laboratories, Inc. **ASTM E2780 Wood Heater Run Sheets**

Client: Hearth & Home Project Number: 0135WS038E Run Number: 1

Model: Intrepid IV Tracking Number: 2264 Date: 12/20/17

Test Crew: B Davis

OMNI Equipment ID numbers:

Wood Heater Fuel Data

Fuel: Douglas fir, untreated and air dried, standard grade or better dimensional lumber

Pre-Burn Fuel

Calibration: Cal Value (1) = 12% Actual Reading 12
Cal Value (2) = 22% Actual Reading 22

Piece:	Length:	Reading:	Piece:	Length:	Reading:
1	6 in	19.7	7	6 in	20.6
2	6 in	23.8	8	6 in	18.1
	5 ft	23.3		6"	19.8
3	6 in	22.4	9	6 in	23.0
4	6 in	21.9	10	6 in	19.0
5	6 in	22.6	11	6 in	23.8
6	6 in	21.9	12	in	

Total Pre-Burn Fuel Weight: 15.2 Pre-Burn Fuel Average Moisture: 21.53

Time (clock): 0940 Room Temperature (F): 70 Initials: BA

Test Fuel

Firebox Volume (ft³): 1.31 Test Fuel Piece Length (in): 13.5
Load Weight Range (lb): 8.25 - 9.17 - 10.08 Total Wet Fuel Load Weight (lb): 8.4

Fuel Type & Amount: 2 x 4: 5 4 x 4: Ø
Weight (with spacers): 8.4 Weight (with spacers): Ø

Piece:	Weight (lbs):	Moisture Readings (%DB):			Fuel Type:
1	1.4	22.4	22.4	22.5	2x4
2	1.1	18.4	19.8	19.1	2x4
3	1.2	19.2	19.2	19.4	2x4
4	1.3	20.1	21.5	19.3	2x4
5	1.4	22.6	22.3	22.8	2x4
6					
7					

Spacer Moisture Readings (%DB)

17.4	16.9	16.2	18.2	15.3			
20.5	17.4	20.6	18.6	15.7			
19.7	20.8	20.4	20.9				
16.2	18.4	10.7	11.3				

Technician Signature: 0950 Room Temperature (F): 70 Date: Initials: BA
Time (clock) 1/11/18

OMNI-Test Laboratories, Inc. **ASTM E2780 Wood Heater Run Sheets**

Client: Hearth & Home Project Number: 0135WS038E Run Number: 1

Model: Intrepid IV Tracking Number: 2264 Date: 12/20/17

Test Crew: B Davis

OMNI Equipment ID numbers:

Wood Heater Run Notes

Air Control Settings

Primary:

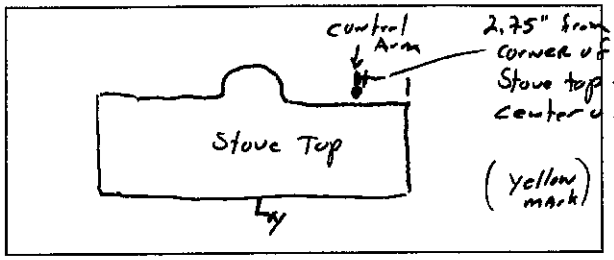

Secondary: fixed

Tertiary/Pilot: NA

Fan: NA

Preburn Notes

Time	Notes
10	Raked coals
30	Raked coals
50	Raked coals
70	Raked coals
101	Leveled coal bed

Test Notes

Sketch test fuel configuration:

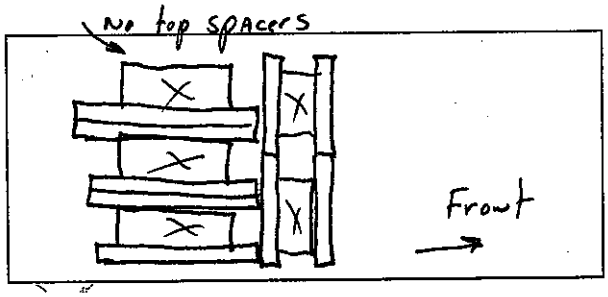

Start up procedures & Timeline:

Bypass: open until 1 minute
Fuel loaded by: 55 seconds
Door closed at: 58 seconds
Primary air: At test setting entire test

Notes: N/A

Time	Notes
60	Changed front filter in train A.

Technician Signature: B D

Date: 1/12/18

Run 2

Wood Heater Preburn Data - ASTM E2780

Run:	**2**

Technician Signature:

Manufacturer:	Hearth & Home
Model:	Intrepid IV
Tracking No.:	2264
Project No.:	0135WS038E
Test Date:	12/21/17
Beginning Clock Time:	7:53

Coal Bed Range (lb):	**1.8** (min)	**2.2** (max)

Preburn Fuel Data

Fuel Piece Lengths (in.):	6	
Total Preburn Weight (lb):	15.5	
Fuel Moisture Readings (% DB):	24.3	23.6
	19.4	22.5
	23.7	
	22.8	
	24.5	
Avg Preburn Moisture (% DB):	**22.97**	

			Temperatures (°F)							
Elapsed Time (min)	Scale (lb)	Stack Draft (in H_2O)	FB Top	FB Bottom	FB Back	FB Left	FB Right	Avg. FB	Stack	Ambient
0	9.9	-0.083	453	147	574	212	241	325.4	874	70
1	9.7	-0.075	454	153	613	217	252	337.8	622	70
2	9.6	-0.068	452	159	633	222	263	345.8	522	70
3	9.5	-0.064	447	165	642	226	274	350.8	466	70
4	9.4	-0.06	444	171	645	230	284	354.8	432	70
5	9.3	-0.058	441	177	644	235	293	358	410	70
6	9.2	-0.057	437	183	640	238	301	359.8	392	69
7	9.1	-0.054	434	189	634	241	308	361.2	379	70
8	9	-0.052	433	194	627	244	315	362.6	369	70
9	8.9	-0.05	431	200	620	247	321	363.8	360	70
10	8.9	-0.05	430	205	611	249	327	364.4	348	70
11	8.9	-0.095	421	210	602	252	331	363.2	385	70
12	8.5	-0.062	418	215	607	252	335	365.4	488	70
13	8.3	-0.059	422	220	628	254	339	372.6	442	70
14	8.2	-0.059	422	225	650	256	342	379	434	70
15	8	-0.06	422	229	673	257	346	385.4	436	70
16	7.8	-0.061	422	234	696	259	350	392.2	438	70
17	7.7	-0.059	424	238	716	260	353	398.2	435	70
18	7.6	-0.058	426	242	731	261	357	403.4	432	70
19	7.5	-0.057	431	246	744	263	360	408.8	429	70
20	7.4	-0.057	437	250	754	264	363	413.6	425	70
21	7.3	-0.057	448	255	763	266	365	419.4	424	70
22	7.1	-0.057	455	259	769	268	366	423.4	420	70
23	7	-0.057	466	263	773	270	368	428	421	70
24	6.9	-0.056	478	267	778	272	369	432.8	422	70
25	6.8	-0.058	493	270	783	275	370	438.2	422	70
26	6.7	-0.057	510	274	789	278	371	444.4	426	70
27	6.5	-0.057	525	278	796	281	372	450.4	427	70
28	6.4	-0.056	543	282	802	283	373	456.6	430	70
29	6.3	-0.057	556	286	807	287	374	462	431	70
30	6.2	-0.058	568	290	813	290	375	467.2	435	70
31	6.7	-0.164	571	293	811	294	376	469	722	70
32	5.6	-0.064	577	297	818	297	377	473.2	517	70
33	5.5	-0.063	586	301	825	301	381	478.8	468	70
34	5.3	-0.06	596	304	833	305	383	484.2	453	70
35	5.2	-0.059	608	306	842	309	386	490.2	449	70
36	5	-0.06	617	308	851	315	388	495.8	448	70
37	4.9	-0.06	627	310	860	320	390	501.4	446	70
38	4.7	-0.06	634	312	868	326	391	506.2	447	70

Wood Heater Preburn Data - ASTM E2780

Run:	**2**

Technician Signature:

Manufacturer:	Hearth & Home
Model:	Intrepid IV
Tracking No.:	2264
Project No.:	0135WS038E
Test Date:	12/21/17
Beginning Clock Time:	7:53

Coal Bed Range (lb):	**1.8** (min)	**2.2** (max)

Preburn Fuel Data

Fuel Piece Lengths (in.):	6	
Total Preburn Weight (lb):	15.5	
Fuel Moisture Readings (% DB):	24.3	23.6
	19.4	22.5
	23.7	
	22.8	
	24.5	
Avg Preburn Moisture (% DB):	**22.97**	

			Temperatures (°F)							
Elapsed Time (min)	Scale (lb)	Stack Draft (in H_2O)	FB Top	FB Bottom	FB Back	FB Left	FB Right	Avg. FB	Stack	Ambient
39	4.6	-0.058	639	314	872	332	393	510	440	70
40	4.5	-0.057	645	316	875	338	394	513.6	435	70
41	4.4	-0.057	649	317	876	344	397	516.6	434	70
42	4.3	-0.057	648	319	877	350	398	518.4	431	70
43	4.2	-0.057	650	320	875	356	400	520.2	426	70
44	4	-0.056	649	321	873	363	402	521.6	422	69
45	4	-0.055	650	322	871	369	404	523.2	421	70
46	3.8	-0.056	654	323	868	375	405	525	419	70
47	3.8	-0.052	669	324	857	380	406	527.2	403	70
48	3.7	-0.051	678	324	841	385	408	527.2	389	70
49	3.6	-0.05	685	325	825	390	410	527	379	70
50	3.5	-0.048	692	326	807	394	412	526.2	369	70
51	3.4	-0.045	689	326	790	398	414	523.4	364	70
52	4.4	-0.083	682	326	774	402	417	520.2	397	70
53	3.2	-0.051	654	327	765	405	418	513.8	429	70
54	3.1	-0.049	642	328	762	409	419	512	394	70
55	3.1	-0.05	630	328	759	412	421	510	385	70
56	3	-0.048	617	329	758	414	421	507.8	381	70
57	2.9	-0.049	608	329	758	417	422	506.8	379	70
58	2.9	-0.049	602	329	757	419	422	505.8	376	70
59	2.8	-0.047	597	329	756	422	422	505.2	374	70
60	2.8	-0.046	592	330	753	424	423	504.4	369	70
61	2.7	-0.047	590	330	748	426	423	503.4	366	70
62	2.7	-0.046	587	331	743	428	422	502.2	366	70
63	2.6	-0.046	585	332	737	429	422	501	362	70
64	2.6	-0.045	584	333	731	431	422	500.2	361	70
65	2.6	-0.045	582	334	725	433	421	499	358	70
66	2.5	-0.044	579	335	718	434	421	497.4	352	70
67	2.5	-0.044	576	336	710	435	421	495.6	347	70
68	2.5	-0.044	575	337	702	436	420	494	347	70
69	2.4	-0.042	572	339	694	437	420	492.4	343	70
70	2.4	-0.042	569	340	686	437	419	490.2	343	70
71	2.4	-0.04	567	341	677	437	419	488.2	338	70
72	2.4	-0.041	566	343	669	438	418	486.8	336	70
73	2.3	-0.04	561	345	662	438	418	484.8	335	70
74	2.3	-0.04	559	346	654	438	417	482.8	333	70
75	2.3	-0.04	556	348	647	438	417	481.2	331	70
76	2.3	-0.039	554	350	640	438	416	479.6	329	70
77	2.2	-0.04	552	352	633	438	416	478.2	326	70

Wood Heater Preburn Data - ASTM E2780

Run:	**2**

Technician Signature:

Manufacturer:	Hearth & Home
Model:	Intrepid IV
Tracking No.:	2264
Project No.:	0135WS038E
Test Date:	12/21/17
Beginning Clock Time:	7:53

Coal Bed Range (lb):	**1.8** (min)	**2.2** (max)

Preburn Fuel Data

Fuel Piece Lengths (in.):	6	
Total Preburn Weight (lb):	15.5	
Fuel Moisture Readings (% DB):	24.3	23.6
	19.4	22.5
	23.7	
	22.8	
	24.5	
Avg Preburn Moisture (% DB):	**22.97**	

			Temperatures (°F)							
Elapsed Time (min)	Scale (lb)	Stack Draft (in H_2O)	FB Top	FB Bottom	FB Back	FB Left	FB Right	Avg. FB	Stack	Ambient
78	2.2	-0.038	548	354	627	438	415	476.4	325	70
79	2.2	-0.039	546	356	620	438	415	475	324	70
80	2.2	-0.038	544	358	614	438	414	473.6	321	70
81	2.1	-0.038	541	360	607	438	414	472	320	70
82	2.1	-0.038	539	362	601	437	413	470.4	318	70
83	2.1	-0.037	536	364	595	437	413	469	316	70

Wood Heater Test Fuel Data - ASTM E2780

Manufacturer:	Hearth & Home
Model:	Intrepid IV
Tracking No.:	2264
Project No.:	0135WS038E
Test Date:	12/21/2017
Run No.:	2

Firebox Volume (ft^3):	1.31
Fuel Piece Length (in):	13.5
2x4 Crib Weight (lb):	8.9
4x4 Crib Weight (lb):	0

Total Fuel Weight (Dry Basis, lb):	7.4	
Fuel Density (lb/ft^3, Dry Basis):	29.42	OK
Loading Density (lb/ft^3, Wet Basis):	6.79	OK
2x4 Percentage:	N/A	N/A

Coal Bed Range (20-25%): **1.78 - 2.225**

Test Fuel Piece	Weight (lb)	Size	Readings (Dry Basis %)			Dry Weight (lb)
1	1.5	2"x 4"	22.0	22.3	20.2	1.23
2	1.5	2"x 4"	21.6	22.0	20.6	1.24
3	1.5	2"x 4"	20.6	20.9	19.0	1.25
4	1.4	2"x 4"	22.3	20.8	22.5	1.15
5	1.4	2"x 4"	22.4	18.7	19.2	1.17

Spacer Readings (Dry Basis %)			
15.6	17.8		
21.3	22.6		
12.7	13.0		
21.3	20.1		
21.9	17.8		
20.6			
14.5			
20.9			
20.9			
19.1			
17.9			
21.1			
19.4			

Technician Signature: 

Wood Heater Test Data - ASTM E2780 / ASTM E2515

Run: 2

Manufacturer: Hearth & Home
Model: Intrepid IV
Tracking No.: 2264
Project No.: 0135WS038E
Test Date: 21-Dec-17
Beginning Clock Time: 09:18

Total Sampling Time: 169 min
Recording Interval: 1 min
Background Sample Volume: _____ cubic feet

Meter Box Y Factor: 0.981 (1) 0.984 (2) _____ (Amb)

Barometric Pressure:	Begin	Middle	End	Average
	30.50	30.49	30.48	30.49 "Hg

OMNI Equipment Numbers: _____

PM Control Modules: 335, 336
Dilution Tunnel MW(dry): 29.00 lb/lb-mole
Dilution Tunnel MW(wet): 28.78 lb/lb-mole
Dilution Tunnel H2O: 2.00 percent
Dilution Tunnel Static: -0.190 "H2O
Tunnel Area: 0.19635 ft2
Pitot Tube Cp: 0.99

Avg. Tunnel Velocity: 13.89 ft/sec.
Initial Tunnel Flow: 154.2 scfm
Average Tunnel Flow: 157.0 scfm
Post-Test Leak Check (1): 0.000 cfm @ 6 in. Hg
Post-Test Leak Check (2): 0.000 cfm @ 5 in. Hg
Average Test Piece Fuel Moisture: 21.01 Dry Basis %

Technician Signature: _____

Velocity Traverse Data	Pt.1	Pt.2	Pt.3	Pt.4	Pt.5	Pt.6	Pt.7	Pt.8	Center	
Initial dP	0.036	0.050	0.050	0.034	0.032	0.046	0.050	0.040	0.052	"H2O
Temp:	95	95	95	95	95	95	95	95	95	°F

V_{strav} 13.96 ft/sec V_{scent} 15.35 ft/sec F_p 0.909

	Particulate Sampling Data														Fuel Weight (lb)		Temperature Data (°F)													Stack Gas Data		
Elapsed Time (min)	Gas Meter 1 (ft^3)	Gas Meter 2 (ft^3)	Sample Rate 1 (cfm)	Sample Rate 2 (cfm)	Orifice dH 1 ("H_2O)	Meter 1 Temp (°F)	Meter 1 Vacuum ("Hg)	Orifice dH 2 ("H_2O)	Meter 2 Temp (°F)	Meter 2 Vacuum ("Hg)	Dilution Tunnel (°F)	Dilution Tunnel Center dP	Pro. Rate 1	Pro. Rate 2	Scale Reading	Weight Change	Firebox Top	Firebox Bottom	Firebox Back	Firebox Left	Firebox Right	Avg. Stove Surface	Firebox Internal	Stack	Filter 1	Dryer Exit 1	Filter 2	Dryer Exit 2	Ambient	Draft ("H_2O)	CO_2 (%)	CO (%)
0	0.000	0.000			1.34	73	1.81	0.91	74	1.1	105	0.052			8.9		531	367	583	437	412	466	878	292	69	75	70	75	70	-0.032	4.23	0.13
1	0.149	0.152	0.15	0.15	1.34	73	1.95	1.10	74	1.1	130	0.052	96	98	8.9	0	517	368	574	437	412	462	853	268	70	76	71	75	70	-0.039	1.03	0.17
2	0.311	0.311	0.16	0.16	1.34	74	1.96	1.10	74	1.1	98	0.052	102	100	8.8	-0.1	492	370	572	435	410	456	940	262	71	76	71	75	70	-0.033	6.05	0.06
3	0.473	0.471	0.16	0.16	1.34	74	1.95	1.10	74	1.1	94	0.052	101	100	8.7	-0.1	473	371	571	433	409	451	979	263	71	76	71	75	70	-0.035	6.47	0.07
4	0.634	0.629	0.16	0.16	1.33	74	1.95	1.10	74	1.1	93	0.052	100	99	8.7	0	455	371	572	431	407	447	1011	269	71	76	71	75	70	-0.035	6.59	0.08
5	0.795	0.788	0.16	0.16	1.33	74	1.95	1.10	75	1.1	92	0.052	100	99	8.6	-0.1	440	372	575	428	405	444	1032	275	71	76	71	75	69	-0.038	6.86	0.08
6	0.956	0.948	0.16	0.16	1.34	74	1.95	1.09	75	1.1	92	0.052	100	100	8.6	0	429	372	578	426	402	441	1042	281	71	76	71	75	69	-0.037	7.28	0.09
7	1.117	1.106	0.16	0.16	1.33	74	1.95	1.10	75	1.1	92	0.052	100	98	8.5	-0.1	422	372	582	422	399	439	1038	288	71	76	71	75	70	-0.039	6.99	0.26
8	1.278	1.265	0.16	0.16	1.33	74	1.95	1.10	75	1.1	92	0.052	100	99	8.4	-0.1	415	372	586	419	396	438	1046	297	71	76	71	75	69	-0.040	7.18	0.33
9	1.439	1.424	0.16	0.16	1.32	74	1.94	1.09	75	1.1	93	0.052	100	99	8.3	-0.1	413	372	590	416	393	437	1050	303	71	76	71	75	69	-0.041	7.52	0.38
10	1.599	1.583	0.16	0.16	1.33	74	1.95	1.09	75	1.1	93	0.052	100	99	8.2	-0.1	415	371	594	412	390	436	1033	310	71	76	71	75	69	-0.042	7.4	0.47
11	1.760	1.742	0.16	0.16	1.33	74	1.94	1.09	75	1.1	93	0.052	100	99	8.2	0	421	371	598	409	386	437	995	315	71	76	71	75	69	-0.042	7.37	0.78
12	1.921	1.900	0.16	0.16	1.32	74	1.94	1.14	75	1.2	93	0.052	100	99	8.1	-0.1	427	370	598	405	382	436	904	312	71	76	71	75	69	-0.042	5.9	1.44
13	2.081	2.062	0.16	0.16	1.32	74	1.94	1.14	75	1.2	93	0.052	100	101	8.0	-0.1	433	369	596	402	379	436	866	309	71	76	72	74	70	-0.043	5.64	1.44
14	2.241	2.225	0.16	0.16	1.32	75	1.94	1.13	75	1.2	93	0.052	100	102	7.9	-0.1	434	368	593	400	375	434	844	306	71	76	72	74	70	-0.042	5.54	1.53
15	2.402	2.387	0.16	0.16	1.32	75	1.94	1.13	75	1.2	93	0.052	100	101	7.8	-0.1	438	367	589	398	372	433	815	304	71	76	72	74	69	-0.042	5.53	1.85
16	2.563	2.548	0.16	0.16	1.31	75	1.94	1.13	76	1.2	93	0.052	100	100	7.7	-0.1	441	366	583	396	369	431	790	302	71	75	72	74	69	-0.042	5.42	1.79
17	2.723	2.710	0.16	0.16	1.31	75	1.94	1.13	76	1.2	94	0.052	100	101	7.6	-0.1	444	365	578	394	366	429	772	301	71	75	72	74	69	-0.040	5.36	1.82
18	2.883	2.873	0.16	0.16	1.32	75	1.95	1.13	76	1.2	93	0.052	100	101	7.5	-0.1	446	364	571	393	363	427	756	298	71	75	72	74	69	-0.041	5.45	1.75
19	3.043	3.035	0.16	0.16	1.32	75	1.93	1.13	76	1.2	93	0.052	100	101	7.4	-0.1	449	363	565	392	360	426	742	297	72	75	72	74	69	-0.040	5.49	1.65
20	3.204	3.196	0.16	0.16	1.31	75	1.94	1.13	76	1.2	94	0.052	100	100	7.3	-0.1	455	361	559	391	357	425	725	294	72	75	72	74	70	-0.041	5.71	1.69
21	3.364	3.358	0.16	0.16	1.31	75	1.94	1.14	76	1.2	93	0.052	100	101	7.2	-0.1	466	360	552	391	355	425	707	292	72	75	72	74	69	-0.039	5.77	1.9
22	3.528	3.520	0.16	0.16	1.38	76	2.02	1.13	76	1.2	92	0.052	102	101	7.1	-0.1	474	359	546	391	352	424	693	288	72	75	72	74	69	-0.038	5.68	1.66
23	3.693	3.682	0.17	0.16	1.38	76	2.03	1.12	76	1.2	93	0.052	103	101	7.0	-0.1	479	357	539	392	350	423	678	286	72	75	72	74	69	-0.039	5.76	1.65
24	3.857	3.843	0.16	0.16	1.38	76	2.01	1.13	77	1.2	92	0.052	102	100	6.9	-0.1	483	356	532	392	348	422	664	281	72	75	72	74	69	-0.038	5.53	1.54
25	4.022	4.005	0.17	0.16	1.39	76	2.02	1.13	77	1.2	92	0.052	102	101	6.8	-0.1	485	354	526	394	346	421	651	280	72	75	72	74	69	-0.037	5.44	1.39
26	4.186	4.168	0.16	0.16	1.38	76	2.02	1.13	77	1.2	92	0.052	102	101	6.7	-0.1	487	353	519	395	344	420	643	276	72	75	72	74	69	-0.036	5.43	1.36
27	4.351	4.329	0.17	0.16	1.39	76	2.01	1.13	77	1.2	91	0.052	102	100	6.6	-0.1	491	350	512	397	342	418	633	274	72	75	72	74	69	-0.037	5.41	1.38
28	4.515	4.491	0.16	0.16	1.39	76	2.02	1.13	77	1.2	91	0.052	102	100	6.6	0	492	349	506	399	340	417	626	271	72	75	72	74	69	-0.036	5.4	1.4
29	4.680	4.653	0.17	0.16	1.38	77	2.01	1.13	77	1.2	91	0.052	102	100	6.5	-0.1	495	347	500	402	339	417	619	269	72	75	72	74	68	-0.035	5.56	1.47
30	4.845	4.815	0.17	0.16	1.39	77	2.02	1.13	77	1.2	91	0.052	102	100	6.4	-0.1	496	346	494	404	337	415	614	268	72	75	72	74	68	-0.036	5.48	1.5
31	5.010	4.977	0.17	0.16	1.38	77	2.02	1.12	77	1.2	91	0.052	102	100	6.3	-0.1	497	344	488	406	336	414	609	266	72	75	72	74	69	-0.034	5.57	1.56
32	5.175	5.138	0.17	0.16	1.38	77	2.03	1.13	77	1.2	91	0.052	102	100	6.2	-0.1	498	343	483	408	335	413	604	265	72	75	72	74	69	-0.033	5.58	1.6
33	5.336	5.300	0.16	0.16	1.34	77	1.97	1.13	78	1.2	91	0.052	100	100	6.1	-0.1	500	341	479	410	333	413	602	263	72	75	72	74	69	-0.034	5.58	1.64
34	5.498	5.462	0.16	0.16	1.33	77	1.97	1.12	78	1.2	90	0.052	100	100	6.0	-0.1	501	339	473	412	332	411	599	261	72	75	72	74	69	-0.033	5.49	1.58
35	5.659	5.624	0.16	0.16	1.33	77	1.97	1.13	78	1.2	90	0.052	100	100	6.0	0	502	338	469	414	331	411	598	261	72	75	72	74	69	-0.032	5.62	1.62
36	5.821	5.786	0.16	0.16	1.34	77	1.97	1.13	78	1.2	89	0.052	100	100	5.9	-0.1	504	336	465	415	329	410	595	261	71	75	72	74	69	-0.033	5.7	1.59

Wood Heater Test Data - ASTM E2780 / ASTM E2515

Run: 2

Manufacturer: Hearth & Home
Model: Intrepid IV
Tracking No.: 2264
Project No.: 0135WS038E
Test Date: 21-Dec-17
Beginning Clock Time: 09:18

Total Sampling Time: 169 min
Recording Interval: 1 min
Background Sample Volume: _____ cubic feet

Meter Box Y Factor: 0.981 (1) 0.984 (2) _____ (Amb)

Barometric Pressure:	Begin	Middle	End	Average
	30.50	30.49	30.48	30.49 "Hg

OMNI Equipment Numbers: _____

PM Control Modules: 335, 336
Dilution Tunnel MW(dry): 29.00 lb/lb-mole
Dilution Tunnel MW(wet): 28.78 lb/lb-mole
Dilution Tunnel H2O: 2.00 percent
Dilution Tunnel Static: -0.190 "H2O
Tunnel Area: 0.19635 ft2
Pitot Tube Cp: 0.99

Avg. Tunnel Velocity: 13.89 ft/sec.
Initial Tunnel Flow: 154.2 scfm
Average Tunnel Flow: 157.0 scfm
Post-Test Leak Check (1): 0.000 cfm @ 6 in. Hg
Post-Test Leak Check (2): 0.000 cfm @ 5 in. Hg
Average Test Piece Fuel Moisture: 21.01 Dry Basis %

Technician Signature: _____

Velocity Traverse Data	Pt.1	Pt.2	Pt.3	Pt.4	Pt.5	Pt.6	Pt.7	Pt.8	Center	
Initial dP	0.036	0.050	0.050	0.034	0.032	0.046	0.050	0.040	0.052	"H2O
Temp:	95	95	95	95	95	95	95	95	95	°F

V_{strav} 13.96 ft/sec V_{scent} 15.35 ft/sec F_p 0.909

	Particulate Sampling Data														Fuel Weight (lb)		Temperature Data (°F)												Stack Gas Data		
Elapsed Time (min)	Gas Meter 1 (ft^3)	Gas Meter 2 (ft^3)	Sample Rate 1 (cfm)	Sample Rate 2 (cfm)	Orifice dH 1 ("H_2O)	Meter 1 Temp (°F)	Meter 1 Vacuum ("Hg)	Orifice dH 2 ("H_2O)	Meter 2 Temp (°F)	Meter 2 Vacuum ("Hg)	Dilution Tunnel (°F)	Dilution Tunnel Center dP	Pro. Rate 1	Pro. Rate 2	Scale Reading	Weight Change	Firebox Top	Firebox Bottom	Firebox Back	Firebox Left	Firebox Right	Avg. Stove Surface	Firebox Internal	Stack	Filter 1	Dryer Exit 1	Filter 2	Dryer Exit 2	Ambient	Draft ("H_2O)	CO_2 (%)	CO (%)
37	5.983	5.947	0.16	0.16	1.34	77	1.98	1.13	78	1.2	89	0.052	100	99	5.8	-0.1	506	335	461	416	328	409	594	259	71	75	72	74	69	-0.032	5.77	1.62
38	6.146	6.109	0.16	0.16	1.34	77	1.98	1.12	78	1.2	89	0.052	101	100	5.7	-0.1	508	333	457	418	327	409	592	258	71	75	72	74	69	-0.032	5.83	1.62
39	6.308	6.271	0.16	0.16	1.33	78	1.98	1.12	78	1.2	89	0.052	100	100	5.6	-0.1	510	331	454	419	327	408	591	257	71	75	72	73	69	-0.032	5.99	1.67
40	6.469	6.432	0.16	0.16	1.33	78	1.97	1.12	78	1.2	89	0.052	99	99	5.5	-0.1	513	329	450	420	326	408	590	257	71	75	72	73	69	-0.032	6.04	1.65
41	6.631	6.594	0.16	0.16	1.33	78	1.98	1.12	78	1.2	89	0.052	100	100	5.5	0	516	328	447	422	325	408	586	256	71	75	72	73	69	-0.031	6.25	1.73
42	6.792	6.756	0.16	0.16	1.34	78	1.99	1.12	78	1.2	89	0.052	99	100	5.4	-0.1	523	326	445	423	324	408	584	255	71	75	72	73	69	-0.033	6.23	1.74
43	6.955	6.917	0.16	0.16	1.34	78	1.98	1.12	78	1.2	89	0.052	101	99	5.3	-0.1	532	325	442	424	323	409	580	256	71	75	72	73	69	-0.031	6.5	1.82
44	7.117	7.077	0.16	0.16	1.33	78	1.99	1.12	79	1.2	89	0.052	100	99	5.2	-0.1	545	323	439	426	323	411	577	253	71	74	72	73	69	-0.031	6.78	2.17
45	7.278	7.239	0.16	0.16	1.33	78	1.99	1.12	79	1.2	89	0.052	99	100	5.0	-0.2	562	322	436	427	322	414	572	253	71	74	72	73	69	-0.031	6.87	2.15
46	7.439	7.401	0.16	0.16	1.32	78	2	1.11	79	1.2	89	0.052	99	100	4.9	-0.1	578	320	434	428	323	417	567	253	71	74	72	73	69	-0.030	7.01	1.92
47	7.601	7.561	0.16	0.16	1.33	78	2	1.11	79	1.2	89	0.052	100	99	4.8	-0.1	590	319	431	428	323	418	562	251	71	74	72	73	68	-0.031	6.94	1.67
48	7.763	7.722	0.16	0.16	1.33	78	2.01	1.14	79	1.2	89	0.052	100	99	4.7	-0.1	600	317	429	428	324	420	560	251	71	74	72	73	68	-0.031	6.82	1.56
49	7.924	7.885	0.16	0.16	1.32	78	2.01	1.13	79	1.2	89	0.052	99	101	4.6	-0.1	608	316	427	428	325	421	558	251	71	74	72	73	69	-0.030	6.94	1.6
50	8.085	8.048	0.16	0.16	1.32	78	2.01	1.13	79	1.2	89	0.052	99	101	4.5	-0.1	613	314	425	428	326	421	557	250	71	74	72	73	69	-0.030	6.85	1.57
51	8.246	8.209	0.16	0.16	1.32	79	2.01	1.13	79	1.2	88	0.052	99	99	4.4	-0.1	617	312	422	427	327	421	557	249	71	74	72	73	69	-0.030	6.82	1.68
52	8.407	8.371	0.16	0.16	1.32	79	2.01	1.13	79	1.2	88	0.052	99	100	4.3	-0.1	621	311	420	427	328	421	558	247	71	74	71	73	69	-0.030	6.8	1.67
53	8.569	8.534	0.16	0.16	1.32	79	2.01	1.13	79	1.2	88	0.052	100	100	4.2	-0.1	624	309	418	426	329	421	559	248	71	74	71	73	69	-0.029	6.92	1.78
54	8.731	8.697	0.16	0.16	1.32	79	2.02	1.13	79	1.3	88	0.052	100	100	4.1	-0.1	627	308	417	425	331	422	559	247	71	74	71	73	68	-0.030	6.91	1.83
55	8.891	8.858	0.16	0.16	1.32	79	2.03	1.12	79	1.3	88	0.052	98	99	4.0	-0.1	632	306	415	425	332	422	559	247	71	74	71	73	69	-0.029	6.88	1.84
56	9.052	9.019	0.16	0.16	1.32	79	2.03	1.12	79	1.3	88	0.052	99	99	3.9	-0.1	636	305	414	423	333	422	558	247	71	74	71	73	68	-0.029	7.01	1.88
57	9.213	9.181	0.16	0.16	1.32	79	2.03	1.13	79	1.3	88	0.052	99	100	3.8	-0.1	640	303	412	422	335	422	556	246	71	74	71	73	69	-0.029	6.92	1.93
58	9.375	9.344	0.16	0.16	1.31	79	2.04	1.12	79	1.3	88	0.052	100	100	3.7	-0.1	645	302	411	421	336	423	554	246	71	74	71	73	69	-0.028	6.85	1.89
59	9.537	9.506	0.16	0.16	1.35	79	2.08	1.15	79	1.3	88	0.052	100	100	3.6	-0.1	651	300	409	421	337	424	552	245	71	74	71	73	69	-0.029	6.78	1.84
60	9.700	9.669	0.16	0.16	1.34	79	2.08	1.14	79	1.3	88	0.052	100	100	3.5	-0.1	655	299	408	420	339	424	549	244	71	74	71	73	68	-0.028	6.69	1.84
61	9.866	9.833	0.17	0.16	1.39	79	1.98	1.15	79	1.3	88	0.052	102	101	3.5	0	655	298	406	419	341	424	549	244	72	74	71	73	69	-0.028	6.71	1.62
62	10.031	9.996	0.17	0.16	1.38	79	2	1.14	79	1.3	88	0.052	102	100	3.4	-0.1	656	296	405	418	342	423	550	243	73	74	71	73	69	-0.028	6.65	1.6
63	10.194	10.160	0.16	0.16	1.34	79	1.96	1.14	79	1.3	87	0.052	100	101	3.3	-0.1	655	295	404	418	344	423	552	245	73	74	71	73	69	-0.027	6.52	1.59
64	10.356	10.323	0.16	0.16	1.34	79	1.97	1.14	80	1.3	88	0.052	100	100	3.2	-0.1	654	293	403	417	345	422	558	243	73	74	71	73	69	-0.028	6.64	1.51
65	10.519	10.486	0.16	0.16	1.34	79	1.96	1.14	80	1.3	87	0.052	100	100	3.2	0	655	291	403	417	347	423	556	242	73	74	71	73	68	-0.027	6.52	1.54
66	10.682	10.649	0.16	0.16	1.34	79	1.96	1.15	80	1.3	87	0.052	100	100	3.1	-0.1	650	290	402	417	348	421	555	241	73	74	71	73	69	-0.027	6.45	1.54
67	10.845	10.812	0.16	0.16	1.34	79	1.96	1.14	80	1.3	87	0.052	100	100	3.0	-0.1	648	289	401	416	349	421	554	241	73	74	71	73	69	-0.027	6.41	1.52
68	11.007	10.976	0.16	0.16	1.33	79	1.96	1.14	80	1.3	87	0.052	100	101	3.0	0	650	288	400	416	350	421	554	242	73	74	71	73	69	-0.026	6.55	1.5
69	11.169	11.139	0.16	0.16	1.34	79	1.96	1.13	80	1.3	87	0.052	100	100	2.9	-0.1	654	287	399	417	350	421	554	240	73	74	71	72	69	-0.027	6.63	1.42
70	11.331	11.302	0.16	0.16	1.34	79	1.97	1.14	80	1.3	87	0.052	100	100	2.8	-0.1	654	285	399	417	350	421	554	240	72	74	71	72	68	-0.027	6.63	1.45
71	11.494	11.464	0.16	0.16	1.34	79	1.97	1.14	80	1.3	87	0.052	100	100	2.8	0	650	284	398	417	351	420	552	241	72	73	71	72	69	-0.026	6.64	1.44
72	11.657	11.627	0.16	0.16	1.34	79	1.97	1.14	80	1.3	87	0.052	100	100	2.7	-0.1	647	283	398	418	351	419	550	241	72	73	71	72	69	-0.026	6.55	1.37
73	11.820	11.791	0.16	0.16	1.34	79	1.97	1.13	80	1.3	87	0.052	100	101	2.6	-0.1	646	282	397	418	352	419	552	241	72	73	71	72	68	-0.027	6.52	1.3

Wood Heater Test Data - ASTM E2780 / ASTM E2515

Run: 2

Manufacturer: Hearth & Home
Model: Intrepid IV
Tracking No.: 2264
Project No.: 0135WS038E
Test Date: 21-Dec-17
Beginning Clock Time: 09:18

Total Sampling Time: 169 min
Recording Interval: 1 min
Background Sample Volume: _____ cubic feet

Meter Box Y Factor: 0.981 (1) 0.984 (2) _____ (Amb)

Barometric Pressure:	Begin	Middle	End	Average
	30.50	30.49	30.48	30.49 "Hg

OMNI Equipment Numbers: _____

PM Control Modules: 335, 336
Dilution Tunnel MW(dry): 29.00 lb/lb-mole
Dilution Tunnel MW(wet): 28.78 lb/lb-mole
Dilution Tunnel H2O: 2.00 percent
Dilution Tunnel Static: -0.190 "H2O
Tunnel Area: 0.19635 ft2
Pitot Tube Cp: 0.99

Avg. Tunnel Velocity: 13.89 ft/sec.
Initial Tunnel Flow: 154.2 scfm
Average Tunnel Flow: 157.0 scfm
Post-Test Leak Check (1): 0.000 cfm @ 6 in. Hg
Post-Test Leak Check (2): 0.000 cfm @ 5 in. Hg
Average Test Piece Fuel Moisture: 21.01 Dry Basis %

Technician Signature: _____

Velocity Traverse Data	Pt.1	Pt.2	Pt.3	Pt.4	Pt.5	Pt.6	Pt.7	Pt.8	Center	
Initial dP	0.036	0.050	0.050	0.034	0.032	0.046	0.050	0.040	0.052	"H2O
Temp:	95	95	95	95	95	95	95	95	95	°F

V_{strav} 13.96 ft/sec V_{scent} 15.35 ft/sec F_p 0.909

	Particulate Sampling Data														Fuel Weight (lb)		Temperature Data (°F)												Stack Gas Data		
Elapsed Time (min)	Gas Meter 1 (ft^3)	Gas Meter 2 (ft^3)	Sample Rate 1 (cfm)	Sample Rate 2 (cfm)	Orifice dH 1 ("H_2O)	Meter 1 Temp (°F)	Meter 1 Vacuum ("Hg)	Orifice dH 2 ("H_2O)	Meter 2 Temp (°F)	Meter 2 Vacuum ("Hg)	Dilution Tunnel (°F)	Dilution Tunnel Center dP	Pro. Rate 1	Pro. Rate 2	Scale Reading	Weight Change	Firebox Top	Firebox Bottom	Firebox Back	Firebox Left	Firebox Right	Avg. Stove Surface	Firebox Internal	Stack	Filter 1	Dryer Exit 1	Filter 2	Dryer Exit 2	Ambient	Draft ("H_2O)	CO_2 (%)	CO (%)
74	11.982	11.953	0.16	0.16	1.33	79	1.97	1.13	80	1.3	86	0.052	99	99	2.6	0	644	281	397	419	352	419	553	240	72	73	71	72	69	-0.027	6.55	1.27
75	12.144	12.115	0.16	0.16	1.34	79	1.98	1.13	80	1.3	87	0.052	100	100	2.5	-0.1	642	280	397	420	351	418	555	240	72	73	71	72	68	-0.026	6.64	1.24
76	12.306	12.278	0.16	0.16	1.33	80	1.98	1.13	80	1.3	87	0.052	99	100	2.5	0	640	279	396	421	352	418	558	240	72	73	71	72	68	-0.027	6.58	1.23
77	12.468	12.441	0.16	0.16	1.34	80	1.97	1.12	80	1.3	87	0.052	99	100	2.4	-0.1	638	278	396	422	351	417	562	242	72	73	71	72	68	-0.026	6.61	1.25
78	12.631	12.603	0.16	0.16	1.33	80	1.98	1.13	80	1.4	86	0.052	100	99	2.3	-0.1	633	277	396	423	351	416	565	241	72	73	71	72	68	-0.026	6.51	1.26
79	12.794	12.765	0.16	0.16	1.34	79	1.98	1.13	80	1.4	86	0.052	100	99	2.3	0	628	276	396	424	351	415	569	241	72	73	71	72	68	-0.027	6.47	1.23
80	12.956	12.927	0.16	0.16	1.33	80	1.98	1.13	80	1.3	87	0.052	99	100	2.2	-0.1	627	275	397	424	351	415	574	242	71	73	71	72	68	-0.026	6.51	1.19
81	13.118	13.090	0.16	0.16	1.33	80	1.98	1.13	80	1.4	87	0.052	99	100	2.2	0	625	274	397	425	351	414	578	242	71	73	71	72	69	-0.026	6.51	1.14
82	13.280	13.253	0.16	0.16	1.33	80	1.98	1.12	80	1.3	87	0.052	99	100	2.1	-0.1	627	273	397	426	350	415	583	242	71	73	71	72	69	-0.027	6.41	1.11
83	13.442	13.415	0.16	0.16	1.33	80	1.98	1.13	80	1.4	87	0.052	99	100	2.1	0	628	273	398	427	350	415	587	245	71	73	71	72	68	-0.026	6.43	1.05
84	13.604	13.577	0.16	0.16	1.33	80	1.98	1.13	80	1.4	87	0.052	99	100	2.1	0	630	272	399	427	350	416	591	246	71	73	71	72	69	-0.027	6.49	1.02
85	13.768	13.739	0.16	0.16	1.34	80	1.98	1.13	80	1.4	86	0.052	101	99	2.0	-0.1	632	271	400	428	349	416	594	246	71	73	71	72	67	-0.027	6.35	0.99
86	13.930	13.902	0.16	0.16	1.33	80	1.99	1.12	80	1.4	86	0.052	99	100	2.0	0	632	270	401	429	349	416	599	247	71	73	71	72	67	-0.028	6.32	0.97
87	14.092	14.064	0.16	0.16	1.33	80	1.99	1.12	80	1.3	86	0.052	99	99	2.0	0	632	270	401	428	349	416	603	246	71	73	70	72	67	-0.028	6.29	0.94
88	14.254	14.226	0.16	0.16	1.33	80	1.98	1.13	80	1.3	86	0.052	99	99	1.9	-0.1	632	270	402	428	348	416	609	249	71	72	70	72	67	-0.028	6.2	0.88
89	14.417	14.389	0.16	0.16	1.34	80	1.97	1.13	80	1.3	86	0.052	100	100	1.9	0	628	269	404	428	348	415	630	250	71	72	70	72	68	-0.028	6.36	0.93
90	14.579	14.552	0.16	0.16	1.34	80	1.98	1.13	80	1.3	87	0.052	99	100	1.9	0	624	269	406	428	347	415	666	253	71	72	70	71	68	-0.028	6.61	0.84
91	14.742	14.714	0.16	0.16	1.34	80	1.98	1.13	80	1.3	87	0.052	100	100	1.8	-0.1	618	268	408	427	347	414	677	258	71	72	70	71	68	-0.029	6.56	0.88
92	14.905	14.876	0.16	0.16	1.34	80	1.97	1.13	80	1.3	87	0.052	100	100	1.8	0	613	268	411	427	347	413	684	261	70	72	70	71	68	-0.028	6.48	0.89
93	15.067	15.039	0.16	0.16	1.33	80	1.98	1.13	80	1.4	87	0.052	99	100	1.8	0	607	268	413	426	347	412	690	262	70	72	70	71	68	-0.030	6.47	0.92
94	15.229	15.201	0.16	0.16	1.34	80	1.98	1.13	80	1.3	87	0.052	99	100	1.8	0	601	267	416	426	346	411	697	266	70	72	70	71	68	-0.030	6.45	0.87
95	15.392	15.365	0.16	0.16	1.33	80	1.97	1.13	80	1.3	88	0.052	100	101	1.7	-0.1	596	267	419	425	346	411	700	268	70	72	70	71	68	-0.030	6.42	0.94
96	15.554	15.527	0.16	0.16	1.34	80	1.98	1.12	80	1.3	88	0.052	99	100	1.7	0	593	267	422	424	346	410	706	269	70	72	70	71	68	-0.031	6.38	0.99
97	15.716	15.689	0.16	0.16	1.33	80	1.97	1.13	80	1.3	88	0.052	99	100	1.7	0	589	267	425	424	346	410	706	269	70	72	70	71	68	-0.030	6.22	0.96
98	15.879	15.851	0.16	0.16	1.34	80	1.98	1.14	80	1.3	88	0.052	100	100	1.6	-0.1	586	266	427	424	346	410	702	271	70	72	70	71	68	-0.031	6.11	0.95
99	16.042	16.014	0.16	0.16	1.33	80	1.98	1.13	80	1.4	88	0.052	100	100	1.6	0	583	266	430	423	346	410	700	271	70	72	70	71	68	-0.031	5.9	0.99
100	16.204	16.177	0.16	0.16	1.33	80	1.99	1.13	80	1.3	88	0.052	99	100	1.6	0	577	266	433	422	346	409	721	273	71	72	70	71	68	-0.031	6.83	0.97
101	16.366	16.339	0.16	0.16	1.34	80	1.98	1.13	80	1.3	88	0.052	99	100	1.6	0	572	266	435	421	346	408	733	274	71	71	70	71	68	-0.032	6.87	0.89
102	16.528	16.501	0.16	0.16	1.34	80	1.99	1.13	80	1.3	88	0.052	99	100	1.5	-0.1	569	266	438	421	346	408	735	277	71	71	70	71	68	-0.032	6.76	0.89
103	16.691	16.663	0.16	0.16	1.34	80	1.98	1.13	80	1.3	88	0.052	100	100	1.5	0	568	266	441	420	346	408	736	278	71	71	70	71	68	-0.033	6.67	0.85
104	16.854	16.827	0.16	0.16	1.34	80	1.98	1.13	80	1.3	89	0.052	100	101	1.5	0	567	267	443	420	346	409	743	279	71	71	70	71	68	-0.033	6.66	0.89
105	17.017	16.989	0.16	0.16	1.34	80	1.98	1.12	80	1.3	88	0.052	100	100	1.4	-0.1	566	267	446	420	345	409	763	279	71	71	70	71	68	-0.032	7.09	0.85
106	17.179	17.151	0.16	0.16	1.33	80	1.98	1.13	80	1.3	88	0.052	99	100	1.4	0	564	267	449	420	345	409	776	279	71	71	70	70	68	-0.032	7.1	0.76
107	17.341	17.314	0.16	0.16	1.34	80	1.98	1.13	80	1.3	88	0.052	99	100	1.4	0	563	267	452	419	346	409	780	281	71	71	70	70	68	-0.032	7.06	0.7
108	17.503	17.476	0.16	0.16	1.34	80	1.98	1.13	80	1.3	88	0.052	99	100	1.4	0	562	268	455	419	346	410	779	282	71	71	70	70	68	-0.033	6.91	0.76
109	17.665	17.639	0.16	0.16	1.34	80	1.98	1.12	80	1.3	89	0.052	100	100	1.3	-0.1	561	268	458	419	346	410	779	283	71	71	70	70	68	-0.032	6.78	0.78
110	17.828	17.801	0.16	0.16	1.34	80	1.98	1.13	80	1.3	89	0.052	100	100	1.3	0	560	269	460	419	346	411	778	284	71	71	70	70	68	-0.032	6.81	0.79

Wood Heater Test Data - ASTM E2780 / ASTM E2515

Run: 2

Manufacturer: Hearth & Home
Model: Intrepid IV
Tracking No.: 2264
Project No.: 0135WS038E
Test Date: 21-Dec-17
Beginning Clock Time: 09:18

Total Sampling Time: 169 min
Recording Interval: 1 min
Background Sample Volume: _____ cubic feet

Meter Box Y Factor: 0.981 (1) 0.984 (2) _____ (Amb)

Barometric Pressure:	Begin	Middle	End	Average
	30.50	30.49	30.48	30.49 "Hg

OMNI Equipment Numbers: _____

PM Control Modules: 335, 336
Dilution Tunnel MW(dry): 29.00 lb/lb-mole
Dilution Tunnel MW(wet): 28.78 lb/lb-mole
Dilution Tunnel H2O: 2.00 percent
Dilution Tunnel Static: -0.190 "H2O
Tunnel Area: 0.19635 ft2
Pitot Tube Cp: 0.99

Avg. Tunnel Velocity: 13.89 ft/sec.
Initial Tunnel Flow: 154.2 scfm
Average Tunnel Flow: 157.0 scfm
Post-Test Leak Check (1): 0.000 cfm @ 6 in. Hg
Post-Test Leak Check (2): 0.000 cfm @ 5 in. Hg
Average Test Piece Fuel Moisture: 21.01 Dry Basis %

Technician Signature: _____

Velocity Traverse Data	Pt.1	Pt.2	Pt.3	Pt.4	Pt.5	Pt.6	Pt.7	Pt.8	Center	
Initial dP	0.036	0.050	0.050	0.034	0.032	0.046	0.050	0.040	0.052	"H2O
Temp:	95	95	95	95	95	95	95	95	95	°F

V_{strav} 13.96 ft/sec V_{scent} 15.35 ft/sec F_p 0.909

	Particulate Sampling Data														Fuel Weight (lb)		Temperature Data (°F)												Stack Gas Data		
Elapsed Time (min)	Gas Meter 1 (ft^3)	Gas Meter 2 (ft^3)	Sample Rate 1 (cfm)	Sample Rate 2 (cfm)	Orifice dH 1 ("H_2O)	Meter 1 Temp (°F)	Meter 1 Vacuum ("Hg)	Orifice dH 2 ("H_2O)	Meter 2 Temp (°F)	Meter 2 Vacuum ("Hg)	Dilution Tunnel (°F)	Dilution Tunnel Center dP	Pro. Rate 1	Pro. Rate 2	Scale Reading	Weight Change	Firebox Top	Firebox Bottom	Firebox Back	Firebox Left	Firebox Right	Avg. Stove Surface	Firebox Internal	Stack	Filter 1	Dryer Exit 1	Filter 2	Dryer Exit 2	Ambient	Draft ("H_2O)	CO_2 (%)	CO (%)
111	17.991	17.963	0.16	0.16	1.34	80	1.98	1.13	80	1.3	89	0.052	100	100	1.3	0	558	269	462	419	346	411	777	284	71	71	70	70	68	-0.033	6.68	0.79
112	18.153	18.126	0.16	0.16	1.33	80	1.98	1.13	80	1.3	89	0.052	100	100	1.3	0	556	270	465	419	346	411	775	287	71	71	70	70	68	-0.033	6.65	0.78
113	18.315	18.289	0.16	0.16	1.33	80	1.98	1.13	80	1.3	89	0.052	100	100	1.2	-0.1	555	270	466	419	347	411	771	285	71	71	70	70	68	-0.033	6.48	0.8
114	18.477	18.451	0.16	0.16	1.33	80	1.98	1.12	80	1.3	89	0.052	100	100	1.2	0	554	271	468	420	347	412	767	285	71	71	70	70	68	-0.033	6.32	0.83
115	18.639	18.613	0.16	0.16	1.33	79	1.98	1.13	80	1.3	89	0.052	100	100	1.2	0	551	271	469	420	347	412	763	287	71	71	70	70	68	-0.033	6.33	0.85
116	18.802	18.775	0.16	0.16	1.33	80	1.98	1.13	80	1.3	89	0.052	100	100	1.1	-0.1	550	272	470	420	347	412	758	285	71	71	70	70	68	-0.034	6.27	0.86
117	18.965	18.938	0.16	0.16	1.34	80	1.98	1.13	80	1.3	89	0.052	100	100	1.1	0	548	273	471	420	348	412	756	285	71	71	71	70	68	-0.033	6.22	0.85
118	19.127	19.101	0.16	0.16	1.33	80	1.98	1.12	80	1.3	89	0.052	100	100	1.1	0	547	273	471	420	348	412	750	286	71	71	70	70	68	-0.034	6.07	0.88
119	19.289	19.263	0.16	0.16	1.33	80	1.98	1.13	80	1.3	89	0.052	100	100	1.1	0	546	274	472	420	348	412	743	286	71	71	71	70	68	-0.033	5.99	0.89
120	19.451	19.425	0.16	0.16	1.33	80	1.98	1.13	80	1.3	89	0.052	100	100	1.1	0	544	275	472	420	349	412	742	286	71	71	71	70	68	-0.033	6.07	0.93
121	19.613	19.588	0.16	0.16	1.34	80	1.98	1.13	80	1.3	89	0.052	100	100	1.0	-0.1	543	275	473	421	349	412	739	284	71	71	71	70	68	-0.033	5.98	0.94
122	19.776	19.750	0.16	0.16	1.34	80	1.98	1.13	80	1.3	90	0.052	100	100	1.0	0	541	276	473	421	349	412	735	284	71	71	71	70	68	-0.033	5.86	0.98
123	19.939	19.912	0.16	0.16	1.34	80	1.98	1.13	80	1.3	89	0.052	100	100	1.0	0	540	277	472	421	350	412	731	283	71	70	71	70	68	-0.034	5.77	0.99
124	20.101	20.075	0.16	0.16	1.34	80	1.98	1.13	80	1.3	89	0.052	100	100	1.0	0	538	277	472	421	350	412	725	282	71	70	71	70	68	-0.033	5.64	1.05
125	20.264	20.237	0.16	0.16	1.32	80	1.98	1.13	80	1.3	89	0.052	100	100	0.9	-0.1	536	278	471	421	351	411	720	282	71	70	71	70	68	-0.034	5.28	1.04
126	20.426	20.401	0.16	0.16	1.33	80	1.98	1.13	80	1.3	90	0.052	100	101	0.9	0	533	279	471	421	351	411	714	282	71	70	71	70	68	-0.033	5.2	1.08
127	20.588	20.563	0.16	0.16	1.34	80	1.98	1.13	80	1.3	89	0.052	100	100	0.9	0	531	279	470	421	351	410	711	280	71	70	71	70	68	-0.033	5.06	1.03
128	20.751	20.725	0.16	0.16	1.34	80	1.98	1.12	80	1.3	89	0.052	100	100	0.9	0	528	280	469	421	352	410	712	280	71	70	71	70	68	-0.033	5.25	1.01
129	20.913	20.887	0.16	0.16	1.34	80	1.98	1.13	80	1.3	90	0.052	100	100	0.9	0	526	280	468	420	352	409	710	279	71	70	71	70	68	-0.033	5.11	1.03
130	21.077	21.050	0.16	0.16	1.34	80	1.99	1.13	80	1.3	89	0.052	101	100	0.8	-0.1	523	281	467	420	352	409	707	280	71	70	71	70	68	-0.032	5.16	1.02
131	21.239	21.213	0.16	0.16	1.33	80	1.98	1.13	80	1.3	89	0.052	100	100	0.8	0	521	281	467	419	353	408	700	278	71	70	71	70	69	-0.033	5.05	1.04
132	21.401	21.375	0.16	0.16	1.33	80	1.98	1.13	80	1.3	89	0.052	100	100	0.8	0	519	282	466	419	353	408	693	278	71	70	71	70	68	-0.033	4.9	1.13
133	21.563	21.537	0.16	0.16	1.33	80	1.98	1.13	80	1.3	89	0.052	100	100	0.8	0	517	282	464	418	353	407	687	277	71	70	71	70	68	-0.032	4.8	1.15
134	21.726	21.700	0.16	0.16	1.33	80	1.99	1.13	80	1.3	89	0.052	100	100	0.8	0	515	282	463	417	353	406	686	275	71	70	71	70	68	-0.033	4.81	1.19
135	21.888	21.863	0.16	0.16	1.34	80	1.98	1.13	80	1.3	89	0.052	100	100	0.7	-0.1	514	283	462	417	353	406	689	275	71	70	71	70	68	-0.031	4.89	1.17
136	22.051	22.025	0.16	0.16	1.33	80	1.98	1.12	80	1.3	89	0.052	100	100	0.7	0	513	283	461	416	353	405	685	275	71	70	71	70	69	-0.033	4.86	1.18
137	22.214	22.187	0.16	0.16	1.34	80	1.98	1.13	80	1.3	89	0.052	100	100	0.7	0	511	283	460	415	353	404	680	275	71	70	71	70	68	-0.033	4.69	1.18
138	22.377	22.350	0.16	0.16	1.33	80	1.98	1.13	80	1.3	88	0.052	100	100	0.7	0	511	284	458	414	353	404	676	274	71	70	71	70	69	-0.032	4.67	1.2
139	22.539	22.513	0.16	0.16	1.33	80	1.98	1.13	80	1.3	89	0.052	100	100	0.7	0	510	284	457	413	354	404	672	272	71	70	71	70	68	-0.031	4.64	1.22
140	22.701	22.675	0.16	0.16	1.33	80	1.98	1.13	80	1.3	89	0.052	100	100	0.6	-0.1	509	284	455	412	354	403	664	273	71	70	71	70	68	-0.031	4.49	1.22
141	22.864	22.837	0.16	0.16	1.34	80	1.98	1.13	80	1.3	89	0.052	100	100	0.6	0	508	285	453	411	354	402	659	271	71	70	71	70	68	-0.033	4.24	1.21
142	23.026	23.000	0.16	0.16	1.33	80	1.98	1.13	80	1.3	88	0.052	99	100	0.6	0	507	285	452	410	354	402	652	272	71	70	71	70	68	-0.031	4.21	1.3
143	23.189	23.162	0.16	0.16	1.34	80	1.98	1.13	80	1.3	89	0.052	100	100	0.6	0	505	285	450	409	354	401	653	270	71	70	71	70	69	-0.031	3.95	1.25
144	23.352	23.326	0.16	0.16	1.33	80	1.98	1.13	80	1.3	88	0.052	100	101	0.6	0	502	285	449	408	354	400	669	272	71	70	71	70	68	-0.031	5.35	0.94
145	23.514	23.488	0.16	0.16	1.33	80	1.99	1.12	80	1.3	88	0.052	99	100	0.5	-0.1	500	286	448	406	354	399	669	271	71	70	71	70	68	-0.032	5.03	0.92
146	23.676	23.650	0.16	0.16	1.34	80	1.98	1.13	80	1.3	89	0.052	100	100	0.5	0	498	285	447	405	354	398	665	270	71	70	71	70	68	-0.031	4.89	0.96
147	23.838	23.813	0.16	0.16	1.34	80	1.98	1.13	80	1.3	89	0.052	100	100	0.5	0	497	286	446	404	353	397	659	269	71	70	71	70	68	-0.031	4.7	0.98

Wood Heater Test Data - ASTM E2780 / ASTM E2515

Run: 2

Manufacturer: Hearth & Home
Model: Intrepid IV
Tracking No.: 2264
Project No.: 0135WS038E
Test Date: 21-Dec-17
Beginning Clock Time: 09:18

Total Sampling Time: 169 min
Recording Interval: 1 min
Background Sample Volume: _____ cubic feet

Meter Box Y Factor: 0.981 (1) 0.984 (2) _____ (Amb)

Barometric Pressure:	Begin	Middle	End	Average
	30.50	30.49	30.48	30.49 "Hg

OMNI Equipment Numbers: _____

PM Control Modules: 335, 336
Dilution Tunnel MW(dry): 29.00 lb/lb-mole
Dilution Tunnel MW(wet): 28.78 lb/lb-mole
Dilution Tunnel H2O: 2.00 percent
Dilution Tunnel Static: -0.190 "H2O
Tunnel Area: 0.19635 ft2
Pitot Tube Cp: 0.99

Avg. Tunnel Velocity: 13.89 ft/sec.
Initial Tunnel Flow: 154.2 scfm
Average Tunnel Flow: 157.0 scfm
Post-Test Leak Check (1): 0.000 cfm @ 6 in. Hg
Post-Test Leak Check (2): 0.000 cfm @ 5 in. Hg
Average Test Piece Fuel Moisture: 21.01 Dry Basis %

Technician Signature: _____

Velocity Traverse Data	Pt.1	Pt.2	Pt.3	Pt.4	Pt.5	Pt.6	Pt.7	Pt.8	Center	
Initial dP	0.036	0.050	0.050	0.034	0.032	0.046	0.050	0.040	0.052	"H2O
Temp:	95	95	95	95	95	95	95	95	95	°F

V_{strav} 13.96 ft/sec V_{scent} 15.35 ft/sec F_p 0.909

	Particulate Sampling Data														Fuel Weight (lb)		Temperature Data (°F)													Stack Gas Data		
Elapsed Time (min)	Gas Meter 1 (ft^3)	Gas Meter 2 (ft^3)	Sample Rate 1 (cfm)	Sample Rate 2 (cfm)	Orifice dH 1 ("H_2O)	Meter 1 Temp (°F)	Meter 1 Vacuum ("Hg)	Orifice dH 2 ("H_2O)	Meter 2 Temp (°F)	Meter 2 Vacuum ("Hg)	Dilution Tunnel (°F)	Dilution Tunnel Center dP	Pro. Rate 1	Pro. Rate 2	Scale Reading	Weight Change	Firebox Top	Firebox Bottom	Firebox Back	Firebox Left	Firebox Right	Avg. Stove Surface	Firebox Internal	Stack	Filter 1	Dryer Exit 1	Filter 2	Dryer Exit 2	Ambient	Draft ("H_2O)	CO_2 (%)	CO (%)
148	24.001	23.975	0.16	0.16	1.34	80	1.98	1.13	80	1.3	89	0.052	100	100	0.5	0	496	286	445	404	353	397	654	270	71	70	71	70	68	-0.031	4.66	1.03
149	24.164	24.138	0.16	0.16	1.33	80	1.98	1.13	80	1.3	88	0.052	100	100	0.4	-0.1	495	286	443	402	353	396	650	269	71	70	71	70	68	-0.031	4.6	1.08
150	24.327	24.300	0.16	0.16	1.34	80	1.99	1.13	80	1.3	88	0.052	100	100	0.4	0	494	286	442	401	353	395	646	268	71	70	71	69	68	-0.031	4.45	1.08
151	24.489	24.462	0.16	0.16	1.33	80	1.98	1.13	80	1.3	88	0.052	99	100	0.4	0	494	286	441	400	353	395	641	267	71	70	71	69	68	-0.031	4.47	1.15
152	24.652	24.625	0.16	0.16	1.33	80	1.99	1.13	80	1.3	88	0.052	100	100	0.4	0	492	287	440	400	352	394	632	268	71	70	71	69	68	-0.030	4.26	1.18
153	24.814	24.789	0.16	0.16	1.33	80	1.99	1.13	80	1.3	88	0.052	99	101	0.4	0	491	287	438	399	351	393	625	266	71	70	71	69	68	-0.030	4	1.23
154	24.976	24.951	0.16	0.16	1.34	80	1.98	1.13	80	1.3	89	0.052	100	100	0.4	0	490	287	436	398	351	392	629	266	71	70	71	69	68	-0.030	4.25	1.32
155	25.139	25.113	0.16	0.16	1.34	80	1.98	1.13	80	1.3	88	0.052	100	100	0.3	-0.1	488	287	435	398	351	392	628	264	71	70	71	69	68	-0.031	4.29	1.29
156	25.302	25.276	0.16	0.16	1.33	80	1.98	1.13	80	1.3	88	0.052	100	100	0.3	0	486	287	433	397	350	391	624	264	71	70	71	69	68	-0.030	4.13	1.31
157	25.465	25.438	0.16	0.16	1.33	80	1.98	1.13	80	1.3	88	0.052	100	100	0.3	0	485	287	432	396	349	390	620	262	71	70	71	69	68	-0.029	4.11	1.31
158	25.627	25.601	0.16	0.16	1.33	80	1.98	1.13	80	1.3	88	0.052	99	100	0.3	0	483	287	431	395	349	389	616	262	71	70	71	69	68	-0.030	4.04	1.33
159	25.789	25.763	0.16	0.16	1.33	80	1.98	1.13	80	1.3	88	0.052	99	100	0.3	0	482	287	429	395	348	388	611	261	71	70	71	69	68	-0.030	3.93	1.32
160	25.951	25.925	0.16	0.16	1.34	80	1.98	1.13	80	1.3	88	0.052	99	100	0.2	-0.1	480	287	427	394	347	387	607	261	71	70	71	69	68	-0.029	3.95	1.34
161	26.114	26.088	0.16	0.16	1.34	80	1.98	1.13	80	1.3	88	0.052	100	100	0.2	0	479	288	426	393	347	387	607	259	71	70	71	69	68	-0.029	3.89	1.36
162	26.277	26.252	0.16	0.16	1.34	80	1.99	1.13	80	1.3	87	0.052	100	101	0.2	0	479	288	425	393	346	386	613	259	71	70	71	69	68	-0.029	4.46	1.15
163	26.441	26.414	0.16	0.16	1.34	80	1.98	1.13	80	1.3	87	0.052	101	100	0.2	0	479	288	423	392	345	385	612	258	71	70	71	69	68	-0.029	4.31	1.14
164	26.603	26.576	0.16	0.16	1.34	80	1.99	1.13	80	1.3	88	0.052	99	100	0.2	0	478	288	422	391	345	385	610	259	71	70	71	69	68	-0.030	4.31	1.17
165	26.766	26.739	0.16	0.16	1.33	80	1.98	1.13	80	1.3	87	0.052	100	100	0.1	-0.1	478	288	420	390	344	384	607	258	71	70	71	69	68	-0.029	4.26	1.17
166	26.929	26.902	0.16	0.16	1.34	80	1.98	1.13	80	1.3	87	0.052	100	100	0.1	0	477	288	419	390	343	383	603	259	71	70	71	69	68	-0.028	4.08	1.17
167	27.091	27.065	0.16	0.16	1.34	80	1.99	1.13	80	1.3	87	0.052	99	100	0.1	0	476	288	418	389	343	383	597	257	71	70	71	69	68	-0.029	4.08	1.2
168	27.254	27.227	0.16	0.16	1.34	80	1.98	1.13	80	1.3	87	0.052	100	100	0.0	-0.1	476	288	416	388	342	382	598	255	71	70	71	69	68	-0.029	4	1.23
169	27.417	27.389	0.16	0.16	1.34	80	1.99	1.13	80	1.3	87	0.052	100	100	0.0	0	475	288	415	388	341	381	601	256	71	70	71	69	68	-0.028	4.55	1.16
Avg/Tot	27.417	27.389	0.16	0.16	1.34	79		1.13	79		89	0.052	100	100								84.6				73	71	72	68	-0.032		

Wood Heater Lab Data - ASTM E2780 / ASTM E2515

Manufacturer: Hearth & Home
Model: Intrepid IV
Tracking No.: 2264
Project No.: 0135WS038E
Run #: 2
Date: 12/21/17

Equipment Numbers:

TRAIN 1 (First Hour emissions)

Sample Component	Reagent	Filter, Probe or Dish #	Weights		
			Final, mg	Tare, mg	Particulate, mg
B. Front filter catch	Filter	D355	162.2	111.2	51.0
C. Rear filter catch	Filter				0.0
D. Probe catch*	Probe				0.0
E. Filter seals catch*	Seals				0.0

Sub-Total Total Particulate, mg: 51.0

TRAIN 1 (Post First Hour Change-out)

Sample Component	Reagent	Filter, Probe or Dish #	Weights		
			Final, mg	Tare, mg	Particulate, mg
B. Front filter catch	Filter	D357	136.3	111.2	25.1
C. Rear filter catch	Filter	D356	111.6	110.8	0.8
D. Probe catch*	Probe	OES 3	114771.0	114768.3	2.7
E. Filter seals catch*	Seals	R543	3575.7	3574.5	1.2

Sub-Total Total Particulate, mg: 29.8

Train 1 Aggregate Total Particulate, mg: **80.8**

TRAIN 2

Sample Component	Reagent	Filter, Probe or Dish #	Weights		
			Final, mg	Tare, mg	Particulate, mg
A. Front filter catch	Filter	D358	190.5	110.6	79.9
B. Rear filter catch	Filter	D359	111.9	111.1	0.8
C. Probe catch*	Probe	OES 4	114148.1	114145.2	2.9
D. Filter seals catch*	Seals	R544	3530.5	3529.0	1.5

Total Particulate, mg: **85.1**

AMBIENT

Sample Component	Reagent	Filter # or Probe #	Weights		
			Final, mg	Tare, mg	Particulate, mg
A. Front filter catch*	Filter				0.0

Total Particulate, mg: **0.0**

*Particulate catch that results in a negative number, is assumed to be zero for probes and seals, negative numbers for filters are assumed to be part of the seal weight.

Component	Equations:
A. Front filter catch	Final (mg) - Tare (mg) = Particulate, mg
B. Rear filter catch	Final (mg) - Tare (mg) = Particulate, mg
C. Probe catch	Final (mg) - Tare (mg) = Particulate, mg

Technician Signature:

Wood Heater Test Results - ASTM E2780 / ASTM E2515

Manufacturer: Hearth & Home
Model: Intrepid IV
Project No.: 0135WS038E
Tracking No.: 2264
Run: 2
Test Date: 12/21/17

Burn Rate	**1.19 kg/hr dry**
Average Tunnel Temperature	89 degrees Fahrenheit
Average Gas Velocity in Dilution Tunnel - vs	13.89 feet/second
Average Gas Flow Rate in Dilution Tunnel - Qsd	9420.3 dscf/hour
Average Delta p	0.052 inches H20
Total Time of Test	169 minutes

	AMBIENT	SAMPLE TRAIN 1	SAMPLE TRAIN 2	FIRST HOUR FILTER (TRAIN 1)
Total Sample Volume - Vm	0.000 cubic feet	27.417 cubic feet	27.389 cubic feet	9.700 cubic feet
Average Gas Meter Temperature	68 degrees Fahrenheit	79 degrees Fahrenheit	79 degrees Fahrenheit	76 degrees Fahrenheit
Total Sample Volume (Standard Conditions) - Vmstd	0.000 dscf	26.944 dscf	26.971 dscf	9.572 dscf
Total Particulates - m_n	0 mg	80.8 mg	85.1 mg	51 mg
Particulate Concentration (dry-standard) - C_r/C_s	0.000000 grams/dscf	0.00300 grams/dscf	0.00316 grams/dscf	0.00533 grams/dscf
Total Particulate Emissions - E_T	0.00 grams	79.57 grams	83.72 grams	50.19 grams
Particulate Emission Rate	0.00 grams/hour	28.25 grams/hour	29.72 grams/hour	50.19 grams/hour
Emissions Factor		23.77 g/kg	25.01 g/kg	24.80 g/kg
Difference from Average Total Particulate Emissions		2.08 grams	2.08 grams	
	Dual Train Comparison Results Are Acceptable			

FINAL AVERAGE RESULTS

Complete Test Run	
Total Particulate Emissions - E_T	81.65 grams
Particulate Emission Rate	**28.99 grams/hour**
Emissions Factor	24.39 grams/kg
First Hour Emissions	
Total Particulate Emissions - E_T	50.19 grams
Particulate Emission Rate	50.19 grams/hour
Emissions Factor	24.80 grams/kg
7.5% of Average Total Particulate Emissions	6.12 grams

QUALITY CHECKS

Filter Temps < 90 °F	OK
Filter Face Velocity (47 mm)	OK
Dryer Exit Temp < 80F	OK
Leakage Rate	OK
Ambient Temp (55-90°F)	OK
Negative Probe Weight Eval.	OK
Pro-Rate Variation	OK
Stove Surface ΔT	OK

Technician Signature: _____

Wood Heater Efficiency Results - CSA B415.1

Manufacturer: Hearth & Home
Model: Intrepid IV
Date: 12/21/17
Run: 2
Control #: 0135WS038E
Test Duration: 169
Output Category: II

Technician Signature: 

Test Results in Accordance with CSA B415.1-09

	HHV Basis	LHV Basis
Overall Efficiency	65.5%	70.8%
Combustion Efficiency	85.6%	85.6%
Heat Transfer Efficiency	77%	82.7%

Output Rate (kJ/h)	15,380	14,590	**(Btu/h)**
Burn Rate (kg/h)	1.18	2.61	**(lb/h)**
Input (kJ/h)	23,470	22,264	**(Btu/h)**

Test Load Weight (dry kg)	3.34	7.35	**dry lb**
MC wet (%)	17.35992507		
MC dry (%)	21.01		
Particulate (g)	28.99		
CO (g)	671		
Test Duration (h)	2.82		

Emissions	**Particulate**	**CO**
g/MJ Output	0.67	15.49
g/kg Dry Fuel	8.69	201.11
g/h	10.29	238.27
lb/MM Btu Output	1.56	36.00

Air/Fuel Ratio (A/F)	15.31

VERSION: **2.2** **12/14/2009**

OMNI-Test Laboratories, Inc.

ASTM E2780 Wood Heater Run Sheets

Client: Hearth & Home Project Number: 0135WS038E Run Number: 2

Model: Intrepid IV Tracking Number: 2264 Date: 12/21/17

Test Crew: B Davis

OMNI Equipment ID numbers:

ASTM E2515 Lab Sheet

Assembled By:

Date/Time in Dessicator: 12/21/17 1600

	Weighing #1	Weighing #2	Weighing #3	Weighing #4	Weighing #5
	Date/Time: 1/2/18 0820	Date/Time: 1/4/18 0858	Date/Time: 1-5-18	Date/Time: 1/9/18 0940	Date/Time:
	R/H %: 8.8	R/H %: 5.2	R/H %: 9.3	R/H %: 8.9	R/H %:
	Temp: 69.6	Temp: 72.4	Temp: 70.6	Temp: 71.2	Temp:
	200 mg Audit: 0.2000	200 mg Audit: 0.2000	200 mg Audit: 0.1999	200 mg Audit: 0.2000	200 mg Audit:
	2 g Audit: 1.9998	2 g Audit: 1.9998	2 g Audit: 1.9999	2 g Audit: 2.0000	2 g Audit:
	100 g Audit: 99.9978	100 g Audit 99.9978	100 g Audit 99.9981	100 g Audit 99.9979	100 g Audit
	Initials: BL	Initials: BL	Initials: BL	Initials: BL	Initials:

Train	Element	ID #	Tare (mg)	Weight (mg)	Weight (mg)	Weight (mg)	Weight (mg)	Weight (mg)
A (First Hour)	Front Filter	D355	111.2	162.9	162.4	162.2	✓	
	Rear Filter							
	Probe							
	O-Ring Set							
A (Remainder)	Front Filter	D357	111.2	136.8	136.4	136.3	✓	
	Rear Filter	D356	110.8	111.6	111.6	✓		
	Probe	OES 3	114768.3	114770.8	114771.0	✓		
	O-Ring Set	R543	3574.5	3575.5	3575.7	✓		
B	Front Filter	D358	110.6	191.6	191.1	190.5	190.5	
	Rear Filter	D359	111.1	111.8	111.7	✓		
	Probe	OES4	114145.2	114147.4	114148.1	114148.1	✓	
	O-Ring Set	R544	3529.0	3530.3	3530.5	✓		
BG	Filter							

Technician Signature: Date: 1/10/17

OMNI-Test Laboratories, Inc. **ASTM E2780 Wood Heater Run Sheets**

Client: Hearth & Home Project Number: 0135WS038E Run Number: 2

Model: Intrepid IV Tracking Number: 2264 Date: 12/21/17

Test Crew: B Davis

OMNI Equipment ID numbers:

Wood Heater Supplemental Data

Start Time: ~~11:37~~ 0918 Booth #: E1

Stop Time: ~~12:07~~ ~~12:27~~ 12:07

Stack Gas Leak Check:

Initial: good Final: good

Sample Train Leak Check:

A: 0.0 @ 6 "Hg

B: 0.0 @ 5 "Hg

Calibrations: Span Gas CO_2: 16.74 CO: 4.20%, 901 ppm

	Pre Test		Post Test	
	Zero	Span	Zero	Span
Time	0855	0856	1226	1227
CO_2	0.00	16.74	-0.07	16.65
CO	0.000 / 0	4.226 / 900	-0.002 / 0	4.220 / 905

Air Velocity (ft/min): Initial: 450 Final: 450

Scale Audit (lbs): Initial: 10.0 Final: 10.0

Pitot Tube Leak Test: Initial: good Final: good

Stack Diameter (in): 6"

Induced Draft: 0.0

% Smoke Capture: 100%

Flue Pipe Cleaned Prior to First Test in Series:

Date: 12/19/17 Initials: AL

	Initial	Middle	Ending
P_b (in/Hg)	30.50	30.49	30.48
RH (%)	23.6	24.0	24.5
Ambient (°F)	70	69	68

Background Filter Volume: N/A

Tunnel Traverse		
Microtector Reading	dP (in H_2O)	T(°F)
1	.036	95
2	.050	95
3	.050	95
4	.034	95
1	.032	95
2	.046	95
3	.050	95
4	.040	95
Center:		
	.052	95

Tunnel Static Pressure (in H_2O):	
Beginning of Test	End of Test
-.19	-.19

Technician Signature: [signature] Date: 1/12/18

OMNI-Test Laboratories, Inc. **ASTM E2780 Wood Heater Run Sheets**

Client: Hearth & Home Project Number: 0135WS038E Run Number: 2

Model: Intrepid IV Tracking Number: 2264 Date: 12-21-17

Test Crew: B Davis

OMNI Equipment ID numbers:

Wood Heater Fuel Data

Fuel: Douglas fir, untreated and air dried, standard grade or better dimensional lumber

Pre-Burn Fuel

Calibration: Cal Value (1) = 12% Actual Reading 12
Cal Value (2) = 22% Actual Reading 22

Piece:	Length:	Reading:	Piece:	Length:	Reading:
1	36 in	24.3	7	in	
2	36 in	19.4	8	in	
	24 ft	23.7			
3	18 in	22.8	9	in	
4	10 in	24.5	10	in	
5	16 in	23.6	11	in	
6	16 in	22.5	12	in	

Total Pre-Burn Fuel Weight: 15.5 / 14.3 Pre-Burn Fuel Average Moisture: 22.97

Time (clock): 0715 Room Temperature (F): 65 Initials: BA

Test Fuel

Firebox Volume (ft³): 1.31 Test Fuel Piece Length (in): 13.5
Load Weight Range (lb): 8.25 - 9.17 - 10.08 Total Wet Fuel Load Weight (lb): 8.9
1.8 - 2.2

Fuel Type & Amount: 2 x 4: 5 4 x 4: 0
Weight (with spacers): 8.9 Weight (with spacers): N/A

Piece:	Weight (lbs):	Moisture Readings (%DB):			Fuel Type:
1	1.5	22.0	22.3	20.2	2x4
2	1.5	21.6	22.0	20.6	2x4
3	1.5	20.6	20.9	19.0	2x4
4	1.4	22.3	20.8	22.5	2x4
5	1.4	22.4	18.7	19.2	2x4
6					
7					

Spacer Moisture Readings (%DB)

15.6	21.9	20.9	19.4	20.1			
21.3	20.6	19.1	17.8	17.8			
12.7	14.5	17.9	22.6				
21.3	20.9	21.1	13.0				

Technician Signature: 10:20 Room Temperature (F): 70 Date: Initials: 1/21/17
Time (clock):

1/18/17

OMNI-Test Laboratories, Inc. **ASTM E2780 Wood Heater Run Sheets**

Client: Hearth & Home Project Number: 0135WS038E Run Number: 2

Model: Intrepid IV Tracking Number: 2264 Date: 12-21-17

Test Crew: B Davis

OMNI Equipment ID numbers:

Wood Heater Run Notes

Air Control Settings

Primary:

Fully open, Control Arm Pushed fully to the Left.

Secondary: Fixed

Tertiary/Pilot: N/A

Fan: N/A

Preburn Notes

Time	Notes
10	Raked coals
30	Raked coals
51	Raked coals
70	Raked coals
84	Leveled coal bed

Test Notes

Sketch test fuel configuration:

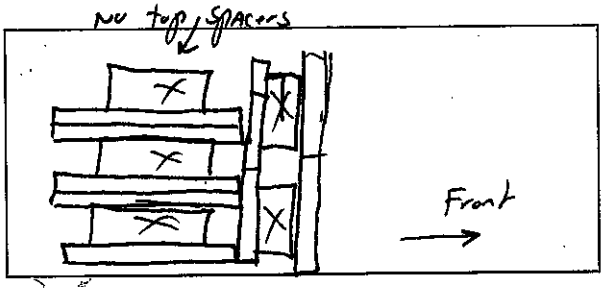

Start up procedures & Timeline:

Bypass: open until 55 seconds

Fuel loaded by: 50 seconds

Door closed at: 55 seconds

Primary air: at least setting entire test

Notes: N/A

Time	Notes
60	Changed filter in front of train A

Technician Signature: B D

Date: 1/3/18

Run 3

Wood Heater Preburn Data - ASTM E2780

Intrepid IV - KJM 2/12/18

Run:	3

Technician Signature:

Manufacturer:	Hearth & Home
Model:	~~Intrepid IV~~
Tracking No.:	2264
Project No.:	0135WS038E
Test Date:	12/21/17
Beginning Clock Time:	12:56

Coal Bed Range (lb):	1.7 (min)	2.1 (max)

Preburn Fuel Data

Fuel Piece Lengths (in.):	6
Total Preburn Weight (lb):	15.2
Fuel Moisture Readings (% DB):	22.6
	22.6
	23
	20.2
Avg Preburn Moisture (% DB):	22.10

			Temperatures (°F)							
Elapsed Time (min)	Scale (lb)	Stack Draft (in H_2O)	FB Top	FB Bottom	FB Back	FB Left	FB Right	Avg. FB	Stack	Ambient
0	9.9	-0.09	417	227	636	369	306	391	1009	69
1	9.7	-0.078	437	230	673	374	307	404.2	661	68
2	9.5	-0.071	440	233	691	378	309	410.2	532	69
3	9.5	-0.066	440	235	701	381	311	413.6	461	69
4	9.4	-0.063	437	238	705	385	314	415.8	421	69
5	9.3	-0.059	434	242	705	388	316	417	395	69
6	9.2	-0.058	431	245	703	391	318	417.6	380	69
7	9.1	-0.055	430	249	700	393	320	418.4	366	69
8	9.1	-0.054	427	252	695	395	321	418	358	70
9	9	-0.053	425	256	691	395	321	417.6	350	70
10	8.9	-0.051	425	259	687	396	322	417.8	347	70
11	8.8	-0.051	425	263	684	397	322	418.2	345	70
12	9.1	-0.052	424	267	682	397	322	418.4	345	70
13	8.6	-0.054	414	270	680	396	321	416.2	420	70
14	8.5	-0.054	414	274	692	395	321	419.2	385	70
15	8.4	-0.054	412	277	705	395	320	421.8	375	70
16	8.3	-0.053	409	280	717	394	320	424	371	70
17	8.1	-0.053	407	283	728	393	319	426	367	70
18	8.1	-0.052	407	286	739	392	318	428.4	366	70
19	8	-0.051	406	288	750	391	317	430.4	365	70
20	7.9	-0.051	406	291	760	389	316	432.4	364	70
21	7.8	-0.051	405	293	770	388	315	434.2	361	70
22	7.7	-0.049	406	296	777	386	313	435.6	360	70
23	7.6	-0.05	407	298	784	385	313	437.4	358	70
24	7.5	-0.05	407	301	789	384	312	438.6	355	70
25	7.4	-0.048	408	303	792	382	311	439.2	354	70
26	7.3	-0.05	409	306	794	381	310	440	352	70
27	7.3	-0.049	411	308	796	379	309	440.6	351	70
28	7.2	-0.048	412	311	796	379	308	441.2	347	70
29	7.1	-0.047	414	313	796	377	307	441.4	347	70
30	7	-0.048	416	315	795	376	307	441.8	344	70
31	6.8	-0.058	418	318	793	376	306	442.2	633	71
32	6.7	-0.055	423	321	803	375	306	445.6	453	71
33	6.5	-0.052	429	323	812	377	305	449.2	409	70
34	6.4	-0.053	434	325	821	378	305	452.6	389	70
35	6.3	-0.052	438	326	826	379	305	454.8	378	70
36	6.2	-0.052	439	328	830	381	305	456.6	372	71
37	6.2	-0.05	438	329	832	382	306	457.4	366	71
38	6.1	-0.05	438	331	834	384	305	458.4	365	71

Wood Heater Preburn Data - ASTM E2780

Intrepid IV - KJM 2/12/18

Run:	3

Technician Signature:

Manufacturer:	Hearth & Home
Model:	~~Intrepid IV~~
Tracking No.:	2264
Project No.:	0135WS038E
Test Date:	12/21/17
Beginning Clock Time:	12:56

Coal Bed Range (lb):	1.7 (min)	2.1 (max)

Preburn Fuel Data

Fuel Piece Lengths (in.):	6
Total Preburn Weight (lb):	15.2
Fuel Moisture Readings (% DB):	22.6
	22.6
	23
	20.2
Avg Preburn Moisture (% DB):	22.10

			Temperatures (°F)							
Elapsed Time (min)	Scale (lb)	Stack Draft (in H_2O)	FB Top	FB Bottom	FB Back	FB Left	FB Right	Avg. FB	Stack	Ambient
39	6	-0.049	438	332	834	384	306	458.8	361	70
40	5.9	-0.048	439	333	834	386	305	459.4	360	70
41	5.8	-0.047	439	335	832	388	306	460	357	71
42	5.8	-0.047	439	336	831	390	306	460.4	356	70
43	5.7	-0.047	441	337	827	392	306	460.6	352	71
44	5.6	-0.047	444	338	825	395	307	461.8	351	71
45	5.5	-0.047	445	340	821	397	307	462	347	70
46	5.5	-0.046	446	341	818	400	307	462.4	346	71
47	5.4	-0.046	448	342	814	403	308	463	345	71
48	5.3	-0.044	450	343	809	405	308	463	343	70
49	5.2	-0.044	452	344	805	408	308	463.4	340	71
50	5.2	-0.045	454	345	801	411	309	464	340	71
51	45.4	-0.117	456	346	792	413	309	463.2	406	70
52	4.9	-0.053	449	347	791	417	310	462.8	451	71
53	4.8	-0.052	456	348	798	420	311	466.6	391	71
54	4.7	-0.052	465	349	806	424	312	471.2	375	71
55	4.5	-0.052	476	349	816	426	313	476	369	71
56	4.4	-0.049	488	349	825	429	315	481.2	369	71
57	4.3	-0.05	499	349	834	431	316	485.8	366	71
58	4.3	-0.05	508	349	842	432	319	490	365	71
59	4.1	-0.049	512	349	850	433	321	493	363	71
60	4.1	-0.05	515	349	858	434	323	495.8	362	71
61	4	-0.049	520	349	864	434	325	498.4	366	71
62	3.9	-0.049	527	348	869	434	328	501.2	364	71
63	3.8	-0.049	528	347	874	433	331	502.6	361	71
64	3.7	-0.048	528	347	878	433	334	504	361	71
65	3.6	-0.047	527	347	879	433	338	504.8	358	71
66	3.5	-0.047	526	347	878	432	342	505	354	71
67	3.5	-0.045	527	347	875	432	345	505.2	351	71
68	3.4	-0.045	529	347	871	431	349	505.4	348	71
69	3.3	-0.045	531	347	866	430	352	505.2	346	71
70	3.3	-0.044	532	347	861	429	356	505	343	71
71	7.7	-0.093	535	347	853	429	361	505	411	70
72	3.1	-0.047	527	347	848	427	365	502.8	418	72
73	3	-0.045	537	347	847	427	368	505.2	370	72
74	3	-0.045	538	347	843	427	371	505.2	352	71
75	2.9	-0.044	533	347	838	426	373	503.4	342	71
76	2.9	-0.041	530	348	832	426	376	502.4	334	72
77	2.9	-0.042	528	348	825	426	378	501	329	71

Wood Heater Preburn Data - ASTM E2780

Intrepid IV - KJM 2/12/18

Run:	3

Technician Signature:

Manufacturer:	Hearth & Home
Model:	~~Intrepiod IV~~
Tracking No.:	2264
Project No.:	0135WS038E
Test Date:	12/21/17
Beginning Clock Time:	12:56

Coal Bed Range (lb):	1.7 (min)	2.1 (max)

Preburn Fuel Data

Fuel Piece Lengths (in.):	6
Total Preburn Weight (lb):	15.2
Fuel Moisture Readings (% DB):	22.6
	22.6
	23
	20.2
Avg Preburn Moisture (% DB):	22.10

			Temperatures (°F)							
Elapsed Time (min)	Scale (lb)	Stack Draft (in H_2O)	FB Top	FB Bottom	FB Back	FB Left	FB Right	Avg. FB	Stack	Ambient
78	2.8	-0.043	524	348	817	426	379	498.8	324	71
79	2.8	-0.04	521	349	808	426	380	496.8	321	71
80	2.8	-0.04	518	349	799	426	381	494.6	318	71
81	2.7	-0.04	515	349	789	426	382	492.2	315	71
82	2.7	-0.04	511	350	780	426	382	489.8	311	71
83	2.7	-0.039	509	350	769	426	382	487.2	309	71
84	2.7	-0.038	506	351	759	426	382	484.8	306	71
85	2.6	-0.038	504	351	749	426	382	482.4	302	71
86	2.6	-0.038	502	352	738	426	382	480	300	71
87	2.6	-0.036	499	352	728	425	381	477	297	71
88	2.6	-0.036	497	353	718	426	381	475	293	71
89	2.6	-0.035	494	354	708	425	380	472.2	291	71
90	2.6	-0.035	492	355	698	426	380	470.2	288	71
91	2.6	-0.034	490	355	688	425	380	467.6	287	70
92	5.3	-0.035	489	356	679	425	379	465.6	283	70
93	2.5	-0.035	484	357	670	424	378	462.6	321	71
94	2.5	-0.035	489	357	663	425	378	462.4	294	71
95	2.4	-0.033	492	358	657	424	378	461.8	285	71
96	2.4	-0.034	493	359	651	424	377	460.8	282	71
97	2.4	-0.034	495	359	646	424	377	460.2	280	71
98	2	-0.033	493	360	639	424	377	458.6	298	71
99	2	-0.033	494	360	634	423	377	457.6	281	71
100	2	-0.032	492	361	629	423	376	456.2	274	71
101	2	-0.031	492	362	623	422	375	454.8	270	71
102	2	-0.031	490	362	618	421	375	453.2	268	71
103	1.9	-0.031	488	363	613	421	375	452	267	71
104	1.9	-0.03	485	363	607	420	374	449.8	266	71
105	1.9	-0.029	483	364	602	419	373	448.2	265	71
106	1.9	-0.029	482	365	597	418	372	446.8	262	71
107	1.9	-0.029	480	365	591	417	372	445	263	71
108	1.9	-0.029	478	366	587	416	372	443.8	262	71
109	1.8	-0.03	477	367	582	415	371	442.4	260	71
110	1.8	-0.028	475	367	577	414	370	440.6	259	71
111	1.8	-0.028	473	367	573	412	370	439	257	71
112	1.8	-0.028	474	368	568	411	369	438	256	71
113	1.8	-0.028	473	369	564	410	368	436.8	253	71
114	1.8	-0.027	472	370	560	408	368	435.6	254	71
115	1.8	-0.06	471	370	555	408	367	434.2	271	71

Wood Heater Test Fuel Data - ASTM E2780

Manufacturer:	**Hearth & Home**
Model:	~~**Intrepid IV**~~ Intrepid IV - KJM 2/12/18
Tracking No.:	**2264**
Project No.:	**0135WS038E**
Test Date:	**12/21/2017**
Run No.:	**3**

Firebox Volume (ft^3):	**1.31**
Fuel Piece Length (in):	**13.5**
2x4 Crib Weight (lb):	**8.4**
4x4 Crib Weight (lb):	**0**

Total Fuel Weight (Dry Basis, lb):	**7.1**	
Fuel Density (lb/ft^3, Dry Basis):	**27.98**	**OK**
Loading Density (lb/ft^3, Wet Basis):	**6.41**	**OK**
2x4 Percentage:	**N/A**	**N/A**

Coal Bed Range (20-25%): 1.68 - 2.1

Test Fuel Piece	Weight (lb)	Size	Readings (Dry Basis %)			Dry Weight (lb)
1	1.3	2"x 4"	20.3	22.3	19.5	1.08
2	1.3	2"x 4"	21.5	19.8	19.0	1.08
3	1.5	2"x 4"	20.1	19.3	20.1	1.25
4	1.5	2"x 4"	20.6	19.5	20.3	1.25
5	1.3	2"x 4"	21.5	20.2	19.9	1.08

Spacer Readings (Dry Basis %)			
8.7	8.1		
8.3	11.2		
12.3	6.0		
9.2	9.8		
10.6	7.0		
7.9	7.8		
11.8			
10.6			
10.7			
8.6			
11.2			
9.4			
10.9			

Technician Signature: _____

Wood Heater Test Data - ASTM E2780 / ASTM E2515

Intrepid IV - KJM 2/12/18

Run: 3

Manufacturer: Hearth & Home
Model: ~~Intrepid IV~~
Tracking No.: 2264
Project No.: 0135WS038E
Test Date: 21-Dec-17
Beginning Clock Time: 14:51

Total Sampling Time: 216 min
Recording Interval: 1 min
Background Sample Volume: _____ cubic feet

Meter Box Y Factor: 0.981 (1) 0.984 (2) _____ (Amb)

Barometric Pressure:	Begin	Middle	End	Average
	30.41	30.41	30.4	30.41 "Hg

OMNI Equipment Numbers: _____

PM Control Modules: 0035, 0036
Dilution Tunnel MW(dry): 29.00 lb/lb-mole
Dilution Tunnel MW(wet): 28.78 lb/lb-mole
Dilution Tunnel H2O: 2.00 percent
Dilution Tunnel Static: -0.190 "H2O
Tunnel Area: 0.19635 ft2
Pitot Tube Cp: 0.99

Avg. Tunnel Velocity: 13.67 ft/sec.
Initial Tunnel Flow: 152.4 scfm
Average Tunnel Flow: 154.2 scfm
Post-Test Leak Check (1): 0.000 cfm @ 6 in. Hg
Post-Test Leak Check (2): 0.000 cfm @ 6 in. Hg
Average Test Piece Fuel Moisture: 20.26 Dry Basis %

Technician Signature: _____

Velocity Traverse Data	Pt.1	Pt.2	Pt.3	Pt.4	Pt.5	Pt.6	Pt.7	Pt.8	Center	
Initial dP	0.030	0.046	0.050	0.044	0.030	0.044	0.050	0.034	0.050	"H2O
Temp:	89	89	88	88	89	89	89	89	89	°F

V_{strav} 13.67 ft/sec V_{scent} 14.99 ft/sec F_p 0.912

	Particulate Sampling Data														Fuel Weight (lb)		Temperature Data (°F)													Stack Gas Data		
Elapsed Time (min)	Gas Meter 1 (ft^3)	Gas Meter 2 (ft^3)	Sample Rate 1 (cfm)	Sample Rate 2 (cfm)	Orifice dH 1 ("H_2O)	Meter 1 Temp (°F)	Meter 1 Vacuum ("Hg)	Orifice dH 2 ("H_2O)	Meter 2 Temp (°F)	Meter 2 Vacuum ("Hg)	Dilution Tunnel (°F)	Dilution Tunnel Center dP	Pro. Rate 1	Pro. Rate 2	Scale Reading	Weight Change	Firebox Top	Firebox Bottom	Firebox Back	Firebox Left	Firebox Right	Avg. Stove Surface	Firebox Internal	Stack	Filter 1	Dryer Exit 1	Filter 2	Dryer Exit 2	Ambient	Draft ("H_2O)	CO_2 (%)	CO (%)
0	0.000	0.000			1.34	74	1.85	1.12	75	1.1	96	0.050			8.4		469	371	552	406	366	433	893	255	70	75	70	75	71	-0.026	4.41	0.09
1	0.158	0.157	0.16	0.16	1.34	74	1.95	1.12	75	1.1	112	0.050	100	100	8.3	-0.1	457	371	546	406	366	429	927	247	70	76	71	75	71	-0.030	1.14	0.13
2	0.319	0.319	0.16	0.16	1.34	74	1.95	1.11	75	1.1	92	0.050	100	101	8.3	0	438	370	548	403	364	425	1011	248	71	76	71	75	71	-0.030	7.02	0.02
3	0.480	0.479	0.16	0.16	1.34	75	1.94	1.11	75	1.1	90	0.050	100	100	8.2	-0.1	423	370	551	401	363	422	1058	252	71	76	71	75	71	-0.031	7.9	0.02
4	0.642	0.639	0.16	0.16	1.33	74	1.94	1.11	75	1.1	89	0.050	101	100	8.2	0	410	369	556	399	362	419	1074	255	71	76	71	75	71	-0.033	7.46	0.02
5	0.804	0.800	0.16	0.16	1.33	75	1.94	1.10	75	1.1	89	0.050	100	100	8.1	-0.1	398	368	561	396	360	417	1098	260	71	76	71	75	71	-0.033	7.86	0.02
6	0.965	0.960	0.16	0.16	1.32	75	1.94	1.10	75	1.1	89	0.050	100	100	8.1	0	387	367	568	394	358	415	1125	264	71	76	71	75	71	-0.034	8.2	0.02
7	1.125	1.119	0.16	0.16	1.32	75	1.94	1.11	75	1.1	89	0.050	99	99	8.0	-0.1	379	366	575	391	356	413	1138	267	71	76	71	75	71	-0.035	8.33	0.02
8	1.285	1.280	0.16	0.16	1.32	75	1.94	1.11	75	1.1	89	0.050	99	100	7.9	-0.1	372	365	583	388	354	412	1162	271	71	76	71	75	71	-0.035	8.44	0.02
9	1.446	1.440	0.16	0.16	1.32	75	1.93	1.10	76	1.1	90	0.050	100	100	7.9	0	364	364	592	385	350	411	1187	276	71	76	71	75	71	-0.035	8.81	0.02
10	1.607	1.599	0.16	0.16	1.31	75	1.93	1.10	76	1.1	90	0.050	100	99	7.8	-0.1	362	363	601	381	348	411	1201	281	71	76	71	75	71	-0.037	8.69	0.02
11	1.767	1.759	0.16	0.16	1.31	75	1.93	1.10	76	1.1	90	0.050	99	100	7.7	-0.1	358	361	609	378	345	410	1176	285	71	76	72	75	71	-0.037	8	0.02
12	1.927	1.919	0.16	0.16	1.31	75	1.93	1.09	76	1.1	90	0.050	99	100	7.7	0	358	360	618	374	342	410	1177	287	71	76	72	75	71	-0.039	8	0.03
13	2.087	2.078	0.16	0.16	1.31	75	1.93	1.10	76	1.1	90	0.050	99	99	7.6	-0.1	358	359	625	371	340	411	1167	292	72	76	72	75	71	-0.039	7.74	0.05
14	2.248	2.239	0.16	0.16	1.33	75	1.96	1.13	76	1.2	91	0.050	100	100	7.5	-0.1	356	357	631	368	337	410	1179	296	72	76	72	75	71	-0.040	8.16	0.01
15	2.409	2.402	0.16	0.16	1.32	76	1.96	1.13	76	1.2	91	0.050	100	102	7.5	0	352	356	637	365	334	409	1157	300	72	76	72	75	71	-0.040	8.05	0.02
16	2.571	2.563	0.16	0.16	1.33	76	1.95	1.13	76	1.1	91	0.050	100	100	7.4	-0.1	349	354	642	362	331	408	1160	300	72	75	72	75	71	-0.041	7.71	0.03
17	2.732	2.725	0.16	0.16	1.33	76	1.95	1.13	76	1.1	90	0.050	100	101	7.3	-0.1	346	353	647	359	329	407	1195	301	72	75	72	75	71	-0.040	8.29	0.02
18	2.894	2.887	0.16	0.16	1.32	76	1.95	1.13	77	1.2	91	0.050	100	101	7.2	-0.1	345	351	651	356	327	406	1273	304	72	75	72	75	71	-0.041	9.34	0.01
19	3.055	3.049	0.16	0.16	1.33	76	1.95	1.13	77	1.2	92	0.050	100	101	7.1	-0.1	345	350	658	354	324	406	1292	308	72	75	72	75	71	-0.042	9.76	0.01
20	3.216	3.210	0.16	0.16	1.33	76	1.95	1.12	77	1.1	92	0.050	100	100	7.1	0	345	348	666	351	322	406	1308	312	72	75	72	75	71	-0.043	9.89	0.01
21	3.377	3.372	0.16	0.16	1.33	76	1.95	1.12	77	1.1	93	0.050	100	101	7.0	-0.1	345	347	675	348	320	407	1315	317	72	75	72	75	71	-0.043	9.85	0.01
22	3.538	3.534	0.16	0.16	1.33	77	1.94	1.13	77	1.2	92	0.050	100	101	6.9	-0.1	345	345	683	346	318	407	1309	319	72	75	72	75	71	-0.043	9.81	0.01
23	3.700	3.696	0.16	0.16	1.32	77	1.94	1.12	77	1.2	93	0.050	100	101	6.8	-0.1	347	344	691	343	315	408	1312	320	72	75	72	75	71	-0.044	9.63	0.01
24	3.861	3.857	0.16	0.16	1.32	77	1.95	1.13	77	1.2	93	0.050	100	100	6.7	-0.1	350	343	698	341	313	409	1313	323	72	75	73	75	71	-0.043	9.69	0.01
25	4.022	4.018	0.16	0.16	1.32	77	1.95	1.13	78	1.2	94	0.050	100	100	6.6	-0.1	353	341	706	339	311	410	1324	325	73	75	73	75	71	-0.044	9.74	0.01
26	4.183	4.181	0.16	0.16	1.33	77	1.94	1.12	78	1.2	94	0.050	100	102	6.5	-0.1	356	340	712	337	310	411	1339	325	73	75	73	75	71	-0.045	10.04	0.01
27	4.344	4.342	0.16	0.16	1.33	77	1.95	1.12	78	1.2	94	0.050	100	100	6.4	-0.1	360	338	720	335	308	412	1383	328	73	75	73	75	71	-0.045	10.68	0.02
28	4.506	4.503	0.16	0.16	1.32	77	1.95	1.12	78	1.2	94	0.050	100	100	6.3	-0.1	359	337	727	334	306	413	1359	331	73	75	73	75	71	-0.046	10.45	0.02
29	4.668	4.665	0.16	0.16	1.32	78	1.96	1.13	78	1.1	94	0.050	100	101	6.2	-0.1	361	336	733	332	305	413	1363	332	73	76	73	75	71	-0.046	10.3	0.02
30	4.829	4.827	0.16	0.16	1.33	78	1.95	1.12	78	1.2	94	0.050	100	101	6.1	-0.1	365	334	739	331	304	415	1375	333	73	76	73	75	71	-0.046	10.66	0.02
31	4.990	4.989	0.16	0.16	1.33	78	1.96	1.12	78	1.2	94	0.050	100	101	6.1	0	368	333	745	330	302	416	1376	334	73	76	73	75	71	-0.046	10.59	0.02
32	5.152	5.150	0.16	0.16	1.33	78	1.96	1.12	79	1.2	95	0.050	100	100	6.0	-0.1	373	332	751	329	301	417	1384	334	73	76	73	75	71	-0.046	10.49	0.02
33	5.315	5.312	0.16	0.16	1.33	78	1.96	1.12	79	1.2	94	0.050	101	101	5.9	-0.1	377	331	757	328	300	419	1431	338	73	76	73	75	71	-0.047	11.18	0.02
34	5.476	5.475	0.16	0.16	1.33	78	1.95	1.12	79	1.2	94	0.050	100	101	5.8	-0.1	386	329	764	327	299	421	1455	339	73	76	73	75	71	-0.047	11.42	0.02
35	5.638	5.636	0.16	0.16	1.33	78	1.96	1.12	79	1.2	94	0.050	100	100	5.7	-0.1	391	328	771	327	298	423	1451	341	73	76	73	75	71	-0.048	11.31	0.02
36	5.800	5.798	0.16	0.16	1.33	79	1.96	1.12	79	1.2	95	0.050	100	101	5.6	-0.1	395	327	778	327	297	425	1434	342	73	76	73	75	71	-0.046	11.01	0.09

Wood Heater Test Data - ASTM E2780 / ASTM E2515

Run: 3

Intrepid IV - KJM 2/12/18

Manufacturer: Hearth & Home
Model: ~~Intrepid IV~~
Tracking No.: 2264
Project No.: 0135WS038E
Test Date: 21-Dec-17
Beginning Clock Time: 14:51

Total Sampling Time: 216 min
Recording Interval: 1 min
Background Sample Volume: _____ cubic feet

Meter Box Y Factor: 0.981 (1) 0.984 (2) _____ (Amb)

Barometric Pressure:	Begin	Middle	End	Average
	30.41	30.41	30.4	30.41 "Hg

OMNI Equipment Numbers: _____

PM Control Modules: 0035, 0036
Dilution Tunnel MW(dry): 29.00 lb/lb-mole
Dilution Tunnel MW(wet): 28.78 lb/lb-mole
Dilution Tunnel H2O: 2.00 percent
Dilution Tunnel Static: -0.190 "H2O
Tunnel Area: 0.19635 ft2
Pitot Tube Cp: 0.99

Avg. Tunnel Velocity: 13.67 ft/sec.
Initial Tunnel Flow: 152.4 scfm
Average Tunnel Flow: 154.2 scfm
Post-Test Leak Check (1): 0.000 cfm @ 6 in. Hg
Post-Test Leak Check (2): 0.000 cfm @ 6 in. Hg
Average Test Piece Fuel Moisture: 20.26 Dry Basis %

Technician Signature: _____

Velocity Traverse Data	Pt.1	Pt.2	Pt.3	Pt.4	Pt.5	Pt.6	Pt.7	Pt.8	Center	
Initial dP	0.030	0.046	0.050	0.044	0.030	0.044	0.050	0.034	0.050	"H2O
Temp:	89	89	88	88	89	89	89	89	89	°F

V_{strav} 13.67 ft/sec V_{scent} 14.99 ft/sec F_p 0.912

	Particulate Sampling Data														Fuel Weight (lb)		Temperature Data (°F)													Stack Gas Data		
Elapsed Time (min)	Gas Meter 1 (ft^3)	Gas Meter 2 (ft^3)	Sample Rate 1 (cfm)	Sample Rate 2 (cfm)	Orifice dH 1 ("H_2O)	Meter 1 Temp (°F)	Meter 1 Vacuum ("Hg)	Orifice dH 2 ("H_2O)	Meter 2 Temp (°F)	Meter 2 Vacuum ("Hg)	Dilution Tunnel (°F)	Dilution Tunnel Center dP	Pro. Rate 1	Pro. Rate 2	Scale Reading	Weight Change	Firebox Top	Firebox Bottom	Firebox Back	Firebox Left	Firebox Right	Avg. Stove Surface	Firebox Internal	Stack	Filter 1	Dryer Exit 1	Filter 2	Dryer Exit 2	Ambient	Draft ("H_2O)	CO_2 (%)	CO (%)
37	5.961	5.959	0.16	0.16	1.33	79	1.96	1.12	79	1.2	96	0.050	100	100	5.5	-0.1	398	326	782	327	296	426	1416	341	73	76	73	75	71	-0.047	10.79	0.02
38	6.123	6.122	0.16	0.16	1.35	79	1.97	1.12	79	1.2	95	0.050	100	101	5.4	-0.1	399	325	786	327	295	426	1390	340	73	76	73	75	71	-0.046	10.53	0.02
39	6.287	6.283	0.16	0.16	1.34	79	1.97	1.12	79	1.2	96	0.050	102	100	5.3	-0.1	404	324	788	327	295	428	1387	340	73	76	73	75	71	-0.045	10.35	0.02
40	6.449	6.445	0.16	0.16	1.34	79	1.97	1.12	80	1.2	95	0.050	100	101	5.2	-0.1	409	323	791	328	294	429	1376	341	73	76	73	75	71	-0.046	10.11	0.02
41	6.612	6.607	0.16	0.16	1.34	79	1.97	1.12	80	1.2	96	0.050	101	101	5.2	0	415	322	791	329	294	430	1362	340	73	76	73	75	71	-0.046	10.04	0.02
42	6.775	6.769	0.16	0.16	1.34	79	1.98	1.12	80	1.2	95	0.050	101	101	5.1	-0.1	421	321	791	330	293	431	1354	341	73	76	73	75	71	-0.045	10.15	0.02
43	6.937	6.931	0.16	0.16	1.34	79	1.97	1.12	80	1.2	96	0.050	100	101	5.0	-0.1	428	321	791	331	293	433	1357	341	73	76	74	75	71	-0.046	10.23	0.02
44	7.100	7.093	0.16	0.16	1.35	79	1.97	1.12	80	1.2	96	0.050	101	101	4.9	-0.1	432	320	790	333	294	434	1352	339	74	76	74	75	71	-0.046	9.95	0.02
45	7.263	7.255	0.16	0.16	1.34	79	1.97	1.12	80	1.2	96	0.050	101	101	4.8	-0.1	432	319	790	335	293	434	1354	339	74	76	74	75	71	-0.046	10.33	0.02
46	7.426	7.417	0.16	0.16	1.34	80	1.97	1.12	80	1.2	95	0.050	101	101	4.7	-0.1	432	318	790	336	294	434	1350	336	74	76	74	75	72	-0.046	9.95	0.02
47	7.589	7.579	0.16	0.16	1.34	80	1.97	1.12	80	1.2	96	0.050	101	101	4.7	0	434	317	790	338	294	435	1348	336	74	76	74	75	72	-0.045	10.17	0.02
48	7.751	7.741	0.16	0.16	1.34	80	1.97	1.12	80	1.2	96	0.050	100	101	4.6	-0.1	435	317	789	340	294	435	1347	338	74	76	74	75	71	-0.045	10.19	0.02
49	7.914	7.903	0.16	0.16	1.34	80	1.97	1.12	80	1.2	97	0.050	101	101	4.5	-0.1	436	316	789	343	294	436	1351	340	74	76	74	75	71	-0.045	10.24	0.02
50	8.076	8.065	0.16	0.16	1.35	80	1.97	1.12	80	1.2	97	0.050	100	101	4.4	-0.1	437	315	788	345	295	436	1346	339	74	76	74	75	71	-0.045	10.39	0.02
51	8.240	8.227	0.16	0.16	1.34	80	1.98	1.12	81	1.2	97	0.050	101	101	4.4	0	439	314	788	348	295	437	1344	341	74	76	74	75	71	-0.045	10.42	0.02
52	8.403	8.389	0.16	0.16	1.34	80	1.97	1.12	81	1.2	96	0.050	101	101	4.3	-0.1	440	314	787	350	296	437	1337	338	74	76	74	75	71	-0.044	10.16	0.02
53	8.566	8.551	0.16	0.16	1.34	80	1.97	1.13	81	1.2	97	0.050	101	101	4.2	-0.1	441	313	787	353	296	438	1320	338	74	76	74	75	71	-0.045	9.86	0.02
54	8.729	8.713	0.16	0.16	1.34	80	1.98	1.13	81	1.2	97	0.050	101	101	4.1	-0.1	443	312	786	356	297	439	1323	337	74	76	74	75	71	-0.044	10	0.02
55	8.892	8.875	0.16	0.16	1.34	80	1.97	1.12	81	1.2	96	0.050	101	101	4.1	0	445	311	786	360	297	440	1318	337	74	76	74	75	71	-0.045	9.93	0.02
56	9.054	9.037	0.16	0.16	1.34	80	1.97	1.12	81	1.2	96	0.050	100	101	4.0	-0.1	446	311	784	363	298	440	1319	335	74	76	74	75	71	-0.045	9.71	0.02
57	9.217	9.199	0.16	0.16	1.34	81	1.97	1.13	81	1.2	96	0.050	101	101	3.9	-0.1	448	310	783	366	299	441	1313	336	74	76	74	75	71	-0.044	9.91	0.02
58	9.380	9.362	0.16	0.16	1.34	81	1.97	1.12	81	1.2	95	0.050	100	101	3.8	-0.1	448	310	783	370	300	442	1319	336	74	76	74	75	71	-0.044	9.83	0.02
59	9.543	9.524	0.16	0.16	1.35	81	1.97	1.12	81	1.2	96	0.050	101	101	3.8	0	451	309	782	373	300	443	1325	337	74	76	74	75	71	-0.044	10.13	0.02
60	9.707	9.686	0.16	0.16	1.34	81	1.98	1.12	81	1.2	95	0.050	101	100	3.7	-0.1	452	309	782	376	301	444	1334	337	74	76	74	75	71	-0.044	10.15	0.02
61	9.872	9.848	0.16	0.16	1.33	81	1.97	1.13	81	1.2	96	0.050	102	101	3.6	-0.1	454	308	782	380	302	445	1326	337	74	76	74	75	71	-0.044	10.31	0.02
62	10.035	10.010	0.16	0.16	1.34	81	1.98	1.13	81	1.2	96	0.050	101	101	3.6	0	457	308	782	383	303	447	1341	339	75	76	74	75	71	-0.044	10.58	0.02
63	10.199	10.174	0.16	0.16	1.34	81	1.98	1.12	81	1.2	96	0.050	101	102	3.5	-0.1	460	307	782	388	304	448	1338	339	75	76	74	75	70	-0.044	10.36	0.02
64	10.361	10.336	0.16	0.16	1.34	81	1.97	1.12	82	1.2	95	0.050	100	100	3.4	-0.1	464	307	783	393	305	450	1340	339	75	76	74	75	71	-0.045	10.39	0.02
65	10.524	10.498	0.16	0.16	1.35	81	1.98	1.13	82	1.2	96	0.050	101	100	3.3	-0.1	469	306	783	397	306	452	1330	339	75	76	74	75	71	-0.044	10.22	0.02
66	10.687	10.660	0.16	0.16	1.34	81	1.98	1.13	82	1.2	96	0.050	101	100	3.2	-0.1	476	306	784	402	307	455	1377	342	75	76	74	75	70	-0.045	10.92	0.02
67	10.851	10.823	0.16	0.16	1.35	81	1.98	1.13	82	1.2	96	0.050	101	101	3.2	0	486	306	788	408	308	459	1420	345	75	76	74	75	71	-0.046	12.29	0.13
68	11.014	10.986	0.16	0.16	1.35	81	1.98	1.13	82	1.2	96	0.050	101	101	3.1	-0.1	497	305	791	412	309	463	1396	347	75	76	74	75	71	-0.046	11.71	0.02
69	11.178	11.148	0.16	0.16	1.35	81	1.98	1.12	82	1.2	97	0.050	101	100	3.0	-0.1	508	305	795	415	310	467	1423	346	75	76	74	75	71	-0.045	11.56	0.02
70	11.341	11.310	0.16	0.16	1.34	81	1.98	1.13	82	1.2	96	0.050	101	100	2.9	-0.1	518	304	797	419	312	470	1400	347	75	76	74	75	71	-0.045	11.47	0.01
71	11.504	11.473	0.16	0.16	1.35	81	1.98	1.13	82	1.2	95	0.050	100	101	2.8	-0.1	529	303	799	421	313	473	1384	344	75	76	74	75	71	-0.045	11.05	0.01
72	11.668	11.636	0.16	0.16	1.34	81	1.98	1.13	82	1.2	96	0.050	101	101	2.8	0	541	303	800	423	315	476	1384	345	75	76	74	75	71	-0.047	11.23	0.01
73	11.831	11.799	0.16	0.16	1.34	81	1.99	1.12	82	1.2	96	0.050	101	101	2.7	-0.1	552	303	801	424	317	479	1388	344	75	76	74	75	71	-0.045	11.36	0.01

Wood Heater Test Data - ASTM E2780 / ASTM E2515

Run: 3

Intrepid IV - KJM 2/12/18

Manufacturer: Hearth & Home
Model: ~~Intrepid IV~~
Tracking No.: 2264
Project No.: 0135WS038E
Test Date: 21-Dec-17
Beginning Clock Time: 14:51

Total Sampling Time: 216 min
Recording Interval: 1 min
Background Sample Volume: _____ cubic feet

Meter Box Y Factor: 0.981 (1) 0.984 (2) _____ (Amb)

Barometric Pressure:	Begin	Middle	End	Average
	30.41	30.41	30.4	30.41 "Hg

OMNI Equipment Numbers: _____

PM Control Modules: 0035, 0036
Dilution Tunnel MW(dry): 29.00 lb/lb-mole
Dilution Tunnel MW(wet): 28.78 lb/lb-mole
Dilution Tunnel H2O: 2.00 percent
Dilution Tunnel Static: -0.190 "H2O
Tunnel Area: 0.19635 ft2
Pitot Tube Cp: 0.99

Avg. Tunnel Velocity: 13.67 ft/sec.
Initial Tunnel Flow: 152.4 scfm
Average Tunnel Flow: 154.2 scfm
Post-Test Leak Check (1): 0.000 cfm @ 6 in. Hg
Post-Test Leak Check (2): 0.000 cfm @ 6 in. Hg
Average Test Piece Fuel Moisture: 20.26 Dry Basis %

Technician Signature: _____

Velocity Traverse Data	Pt.1	Pt.2	Pt.3	Pt.4	Pt.5	Pt.6	Pt.7	Pt.8	Center	
Initial dP	0.030	0.046	0.050	0.044	0.030	0.044	0.050	0.034	0.050	"H2O
Temp:	89	89	88	88	89	89	89	89	89	°F

V_{strav} 13.67 ft/sec V_{scent} 14.99 ft/sec F_p 0.912

	Particulate Sampling Data														Fuel Weight (lb)		Temperature Data (°F)												Stack Gas Data		
Elapsed Time (min)	Gas Meter 1 (ft^3)	Gas Meter 2 (ft^3)	Sample Rate 1 (cfm)	Sample Rate 2 (cfm)	Orifice dH 1 ("H_2O)	Meter 1 Temp (°F)	Meter 1 Vacuum ("Hg)	Orifice dH 2 ("H_2O)	Meter 2 Temp (°F)	Meter 2 Vacuum ("Hg)	Dilution Tunnel (°F)	Dilution Tunnel Center dP	Pro. Rate 1	Pro. Rate 2	Scale Reading	Weight Change	Firebox Top	Firebox Bottom	Firebox Back	Firebox Left	Firebox Right	Avg. Stove Surface	Firebox Internal	Stack	Filter 1	Dryer Exit 1	Filter 2	Dryer Exit 2	Ambient	Draft ("H_2O)	CO_2 (%)	CO (%)
74	11.994	11.961	0.16	0.16	1.35	81	1.98	1.13	82	1.2	96	0.050	101	100	2.6	-0.1	563	301	803	426	319	482	1394	346	75	76	74	75	72	-0.045	11.6	0.01
75	12.157	12.124	0.16	0.16	1.34	81	1.99	1.13	82	1.2	97	0.050	101	101	2.5	-0.1	570	302	809	427	321	486	1502	351	75	76	74	75	72	-0.046	13.11	0.53
76	12.320	12.286	0.16	0.16	1.34	81	1.98	1.13	82	1.2	98	0.050	101	100	2.4	-0.1	573	302	815	428	323	488	1507	355	75	76	74	75	71	-0.046	12.99	0.63
77	12.484	12.449	0.16	0.16	1.34	81	1.98	1.13	82	1.2	98	0.050	101	101	2.3	-0.1	578	301	820	428	325	490	1476	357	75	76	74	75	71	-0.045	12.48	0.54
78	12.648	12.611	0.16	0.16	1.34	82	1.98	1.13	82	1.2	97	0.050	101	100	2.3	0	584	301	822	428	328	493	1431	354	75	76	74	75	72	-0.046	11.97	0.05
79	12.811	12.774	0.16	0.16	1.34	82	1.99	1.13	82	1.2	97	0.050	100	101	2.2	-0.1	590	301	822	429	330	494	1382	349	75	76	74	75	71	-0.044	11.17	0.01
80	12.974	12.936	0.16	0.16	1.33	82	1.98	1.13	82	1.2	97	0.050	100	100	2.1	-0.1	596	301	819	429	333	496	1332	346	75	76	74	75	71	-0.044	10.33	0.01
81	13.137	13.100	0.16	0.16	1.34	82	1.98	1.13	82	1.2	97	0.050	100	102	2.1	0	601	301	814	429	335	496	1290	342	75	76	74	76	72	-0.043	9.7	0.01
82	13.300	13.262	0.16	0.16	1.34	82	1.98	1.12	82	1.2	97	0.050	100	100	2.0	-0.1	606	301	808	428	338	496	1246	337	75	76	74	76	72	-0.043	9.38	0.03
83	13.463	13.424	0.16	0.16	1.35	82	1.98	1.12	82	1.2	97	0.050	100	100	2.0	0	609	301	800	428	340	496	1217	332	75	76	74	76	72	-0.043	8.73	0.06
84	13.627	13.586	0.16	0.16	1.35	82	1.97	1.13	83	1.2	96	0.050	101	100	1.9	-0.1	611	301	792	428	343	495	1176	326	75	76	74	76	72	-0.042	8.24	0.18
85	13.790	13.749	0.16	0.16	1.35	82	1.98	1.13	83	1.2	96	0.050	100	101	1.9	0	610	301	782	428	345	493	1133	323	75	76	74	76	72	-0.041	7.54	0.47
86	13.954	13.912	0.16	0.16	1.34	82	1.97	1.12	83	1.2	96	0.050	101	101	1.9	0	607	301	772	428	348	491	1097	318	75	76	74	76	72	-0.040	6.89	0.56
87	14.118	14.074	0.16	0.16	1.34	82	1.97	1.13	83	1.2	95	0.050	101	100	1.8	-0.1	603	301	762	428	350	489	1083	317	75	76	74	76	72	-0.039	7.11	0.42
88	14.281	14.236	0.16	0.16	1.33	82	1.98	1.13	83	1.2	95	0.050	100	100	1.8	0	598	301	751	427	353	486	1046	312	75	76	74	76	72	-0.040	6.78	0.59
89	14.444	14.399	0.16	0.16	1.34	82	1.98	1.13	83	1.2	95	0.050	100	101	1.8	0	595	302	740	427	356	484	1010	308	75	76	74	76	72	-0.040	6.23	0.72
90	14.607	14.562	0.16	0.16	1.34	82	1.98	1.12	83	1.2	94	0.050	100	101	1.7	-0.1	587	302	729	427	359	481	984	304	75	76	74	76	72	-0.038	5.88	0.87
91	14.771	14.724	0.16	0.16	1.35	82	1.98	1.12	83	1.2	95	0.050	101	100	1.7	0	582	303	717	426	363	478	957	300	75	76	74	76	72	-0.038	5.68	0.96
92	14.934	14.887	0.16	0.16	1.34	82	1.98	1.12	83	1.2	94	0.050	100	101	1.7	0	574	303	705	425	366	475	927	297	75	76	74	76	72	-0.036	5.53	0.95
93	15.097	15.049	0.16	0.16	1.35	82	1.98	1.12	83	1.2	94	0.050	100	100	1.7	0	568	303	694	424	370	472	901	293	75	76	74	76	72	-0.036	5.28	1.05
94	15.261	15.212	0.16	0.16	1.35	82	1.98	1.13	83	1.2	94	0.050	101	101	1.6	-0.1	562	303	683	423	373	469	882	290	75	76	74	76	72	-0.036	5.08	0.98
95	15.425	15.375	0.16	0.16	1.33	82	1.98	1.13	83	1.2	93	0.050	101	100	1.6	0	558	303	671	422	376	466	866	287	75	76	74	76	72	-0.035	5.05	0.92
96	15.588	15.537	0.16	0.16	1.35	82	1.98	1.12	83	1.2	93	0.050	100	100	1.6	0	555	303	660	421	378	463	851	286	75	76	74	75	72	-0.033	4.93	0.96
97	15.752	15.699	0.16	0.16	1.34	82	1.98	1.13	83	1.2	93	0.050	101	100	1.6	0	554	303	650	420	381	462	838	283	75	76	74	75	72	-0.034	4.85	1.01
98	15.915	15.862	0.16	0.16	1.34	82	1.98	1.13	83	1.2	92	0.050	100	100	1.6	0	552	304	640	419	383	460	829	280	75	76	74	75	72	-0.033	4.87	1.03
99	16.079	16.026	0.16	0.16	1.34	82	1.98	1.12	83	1.2	92	0.050	101	101	1.6	0	549	304	630	418	385	457	820	277	75	76	74	75	72	-0.033	4.91	1.03
100	16.242	16.188	0.16	0.16	1.35	82	1.98	1.12	83	1.2	92	0.050	100	100	1.5	-0.1	546	304	621	417	386	455	810	274	75	76	74	75	72	-0.033	4.83	1.05
101	16.405	16.350	0.16	0.16	1.34	82	1.97	1.12	83	1.2	92	0.050	100	100	1.5	0	541	304	612	416	387	452	799	271	75	76	74	75	72	-0.032	4.84	1.1
102	16.569	16.513	0.16	0.16	1.35	82	1.98	1.13	83	1.2	91	0.050	101	100	1.5	0	538	304	604	415	388	450	790	269	75	76	74	75	72	-0.031	4.74	1.14
103	16.733	16.676	0.16	0.16	1.34	82	1.98	1.13	83	1.2	91	0.050	101	100	1.5	0	535	304	596	413	389	447	785	268	75	76	74	75	72	-0.031	4.84	1.12
104	16.897	16.839	0.16	0.16	1.34	83	1.98	1.13	83	1.2	91	0.050	100	100	1.5	0	532	304	588	412	389	445	780	265	75	76	74	75	72	-0.031	4.91	1.12
105	17.061	17.001	0.16	0.16	1.34	83	1.98	1.12	83	1.2	91	0.050	100	100	1.5	0	528	305	581	411	390	443	771	264	75	76	74	75	72	-0.029	4.85	1.12
106	17.224	17.163	0.16	0.16	1.34	83	1.98	1.13	83	1.2	91	0.050	100	100	1.5	0	525	305	573	410	391	441	762	263	75	76	74	75	72	-0.030	4.75	1.16
107	17.388	17.326	0.16	0.16	1.34	83	1.98	1.13	83	1.2	90	0.050	100	100	1.4	-0.1	520	305	567	408	391	438	752	260	74	75	74	75	72	-0.030	4.66	1.19
108	17.551	17.490	0.16	0.16	1.34	83	1.98	1.12	83	1.2	90	0.050	100	101	1.4	0	518	305	560	408	391	436	744	258	75	75	74	75	72	-0.028	4.69	1.26
109	17.715	17.652	0.16	0.16	1.34	83	1.98	1.12	83	1.2	90	0.050	100	100	1.4	0	516	305	554	406	391	434	735	256	75	75	74	75	72	-0.029	4.49	1.25
110	17.878	17.815	0.16	0.16	1.35	83	1.98	1.13	83	1.2	90	0.050	100	100	1.4	0	512	305	548	405	391	432	727	255	74	75	74	75	72	-0.028	4.49	1.27

Wood Heater Test Data - ASTM E2780 / ASTM E2515

Intrepid IV - KJM 2/12/18

Run: 3

Manufacturer: Hearth & Home
Model: ~~Intrepid IV~~
Tracking No.: 2264
Project No.: 0135WS038E
Test Date: 21-Dec-17
Beginning Clock Time: 14:51

Total Sampling Time: 216 min
Recording Interval: 1 min
Background Sample Volume: _____ cubic feet

Meter Box Y Factor: 0.981 (1) 0.984 (2) _____ (Amb)

Barometric Pressure:	Begin	Middle	End	Average
	30.41	30.41	30.4	30.41 "Hg

OMNI Equipment Numbers: _____

PM Control Modules: 0035, 0036
Dilution Tunnel MW(dry): 29.00 lb/lb-mole
Dilution Tunnel MW(wet): 28.78 lb/lb-mole
Dilution Tunnel H2O: 2.00 percent
Dilution Tunnel Static: -0.190 "H2O
Tunnel Area: 0.19635 ft2
Pitot Tube Cp: 0.99

Avg. Tunnel Velocity: 13.67 ft/sec.
Initial Tunnel Flow: 152.4 scfm
Average Tunnel Flow: 154.2 scfm
Post-Test Leak Check (1): 0.000 cfm @ 6 in. Hg
Post-Test Leak Check (2): 0.000 cfm @ 6 in. Hg
Average Test Piece Fuel Moisture: 20.26 Dry Basis %

Technician Signature: _____

Velocity Traverse Data	Pt.1	Pt.2	Pt.3	Pt.4	Pt.5	Pt.6	Pt.7	Pt.8	Center	
Initial dP	0.030	0.046	0.050	0.044	0.030	0.044	0.050	0.034	0.050	"H2O
Temp:	89	89	88	88	89	89	89	89	89	°F

V_{strav} 13.67 ft/sec V_{scent} 14.99 ft/sec F_p 0.912

	Particulate Sampling Data														Fuel Weight (lb)		Temperature Data (°F)												Stack Gas Data		
Elapsed Time (min)	Gas Meter 1 (ft^3)	Gas Meter 2 (ft^3)	Sample Rate 1 (cfm)	Sample Rate 2 (cfm)	Orifice dH 1 ("H_2O)	Meter 1 Temp (°F)	Meter 1 Vacuum ("Hg)	Orifice dH 2 ("H_2O)	Meter 2 Temp (°F)	Meter 2 Vacuum ("Hg)	Dilution Tunnel (°F)	Dilution Tunnel Center dP	Pro. Rate 1	Pro. Rate 2	Scale Reading	Weight Change	Firebox Top	Firebox Bottom	Firebox Back	Firebox Left	Firebox Right	Avg. Stove Surface	Firebox Internal	Stack	Filter 1	Dryer Exit 1	Filter 2	Dryer Exit 2	Ambient	Draft ("H_2O)	CO_2 (%)	CO (%)
111	18.042	17.977	0.16	0.16	1.35	83	1.97	1.13	83	1.2	89	0.050	100	100	1.4	0	510	305	542	404	392	431	719	253	74	75	74	75	72	-0.029	4.44	1.32
112	18.205	18.140	0.16	0.16	1.35	83	1.98	1.13	83	1.2	89	0.050	100	100	1.4	0	506	305	536	403	391	428	710	251	75	75	74	75	72	-0.028	4.33	1.31
113	18.370	18.304	0.17	0.16	1.35	83	1.98	1.12	83	1.2	89	0.050	101	101	1.4	0	503	305	530	402	391	426	703	249	75	75	74	75	72	-0.028	4.27	1.28
114	18.534	18.466	0.16	0.16	1.34	83	1.98	1.12	83	1.2	89	0.050	100	100	1.3	-0.1	501	305	525	401	391	425	697	246	74	75	74	75	72	-0.027	4.29	1.36
115	18.697	18.628	0.16	0.16	1.35	83	1.97	1.13	83	1.2	88	0.050	99	99	1.3	0	497	305	519	400	391	422	690	246	74	75	74	75	72	-0.027	4.3	1.36
116	18.861	18.791	0.16	0.16	1.34	83	1.98	1.13	83	1.2	89	0.050	100	100	1.3	0	496	305	514	398	391	421	684	244	74	75	74	75	72	-0.027	4.31	1.38
117	19.024	18.954	0.16	0.16	1.35	83	1.98	1.13	83	1.2	87	0.050	99	100	1.3	0	493	305	509	397	390	419	678	242	74	75	74	75	72	-0.027	4.19	1.36
118	19.188	19.117	0.16	0.16	1.34	83	1.98	1.13	84	1.2	88	0.050	100	100	1.3	0	491	305	504	396	390	417	672	240	74	75	74	75	72	-0.027	4.14	1.36
119	19.351	19.280	0.16	0.16	1.35	83	1.98	1.12	83	1.2	88	0.050	99	100	1.3	0	489	305	499	395	389	415	667	239	74	75	74	74	72	-0.026	4.1	1.33
120	19.515	19.442	0.16	0.16	1.35	83	1.97	1.13	83	1.2	87	0.050	100	99	1.3	0	486	304	495	394	389	414	660	236	74	75	74	74	72	-0.027	3.99	1.33
121	19.678	19.605	0.16	0.16	1.35	83	1.98	1.13	83	1.2	87	0.050	99	100	1.3	0	483	304	490	393	389	412	655	235	74	75	74	74	72	-0.025	3.98	1.35
122	19.842	19.768	0.16	0.16	1.35	83	1.98	1.13	83	1.2	87	0.050	100	100	1.2	-0.1	482	304	486	391	389	410	648	234	74	75	74	74	72	-0.026	3.81	1.33
123	20.007	19.931	0.17	0.16	1.34	83	1.99	1.13	84	1.2	88	0.050	101	100	1.2	0	479	304	481	390	388	408	638	233	74	75	74	74	72	-0.025	3.75	1.45
124	20.171	20.094	0.16	0.16	1.35	83	1.97	1.13	84	1.2	88	0.050	100	100	1.2	0	476	304	477	389	387	407	631	232	74	75	74	74	72	-0.024	3.69	1.46
125	20.334	20.256	0.16	0.16	1.34	83	1.97	1.13	84	1.2	87	0.050	99	99	1.2	0	473	303	473	387	386	404	627	232	74	74	74	74	72	-0.023	3.7	1.51
126	20.498	20.419	0.16	0.16	1.34	83	1.99	1.13	84	1.2	87	0.050	100	100	1.2	0	472	303	468	386	385	403	622	230	74	74	74	74	72	-0.024	3.79	1.56
127	20.661	20.583	0.16	0.16	1.34	83	1.98	1.13	84	1.2	87	0.050	99	100	1.2	0	469	302	464	385	384	401	619	229	74	74	74	74	72	-0.023	3.74	1.51
128	20.825	20.746	0.16	0.16	1.35	83	1.99	1.13	84	1.2	87	0.050	100	100	1.2	0	467	302	461	384	384	400	614	228	74	74	74	74	72	-0.023	3.69	1.52
129	20.989	20.908	0.16	0.16	1.35	83	1.97	1.13	84	1.2	87	0.050	100	99	1.2	0	466	302	457	382	383	398	608	226	74	74	74	74	72	-0.023	3.65	1.61
130	21.153	21.071	0.16	0.16	1.35	83	1.98	1.13	84	1.2	87	0.050	100	100	1.1	-0.1	463	301	453	381	382	396	602	224	74	74	74	74	72	-0.023	3.55	1.54
131	21.316	21.234	0.16	0.16	1.35	83	1.99	1.13	84	1.2	87	0.050	99	100	1.1	0	462	301	449	379	381	394	597	223	74	74	74	74	72	-0.021	3.52	1.55
132	21.480	21.398	0.16	0.16	1.35	83	1.98	1.12	84	1.2	87	0.050	100	100	1.1	0	459	301	445	378	380	393	593	222	74	74	74	74	72	-0.022	3.45	1.53
133	21.645	21.560	0.16	0.16	1.35	83	1.97	1.12	84	1.2	87	0.050	101	99	1.1	0	458	300	442	376	379	391	588	221	74	74	74	74	72	-0.021	3.54	1.66
134	21.809	21.723	0.16	0.16	1.33	83	1.98	1.13	84	1.2	86	0.050	100	100	1.1	0	455	300	438	375	378	389	585	219	74	74	74	74	72	-0.021	3.57	1.58
135	21.972	21.885	0.16	0.16	1.34	83	1.98	1.13	84	1.2	86	0.050	99	99	1.1	0	455	299	435	373	377	388	580	219	74	74	74	74	72	-0.021	3.55	1.59
136	22.136	22.048	0.16	0.16	1.34	83	1.98	1.13	84	1.2	86	0.050	100	100	1.1	0	451	299	431	372	376	386	575	217	74	74	74	74	72	-0.021	3.53	1.63
137	22.300	22.212	0.16	0.16	1.34	83	1.98	1.13	84	1.2	86	0.050	100	100	1.1	0	450	298	428	370	375	384	571	217	74	74	74	74	72	-0.020	3.51	1.58
138	22.463	22.375	0.16	0.16	1.35	83	1.98	1.12	84	1.2	86	0.050	99	100	1.1	0	447	298	425	369	374	383	566	215	74	74	74	74	72	-0.021	3.38	1.58
139	22.627	22.537	0.16	0.16	1.34	83	1.98	1.13	84	1.2	85	0.050	100	99	1.0	-0.1	446	297	422	368	373	381	561	214	74	74	74	74	72	-0.020	3.32	1.54
140	22.791	22.700	0.16	0.16	1.35	83	1.98	1.13	84	1.2	86	0.050	100	100	1.0	0	444	297	419	366	371	379	555	213	74	74	74	74	72	-0.021	3.3	1.54
141	22.954	22.863	0.16	0.16	1.35	83	1.98	1.13	84	1.2	85	0.050	99	100	1.0	0	442	296	416	365	370	378	551	211	74	74	74	74	72	-0.019	3.23	1.48
142	23.118	23.027	0.16	0.16	1.35	83	1.98	1.13	84	1.2	85	0.050	100	100	1.0	0	441	295	412	363	369	376	546	210	74	74	74	74	72	-0.021	3.17	1.53
143	23.283	23.189	0.17	0.16	1.35	83	1.98	1.12	84	1.2	85	0.050	100	99	1.0	0	439	295	410	361	368	375	542	208	74	74	74	74	72	-0.020	3.14	1.47
144	23.447	23.352	0.16	0.16	1.35	83	1.99	1.13	84	1.2	85	0.050	100	100	1.0	0	436	294	407	360	367	373	537	206	74	74	74	74	72	-0.019	3.11	1.44
145	23.611	23.515	0.16	0.16	1.34	83	1.98	1.13	84	1.2	84	0.050	100	99	1.0	0	434	294	404	358	366	371	533	206	74	74	74	73	72	-0.018	3.14	1.44
146	23.775	23.678	0.16	0.16	1.35	83	1.98	1.13	84	1.2	84	0.050	100	99	1.0	0	433	293	401	357	365	370	529	204	74	74	73	73	73	-0.018	3.07	1.41
147	23.938	23.841	0.16	0.16	1.34	83	1.98	1.13	84	1.2	85	0.050	99	100	1.0	0	431	292	398	355	363	368	525	203	74	74	73	73	72	-0.018	3.03	1.39

Wood Heater Test Data - ASTM E2780 / ASTM E2515

Intrepid IV - KJM 2/12/18

Run: 3

Manufacturer: Hearth & Home
Model: ~~Intrepid IV~~
Tracking No.: 2264
Project No.: 0135WS038E
Test Date: 21-Dec-17
Beginning Clock Time: 14:51

Total Sampling Time: 216 min
Recording Interval: 1 min
Background Sample Volume: _____ cubic feet

Meter Box Y Factor: 0.981 (1) 0.984 (2) _____ (Amb)

Barometric Pressure:	Begin	Middle	End	Average
	30.41	30.41	30.4	30.41 "Hg

OMNI Equipment Numbers: _____

PM Control Modules: 0035, 0036
Dilution Tunnel MW(dry): 29.00 lb/lb-mole
Dilution Tunnel MW(wet): 28.78 lb/lb-mole
Dilution Tunnel H2O: 2.00 percent
Dilution Tunnel Static: -0.190 "H2O
Tunnel Area: 0.19635 ft2
Pitot Tube Cp: 0.99

Avg. Tunnel Velocity: 13.67 ft/sec.
Initial Tunnel Flow: 152.4 scfm
Average Tunnel Flow: 154.2 scfm
Post-Test Leak Check (1): 0.000 cfm @ 6 in. Hg
Post-Test Leak Check (2): 0.000 cfm @ 6 in. Hg
Average Test Piece Fuel Moisture: 20.26 Dry Basis %

Technician Signature: _____

Velocity Traverse Data	Pt.1	Pt.2	Pt.3	Pt.4	Pt.5	Pt.6	Pt.7	Pt.8	Center	
Initial dP	0.030	0.046	0.050	0.044	0.030	0.044	0.050	0.034	0.050	"H2O
Temp:	89	89	88	88	89	89	89	89	89	°F

V_{strav} 13.67 ft/sec V_{scent} 14.99 ft/sec F_p 0.912

	Particulate Sampling Data														Fuel Weight (lb)		Temperature Data (°F)												Stack Gas Data		
Elapsed Time (min)	Gas Meter 1 (ft^3)	Gas Meter 2 (ft^3)	Sample Rate 1 (cfm)	Sample Rate 2 (cfm)	Orifice dH 1 ("H_2O)	Meter 1 Temp (°F)	Meter 1 Vacuum ("Hg)	Orifice dH 2 ("H_2O)	Meter 2 Temp (°F)	Meter 2 Vacuum ("Hg)	Dilution Tunnel (°F)	Dilution Tunnel Center dP	Pro. Rate 1	Pro. Rate 2	Scale Reading	Weight Change	Firebox Top	Firebox Bottom	Firebox Back	Firebox Left	Firebox Right	Avg. Stove Surface	Firebox Internal	Stack	Filter 1	Dryer Exit 1	Filter 2	Dryer Exit 2	Ambient	Draft ("H_2O)	CO_2 (%)	CO (%)
148	24.102	24.004	0.16	0.16	1.35	83	1.98	1.12	84	1.2	84	0.050	100	99	1.0	0	429	292	395	354	363	367	522	202	74	74	73	73	72	-0.018	2.98	1.5
149	24.266	24.166	0.16	0.16	1.35	83	1.98	1.13	84	1.2	84	0.050	100	99	0.9	-0.1	428	291	392	353	361	365	517	203	74	74	73	73	72	-0.018	3.02	1.53
150	24.429	24.329	0.16	0.16	1.35	83	1.98	1.13	84	1.2	84	0.050	99	99	0.9	0	426	291	390	351	360	364	513	202	74	73	73	73	72	-0.018	2.86	1.61
151	24.593	24.493	0.16	0.16	1.35	83	1.98	1.13	84	1.2	83	0.050	100	100	0.9	0	422	290	387	349	359	361	509	200	74	73	73	73	72	-0.018	2.87	1.65
152	24.757	24.656	0.16	0.16	1.35	83	1.97	1.13	84	1.2	83	0.050	100	99	0.9	0	419	289	384	348	358	360	505	199	74	73	73	73	72	-0.017	2.92	1.69
153	24.922	24.819	0.16	0.16	1.35	83	1.98	1.12	84	1.2	83	0.050	100	99	0.9	0	417	289	382	346	357	358	501	198	73	73	73	73	72	-0.018	2.83	1.61
154	25.086	24.982	0.16	0.16	1.35	83	1.98	1.13	84	1.2	83	0.050	100	99	0.9	0	414	288	379	345	356	356	497	196	73	73	73	73	72	-0.017	2.79	1.58
155	25.250	25.145	0.16	0.16	1.35	83	1.98	1.13	84	1.2	83	0.050	100	99	0.9	0	411	287	377	343	355	355	493	195	73	73	73	73	72	-0.017	2.73	1.53
156	25.414	25.308	0.16	0.16	1.35	83	1.98	1.13	84	1.2	83	0.050	100	99	0.9	0	409	286	374	342	354	353	490	194	73	73	73	73	73	-0.016	2.81	1.6
157	25.578	25.471	0.16	0.16	1.34	83	1.98	1.13	84	1.2	83	0.050	100	99	0.9	0	407	286	372	340	353	352	487	194	73	73	73	73	72	-0.016	2.81	1.61
158	25.742	25.633	0.16	0.16	1.34	83	1.98	1.13	84	1.2	83	0.050	100	99	0.9	0	404	285	369	339	352	350	484	192	73	73	73	73	73	-0.016	2.72	1.54
159	25.905	25.796	0.16	0.16	1.34	83	1.97	1.13	84	1.2	83	0.050	99	99	0.9	0	404	284	366	337	351	348	481	191	73	73	73	73	73	-0.016	2.77	1.57
160	26.070	25.960	0.16	0.16	1.35	83	1.98	1.13	84	1.2	83	0.050	100	100	0.8	-0.1	401	283	364	336	350	347	478	190	73	73	73	73	72	-0.015	2.73	1.54
161	26.233	26.123	0.16	0.16	1.35	83	1.98	1.13	84	1.2	83	0.050	99	99	0.8	0	399	282	362	335	349	345	474	190	73	73	73	73	72	-0.015	2.7	1.52
162	26.397	26.286	0.16	0.16	1.35	83	1.98	1.13	84	1.2	82	0.050	100	99	0.8	0	397	282	359	333	348	344	471	188	73	73	73	73	72	-0.016	2.64	1.48
163	26.561	26.448	0.16	0.16	1.35	83	1.98	1.13	84	1.2	83	0.050	100	99	0.8	0	394	281	357	332	347	342	468	189	73	73	73	73	72	-0.015	2.65	1.49
164	26.726	26.612	0.16	0.16	1.35	83	1.98	1.13	84	1.2	83	0.050	100	100	0.8	0	393	280	355	330	346	341	465	188	73	73	73	73	72	-0.015	2.69	1.51
165	26.890	26.775	0.16	0.16	1.35	83	1.97	1.13	84	1.2	82	0.050	100	99	0.8	0	392	279	353	329	345	340	462	187	73	73	73	73	72	-0.014	2.63	1.47
166	27.055	26.938	0.16	0.16	1.35	83	1.98	1.14	84	1.2	82	0.050	100	99	0.8	0	390	278	351	327	344	338	459	185	73	73	73	73	72	-0.014	2.66	1.49
167	27.218	27.102	0.16	0.16	1.35	83	1.98	1.13	84	1.2	82	0.050	99	100	0.8	0	388	278	348	326	343	337	456	185	73	73	73	73	72	-0.015	2.64	1.48
168	27.383	27.264	0.16	0.16	1.34	83	1.99	1.13	84	1.2	82	0.050	100	99	0.8	0	386	277	346	324	342	335	453	185	73	73	73	73	72	-0.015	2.61	1.46
169	27.547	27.427	0.16	0.16	1.34	83	1.97	1.13	84	1.2	82	0.050	100	99	0.8	0	386	276	344	323	342	334	451	183	73	73	73	73	72	-0.014	2.63	1.48
170	27.710	27.591	0.16	0.16	1.35	83	1.98	1.13	84	1.2	82	0.050	99	100	0.8	0	384	275	342	322	341	333	448	184	73	73	73	73	72	-0.014	2.64	1.48
171	27.875	27.754	0.16	0.16	1.35	83	1.98	1.13	84	1.2	82	0.050	100	99	0.7	-0.1	382	274	340	320	340	331	445	182	73	73	73	73	72	-0.014	2.57	1.44
172	28.038	27.917	0.16	0.16	1.35	83	1.98	1.13	84	1.2	82	0.050	99	99	0.7	0	382	274	338	319	339	330	442	181	73	73	73	73	72	-0.014	2.57	1.44
173	28.202	28.080	0.16	0.16	1.35	83	1.98	1.13	84	1.2	81	0.050	99	99	0.7	0	380	273	336	318	338	329	441	180	73	73	73	73	72	-0.013	2.59	1.45
174	28.367	28.243	0.16	0.16	1.35	83	1.98	1.13	84	1.2	82	0.050	100	99	0.7	0	378	272	334	316	337	327	439	180	73	73	73	73	72	-0.013	2.59	1.45
175	28.531	28.406	0.16	0.16	1.35	83	1.98	1.13	84	1.2	82	0.050	100	99	0.7	0	377	271	332	315	337	326	435	179	73	73	73	72	72	-0.013	2.53	1.41
176	28.695	28.570	0.16	0.16	1.36	83	1.98	1.13	84	1.2	82	0.050	100	100	0.7	0	376	271	331	314	335	325	433	179	73	73	73	72	72	-0.014	2.5	1.39
177	28.860	28.733	0.16	0.16	1.35	83	1.98	1.13	84	1.2	81	0.050	100	99	0.7	0	374	270	329	312	335	324	431	178	73	72	73	72	72	-0.013	2.51	1.41
178	29.024	28.896	0.16	0.16	1.34	83	1.98	1.13	84	1.2	82	0.050	100	99	0.7	0	372	269	327	311	334	323	429	177	73	73	73	72	72	-0.013	2.46	1.38
179	29.188	29.059	0.16	0.16	1.35	83	1.98	1.12	84	1.2	81	0.050	99	99	0.7	0	373	268	325	310	332	322	433	177	73	72	73	72	72	-0.011	3.04	1.46
180	29.352	29.222	0.16	0.16	1.35	83	1.98	1.13	84	1.2	81	0.050	99	99	0.7	0	377	268	324	309	332	322	436	176	73	72	73	72	72	-0.011	4.37	1.19
181	29.516	29.385	0.16	0.16	1.35	83	1.98	1.13	84	1.2	81	0.050	99	99	0.6	-0.1	381	267	322	308	331	322	438	176	73	72	72	72	72	-0.011	4.45	1.16
182	29.680	29.549	0.16	0.16	1.35	83	1.98	1.13	83	1.2	81	0.050	99	100	0.6	0	382	266	322	307	330	321	496	185	73	72	72	72	72	-0.011	4.98	0.79
183	29.844	29.712	0.16	0.16	1.35	83	1.98	1.13	84	1.2	81	0.050	99	99	0.6	0	379	266	322	305	329	320	529	183	73	72	72	72	73	-0.012	5.66	0.69
184	30.008	29.875	0.16	0.16	1.34	83	1.98	1.13	84	1.2	81	0.050	99	99	0.6	0	378	265	322	304	328	319	546	183	73	72	72	72	72	-0.013	5.41	0.63

Wood Heater Test Data - ASTM E2780 / ASTM E2515

Intrepid IV - KJM 2/12/18

Run: 3

Manufacturer: Hearth & Home
Model: ~~Intrepid IV~~
Tracking No.: 2264
Project No.: 0135WS038E
Test Date: 21-Dec-17
Beginning Clock Time: 14:51

Total Sampling Time: 216 min
Recording Interval: 1 min
Background Sample Volume: _____ cubic feet

Meter Box Y Factor: 0.981 (1) 0.984 (2) _____ (Amb)

Barometric Pressure:	Begin	Middle	End	Average
	30.41	30.41	30.4	30.41 "Hg

OMNI Equipment Numbers: _____

PM Control Modules: 0035, 0036
Dilution Tunnel MW(dry): 29.00 lb/lb-mole
Dilution Tunnel MW(wet): 28.78 lb/lb-mole
Dilution Tunnel H2O: 2.00 percent
Dilution Tunnel Static: -0.190 "H2O
Tunnel Area: 0.19635 ft2
Pitot Tube Cp: 0.99

Avg. Tunnel Velocity: 13.67 ft/sec.
Initial Tunnel Flow: 152.4 scfm
Average Tunnel Flow: 154.2 scfm
Post-Test Leak Check (1): 0.000 cfm @ 6 in. Hg
Post-Test Leak Check (2): 0.000 cfm @ 6 in. Hg
Average Test Piece Fuel Moisture: 20.26 Dry Basis %

Technician Signature: _____

Velocity Traverse Data	Pt.1	Pt.2	Pt.3	Pt.4	Pt.5	Pt.6	Pt.7	Pt.8	Center	
Initial dP	0.030	0.046	0.050	0.044	0.030	0.044	0.050	0.034	0.050	"H2O
Temp:	89	89	88	88	89	89	89	89	89	°F

V_{strav} 13.67 ft/sec V_{scent} 14.99 ft/sec F_p 0.912

	Particulate Sampling Data														Fuel Weight (lb)		Temperature Data (°F)												Stack Gas Data		
Elapsed Time (min)	Gas Meter 1 (ft^3)	Gas Meter 2 (ft^3)	Sample Rate 1 (cfm)	Sample Rate 2 (cfm)	Orifice dH 1 ("H_2O)	Meter 1 Temp (°F)	Meter 1 Vacuum ("Hg)	Orifice dH 2 ("H_2O)	Meter 2 Temp (°F)	Meter 2 Vacuum ("Hg)	Dilution Tunnel (°F)	Dilution Tunnel Center dP	Pro. Rate 1	Pro. Rate 2	Scale Reading	Weight Change	Firebox Top	Firebox Bottom	Firebox Back	Firebox Left	Firebox Right	Avg. Stove Surface	Firebox Internal	Stack	Filter 1	Dryer Exit 1	Filter 2	Dryer Exit 2	Ambient	Draft ("H_2O)	CO_2 (%)	CO (%)
185	30.172	30.038	0.16	0.16	1.35	83	1.98	1.13	84	1.2	81	0.050	99	99	0.6	0	377	264	323	303	327	319	561	184	73	72	72	72	72	-0.014	5.35	0.59
186	30.336	30.201	0.16	0.16	1.35	83	1.98	1.13	84	1.2	81	0.050	99	99	0.5	-0.1	376	264	324	302	327	319	568	184	73	72	72	72	72	-0.014	5.22	0.6
187	30.500	30.365	0.16	0.16	1.34	83	1.98	1.13	84	1.2	81	0.050	99	100	0.5	0	376	263	325	301	326	318	577	185	73	72	72	72	72	-0.014	5.12	0.61
188	30.665	30.528	0.16	0.16	1.35	83	1.98	1.12	84	1.2	81	0.050	100	99	0.5	0	376	263	327	300	325	318	576	185	73	72	72	72	72	-0.014	5.16	0.59
189	30.830	30.691	0.16	0.16	1.35	83	1.98	1.13	84	1.2	81	0.050	100	99	0.5	0	377	262	328	299	324	318	582	186	73	72	72	72	72	-0.015	5.15	0.64
190	30.994	30.854	0.16	0.16	1.35	83	1.97	1.13	83	1.2	81	0.050	99	99	0.5	0	376	262	330	298	323	318	586	187	73	72	72	72	72	-0.014	5.01	0.63
191	31.158	31.017	0.16	0.16	1.35	83	1.98	1.13	83	1.2	81	0.050	99	99	0.5	0	378	262	331	297	322	318	591	188	73	72	72	72	72	-0.014	5.18	0.61
192	31.322	31.181	0.16	0.16	1.34	83	1.98	1.13	84	1.2	80	0.050	99	100	0.4	-0.1	378	261	333	296	321	318	596	187	73	72	72	72	72	-0.015	5.12	0.56
193	31.486	31.344	0.16	0.16	1.35	83	1.98	1.12	84	1.2	81	0.050	99	99	0.4	0	378	261	335	295	321	318	598	188	73	72	72	72	72	-0.014	5.19	0.56
194	31.650	31.507	0.16	0.16	1.35	83	1.98	1.13	83	1.2	81	0.050	99	99	0.4	0	380	261	336	294	320	318	597	189	73	72	72	72	72	-0.014	5.08	0.57
195	31.814	31.670	0.16	0.16	1.35	83	1.98	1.13	83	1.2	81	0.050	99	99	0.4	0	381	261	338	294	319	319	600	189	73	72	72	72	72	-0.014	5.1	0.59
196	31.977	31.833	0.16	0.16	1.35	83	1.98	1.13	83	1.2	81	0.050	99	99	0.4	0	382	261	339	293	318	319	601	189	73	72	72	72	72	-0.014	5.13	0.6
197	32.142	31.997	0.17	0.16	1.35	83	1.98	1.12	83	1.2	81	0.050	100	100	0.4	0	382	261	341	292	318	319	603	190	72	72	72	72	72	-0.015	5.03	0.61
198	32.306	32.160	0.16	0.16	1.35	83	1.98	1.13	84	1.2	81	0.050	99	99	0.3	-0.1	384	261	342	291	317	319	602	190	72	72	72	72	72	-0.016	5.04	0.63
199	32.470	32.322	0.16	0.16	1.35	83	1.98	1.13	83	1.2	81	0.050	99	99	0.3	0	384	261	343	291	317	319	602	190	72	72	72	72	72	-0.015	4.96	0.67
200	32.634	32.485	0.16	0.16	1.35	83	1.98	1.13	83	1.2	81	0.050	99	99	0.3	0	385	261	344	290	316	319	603	190	72	72	72	72	72	-0.014	4.97	0.66
201	32.799	32.648	0.16	0.16	1.34	83	1.98	1.13	83	1.2	81	0.050	100	99	0.3	0	386	262	345	290	315	320	604	191	72	72	72	72	72	-0.015	5.03	0.68
202	32.963	32.812	0.16	0.16	1.35	83	1.98	1.13	83	1.2	81	0.050	99	100	0.3	0	387	262	346	289	315	320	605	190	72	72	72	72	72	-0.015	4.99	0.68
203	33.127	32.975	0.16	0.16	1.35	83	1.98	1.13	83	1.2	81	0.050	99	99	0.3	0	387	262	347	289	314	320	607	192	72	72	72	72	71	-0.014	5.15	0.71
204	33.291	33.138	0.16	0.16	1.35	83	1.98	1.13	83	1.2	81	0.050	99	99	0.3	0	388	262	349	288	314	320	609	192	72	72	72	72	72	-0.015	5.11	0.72
205	33.455	33.301	0.16	0.16	1.35	83	1.98	1.13	83	1.2	80	0.050	99	99	0.2	-0.1	387	263	350	288	314	320	607	192	72	72	72	72	72	-0.015	5.07	0.73
206	33.619	33.464	0.16	0.16	1.35	83	1.97	1.13	83	1.2	80	0.050	99	99	0.2	0	387	263	350	288	313	320	607	192	72	72	72	72	71	-0.016	4.98	0.75
207	33.783	33.628	0.16	0.16	1.35	83	1.97	1.13	83	1.2	80	0.050	99	100	0.2	0	388	264	351	287	313	321	605	192	72	72	72	72	71	-0.016	4.82	0.76
208	33.947	33.791	0.16	0.16	1.35	83	1.98	1.13	83	1.2	79	0.050	99	99	0.2	0	389	264	352	287	313	321	607	192	72	72	72	72	71	-0.015	5.02	0.77
209	34.111	33.954	0.16	0.16	1.35	83	1.98	1.12	83	1.2	80	0.050	99	99	0.2	0	390	264	353	287	313	321	609	191	72	72	72	72	71	-0.016	4.89	0.76
210	34.275	34.117	0.16	0.16	1.35	83	1.98	1.14	83	1.2	79	0.050	99	99	0.2	0	390	265	353	286	313	321	607	193	72	72	72	72	71	-0.016	5.1	0.8
211	34.440	34.280	0.16	0.16	1.35	83	1.97	1.13	83	1.2	79	0.050	100	99	0.2	0	391	265	354	286	312	322	609	192	72	72	72	72	71	-0.016	4.98	0.82
212	34.604	34.444	0.16	0.16	1.35	83	1.98	1.13	83	1.2	79	0.050	99	100	0.2	0	392	265	354	286	312	322	608	193	72	72	72	72	71	-0.016	5.04	0.85
213	34.769	34.607	0.16	0.16	1.35	83	1.98	1.13	83	1.2	79	0.050	100	99	0.1	-0.1	392	265	355	286	312	322	606	193	72	72	72	72	71	-0.016	5.04	0.87
214	34.933	34.770	0.16	0.16	1.35	83	1.98	1.13	83	1.2	79	0.050	99	99	0.1	0	394	266	355	285	312	322	608	193	72	72	72	72	70	-0.016	5	0.84
215	35.097	34.933	0.16	0.16	1.36	83	1.98	1.13	83	1.2	79	0.050	99	99	0.1	0	394	266	356	285	312	323	612	193	72	72	72	72	70	-0.017	5.22	0.82
216	35.262	35.097	0.16	0.16	1.35	83	1.98	1.14	83	1.2	79	0.050	100	100	0.0	-0.1	395	267	356	285	312	323	613	193	72	72	72	71	70	-0.016	5.18	0.82
Avg/Tot	35.262	35.097	0.16	0.16	1.34	81		1.13	82		89	0.050	100	100								109.8				75	73	74	72	-0.030		

Wood Heater Lab Data - ASTM E2780 / ASTM E2515

Intrepid IV - KJM 2/12/18

Manufacturer: Hearth & Home
Model: ~~Intrepiod IV~~
Tracking No.: 2264
Project No.: 0135WS038E
Run #: 3
Date: 12/21/17

Equipment Numbers:

TRAIN 1 (First Hour emissions)

Sample Component	Reagent	Filter, Probe or Dish #	Weights		
			Final, mg	Tare, mg	Particulate, mg
B. Front filter catch	Filter	D360	111.0	111.2	-0.2
C. Rear filter catch	Filter				0.0
D. Probe catch*	Probe				0.0
E. Filter seals catch*	Seals				0.0

Sub-Total | Total Particulate, mg: | -0.2

TRAIN 1 (Post First Hour Change-out)

Sample Component	Reagent	Filter, Probe or Dish #	Weights		
			Final, mg	Tare, mg	Particulate, mg
B. Front filter catch	Filter	D362	111.0	110.6	0.4
C. Rear filter catch	Filter	D361	110.3	110.8	-0.5
D. Probe catch*	Probe	4	114858.5	114857.9	0.6
E. Filter seals catch*	Seals	R545	4155.6	4154.6	1.0

Sub-Total | Total Particulate, mg: | 1.5

Train 1 Aggregate | Total Particulate, mg: | 1.3

TRAIN 2

Sample Component	Reagent	Filter, Probe or Dish #	Weights		
			Final, mg	Tare, mg	Particulate, mg
A. Front filter catch	Filter	D363	111.4	110.9	0.5
B. Rear filter catch	Filter	D364	110.9	111.0	-0.1
C. Probe catch*	Probe	OES 5	113574.2	113573.4	0.8
D. Filter seals catch*	Seals	R546	3330.0	3329.6	0.4

Total Particulate, mg: 1.6

AMBIENT

Sample Component	Reagent	Filter # or Probe #	Weights		
			Final, mg	Tare, mg	Particulate, mg
A. Front filter catch*	Filter				0.0

Total Particulate, mg: 0.0

*Particulate catch that results in a negative number, is assumed to be zero for probes and seals, negative numbers for filters are assumed to be part of the seal weight.

Component	Equations:
A. Front filter catch	Final (mg) - Tare (mg) = Particulate, mg
B. Rear filter catch	Final (mg) - Tare (mg) = Particulate, mg
C. Probe catch	Final (mg) - Tare (mg) = Particulate, mg

Technician Signature:

OMNI-Test Laboratories, Inc.

Wood Heater Test Results - ASTM E2780 / ASTM E2515

Manufacturer: Hearth & Home
Model: Intrepid IV
Project No.: 0135WS038E
Tracking No.: 2264
Run: 3
Test Date: 12/21/17

Burn Rate	**0.90 kg/hr dry**
Average Tunnel Temperature	89 degrees Fahrenheit
Average Gas Velocity in Dilution Tunnel - vs	13.67 feet/second
Average Gas Flow Rate in Dilution Tunnel - Qsd	9254.5 dscf/hour
Average Delta p	0.050 inches H20
Total Time of Test	216 minutes

	AMBIENT	SAMPLE TRAIN 1	SAMPLE TRAIN 2	FIRST HOUR FILTER (TRAIN 1)
Total Sample Volume - Vm	0.000 cubic feet	35.262 cubic feet	35.097 cubic feet	9.707 cubic feet
Average Gas Meter Temperature	72 degrees Fahrenheit	81 degrees Fahrenheit	82 degrees Fahrenheit	78 degrees Fahrenheit
Total Sample Volume (Standard Conditions) - Vmstd	0.000 dscf	34.395 dscf	34.280 dscf	9.532 dscf
Total Particulates - m_n	0 mg	1.3 mg	1.6 mg	-0.2 mg
Particulate Concentration (dry-standard) - C_f/C_s	0.000000 grams/dscf	0.00004 grams/dscf	0.00005 grams/dscf	-0.00002 grams/dscf
Total Particulate Emissions - E_T	0.00 grams	1.26 grams	1.55 grams	-0.19 grams
Particulate Emission Rate	0.00 grams/hour	0.35 grams/hour	0.43 grams/hour	-0.19 grams/hour
Emissions Factor		0.39 g/kg	0.48 g/kg	-0.11 g/kg
Difference from Average Total Particulate Emissions		0.15 grams	0.15 grams	
	Dual Train Comparison Results Are Acceptable			

FINAL AVERAGE RESULTS

Complete Test Run	
Total Particulate Emissions - E_T	1.41 grams
Particulate Emission Rate	**0.39 grams/hour**
Emissions Factor	0.44 grams/kg
First Hour Emissions	
Total Particulate Emissions - E_T	-0.19 grams
Particulate Emission Rate	-0.19 grams/hour
Emissions Factor	-0.11 grams/kg
7.5% of Average Total Particulate Emissions	0.11 grams

QUALITY CHECKS

Filter Temps < 90 °F	OK
Filter Face Velocity (47 mm)	OK
Dryer Exit Temp < 80F	OK
Leakage Rate	OK
Ambient Temp (55-90°F)	OK
Negative Probe Weight Eval.	OK
Pro-Rate Variation	OK
Stove Surface ΔT	OK
Train Precesion 7.5%	10.51
Train Precision 0.5g/kg	0.09

Technician Signature: 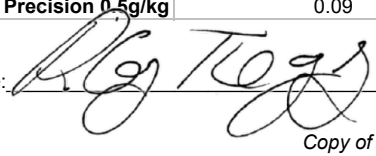

Wood Heater Lab Data - ASTM E2780 / ASTM E2515

Manufacturer: Hearth & Home
Model: Intrepiod IV
Tracking No.: 2264
Project No.: 0135WS038E
Run #: 3
Date: 12/21/17

Equipment Numbers:

Uncorrected

TRAIN 1 (First Hour emissions)

Sample Component	Reagent	Filter, Probe or Dish #	Weights		
			Final, mg	Tare, mg	Particulate, mg
B. Front filter catch	Filter	D360	111.2	111.2	0.0
C. Rear filter catch	Filter				0.0
D. Probe catch*	Probe				0.0
E. Filter seals catch*	Seals				0.0

Sub-Total Total Particulate, mg: 0.0

TRAIN 1 (Post First Hour Change-out)

Sample Component	Reagent	Filter, Probe or Dish #	Weights		
			Final, mg	Tare, mg	Particulate, mg
B. Front filter catch	Filter	D362	111.0	110.6	0.4
C. Rear filter catch	Filter	D361	110.8	110.8	0.0
D. Probe catch*	Probe	4	114858.5	114857.9	0.6
E. Filter seals catch*	Seals	R545	4155.6	4154.6	1.0

Sub-Total Total Particulate, mg: 2.0

Train 1 Aggregate Total Particulate, mg: **2.0**

TRAIN 2

Sample Component	Reagent	Filter, Probe or Dish #	Weights		
			Final, mg	Tare, mg	Particulate, mg
A. Front filter catch	Filter	D363	111.4	110.9	0.5
B. Rear filter catch	Filter	D364	111.0	111.0	0.0
C. Probe catch*	Probe	OES 5	113574.2	113573.4	0.8
D. Filter seals catch*	Seals	R546	3330.0	3329.6	0.4

Total Particulate, mg: **1.7**

AMBIENT

Sample Component	Reagent	Filter # or Probe #	Weights		
			Final, mg	Tare, mg	Particulate, mg
A. Front filter catch*	Filter				0.0

Total Particulate, mg: **0.0**

*Particulate catch that results in a negative number, is assumed to be zero for probes and seals, negative numbers for filters are assumed to be part of the seal weight.

Component	Equations:
A. Front filter catch	Final (mg) - Tare (mg) = Particulate, mg
B. Rear filter catch	Final (mg) - Tare (mg) = Particulate, mg
C. Probe catch	Final (mg) - Tare (mg) = Particulate, mg

Technician Signature:_____

OMNI-Test Laboratories, Inc.

Wood Heater Test Results - ASTM E2780 / ASTM E2515

Manufacturer: Hearth & Home
Model: Intrepiod IV
Project No.: 0135WS038E
Tracking No.: 2264
Run: 3
Test Date: 12/21/17

Burn Rate	**0.90 kg/hr dry**
Average Tunnel Temperature	89 degrees Fahrenheit
Average Gas Velocity in Dilution Tunnel - vs	13.67 feet/second
Average Gas Flow Rate in Dilution Tunnel - Qsd	9254.5 dscf/hour
Average Delta p	0.050 inches H20
Total Time of Test	216 minutes

Uncorrected

	AMBIENT	SAMPLE TRAIN 1	SAMPLE TRAIN 2	FIRST HOUR FILTER (TRAIN 1)
Total Sample Volume - Vm	0.000 cubic feet	35.262 cubic feet	35.097 cubic feet	9.707 cubic feet
Average Gas Meter Temperature	72 degrees Fahrenheit	81 degrees Fahrenheit	82 degrees Fahrenheit	78 degrees Fahrenheit
Total Sample Volume (Standard Conditions) - Vmstd	0.000 dscf	34.395 dscf	34.280 dscf	9.532 dscf
Total Particulates - m_n	0 mg	2 mg	1.7 mg	0 mg
Particulate Concentration (dry-standard) - C_f/C_s	0.000000 grams/dscf	0.00006 grams/dscf	0.00005 grams/dscf	0.00000 grams/dscf
Total Particulate Emissions - E_T	0.00 grams	1.94 grams	1.65 grams	0.00 grams
Particulate Emission Rate	0.00 grams/hour	0.54 grams/hour	0.46 grams/hour	0.00 grams/hour
Emissions Factor		0.60 g/kg	0.51 g/kg	0.00 g/kg
Difference from Average Total Particulate Emissions		0.14 grams	0.14 grams	

Dual Train Comparison Results Are Acceptable

FINAL AVERAGE RESULTS

Complete Test Run	
Total Particulate Emissions - E_T	1.79 grams
Particulate Emission Rate	**0.50 grams/hour**
Emissions Factor	0.56 grams/kg
First Hour Emissions	
Total Particulate Emissions - E_T	0.00 grams
Particulate Emission Rate	0.00 grams/hour
Emissions Factor	0.00 grams/kg
7.5% of Average Total Particulate Emissions	0.13 grams

QUALITY CHECKS

Filter Temps < 90 °F	OK
Filter Face Velocity (47 mm)	OK
Dryer Exit Temp < 80F	OK
Leakage Rate	OK
Ambient Temp (55-90°F)	OK
Negative Probe Weight Eval.	#DIV/0!
Pro-Rate Variation	OK
Stove Surface ΔT	OK
Train Precesion 7.5%	7.94
Train Precision 0.5g/kg	0.09

Technician Signature: _____

Wood Heater Efficiency Results - CSA B415.1

Manufacturer: Hearth & Home
Technician Signature:
Model: ~~Intrepiod IV~~ Intrepid IV - KJM 2/12/18
Date: 12/21/17
Run: 3
Control #: 0135WS038E
Test Duration: 216
Output Category: II

Test Results in Accordance with CSA B415.1-09

	HHV Basis	LHV Basis
Overall Efficiency	75.4%	81.5%
Combustion Efficiency	95.9%	95.9%
Heat Transfer Efficiency	79%	85.1%

Output Rate (kJ/h)	13,156	12,480	(Btu/h)
Burn Rate (kg/h)	0.88	1.94	(lb/h)
Input (kJ/h)	17,439	16,543	(Btu/h)

Test Load Weight (dry kg)	3.17	6.98	dry lb
MC wet (%)	16.84683186		
MC dry (%)	20.26		
Particulate (g)	0.39		
CO (g)	199		
Test Duration (h)	3.60		

Emissions	Particulate	CO
g/MJ Output	0.01	4.20
g/kg Dry Fuel	0.12	62.75
g/h	0.11	55.24
lb/MM Btu Output	0.02	9.76

Air/Fuel Ratio (A/F)	14.39

VERSION: 2.2 12/14/2009

OMNI-Test Laboratories, Inc. **ASTM E2780 Wood Heater Run Sheets**

Client: Hearth & Home Project Number: 0135WS038E Run Number: 3

Model: Intrepid IV Tracking Number: 2264 Date: 12/21/17

Test Crew: B Davis

OMNI Equipment ID numbers:

ASTM E2515 Lab Sheet

Assembled By:

B Davis

Date/Time in Dessicator:

12/22/17 0810

	Weighing #1	Weighing #2	Weighing #3	Weighing #4	Weighing #5
Date/Time:	1/4/18 0820	1/4/18 0850	1/5/18		
R/H %:	8.8	5.2	9.3		
Temp:	69.6	72.4	70.6		
200 mg Audit:	0.2000	0.2000	0.1999		
2 g Audit:	1.9998	1.9998	1.9999		
100 g Audit:	99.9978	99.9978	99.9981		
Initials:	DL	DL	DL		

Train	Element	ID #	Tare (mg)	Weight (mg)	Weight (mg)	Weight (mg)	Weight (mg)	Weight (mg)
A (First Hour)	Front Filter	D360	111.2	111.1	111.0 ✓			
	Rear Filter							
	Probe							
	O-Ring Set							
A (Remainder)	Front Filter	D362	110.6	111.0	111.0 ✓			
	Rear Filter	D361	110.8	110.2	110.5 ✓			
	Probe	4	114857.9	114858.3	114858.5 ✓			
	O-Ring Set	RS45	4154.6	4155.5	4155.6 ✓			
B	Front Filter	D363	110.9	111.3	111.4 ✓			
	Rear Filter	D364	111.0	110.7	110.9 ✓			
	Probe	OES5 ✓	113573.4	113574.0	113574.2 ✓			
	O-Ring Set	RS46	3329.6	3329.7	3330.2	3330.0	✓	
BG	Filter							

Technician Signature: B D

Date: 1/12/18

OMNI-Test Laboratories, Inc. **ASTM E2780 Wood Heater Run Sheets**

Client: Hearth & Home Project Number: 0135WS038E Run Number: 3

Model: Intrepid IV Tracking Number: 2264 Date: 12/21/17

Test Crew: B Davis

OMNI Equipment ID numbers:

Wood Heater Supplemental Data

Start Time: 14:51 Booth #: E1

Stop Time: 18:27

Stack Gas Leak Check:

Initial: good Final: good

Sample Train Leak Check:

A: 0.0 @ 6 "Hg

B: 0.0 @ 6 "Hg

Calibrations: Span Gas CO_2: 16.74 CO: 4.20% / 901 ppm

	Pre Test		Post Test	
	Zero	Span	Zero	Span
Time	1443	1443	1842	1842
CO_2	0.00	16.70	0.00	16.67
CO	0.000 / 0	4.214 / 899	0.000 / 0	4.209 / 891

Air Velocity (ft/min): Initial: <50 Final: <50

Scale Audit (lbs): Initial: 10.0 Final: 10.0

Pitot Tube Leak Test: Initial: 0.0 Final: 0.0

Stack Diameter (in): 6"

Induced Draft: 0.0

% Smoke Capture: 100%

Flue Pipe Cleaned Prior to First Test in Series:

Date: 12/19/17 Initials:

	Initial	Middle	Ending
P_b (in/Hg)	30.41	30.41	30.40
RH (%)	23.1	22.6	23.0
Ambient (°F)	71	72	70

Background Filter Volume: N/A

Tunnel Traverse		
Microtector Reading	dP (in H_2O)	T(°F)
1	.030	89
2	.046	89
3	.050	88
4	.044	88
1	.030	89
2	.044	89
3	.050	89
4	.034	89
Center:		
	.050	89

Tunnel Static Pressure (in H_2O):	
Beginning of Test	End of Test
-.19	-.19

Technician Signature: Date: 1/10/18

OMNI-Test Laboratories, Inc. **ASTM E2780 Wood Heater Run Sheets**

Client: Hearth & Home Project Number: 0135WS038E Run Number: 3

Model: Intrepid IV Tracking Number: 2264 Date: 12/21/17

Test Crew: B Davis

OMNI Equipment ID numbers:

Wood Heater Fuel Data

Fuel: Douglas fir, untreated and air dried, standard grade or better dimensional lumber

Pre-Burn Fuel

Calibration: Cal Value (1) = 12% Actual Reading 12
Cal Value (2) = 22% Actual Reading 22

Piece:	Length:	Reading:	Piece:	Length:	Reading:
1	36 in	22.6	7	in	
2	36 in	22.6	8	in	
	ft				
3	36 in	23.0	9	in	
4	36 in	20.2	10	in	
5	in		11	in	
6	in		12	in	

Total Pre-Burn Fuel Weight: 15.2 Pre-Burn Fuel Average Moisture: 22.0

Time (clock): 12:05 Room Temperature (F): 71 Initials: DA

Test Fuel

Firebox Volume (ft³): 1.3
Load Weight Range (lb): 8.25 - 9.17 - 10.08

Test Fuel Piece Length (in): 13.5
Total Wet Fuel Load Weight (lb): 8.4
1.7 - 2.1

Fuel Type & Amount: 2 x 4: 5 4 x 4: 0
Weight (with spacers): 8.4 Weight (with spacers): N/A

Piece:	Weight (lbs):	Moisture Readings (%DB):			Fuel Type:
1	1.3	20.3	22.3	19.5	2x4
2	1.3	21.5	19.8	19.0	2x4
3	1.5	20.1	19.3	20.1	2x4
4	~~1.7~~ 1.5	~~21.9~~ 20.6	~~20.4~~ 19.5	~~21.4~~ 20.3	2x4
5	1.3	21.5	20.2	19.9	2x4
6					
7					

Spacer Moisture Readings (%DB)

8.7	10.6	10.7	10.9	9.8			
8.3	7.9	8.6	8.1	7.8			
12.3	11.8	11.2	11.2				
9.2	10.6	9.4	6.0				

Technician Signature: 1425 Room Temperature (F): 71 Date: 12/21/17
Time (clock): Initials:

1/12/18

OMNI-Test Laboratories, Inc. **ASTM E2780 Wood Heater Run Sheets**

Client: Hearth & Home Project Number: 0135WS038E Run Number: 3

Model: Intrepid IV Tracking Number: 2264 Date: 12/21/17

Test Crew: B Davis

OMNI Equipment ID numbers:

Wood Heater Run Notes

Air Control Settings

Primary: Fully closed, Arm completly to the Right

Secondary: fixed

Tertiary/Pilot: N/A

Fan: N/A

Preburn Notes

Time	Notes
10	Raked coals
30	Raked coals
50	Raked coals
70	Raked coals
90	Raked coals
97	Removed 0.3 lbs of coals.. L
116	Leveled coal bed

Test Notes

Sketch test fuel configuration:

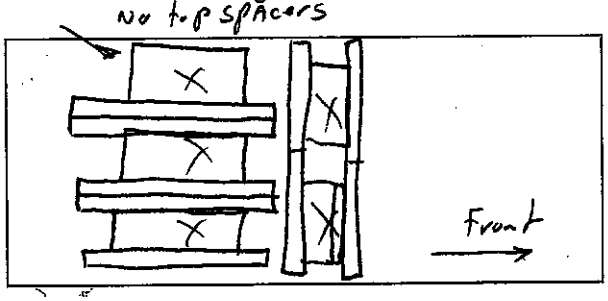

Start up procedures & Timeline:

Bypass: closed by 1:00 minute

Fuel loaded by: 50 seconds

Door closed at: 55 seconds

Primary air: At test setting entire test

Notes: N/A

Time	Notes
60	Changed front filter in train A
180	After 10 minutes at 0.7 lbs opened door and moved fuel to in front of the exit.

Technician Signature:

Date: 1/18/18

Run 4

Wood Heater Preburn Data - ASTM E2780

Intrepid IV - KJM 2/12/18

Run:	4

Technician Signature:

Manufacturer:	Hearth & Home
Model:	~~Intrepid IV~~
Tracking No.:	2264
Project No.:	0135WS038E
Test Date:	12/22/17
Beginning Clock Time:	7:48

Coal Bed Range (lb):	1.8 (min)	2.2 (max)

Preburn Fuel Data

Fuel Piece Lengths (in.):	6
Total Preburn Weight (lb):	15.1
Fuel Moisture Readings (% DB):	19.2
	22.8
	22.1
	20.6
Avg Preburn Moisture (% DB):	21.18

			Temperatures (°F)							
Elapsed Time (min)	Scale (lb)	Stack Draft (in H_2O)	FB Top	FB Bottom	FB Back	FB Left	FB Right	Avg. FB	Stack	Ambient
0	9.9	-0.083	495	145	515	229	256	328	850	70
1	9.6	-0.074	507	150	556	238	263	342.8	596	70
2	9.5	-0.068	499	156	581	246	270	350.4	508	69
3	9.4	-0.064	490	161	595	255	277	355.6	456	69
4	9.3	-0.06	481	167	605	262	284	359.8	424	69
5	9.2	-0.059	474	173	610	269	290	363.2	405	69
6	9.1	-0.058	467	178	614	275	295	365.8	395	69
7	9	-0.056	463	184	618	280	300	369	392	69
8	9	-0.056	458	189	622	284	304	371.4	384	69
9	8.9	-0.053	458	195	624	288	308	374.6	379	69
10	8.8	-0.053	462	200	624	292	311	377.8	374	69
11	8.6	-0.058	457	205	625	294	314	379	440	69
12	8.4	-0.061	458	210	646	297	317	385.6	431	69
13	8.3	-0.062	475	215	668	299	319	395.2	439	69
14	8.1	-0.061	492	219	690	301	322	404.8	445	70
15	8	-0.061	512	224	710	304	324	414.8	447	70
16	7.8	-0.06	527	228	728	306	326	423	450	70
17	7.7	-0.058	544	232	741	309	329	431	445	70
18	7.5	-0.06	558	236	751	312	332	437.8	441	70
19	7.4	-0.059	572	240	760	315	334	444.2	445	71
20	7.3	-0.06	583	243	766	318	337	449.4	441	70
21	7.1	-0.059	590	247	772	322	339	454	444	70
22	7	-0.058	598	250	778	324	341	458.2	446	70
23	6.9	-0.055	606	253	782	328	344	462.6	443	70
24	6.7	-0.053	619	256	770	331	346	464.4	409	70
25	6.6	-0.052	633	259	757	334	348	466.2	393	70
26	6.5	-0.051	643	261	743	338	351	467.2	381	70
27	6.3	-0.048	651	263	729	341	354	467.6	372	70
28	6.2	-0.049	658	265	715	345	357	468	365	70
29	6.1	-0.047	665	267	702	348	359	468.2	358	70
30	5.9	-0.047	670	269	689	352	362	468.4	351	70
31	5.7	-0.064	666	271	679	355	365	467.2	706	71
32	5.4	-0.061	666	272	687	359	368	470.4	491	71
33	5.2	-0.06	674	274	697	363	370	475.6	456	71
34	5.1	-0.06	680	275	711	368	372	481.2	448	72
35	4.9	-0.059	681	276	726	373	375	486.2	446	71
36	4.8	-0.058	682	277	742	377	377	491	448	71
37	4.6	-0.059	682	279	759	382	380	496.4	448	71
38	4.5	-0.059	683	280	775	386	382	501.2	451	71

Wood Heater Preburn Data - ASTM E2780

Intrepid IV - KJM 2/12/18

Run:	4

Technician Signature:

Manufacturer:	Hearth & Home
Model:	~~Intrepiod IV~~
Tracking No.:	2264
Project No.:	0135WS038E
Test Date:	12/22/17
Beginning Clock Time:	7:48

Coal Bed Range (lb):	1.8 (min)	2.2 (max)

Preburn Fuel Data

Fuel Piece Lengths (in.):	6
Total Preburn Weight (lb):	15.1
Fuel Moisture Readings (% DB):	19.2
	22.8
	22.1
	20.6
Avg Preburn Moisture (% DB):	21.18

			Temperatures (°F)							
Elapsed Time (min)	Scale (lb)	Stack Draft (in H_2O)	FB Top	FB Bottom	FB Back	FB Left	FB Right	Avg. FB	Stack	Ambient
39	4.3	-0.06	688	281	791	390	385	507	453	72
40	4.2	-0.06	692	282	806	394	386	512	453	72
41	4.1	-0.059	697	283	819	397	388	516.8	453	71
42	4	-0.058	703	284	831	400	390	521.6	452	72
43	3.9	-0.058	704	285	840	403	392	524.8	449	72
44	3.7	-0.057	700	286	848	405	394	526.6	449	72
45	3.6	-0.057	693	287	852	408	396	527.2	446	72
46	3.6	-0.058	688	288	852	410	398	527.2	439	71
47	3.5	-0.055	684	289	853	415	399	528	433	72
48	3.4	-0.056	683	290	851	422	401	529.4	428	72
49	3.3	-0.055	682	291	848	427	402	530	424	72
50	3.2	-0.055	677	293	846	432	403	530.2	421	72
51	3.1	-0.055	659	294	835	435	405	525.6	466	72
52	3	-0.054	643	296	838	440	406	524.6	429	72
53	3	-0.051	636	297	835	444	407	523.8	415	72
54	2.9	-0.052	629	299	830	447	408	522.6	406	72
55	2.9	-0.05	623	300	824	447	409	520.6	396	72
56	2.8	-0.049	616	302	818	447	409	518.4	392	72
57	2.8	-0.048	609	303	812	448	411	516.6	388	72
58	2.7	-0.046	603	305	802	448	412	514	381	72
59	2.7	-0.046	600	307	792	449	413	512.2	377	72
60	2.7	-0.046	595	308	782	449	413	509.4	371	72
61	2.6	-0.047	591	310	771	449	414	507	368	72
62	2.6	-0.046	588	312	760	449	415	504.8	364	72
63	2.6	-0.045	584	314	750	449	416	502.6	359	72
64	2.5	-0.044	581	316	739	449	417	500.4	358	72
65	2.5	-0.044	577	318	729	449	418	498.2	355	72
66	2.5	-0.043	574	320	720	448	418	496	353	72
67	2.4	-0.042	571	323	709	448	419	494	349	72
68	2.4	-0.042	565	325	699	447	420	491.2	348	72
69	2.4	-0.041	561	328	690	446	421	489.2	345	72
70	2.3	-0.042	559	330	681	446	421	487.4	341	72
71	2.3	-0.04	552	332	671	444	421	484	348	73
72	2.3	-0.041	553	335	664	444	422	483.6	336	72
73	2.3	-0.04	555	338	658	443	422	483.2	331	72
74	2.2	-0.039	557	340	651	442	423	482.6	330	72
75	2.2	-0.04	557	343	647	442	423	482.4	326	72
76	2.2	-0.039	558	345	641	441	424	481.8	325	72
77	2.2	-0.038	559	347	636	441	424	481.4	323	72

Wood Heater Preburn Data - ASTM E2780

Intrepid IV - KJM 2/12/18

Run:	4

Technician Signature:

Manufacturer:	Hearth & Home
Model:	~~Intrepiod IV~~
Tracking No.:	2264
Project No.:	0135WS038E
Test Date:	12/22/17
Beginning Clock Time:	7:48

Coal Bed Range (lb):	1.8 (min)	2.2 (max)

Preburn Fuel Data

Fuel Piece Lengths (in.):	6
Total Preburn Weight (lb):	15.1
Fuel Moisture Readings (% DB):	19.2
	22.8
	22.1
	20.6
Avg Preburn Moisture (% DB):	21.18

			Temperatures (°F)							
Elapsed Time (min)	Scale (lb)	Stack Draft (in H_2O)	FB Top	FB Bottom	FB Back	FB Left	FB Right	Avg. FB	Stack	Ambient
78	2.1	-0.038	559	349	632	440	425	481	322	72

Wood Heater Test Fuel Data - ASTM E2780

Manufacturer:	**Hearth & Home**
Model:	~~Intrepid IV~~ Intrepid IV - KJM 2/12/18
Tracking No.:	**2264**
Project No.:	**0135WS038E**
Test Date:	**12/22/2017**
Run No.:	**4**

Firebox Volume (ft^3):	**1.31**
Fuel Piece Length (in):	**13**
2x4 Crib Weight (lb):	**8.8**
4x4 Crib Weight (lb):	**0**

Total Fuel Weight (Dry Basis, lb):	**7.4**	
Fuel Density (lb/ft^3, Dry Basis):	**28.59**	**OK**
Loading Density (lb/ft^3, Wet Basis):	**6.72**	**OK**
2x4 Percentage:	**N/A**	**N/A**

Coal Bed Range (20-25%): 1.76 - 2.2

Test Fuel Piece	Weight (lb)	Size	Readings (Dry Basis %)			Dry Weight (lb)
1	1.3	2"x 4"	20.4	21.6	20.1	1.08
2	1.5	2"x 4"	19.3	21.4	20.6	1.25
3	1.2	2"x 4"	19.1	19.3	19.7	1.01
4	1.4	2"x 4"	19.3	20.4	20.4	1.17
5	1.4	2"x 4"	21.6	21.4	21.6	1.15

Spacer Readings (Dry Basis %)			
17.8	13.1		
15.6	15.8		
17.6	16.7		
12.9	18.2		
19.3	18.1		
18.2			
15.8			
18.7			
16.5			
18.6			
10.4			
18.8			
19.6			

Technician Signature: 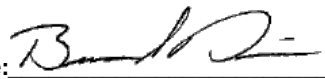

Wood Heater Test Data - ASTM E2780 / ASTM E2515

Intrepid IV - KJM 2/12/18

Run: 4

Manufacturer: Hearth & Home
Model: ~~Intrepid IV~~
Tracking No.: 2264
Project No.: 0135WS038E
Test Date: 22-Dec-17
Beginning Clock Time: 09:07

Total Sampling Time: 151 min
Recording Interval: 1 min
Background Sample Volume: _____ cubic feet

Meter Box Y Factor: 0.981 (1) 0.984 (2) _____ (Amb)

Barometric Pressure:	Begin	Middle	End	Average
	30.33	30.33	30.32	30.33 "Hg

OMNI Equipment Numbers: _____

PM Control Modules: 335, 00336
Dilution Tunnel MW(dry): 29.00 lb/lb-mole
Dilution Tunnel MW(wet): 28.78 lb/lb-mole
Dilution Tunnel H2O: 2.00 percent
Dilution Tunnel Static: -0.180 "H2O
Tunnel Area: 0.19635 ft2
Pitot Tube Cp: 0.99

Avg. Tunnel Velocity: 13.66 ft/sec.
Initial Tunnel Flow: 149.2 scfm
Average Tunnel Flow: 151.0 scfm
Post-Test Leak Check (1): 0.000 cfm @ 6 in. Hg
Post-Test Leak Check (2): 0.000 cfm @ 5 in. Hg
Average Test Piece Fuel Moisture: 20.41 Dry Basis %

Technician Signature: _____

Velocity Traverse Data	Pt.1	Pt.2	Pt.3	Pt.4	Pt.5	Pt.6	Pt.7	Pt.8	Center	
Initial dP	0.034	0.046	0.048	0.032	0.030	0.046	0.050	0.034	0.050	"H2O
Temp:	99	98	97	97	97	97	97	96	98	°F

V_{strav} 13.65 ft/sec V_{scent} 15.13 ft/sec F_p 0.902

	Particulate Sampling Data														Fuel Weight (lb)		Temperature Data (°F)												Stack Gas Data		
Elapsed Time (min)	Gas Meter 1 (ft^3)	Gas Meter 2 (ft^3)	Sample Rate 1 (cfm)	Sample Rate 2 (cfm)	Orifice dH 1 ("H_2O)	Meter 1 Temp (°F)	Meter 1 Vacuum ("Hg)	Orifice dH 2 ("H_2O)	Meter 2 Temp (°F)	Meter 2 Vacuum ("Hg)	Dilution Tunnel (°F)	Dilution Tunnel Center dP	Pro. Rate 1	Pro. Rate 2	Scale Reading	Weight Change	Firebox Top	Firebox Bottom	Firebox Back	Firebox Left	Firebox Right	Avg. Stove Surface	Fierbox Internal	Stack	Filter 1	Dryer Exit 1	Filter 2	Dryer Exit 2	Ambient	Draft ("H_2O)	CO_2 (%)	CO (%)
0	0.000	0.000			1.20	74	1.89	0.96	75	1.1	111	0.050			8.8		555	351	623	440	425	479	952	311	73	76	73	76	73	-0.036	3.18	0.14
1	0.159	0.153	0.16	0.15	1.33	74	1.99	1.09	75	1.1	138	0.050	102	98	8.8	0	541	350	614	439	426	474	982	294	74	77	74	77	73	-0.070	5.89	0.06
2	0.321	0.313	0.16	0.16	1.33	74	1.97	1.08	75	1.1	107	0.050	101	100	8.6	-0.2	515	350	614	437	426	468	1053	298	74	78	74	77	73	-0.040	5.64	0.06
3	0.482	0.471	0.16	0.16	1.33	74	1.97	1.08	75	1.1	100	0.050	100	98	8.6	0	495	351	616	434	425	464	1082	305	74	78	74	77	72	-0.042	7.34	0.07
4	0.643	0.633	0.16	0.16	1.34	75	1.98	1.16	76	1.2	98	0.050	99	100	8.5	-0.1	481	351	619	432	423	461	1092	311	74	78	74	77	72	-0.042	7.52	0.1
5	0.805	0.797	0.16	0.16	1.34	75	1.98	1.15	76	1.2	98	0.050	100	101	8.4	-0.1	467	351	622	430	422	458	1103	319	74	78	74	77	72	-0.043	7.66	0.26
6	0.967	0.960	0.16	0.16	1.33	75	1.98	1.15	76	1.2	98	0.050	100	101	8.3	-0.1	458	350	627	427	420	456	1111	325	74	78	74	77	72	-0.045	7.74	0.38
7	1.128	1.124	0.16	0.16	1.33	75	1.97	1.15	76	1.2	97	0.050	99	101	8.2	-0.1	449	350	631	424	418	454	1130	332	74	78	74	77	72	-0.044	7.94	0.34
8	1.291	1.287	0.16	0.16	1.54	75	2.12	1.13	76	1.2	98	0.050	100	101	8.1	-0.1	454	350	638	420	414	455	1157	336	74	78	74	77	72	-0.045	9.04	0.36
9	1.452	1.449	0.16	0.16	1.34	75	1.99	1.13	76	1.2	98	0.050	99	100	8.0	-0.1	463	350	643	417	412	457	1122	340	74	78	74	77	72	-0.047	8.17	0.51
10	1.614	1.611	0.16	0.16	1.34	75	1.99	1.13	76	1.2	98	0.050	100	100	7.9	-0.1	467	348	646	413	409	457	1080	342	74	78	74	77	72	-0.048	7.35	0.87
11	1.777	1.774	0.16	0.16	1.34	75	1.98	1.13	76	1.2	99	0.050	100	101	7.8	-0.1	494	348	648	410	406	461	1049	341	74	77	74	76	72	-0.047	8.31	1.56
12	1.939	1.936	0.16	0.16	1.34	76	1.99	1.12	77	1.2	99	0.050	100	100	7.6	-0.2	517	348	655	408	403	466	1263	354	74	78	74	77	72	-0.051	11.05	0.41
13	2.100	2.097	0.16	0.16	1.33	76	2	1.13	77	1.1	100	0.050	99	100	7.5	-0.1	520	346	663	406	400	467	1258	364	74	78	75	77	72	-0.050	10.21	0.69
14	2.263	2.259	0.16	0.16	1.35	76	2.01	1.13	77	1.2	101	0.050	100	100	7.3	-0.2	522	346	673	403	397	468	1346	376	75	78	75	76	72	-0.053	12.78	0.05
15	2.425	2.422	0.16	0.16	1.35	76	2.01	1.12	77	1.2	102	0.050	100	101	7.2	-0.1	533	345	687	401	394	472	1399	389	75	78	75	77	72	-0.053	13.25	0.03
16	2.587	2.583	0.16	0.16	1.35	76	2	1.12	77	1.2	103	0.050	100	100	7.0	-0.2	545	344	702	398	391	476	1410	395	75	78	75	77	72	-0.055	13.63	0.04
17	2.750	2.744	0.16	0.16	1.35	76	2	1.12	77	1.2	103	0.050	101	100	6.9	-0.1	564	343	717	395	388	481	1398	401	75	78	75	77	72	-0.054	13.33	0.02
18	2.913	2.906	0.16	0.16	1.35	77	2.01	1.12	77	1.2	103	0.050	100	100	6.7	-0.2	585	342	730	393	386	487	1398	402	75	78	75	77	72	-0.054	13.26	0.02
19	3.076	3.069	0.16	0.16	1.34	77	2	1.12	78	1.2	104	0.050	101	101	6.6	-0.1	602	340	744	391	384	492	1456	406	75	78	75	77	72	-0.055	13.81	0.03
20	3.237	3.230	0.16	0.16	1.34	77	2	1.12	78	1.2	105	0.050	99	100	6.4	-0.2	616	340	758	390	381	497	1455	411	75	78	75	77	72	-0.056	13.67	0.02
21	3.400	3.391	0.16	0.16	1.35	77	2.01	1.12	78	1.2	105	0.050	101	100	6.3	-0.1	626	339	771	388	379	501	1466	414	75	78	75	77	72	-0.056	13.63	0.02
22	3.562	3.553	0.16	0.16	1.35	77	2	1.12	78	1.2	105	0.050	100	100	6.1	-0.2	634	338	784	387	377	504	1492	422	75	78	75	77	72	-0.057	14.2	0.05
23	3.725	3.716	0.16	0.16	1.35	77	2	1.12	78	1.2	106	0.050	101	101	5.9	-0.2	645	336	798	386	375	508	1504	424	75	78	75	77	72	-0.057	14.2	0.08
24	3.888	3.877	0.16	0.16	1.34	78	2	1.11	78	1.2	107	0.050	101	100	5.8	-0.1	654	335	810	385	374	512	1518	429	75	78	75	77	72	-0.058	14.25	0.12
25	4.050	4.038	0.16	0.16	1.35	78	2	1.12	79	1.2	107	0.050	100	100	5.6	-0.2	664	334	821	384	372	515	1532	429	75	79	75	77	72	-0.057	14.36	0.24
26	4.213	4.200	0.16	0.16	1.34	78	2	1.12	79	1.2	107	0.050	101	100	5.5	-0.1	673	333	832	383	372	519	1545	428	75	79	75	77	72	-0.059	14.42	0.46
27	4.375	4.363	0.16	0.16	1.34	78	1.99	1.12	79	1.2	107	0.050	100	101	5.3	-0.2	678	332	843	383	370	521	1554	430	75	79	76	77	72	-0.058	14.36	0.51
28	4.537	4.524	0.16	0.16	1.34	78	2	1.12	79	1.2	107	0.050	100	100	5.2	-0.1	685	330	853	383	370	524	1562	431	76	79	76	77	72	-0.057	14.41	0.38
29	4.700	4.685	0.16	0.16	1.34	78	2	1.12	79	1.2	107	0.050	101	100	5.0	-0.2	689	329	863	382	369	526	1565	431	76	79	76	77	72	-0.058	14.27	0.26
30	4.863	4.847	0.16	0.16	1.35	79	2	1.12	79	1.2	107	0.050	100	100	4.9	-0.1	692	328	871	381	369	528	1570	431	76	79	76	78	72	-0.058	14.26	0.13
31	5.027	5.010	0.16	0.16	1.34	79	2	1.15	80	1.2	107	0.050	101	101	4.8	-0.1	694	327	879	381	368	530	1570	430	76	79	76	78	72	-0.058	14.18	0.07
32	5.189	5.174	0.16	0.16	1.33	79	2	1.13	80	1.2	108	0.050	100	102	4.6	-0.2	697	326	885	381	368	531	1575	431	76	79	76	78	72	-0.058	14.11	0.05
33	5.352	5.336	0.16	0.16	1.34	79	2	1.14	80	1.2	107	0.050	100	100	4.5	-0.1	695	325	892	381	368	532	1576	429	76	80	76	78	72	-0.057	14.26	0.05
34	5.514	5.499	0.16	0.16	1.34	79	2	1.14	80	1.2	108	0.050	100	101	4.4	-0.1	693	324	897	382	368	533	1573	427	76	80	76	78	72	-0.057	13.97	0.07
35	5.677	5.662	0.16	0.16	1.34	79	1.99	1.14	80	1.2	107	0.050	100	101	4.2	-0.2	685	323	901	382	368	532	1568	426	76	80	76	78	73	-0.057	13.81	0.06
36	5.840	5.826	0.16	0.16	1.35	79	1.99	1.14	80	1.2	107	0.050	100	101	4.1	-0.1	682	322	905	382	368	532	1570	425	76	80	76	78	72	-0.059	13.95	0.11

Wood Heater Test Data - ASTM E2780 / ASTM E2515

Intrepid IV - KJM 2/12/18

Run: 4

Manufacturer: Hearth & Home
Model: ~~Intrepid IV~~
Tracking No.: 2264
Project No.: 0135WS038E
Test Date: 22-Dec-17
Beginning Clock Time: 09:07

Total Sampling Time: 151 min
Recording Interval: 1 min
Background Sample Volume: _____ cubic feet

Meter Box Y Factor: 0.981 (1) 0.984 (2) _____ (Amb)

Barometric Pressure:	Begin	Middle	End	Average
	30.33	30.33	30.32	30.33 "Hg

OMNI Equipment Numbers: _____

PM Control Modules: 335, 00336
Dilution Tunnel MW(dry): 29.00 lb/lb-mole
Dilution Tunnel MW(wet): 28.78 lb/lb-mole
Dilution Tunnel H2O: 2.00 percent
Dilution Tunnel Static: -0.180 "H2O
Tunnel Area: 0.19635 ft2
Pitot Tube Cp: 0.99

Avg. Tunnel Velocity: 13.66 ft/sec.
Initial Tunnel Flow: 149.2 scfm
Average Tunnel Flow: 151.0 scfm
Post-Test Leak Check (1): 0.000 cfm @ 6 in. Hg
Post-Test Leak Check (2): 0.000 cfm @ 5 in. Hg
Average Test Piece Fuel Moisture: 20.41 Dry Basis %

Technician Signature: _____

Velocity Traverse Data	Pt.1	Pt.2	Pt.3	Pt.4	Pt.5	Pt.6	Pt.7	Pt.8	Center	
Initial dP	0.034	0.046	0.048	0.032	0.030	0.046	0.050	0.034	0.050	"H2O
Temp:	99	98	97	97	97	97	97	96	98	°F

V_{strav} 13.65 ft/sec V_{scent} 15.13 ft/sec F_p 0.902

	Particulate Sampling Data														Fuel Weight (lb)		Temperature Data (°F)												Stack Gas Data		
Elapsed Time (min)	Gas Meter 1 (ft^3)	Gas Meter 2 (ft^3)	Sample Rate 1 (cfm)	Sample Rate 2 (cfm)	Orifice dH 1 ("H_2O)	Meter 1 Temp (°F)	Meter 1 Vacuum ("Hg)	Orifice dH 2 ("H_2O)	Meter 2 Temp (°F)	Meter 2 Vacuum ("Hg)	Dilution Tunnel (°F)	Dilution Tunnel Center dP	Pro. Rate 1	Pro. Rate 2	Scale Reading	Weight Change	Firebox Top	Firebox Bottom	Firebox Back	Firebox Left	Firebox Right	Avg. Stove Surface	Fierbox Internal	Stack	Filter 1	Dryer Exit 1	Filter 2	Dryer Exit 2	Ambient	Draft ("H_2O)	CO_2 (%)	CO (%)
37	6.003	5.989	0.16	0.16	1.34	80	2	1.13	80	1.2	108	0.050	100	101	4.0	-0.1	674	321	909	382	368	531	1562	422	76	80	76	78	72	-0.058	13.88	0.09
38	6.167	6.151	0.16	0.16	1.34	80	2	1.13	81	1.2	107	0.050	101	100	3.8	-0.2	672	320	910	383	369	531	1549	423	76	80	76	78	73	-0.056	13.49	0.06
39	6.330	6.314	0.16	0.16	1.34	80	2	1.13	81	1.2	108	0.050	100	101	3.7	-0.1	671	319	912	384	369	531	1557	422	76	80	76	78	73	-0.057	13.81	0.1
40	6.493	6.477	0.16	0.16	1.34	80	1.99	1.13	81	1.2	108	0.050	100	101	3.6	-0.1	670	318	915	385	370	532	1573	424	76	80	76	78	73	-0.057	13.91	0.25
41	6.655	6.641	0.16	0.16	1.34	80	2	1.14	81	1.2	107	0.050	100	101	3.5	-0.1	671	317	919	386	371	533	1582	426	76	80	76	79	72	-0.057	14.14	0.55
42	6.818	6.804	0.16	0.16	1.34	80	2	1.13	81	1.2	108	0.050	100	101	3.3	-0.2	676	316	923	387	373	535	1586	428	76	80	77	79	72	-0.057	14.11	0.64
43	6.981	6.966	0.16	0.16	1.34	80	1.99	1.14	81	1.2	107	0.050	100	100	3.2	-0.1	678	315	926	389	374	536	1586	430	76	80	77	79	72	-0.058	14.33	0.61
44	7.147	7.132	0.17	0.17	1.34	80	2	1.14	81	1.2	108	0.050	102	103	3.1	-0.1	684	315	928	391	376	539	1588	433	76	81	77	79	72	-0.058	14.18	0.91
45	7.310	7.295	0.16	0.16	1.34	81	2	1.14	81	1.2	107	0.050	100	101	3.0	-0.1	686	314	930	392	377	540	1588	433	76	81	77	79	73	-0.058	14.4	0.92
46	7.474	7.459	0.16	0.16	1.35	81	2	1.14	82	1.2	108	0.050	101	101	2.8	-0.2	693	313	932	394	378	542	1591	431	76	81	77	79	73	-0.057	13.87	1.02
47	7.637	7.622	0.16	0.16	1.34	81	2	1.13	82	1.2	107	0.050	100	100	2.7	-0.1	698	312	934	396	380	544	1586	430	76	81	77	79	73	-0.057	13.9	1
48	7.800	7.785	0.16	0.16	1.35	81	1.99	1.13	82	1.2	108	0.050	100	101	2.6	-0.1	701	311	935	398	383	546	1583	428	76	81	77	79	73	-0.056	13.87	1.11
49	7.964	7.948	0.16	0.16	1.33	81	2	1.13	82	1.2	108	0.050	101	101	2.5	-0.1	704	310	935	400	385	547	1586	427	76	81	77	79	73	-0.058	13.9	1.06
50	8.127	8.111	0.16	0.16	1.34	81	2	1.14	82	1.2	108	0.050	100	101	2.4	-0.1	707	310	936	402	386	548	1590	428	77	81	77	79	73	-0.057	13.73	0.97
51	8.290	8.275	0.16	0.16	1.35	81	2	1.14	82	1.2	108	0.050	100	101	2.2	-0.2	707	309	937	404	388	549	1583	427	77	81	77	79	73	-0.056	13.7	0.89
52	8.453	8.439	0.16	0.16	1.35	81	2	1.13	82	1.2	107	0.050	100	101	2.1	-0.1	709	309	937	406	390	550	1565	422	77	81	77	79	73	-0.056	13.34	0.62
53	8.616	8.602	0.16	0.16	1.35	81	2	1.13	82	1.2	107	0.050	100	100	2.0	-0.1	709	307	936	408	392	550	1551	422	77	81	77	79	73	-0.053	13.43	0.4
54	8.780	8.765	0.16	0.16	1.35	81	2	1.14	83	1.2	106	0.050	101	100	1.9	-0.1	708	307	933	410	394	550	1522	417	77	81	77	79	73	-0.055	12.91	0.17
55	8.944	8.928	0.16	0.16	1.35	81	1.99	1.13	83	1.2	106	0.050	101	100	1.9	0	708	306	929	411	396	550	1489	412	77	81	77	79	73	-0.053	12.27	0.14
56	9.108	9.091	0.16	0.16	1.35	82	2	1.13	83	1.2	106	0.050	100	100	1.8	-0.1	706	306	925	413	398	550	1446	407	77	81	77	79	73	-0.051	11.88	0.03
57	9.271	9.256	0.16	0.17	1.34	82	1.99	1.13	83	1.2	105	0.050	100	101	1.7	-0.1	707	306	917	415	399	549	1385	402	77	81	77	79	73	-0.051	10.63	0.01
58	9.435	9.419	0.16	0.16	1.34	82	2	1.14	83	1.2	105	0.050	100	100	1.7	0	703	305	908	416	401	547	1340	398	77	81	77	79	73	-0.053	9.82	0.02
59	9.598	9.582	0.16	0.16	1.34	82	2	1.13	83	1.2	105	0.050	100	100	1.6	-0.1	704	304	897	418	403	545	1291	395	76	81	77	79	72	-0.051	8.92	0.06
60	9.762	9.745	0.16	0.16	1.34	82	1.99	1.14	83	1.2	104	0.050	100	100	1.6	0	702	304	886	420	405	543	1242	390	76	81	77	79	73	-0.050	8.35	0.24
61	9.928	9.909	0.17	0.16	1.35	82	1.98	1.14	83	1.2	104	0.050	101	101	1.5	-0.1	704	304	873	421	406	542	1192	384	77	81	77	79	73	-0.050	7.63	0.39
62	10.092	10.073	0.16	0.16	1.36	82	1.98	1.14	83	1.2	103	0.050	100	101	1.5	0	697	303	859	422	408	538	1164	380	78	81	77	79	73	-0.049	7.26	0.41
63	10.256	10.237	0.16	0.16	1.36	82	1.98	1.14	83	1.2	103	0.050	100	101	1.5	0	693	302	845	423	409	534	1127	374	79	81	77	79	73	-0.048	6.94	0.42
64	10.420	10.401	0.16	0.16	1.36	82	1.98	1.13	83	1.2	103	0.050	100	101	1.4	-0.1	687	302	830	424	411	531	1082	370	79	81	77	79	73	-0.047	6.3	0.61
65	10.585	10.564	0.17	0.16	1.36	82	1.98	1.14	83	1.2	101	0.050	101	100	1.4	0	675	301	815	424	411	525	1063	367	79	81	77	79	73	-0.047	6.32	0.47
66	10.750	10.728	0.16	0.16	1.36	82	1.98	1.14	83	1.2	101	0.050	101	100	1.4	0	666	301	801	425	413	521	1046	361	78	81	77	79	73	-0.047	6.35	0.42
67	10.914	10.891	0.16	0.16	1.36	82	1.97	1.14	84	1.2	101	0.050	100	100	1.4	0	656	300	787	426	413	516	1022	359	78	81	77	79	73	-0.045	6.29	0.43
68	11.079	11.056	0.17	0.16	1.35	82	1.98	1.13	84	1.2	101	0.050	101	101	1.3	-0.1	652	299	774	427	413	513	1006	356	78	80	77	79	73	-0.046	6.35	0.42
69	11.243	11.220	0.16	0.16	1.35	82	1.98	1.14	84	1.2	101	0.050	100	100	1.3	0	647	299	761	427	414	510	997	352	78	80	77	79	73	-0.044	6.29	0.42
70	11.408	11.383	0.16	0.16	1.35	82	1.98	1.14	84	1.2	100	0.050	101	99	1.3	0	642	298	749	428	414	506	975	352	78	80	76	79	73	-0.045	6.25	0.45
71	11.572	11.547	0.16	0.16	1.35	83	1.98	1.14	84	1.2	100	0.050	100	100	1.3	0	636	298	738	428	414	503	961	348	78	80	76	79	73	-0.044	6.16	0.47
72	11.736	11.710	0.16	0.16	1.35	83	1.98	1.14	84	1.2	99	0.050	100	99	1.2	-0.1	635	298	727	428	414	500	945	347	77	80	76	79	73	-0.044	6.09	0.48
73	11.901	11.874	0.16	0.16	1.35	83	1.97	1.14	84	1.2	99	0.050	100	100	1.2	0	630	298	716	429	415	498	934	343	77	80	76	79	73	-0.042	6.09	0.51

Wood Heater Test Data - ASTM E2780 / ASTM E2515

Intrepid IV - KJM 2/12/18

Run: 4

Manufacturer: Hearth & Home
Model: ~~Intrepid IV~~
Tracking No.: 2264
Project No.: 0135WS038E
Test Date: 22-Dec-17
Beginning Clock Time: 09:07

Total Sampling Time: 151 min
Recording Interval: 1 min
Background Sample Volume: _____ cubic feet

Meter Box Y Factor: 0.981 (1) 0.984 (2) _____ (Amb)

Barometric Pressure:	Begin	Middle	End	Average
	30.33	30.33	30.32	30.33 "Hg

OMNI Equipment Numbers: _____

PM Control Modules: 335, 00336
Dilution Tunnel MW(dry): 29.00 lb/lb-mole
Dilution Tunnel MW(wet): 28.78 lb/lb-mole
Dilution Tunnel H2O: 2.00 percent
Dilution Tunnel Static: -0.180 "H2O
Tunnel Area: 0.19635 ft2
Pitot Tube Cp: 0.99

Avg. Tunnel Velocity: 13.66 ft/sec.
Initial Tunnel Flow: 149.2 scfm
Average Tunnel Flow: 151.0 scfm
Post-Test Leak Check (1): 0.000 cfm @ 6 in. Hg
Post-Test Leak Check (2): 0.000 cfm @ 5 in. Hg
Average Test Piece Fuel Moisture: 20.41 Dry Basis %

Technician Signature: _____

Velocity Traverse Data	Pt.1	Pt.2	Pt.3	Pt.4	Pt.5	Pt.6	Pt.7	Pt.8	Center	
Initial dP	0.034	0.046	0.048	0.032	0.030	0.046	0.050	0.034	0.050	"H2O
Temp:	99	98	97	97	97	97	97	96	98	°F

V_{strav} 13.65 ft/sec V_{scent} 15.13 ft/sec F_p 0.902

	Particulate Sampling Data														Fuel Weight (lb)		Temperature Data (°F)												Stack Gas Data		
Elapsed Time (min)	Gas Meter 1 (ft^3)	Gas Meter 2 (ft^3)	Sample Rate 1 (cfm)	Sample Rate 2 (cfm)	Orifice dH 1 ("H_2O)	Meter 1 Temp (°F)	Meter 1 Vacuum ("Hg)	Orifice dH 2 ("H_2O)	Meter 2 Temp (°F)	Meter 2 Vacuum ("Hg)	Dilution Tunnel (°F)	Dilution Tunnel Center dP	Pro. Rate 1	Pro. Rate 2	Scale Reading	Weight Change	Firebox Top	Firebox Bottom	Firebox Back	Firebox Left	Firebox Right	Avg. Stove Surface	Fierbox Internal	Stack	Filter 1	Dryer Exit 1	Filter 2	Dryer Exit 2	Ambient	Draft ("H_2O)	CO_2 (%)	CO (%)
74	12.065	12.039	0.16	0.16	1.36	83	1.97	1.14	84	1.2	99	0.050	100	101	1.2	0	626	298	705	429	414	494	923	340	77	80	76	79	73	-0.042	6.11	0.52
75	12.229	12.203	0.16	0.16	1.35	83	1.97	1.14	84	1.2	99	0.050	100	100	1.2	0	626	298	696	430	414	493	911	341	77	80	76	79	73	-0.042	6.22	0.54
76	12.394	12.367	0.17	0.16	1.36	83	1.97	1.14	84	1.2	99	0.050	100	100	1.2	0	623	297	687	430	414	490	897	337	77	79	76	78	73	-0.042	5.96	0.55
77	12.558	12.530	0.16	0.16	1.36	83	1.98	1.14	84	1.2	99	0.050	100	99	1.2	0	621	298	677	430	414	488	886	334	77	79	76	78	73	-0.041	5.94	0.54
78	12.723	12.694	0.17	0.16	1.36	83	1.97	1.14	84	1.2	98	0.050	100	100	1.1	-0.1	619	298	669	430	413	486	867	334	77	79	76	78	73	-0.042	5.79	0.54
79	12.888	12.858	0.16	0.16	1.36	83	1.97	1.14	84	1.2	99	0.050	100	100	1.1	0	615	298	660	430	413	483	850	333	77	79	76	78	72	-0.040	5.35	0.53
80	13.052	13.022	0.16	0.16	1.36	83	1.98	1.14	84	1.2	98	0.050	100	100	1.1	0	611	298	651	430	412	480	836	328	77	79	76	78	73	-0.040	5.14	0.57
81	13.218	13.187	0.17	0.16	1.35	83	1.97	1.14	84	1.2	98	0.050	101	100	1.1	0	607	298	643	429	412	478	825	327	76	79	76	78	73	-0.039	5.18	0.62
82	13.383	13.351	0.16	0.16	1.36	83	1.97	1.14	84	1.2	97	0.050	100	100	1.1	0	600	298	635	428	412	475	816	325	76	79	76	78	73	-0.040	5.22	0.64
83	13.547	13.514	0.16	0.16	1.36	83	1.98	1.14	84	1.2	97	0.050	99	99	1.1	0	596	297	628	428	412	472	804	322	76	78	76	78	73	-0.039	5.11	0.66
84	13.712	13.678	0.16	0.16	1.36	83	1.98	1.14	84	1.2	97	0.050	100	100	1.1	0	592	298	620	427	411	470	795	321	76	78	76	78	72	-0.038	5.09	0.69
85	13.877	13.842	0.17	0.16	1.36	83	1.98	1.14	84	1.2	97	0.050	100	100	1.1	0	588	297	612	426	411	467	784	320	76	78	76	78	72	-0.038	5.07	0.71
86	14.041	14.006	0.16	0.16	1.35	83	1.97	1.14	84	1.2	97	0.050	99	100	1.0	-0.1	584	297	605	426	411	465	776	318	76	78	76	77	72	-0.038	5.07	0.74
87	14.206	14.171	0.16	0.16	1.35	83	1.97	1.14	84	1.2	97	0.050	100	100	1.0	0	580	297	598	425	410	462	769	315	76	78	76	77	72	-0.038	4.98	0.75
88	14.370	14.335	0.16	0.16	1.36	83	1.98	1.14	84	1.2	96	0.050	99	100	1.0	0	574	297	592	424	410	459	762	314	76	78	76	77	73	-0.038	4.98	0.77
89	14.535	14.499	0.17	0.16	1.36	83	1.97	1.14	84	1.2	96	0.050	100	100	1.0	0	574	297	585	423	410	458	756	312	76	78	76	77	72	-0.038	5.06	0.8
90	14.700	14.663	0.16	0.16	1.35	83	1.98	1.14	84	1.2	96	0.050	100	100	1.0	0	570	297	579	421	409	455	749	309	76	78	76	77	72	-0.037	4.96	0.78
91	14.865	14.827	0.17	0.16	1.36	83	1.98	1.15	84	1.2	96	0.050	100	100	1.0	0	567	296	573	420	409	453	744	308	76	78	76	77	72	-0.037	5.03	0.8
92	15.029	14.991	0.16	0.16	1.36	83	1.97	1.14	84	1.2	96	0.050	99	100	1.0	0	564	296	568	419	408	451	738	307	76	77	76	77	72	-0.036	4.95	0.82
93	15.194	15.156	0.17	0.17	1.36	83	1.98	1.14	84	1.2	96	0.050	100	100	0.9	-0.1	562	296	562	418	408	449	731	305	76	77	76	77	72	-0.037	4.87	0.83
94	15.359	15.320	0.16	0.16	1.36	83	1.98	1.14	84	1.2	95	0.050	100	100	0.9	0	558	295	557	416	408	447	724	304	76	77	76	77	72	-0.036	4.85	0.86
95	15.524	15.484	0.16	0.16	1.36	83	1.97	1.14	84	1.2	95	0.050	100	100	0.9	0	556	295	552	415	407	445	722	303	76	77	75	77	72	-0.036	4.87	0.89
96	15.688	15.648	0.16	0.16	1.36	83	1.98	1.14	84	1.2	95	0.050	99	100	0.9	0	553	295	547	413	407	443	715	303	75	77	75	77	72	-0.035	4.8	0.89
97	15.854	15.812	0.17	0.16	1.36	83	1.97	1.14	84	1.2	95	0.050	100	100	0.9	0	548	294	542	412	406	440	709	301	75	77	75	77	72	-0.035	4.83	0.95
98	16.019	15.977	0.16	0.17	1.37	83	1.98	1.14	84	1.2	95	0.050	100	100	0.9	0	548	293	538	411	405	439	708	299	75	77	75	76	72	-0.035	4.66	0.93
99	16.184	16.141	0.17	0.16	1.37	83	1.98	1.15	84	1.2	95	0.050	100	100	0.9	0	544	293	533	409	405	437	727	298	75	77	75	76	73	-0.035	5.84	0.78
100	16.349	16.306	0.16	0.17	1.36	83	1.97	1.14	84	1.2	94	0.050	100	100	0.8	-0.1	543	293	530	408	405	436	731	297	75	77	75	76	72	-0.035	5.83	0.81
101	16.514	16.470	0.16	0.16	1.36	83	1.97	1.14	84	1.2	95	0.050	100	100	0.8	0	542	293	526	407	405	435	728	297	75	76	75	76	72	-0.036	5.73	0.8
102	16.679	16.634	0.16	0.16	1.36	83	1.97	1.14	84	1.2	94	0.050	100	100	0.8	0	541	293	523	406	404	433	725	296	75	76	75	76	72	-0.034	5.63	0.81
103	16.844	16.798	0.17	0.16	1.36	83	1.98	1.14	84	1.2	94	0.050	100	100	0.8	0	539	292	520	405	404	432	722	296	75	76	75	76	72	-0.035	5.62	0.84
104	17.009	16.962	0.16	0.16	1.36	83	1.97	1.15	84	1.2	94	0.050	100	100	0.8	0	538	292	517	404	404	431	717	295	75	76	75	76	72	-0.035	5.52	0.84
105	17.174	17.127	0.16	0.16	1.36	83	1.97	1.14	84	1.2	94	0.050	100	100	0.8	0	537	292	514	403	404	430	713	294	75	76	75	76	72	-0.034	5.41	0.84
106	17.338	17.291	0.16	0.16	1.36	83	1.98	1.14	84	1.2	94	0.050	99	100	0.8	0	535	291	512	402	404	429	709	292	75	76	75	76	72	-0.034	5.46	0.89
107	17.503	17.456	0.16	0.16	1.36	83	1.97	1.14	84	1.2	93	0.050	100	100	0.7	-0.1	532	291	509	402	404	428	704	294	75	76	75	76	72	-0.033	5.42	0.92
108	17.668	17.620	0.16	0.16	1.36	83	1.98	1.14	84	1.2	93	0.050	100	99	0.7	0	531	291	506	401	403	426	700	292	75	76	75	76	72	-0.034	5.33	0.94
109	17.833	17.784	0.16	0.16	1.36	83	1.97	1.14	84	1.2	93	0.050	100	99	0.7	0	528	290	503	400	403	425	697	291	75	76	75	75	72	-0.034	5.31	0.97
110	17.998	17.948	0.17	0.16	1.36	83	1.97	1.15	84	1.2	93	0.050	100	99	0.7	0	529	290	501	399	403	424	693	290	75	76	75	75	72	-0.034	5.22	0.96

Wood Heater Test Data - ASTM E2780 / ASTM E2515

Intrepid IV - KJM 2/12/18

Run: 4

Manufacturer: Hearth & Home
Model: ~~Intrepid IV~~
Tracking No.: 2264
Project No.: 0135WS038E
Test Date: 22-Dec-17
Beginning Clock Time: 09:07

Total Sampling Time: 151 min
Recording Interval: 1 min
Background Sample Volume: _____ cubic feet

Meter Box Y Factor: 0.981 (1) 0.984 (2) _____ (Amb)

Barometric Pressure:	Begin	Middle	End	Average
	30.33	30.33	30.32	30.33 "Hg

OMNI Equipment Numbers: _____

PM Control Modules: 335, 00336
Dilution Tunnel MW(dry): 29.00 lb/lb-mole
Dilution Tunnel MW(wet): 28.78 lb/lb-mole
Dilution Tunnel H2O: 2.00 percent
Dilution Tunnel Static: -0.180 "H2O
Tunnel Area: 0.19635 ft2
Pitot Tube Cp: 0.99

Avg. Tunnel Velocity: 13.66 ft/sec.
Initial Tunnel Flow: 149.2 scfm
Average Tunnel Flow: 151.0 scfm
Post-Test Leak Check (1): 0.000 cfm @ 6 in. Hg
Post-Test Leak Check (2): 0.000 cfm @ 5 in. Hg
Average Test Piece Fuel Moisture: 20.41 Dry Basis %

Technician Signature: _____

Velocity Traverse Data	Pt.1	Pt.2	Pt.3	Pt.4	Pt.5	Pt.6	Pt.7	Pt.8	Center	
Initial dP	0.034	0.046	0.048	0.032	0.030	0.046	0.050	0.034	0.050	"H2O
Temp:	99	98	97	97	97	97	97	96	98	°F

V_{strav} 13.65 ft/sec V_{scent} 15.13 ft/sec F_p 0.902

	Particulate Sampling Data														Fuel Weight (lb)		Temperature Data (°F)												Stack Gas Data		
Elapsed Time (min)	Gas Meter 1 (ft^3)	Gas Meter 2 (ft^3)	Sample Rate 1 (cfm)	Sample Rate 2 (cfm)	Orifice dH 1 ("H_2O)	Meter 1 Temp (°F)	Meter 1 Vacuum ("Hg)	Orifice dH 2 ("H_2O)	Meter 2 Temp (°F)	Meter 2 Vacuum ("Hg)	Dilution Tunnel (°F)	Dilution Tunnel Center dP	Pro. Rate 1	Pro. Rate 2	Scale Reading	Weight Change	Firebox Top	Firebox Bottom	Firebox Back	Firebox Left	Firebox Right	Avg. Stove Surface	Fierbox Internal	Stack	Filter 1	Dryer Exit 1	Filter 2	Dryer Exit 2	Ambient	Draft ("H_2O)	CO_2 (%)	CO (%)
111	18.163	18.113	0.16	0.16	1.36	83	1.98	1.14	84	1.2	93	0.050	100	100	0.7	0	526	289	498	398	402	423	689	290	75	76	75	75	72	-0.033	5.26	1.02
112	18.328	18.277	0.16	0.16	1.36	83	1.98	1.14	84	1.2	92	0.050	100	99	0.7	0	524	288	496	397	402	421	686	288	75	76	75	75	73	-0.033	5.22	1.03
113	18.493	18.442	0.16	0.16	1.36	83	1.97	1.14	84	1.2	92	0.050	100	100	0.6	-0.1	524	288	493	396	402	421	685	287	75	75	75	75	73	-0.033	5.35	1
114	18.658	18.607	0.17	0.16	1.37	83	1.97	1.15	84	1.2	92	0.050	100	100	0.6	0	523	287	491	395	401	419	682	286	75	75	75	75	72	-0.032	5.26	1
115	18.823	18.771	0.16	0.16	1.36	83	1.98	1.14	84	1.2	93	0.050	100	99	0.6	0	524	287	488	394	401	419	678	285	75	75	75	75	72	-0.034	5.17	1.02
116	18.988	18.935	0.16	0.16	1.36	83	1.98	1.14	84	1.2	92	0.050	100	99	0.6	0	521	287	486	394	400	418	674	285	75	75	75	75	72	-0.032	5.02	1.02
117	19.153	19.099	0.16	0.16	1.36	83	1.98	1.14	84	1.2	92	0.050	100	99	0.6	0	522	286	484	392	400	417	668	284	75	75	75	75	73	-0.033	4.78	0.95
118	19.318	19.264	0.17	0.16	1.37	83	1.98	1.15	84	1.2	92	0.050	100	100	0.6	0	522	286	481	391	399	416	666	283	75	75	75	75	72	-0.032	4.81	0.94
119	19.484	19.428	0.17	0.16	1.36	83	1.97	1.14	84	1.2	93	0.050	100	99	0.5	-0.1	522	286	479	391	399	415	661	283	75	75	75	75	72	-0.032	4.74	0.97
120	19.649	19.593	0.16	0.16	1.36	83	1.98	1.14	84	1.2	93	0.050	100	100	0.5	0	520	286	476	390	398	414	655	282	75	75	75	75	72	-0.033	4.61	0.98
121	19.814	19.758	0.16	0.16	1.36	83	1.97	1.15	84	1.2	92	0.050	100	100	0.5	0	519	286	474	389	398	413	649	281	75	75	75	75	72	-0.032	4.5	1
122	19.980	19.922	0.17	0.16	1.37	83	1.98	1.14	84	1.2	92	0.050	100	99	0.5	0	518	285	471	388	397	412	645	280	75	75	75	75	72	-0.032	4.49	1.07
123	20.145	20.086	0.16	0.16	1.37	83	1.98	1.15	84	1.2	92	0.050	100	99	0.5	0	517	285	469	387	396	411	641	279	75	75	75	75	72	-0.031	4.43	1.07
124	20.307	20.247	0.16	0.16	1.36	83	1.98	1.15	84	1.2	91	0.050	98	97	0.5	0	514	284	466	386	395	409	634	276	74	75	75	75	72	-0.031	4.24	1.1
125	20.473	20.412	0.17	0.16	1.36	83	1.98	1.14	84	1.2	91	0.050	100	100	0.5	0	512	284	464	385	395	408	629	276	74	75	74	74	72	-0.031	4.21	1.13
126	20.638	20.577	0.17	0.17	1.36	83	1.98	1.15	84	1.2	91	0.050	100	100	0.4	-0.1	511	284	461	384	394	407	621	276	74	75	74	74	72	-0.032	4.04	1.12
127	20.803	20.742	0.16	0.16	1.36	83	1.98	1.14	84	1.2	91	0.050	100	100	0.4	0	509	284	459	383	393	406	617	273	74	75	74	74	72	-0.030	4.05	1.14
128	20.968	20.906	0.16	0.16	1.37	83	1.98	1.14	84	1.2	91	0.050	100	99	0.4	0	509	284	456	382	392	405	612	272	74	75	74	74	72	-0.031	3.97	1.14
129	21.133	21.070	0.16	0.16	1.37	83	1.98	1.13	84	1.2	91	0.050	100	99	0.4	0	506	283	453	382	391	403	605	272	74	75	74	74	72	-0.031	3.95	1.18
130	21.299	21.234	0.17	0.16	1.37	83	1.98	1.14	84	1.2	91	0.050	100	99	0.4	0	504	283	451	380	390	402	600	270	74	75	74	74	72	-0.030	3.89	1.17
131	21.464	21.398	0.16	0.16	1.37	83	1.97	1.15	84	1.2	91	0.050	100	99	0.4	0	502	282	448	379	389	400	595	270	74	75	74	74	72	-0.030	3.84	1.19
132	21.629	21.563	0.17	0.16	1.37	83	1.97	1.15	84	1.2	90	0.050	99	100	0.4	0	500	281	445	379	388	399	590	267	74	74	74	74	72	-0.030	3.84	1.2
133	21.794	21.728	0.16	0.17	1.37	83	1.97	1.15	84	1.2	90	0.050	99	100	0.4	0	499	281	442	378	387	397	586	266	74	74	74	74	73	-0.029	3.87	1.21
134	21.960	21.893	0.17	0.16	1.37	83	1.98	1.14	84	1.2	90	0.050	100	100	0.3	-0.1	499	281	440	376	386	396	582	265	74	74	74	74	72	-0.029	3.88	1.21
135	22.125	22.057	0.16	0.16	1.37	83	1.97	1.14	84	1.2	90	0.050	99	99	0.3	0	497	281	437	376	385	395	579	264	74	74	74	74	72	-0.029	3.9	1.18
136	22.290	22.221	0.16	0.16	1.37	83	1.97	1.14	84	1.2	90	0.050	99	99	0.3	0	494	280	435	375	383	393	609	264	74	74	74	74	72	-0.029	5.26	0.95
137	22.456	22.385	0.17	0.16	1.37	83	1.98	1.14	84	1.2	90	0.050	100	99	0.3	0	492	280	434	375	383	393	622	264	74	74	74	74	72	-0.029	5.47	0.93
138	22.621	22.550	0.16	0.16	1.37	83	1.98	1.14	84	1.2	90	0.050	99	100	0.3	0	492	279	432	374	381	392	625	266	74	74	74	74	72	-0.029	5.34	0.95
139	22.786	22.714	0.17	0.16	1.36	83	1.97	1.14	84	1.2	90	0.050	99	99	0.2	-0.1	492	279	431	374	380	391	626	268	74	74	74	74	72	-0.030	5.27	0.96
140	22.951	22.879	0.16	0.17	1.37	83	1.97	1.14	84	1.2	90	0.050	99	100	0.2	0	492	279	430	375	379	391	627	267	74	74	74	74	72	-0.030	5.13	0.95
141	23.117	23.044	0.17	0.16	1.37	83	1.98	1.14	84	1.2	90	0.050	100	100	0.2	0	490	278	429	374	378	390	627	267	74	74	74	74	72	-0.029	5.13	0.97
142	23.282	23.208	0.16	0.16	1.37	83	1.98	1.14	84	1.2	90	0.050	99	99	0.2	0	491	278	429	374	376	390	625	268	74	74	74	74	72	-0.030	5.03	1.02
143	23.448	23.372	0.17	0.16	1.37	83	1.98	1.14	84	1.2	90	0.050	100	99	0.2	0	489	277	428	373	376	389	625	267	74	74	74	74	72	-0.030	5	1.03
144	23.613	23.537	0.16	0.16	1.37	83	1.97	1.15	84	1.2	89	0.050	99	100	0.2	0	490	277	427	374	374	388	623	266	74	74	74	74	72	-0.030	4.91	1.04
145	23.779	23.701	0.17	0.16	1.36	83	1.98	1.15	84	1.2	89	0.050	100	99	0.1	-0.1	489	276	427	373	373	388	623	266	74	74	74	74	72	-0.029	4.92	1.05
146	23.945	23.865	0.17	0.16	1.37	83	1.98	1.14	84	1.2	90	0.050	100	99	0.1	0	488	276	426	373	372	387	623	267	74	74	74	74	72	-0.030	4.87	1.06
147	24.110	24.030	0.16	0.17	1.37	83	1.98	1.14	84	1.2	90	0.050	99	100	0.1	0	487	275	425	373	371	386	626	265	74	74	74	74	72	-0.029	4.83	1.08

Wood Heater Test Data - ASTM E2780 / ASTM E2515

Intrepid IV - KJM 2/12/18

Run: 4

Manufacturer: Hearth & Home
Model: ~~Intrepid IV~~
Tracking No.: 2264
Project No.: 0135WS038E
Test Date: 22-Dec-17
Beginning Clock Time: 09:07

Total Sampling Time: 151 min
Recording Interval: 1 min
Background Sample Volume: _____ cubic feet

Meter Box Y Factor: 0.981 (1) 0.984 (2) _____ (Amb)

Barometric Pressure:	Begin	Middle	End	Average	
	30.33	30.33	30.32	30.33	"Hg

OMNI Equipment Numbers: _____

~~PM Control Modules: 335, 00336~~
Dilution Tunnel MW(dry): 29.00 lb/lb-mole
Dilution Tunnel MW(wet): 28.78 lb/lb-mole
Dilution Tunnel H2O: 2.00 percent
Dilution Tunnel Static: -0.180 "H2O
Tunnel Area: 0.19635 ft2
Pitot Tube Cp: 0.99

Avg. Tunnel Velocity: 13.66 ft/sec.
Initial Tunnel Flow: 149.2 scfm
Average Tunnel Flow: 151.0 scfm
Post-Test Leak Check (1): 0.000 cfm @ 6 in. Hg
Post-Test Leak Check (2): 0.000 cfm @ 5 in. Hg
Average Test Piece Fuel Moisture: 20.41 Dry Basis %

Technician Signature: [signature]

Velocity Traverse Data

	Pt.1	Pt.2	Pt.3	Pt.4	Pt.5	Pt.6	Pt.7	Pt.8	Center	
Initial dP	0.034	0.046	0.048	0.032	0.030	0.046	0.050	0.034	0.050	"H2O
Temp:	99	98	97	97	97	97	97	96	98	°F

V_{strav} 13.65 ft/sec V_{scent} 15.13 ft/sec F_p 0.902

	Particulate Sampling Data														Fuel Weight (lb)		Temperature Data (°F)													Stack Gas Data		
Elapsed Time (min)	Gas Meter 1 (ft^3)	Gas Meter 2 (ft^3)	Sample Rate 1 (cfm)	Sample Rate 2 (cfm)	Orifice dH 1 ("H_2O)	Meter 1 Temp (°F)	Meter 1 Vacuum ("Hg)	Orifice dH 2 ("H_2O)	Meter 2 Temp (°F)	Meter 2 Vacuum ("Hg)	Dilution Tunnel (°F)	Dilution Tunnel Center dP	Pro. Rate 1	Pro. Rate 2	Scale Reading	Weight Change	Firebox Top	Firebox Bottom	Firebox Back	Firebox Left	Firebox Right	Avg. Stove Surface	Fierbox Internal	Stack	Filter 1	Dryer Exit 1	Filter 2	Dryer Exit 2	Ambient	Draft ("H_2O)	CO_2 (%)	CO (%)
148	24.275	24.195	0.16	0.16	1.37	83	1.97	1.14	84	1.2	90	0.050	99	100	0.1	0	486	275	425	373	371	386	626	265	74	74	74	74	72	-0.029	4.89	1.03
149	24.440	24.359	0.17	0.16	1.37	83	1.98	1.14	84	1.2	89	0.050	99	99	0.1	0	486	274	424	372	369	385	625	265	74	74	74	74	72	-0.029	4.91	1.06
150	24.606	24.523	0.17	0.16	1.37	83	1.97	1.14	84	1.2	90	0.050	100	99	0.1	0	486	274	424	372	369	385	623	267	74	74	74	74	72	-0.029	4.83	1.04
151	24.771	24.688	0.16	0.16	1.36	83	1.97	1.14	84	1.2	90	0.050	99	100	0.0	-0.1	486	274	423	372	368	385	622	266	74	74	74	74	72	-0.029	4.73	1.05
Avg/Tot	24.771	24.688	0.16	0.16	1.35	81		1.14	82		99	0.050	100	100								94.2				78	75	77	72	-0.043		

Wood Heater Lab Data - ASTM E2780 / ASTM E2515

Intrepid IV - KJM 2/12/18

Manufacturer:	Hearth & Home	Equipment Numbers:	
Model:	~~Intrepid IV~~		
Tracking No.:	2264		
Project No.:	0135WS038E		
Run #:	4		
Date:	12/22/17		

TRAIN 1 (First Hour emissions)

Sample Component	Reagent	Filter, Probe or Dish #	Weights		
			Final, mg	Tare, mg	Particulate, mg
B. Front filter catch	Filter	D365	111.8	111.5	0.3
C. Rear filter catch	Filter				0.0
D. Probe catch*	Probe				0.0
E. Filter seals catch*	Seals				0.0

Sub-Total	Total Particulate, mg:	0.3

TRAIN 1 (Post First Hour Change-out)

Sample Component	Reagent	Filter, Probe or Dish #	Weights		
			Final, mg	Tare, mg	Particulate, mg
B. Front filter catch	Filter	D367	111.7	111.3	0.4
C. Rear filter catch	Filter	D366	111.1	111.0	0.1
D. Probe catch*	Probe	OES6	113710.5	113709.7	0.8
E. Filter seals catch*	Seals	R547	3397.9	3397.3	0.6

Sub-Total	Total Particulate, mg:	1.9
Train 1 Aggregate	Total Particulate, mg:	2.2

TRAIN 2

Sample Component	Reagent	Filter, Probe or Dish #	Weights		
			Final, mg	Tare, mg	Particulate, mg
A. Front filter catch	Filter	D368	111.5	110.9	0.6
B. Rear filter catch	Filter	D369	111.1	111.3	-0.2
C. Probe catch*	Probe	7	114981.7	114981.2	0.5
D. Filter seals catch*	Seals	R548	3296.6	3295.5	1.1

	Total Particulate, mg:	2.0

AMBIENT

Sample Component	Reagent	Filter # or Probe #	Weights		
			Final, mg	Tare, mg	Particulate, mg
A. Front filter catch*	Filter				0.0

	Total Particulate, mg:	0.0

*Particulate catch that results in a negative number, is assumed to be zero for probes and seals, negative numbers for filters are assumed to be part of the seal weight.

Component	Equations:
A. Front filter catch	Final (mg) - Tare (mg) = Particulate, mg
B. Rear filter catch	Final (mg) - Tare (mg) = Particulate, mg
C. Probe catch	Final (mg) - Tare (mg) = Particulate, mg

Technician Signature: 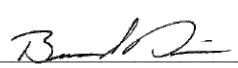

Wood Heater Test Results - ASTM E2780 / ASTM E2515

Manufacturer: Hearth & Home
Model: Intrepid IV
Project No.: 0135WS038E
Tracking No.: 2264
Run: 4
Test Date: 12/22/17

Burn Rate	**1.33 kg/hr dry**
Average Tunnel Temperature	99 degrees Fahrenheit
Average Gas Velocity in Dilution Tunnel - vs	13.66 feet/second
Average Gas Flow Rate in Dilution Tunnel - Qsd	9058.4 dscf/hour
Average Delta p	0.050 inches H20
Total Time of Test	151 minutes

	AMBIENT	SAMPLE TRAIN 1	SAMPLE TRAIN 2	FIRST HOUR FILTER (TRAIN 1)
Total Sample Volume - Vm	0.000 cubic feet	24.771 cubic feet	24.688 cubic feet	9.762 cubic feet
Average Gas Meter Temperature	72 degrees Fahrenheit	81 degrees Fahrenheit	82 degrees Fahrenheit	78 degrees Fahrenheit
Total Sample Volume (Standard Conditions) - Vmstd	0.000 dscf	24.106 dscf	24.041 dscf	9.548 dscf
Total Particulates - m_n	0 mg	2.2 mg	2 mg	0.3 mg
Particulate Concentration (dry-standard) - C_r/C_s	0.000000 grams/dscf	0.00009 grams/dscf	0.00008 grams/dscf	0.00003 grams/dscf
Total Particulate Emissions - E_T	0.00 grams	2.08 grams	1.90 grams	0.28 grams
Particulate Emission Rate	0.00 grams/hour	0.83 grams/hour	0.75 grams/hour	0.28 grams/hour
Emissions Factor		0.62 g/kg	0.57 g/kg	0.10 g/kg
Difference from Average Total Particulate Emissions		0.09 grams	0.09 grams	
	Dual Train Comparison Results Are Acceptable			

FINAL AVERAGE RESULTS

Complete Test Run	
Total Particulate Emissions - E_T	1.99 grams
Particulate Emission Rate	**0.79 grams/hour**
Emissions Factor	0.60 grams/kg
First Hour Emissions	
Total Particulate Emissions - E_T	0.28 grams
Particulate Emission Rate	0.28 grams/hour
Emissions Factor	0.10 grams/kg
7.5% of Average Total Particulate Emissions	0.15 grams

QUALITY CHECKS

Filter Temps < 90 °F	OK
Filter Face Velocity (47 mm)	OK
Dryer Exit Temp < 80F	NOT ACCEPTABLE
Leakage Rate	OK
Ambient Temp (55-90°F)	OK
Negative Probe Weight Eval.	OK
Pro-Rate Variation	OK
Stove Surface ΔT	OK
Train Precesion 7.5%	4.63
Train Precision 0.5g/kg	0.06

Technician Signature: _____

Wood Heater Lab Data - ASTM E2780 / ASTM E2515

Manufacturer: Hearth & Home
Model: Intrepiod IV
Tracking No.: 2264
Project No.: 0135WS038E
Run #: 4
Date: 12/22/17

Equipment Numbers:

Uncorrected

TRAIN 1 (First Hour emissions)

Sample Component	Reagent	Filter, Probe or Dish #	Weights		
			Final, mg	Tare, mg	Particulate, mg
B. Front filter catch	Filter	D365	111.8	111.5	0.3
C. Rear filter catch	Filter				0.0
D. Probe catch*	Probe				0.0
E. Filter seals catch*	Seals				0.0

Sub-Total Total Particulate, mg: 0.3

TRAIN 1 (Post First Hour Change-out)

Sample Component	Reagent	Filter, Probe or Dish #	Weights		
			Final, mg	Tare, mg	Particulate, mg
B. Front filter catch	Filter	D367	111.7	111.3	0.4
C. Rear filter catch	Filter	D366	111.1	111.0	0.1
D. Probe catch*	Probe	OES6	113710.5	113709.7	0.8
E. Filter seals catch*	Seals	R547	3397.9	3397.3	0.6

Sub-Total Total Particulate, mg: 1.9

Train 1 Aggregate Total Particulate, mg: **2.2**

TRAIN 2

Sample Component	Reagent	Filter, Probe or Dish #	Weights		
			Final, mg	Tare, mg	Particulate, mg
A. Front filter catch	Filter	D368	111.5	110.9	0.6
B. Rear filter catch	Filter	D369	111.3	111.3	0.0
C. Probe catch*	Probe	7	114981.7	114981.2	0.5
D. Filter seals catch*	Seals	R548	3296.6	3295.5	1.1

Total Particulate, mg: **2.2**

AMBIENT

Sample Component	Reagent	Filter # or Probe #	Weights		
			Final, mg	Tare, mg	Particulate, mg
A. Front filter catch*	Filter				0.0

Total Particulate, mg: **0.0**

*Particulate catch that results in a negative number, is assumed to be zero for probes and seals, negative numbers for filters are assumed to be part of the seal weight.

Component	Equations:
A. Front filter catch	Final (mg) - Tare (mg) = Particulate, mg
B. Rear filter catch	Final (mg) - Tare (mg) = Particulate, mg
C. Probe catch	Final (mg) - Tare (mg) = Particulate, mg

Technician Signature:_____

Wood Heater Test Results - ASTM E2780 / ASTM E2515

Manufacturer: Hearth & Home
Model: Intrepiod IV
Project No.: 0135WS038E
Tracking No.: 2264
Run: 4
Test Date: 12/22/17

Burn Rate	**1.33 kg/hr dry**
Average Tunnel Temperature	99 degrees Fahrenheit
Average Gas Velocity in Dilution Tunnel - vs	13.66 feet/second
Average Gas Flow Rate in Dilution Tunnel - Qsd	9058.4 dscf/hour
Average Delta p	0.050 inches H20
Total Time of Test	151 minutes

Uncorrected

	AMBIENT	SAMPLE TRAIN 1	SAMPLE TRAIN 2	FIRST HOUR FILTER (TRAIN 1)
Total Sample Volume - Vm	0.000 cubic feet	24.771 cubic feet	24.688 cubic feet	9.762 cubic feet
Average Gas Meter Temperature	72 degrees Fahrenheit	81 degrees Fahrenheit	82 degrees Fahrenheit	78 degrees Fahrenheit
Total Sample Volume (Standard Conditions) - Vmstd	0.000 dscf	24.106 dscf	24.041 dscf	9.548 dscf
Total Particulates - m_n	0 mg	2.2 mg	2.2 mg	0.3 mg
Particulate Concentration (dry-standard) - C_f/C_s	0.000000 grams/dscf	0.00009 grams/dscf	0.00009 grams/dscf	0.00003 grams/dscf
Total Particulate Emissions - E_T	0.00 grams	2.08 grams	2.09 grams	0.28 grams
Particulate Emission Rate	0.00 grams/hour	0.83 grams/hour	0.83 grams/hour	0.28 grams/hour
Emissions Factor		0.62 g/kg	0.62 g/kg	0.10 g/kg
Difference from Average Total Particulate Emissions		0.00 grams	0.00 grams	
	Dual Train Comparison Results Are Acceptable			

FINAL AVERAGE RESULTS

Complete Test Run	
Total Particulate Emissions - E_T	2.08 grams
Particulate Emission Rate	**0.83 grams/hour**
Emissions Factor	0.62 grams/kg
First Hour Emissions	
Total Particulate Emissions - E_T	0.28 grams
Particulate Emission Rate	0.28 grams/hour
Emissions Factor	0.10 grams/kg
7.5% of Average Total Particulate Emissions	0.16 grams

QUALITY CHECKS

Filter Temps < 90 °F	OK
Filter Face Velocity (47 mm)	OK
Dryer Exit Temp < 80F	NOT ACCEPTABLE
Leakage Rate	OK
Ambient Temp (55-90°F)	OK
Negative Probe Weight Eval.	OK
Pro-Rate Variation	OK
Stove Surface ΔT	OK
Train Precesion 7.5%	0.13
Train Precision 0.5g/kg	0.00

Technician Signature: _____

Wood Heater Efficiency Results - CSA B415.1

Manufacturer: Hearth & Home
Technician Signature: 
Model: ~~Intrepiod IV~~ Intrepid IV - KJM 2/12/18
Date: 12/22/17
Run: 4
Control #: 0135WS038E
Test Duration: 151
Output Category: III

Test Results in Accordance with CSA B415.1-09

	HHV Basis	LHV Basis
Overall Efficiency	74.7%	80.8%
Combustion Efficiency	96.1%	96.1%
Heat Transfer Efficiency	78%	84.0%

Output Rate (kJ/h)	19,504	18,502	(Btu/h)
Burn Rate (kg/h)	1.32	2.90	(lb/h)
Input (kJ/h)	26,101	24,760	(Btu/h)

Test Load Weight (dry kg)	3.32	7.31	dry lb
MC wet (%)	16.95271841		
MC dry (%)	20.41		
Particulate (g)	0.79		
CO (g)	187		
Test Duration (h)	2.52		

Emissions	Particulate	CO
g/MJ Output	0.02	3.82
g/kg Dry Fuel	0.24	56.55
g/h	0.31	74.50
lb/MM Btu Output	0.04	8.88

Air/Fuel Ratio (A/F)	12.23

VERSION: 2.2 12/14/2009

OMNI-Test Laboratories, Inc. **ASTM E2780 Wood Heater Run Sheets**

Client: Hearth & Home Project Number: 0135WS038E Run Number: 4

Model: Intrepid IV Tracking Number: 2264 Date: 12/22/17

Test Crew: B Davis

OMNI Equipment ID numbers:

ASTM E2515 Lab Sheet

Assembled By:

B Davis

Date/Time in Dessicator:

12:00 12/22/17

	Weighing #1	Weighing #2	Weighing #3	Weighing #4	Weighing #5
Date/Time:	1/2/18 0820	1/4/18 0850	1/5/18		
R/H %:	8.8	5.2	9.3		
Temp:	69.6	72.4	70.6		
200 mg Audit:	0.20000	0.20000	0.19999		
2 g Audit:	1.9998	1.9998	1.9999		
100 g Audit:	99.9978	99.9974	99.9981		
Initials:	BL	BL	BL		

Train	Element	ID #	Tare (mg)	Weight (mg)	Weight (mg)	Weight (mg)	Weight (mg)	Weight (mg)
A (First Hour)	Front Filter	D365	111.5	111.7	111.8 ✓			
	Rear Filter							
	Probe	OES6 BL						
	O-Ring Set							
A (Remainder)	Front Filter	D367	111.3	111.6	111.7 ✓			
	Rear Filter	D366	111.0 ~~110.9~~ BL	110.9	111.1 ✓			
	Probe	7 OES6	113709.7	113710.3	113710.7	113710.5 ✓		
	O-Ring Set	R547	3397.3 ~~110.9~~ LHS BL	3397.8	3397.9 ✓			
B	Front Filter	D368		111.3	111.5 ✓			
	Rear Filter	D369	111.3	111.0	111.1 ✓			
	Probe	7	114981.2	114981.5	114981.7 ✓			
	O-Ring Set	R548	3295.5	3296.5	3296.6 ✓			
BG	Filter							

Technician Signature: BD Date: 1/18/18

OMNI-Test Laboratories, Inc.

ASTM E2780 Wood Heater Run Sheets

Client: Hearth & Home Project Number: 0135WS038E Run Number: 4

Model: Intrepid IV Tracking Number: 2264 Date: 12/22/17

Test Crew: BDAvi

OMNI Equipment ID numbers:

Wood Heater Supplemental Data

Start Time: 0907 Booth #: E1

Stop Time: 1138

Stack Gas Leak Check:

Initial: good Final: good

Sample Train Leak Check:

A: 0.0 @ 6 "Hg

B: 0.0 @ 5 "Hg

Calibrations: Span Gas CO_2: 16.74 CO: 4.20 / 901 ppm

	Pre Test		Post Test	
	Zero	Span	Zero	Span
Time	0856	0857	1141	1141
CO_2	0.00	16.74	0.00	16.72
CO	0.000/0	4.208/901	0.000/1	4.201/897

Air Velocity (ft/min): Initial: 250 Final: 250

Scale Audit (lbs): Initial: 10.0 Final: 10.0

Pitot Tube Leak Test: Initial: good Final: good

Stack Diameter (in): 6"

Induced Draft: 0.0"

% Smoke Capture: 100%

Flue Pipe Cleaned Prior to First Test in Series:

Date: 12/19/17 Initials: AL

	Initial	Middle	Ending
P_b (in/Hg)	30.33	30.33	30.32
RH (%)	21.8	21.4	20.7
Ambient (°F)	73	73	72

Background Filter Volume: N/A

Tunnel Traverse		
Microtector Reading	dP (in H_2O)	T(°F)
1	.034	99
2	.046	98
3	.048	97
4	.032	97
1	.030	97
2	.046	97
3	.050	97
4	.034	96
Center:		
	.050	98

Tunnel Static Pressure (in H_2O):	
Beginning of Test	End of Test
-.18	-.18

Technician Signature: BD Date: 1/12/18

OMNI-Test Laboratories, Inc. **ASTM E2780 Wood Heater Run Sheets**

Client: Hearth & Home Project Number: 0135WS038E Run Number: 4

Model: Intrepid IV Tracking Number: 2264 Date: 12/25/17

Test Crew: BDAVIS

OMNI Equipment ID numbers:

Wood Heater Fuel Data

Fuel: Douglas fir, untreated and air dried, standard grade or better dimensional lumber

Pre-Burn Fuel

Calibration: Cal Value (1) = 12% Actual Reading 12
Cal Value (2) = 22% Actual Reading 22

Piece:	Length:	Reading:	Piece:	Length:	Reading:
1	36 in	22.4	7	in	
2	36 in	23.2	8	in	
	36 in	20.0			
3	36 in	19.4	9	in	
4	in		10	in	
5	in		11	in	
6	in		12	in	

Total Pre-Burn Fuel Weight: 15.4 Pre-Burn Fuel Average Moisture: 21.1%

Time (clock): 0720 Room Temperature (F): 69 Initials: BL

Test Fuel

Firebox Volume (ft³): 1.31 Test Fuel Piece Length (in): 13.0"
Load Weight Range (lb): 8.25-9.17-10.08 Total Wet Fuel Load Weight (lb): 8.8

Fuel Type & Amount: 2 x 4: 5 4 x 4: 0
Weight (with spacers): 8.8 Weight (with spacers): N/A

Piece:	Weight (lbs):	Moisture Readings (%DB):			Fuel Type:
1	1.3	20.4	21.6	20.1	2x4
2	1.5	19.3	21.4	20.6	2x4
3	1.2	19.1	19.3	19.7	2x4
4	1.4	19.3	20.4	20.4	2x4
5	1.4	21.6	21.4	21.6	2x4
6					
7					

Spacer Moisture Readings (%DB)

17.8	19.3	16.5	19.6	18.2			
15.6	18.2	18.6	13.1	18.1			
17.6	15.8	10.4	15.8				
12.9	18.7	18.8	16.7				

Technician Signature: Time (clock): 0835 Room Temperature (F): 70 Date: Initials: 12/22/17

BD 1/10/18

OMNI-Test Laboratories, Inc. **ASTM E2780 Wood Heater Run Sheets**

Client: Hearth & Home Project Number: 0135WS038E Run Number: 4

Model: Intrepid IV Tracking Number: 2264 Date: 12/22/17

Test Crew: B Davis

OMNI Equipment ID numbers:

Wood Heater Run Notes

Air Control Settings

Primary: fully open, control Arm pushed fully to the left.

Secondary: fixed

Tertiary/Pilot: N/A

Fan: N/A

Preburn Notes

Time	Notes
10	Raked coals
30	Raked coals
50	Raked coals
70	Raked coals
78	Leveled coal bed

Test Notes

Sketch test fuel configuration:

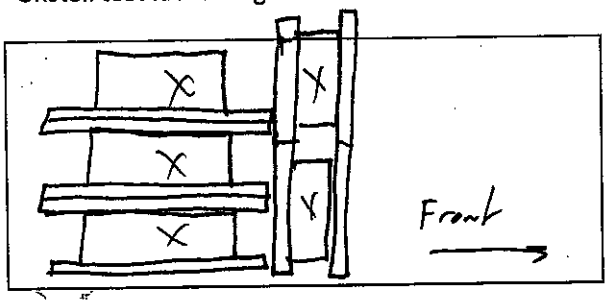

Start up procedures & Timeline:

Bypass: closed by 1:00

Fuel loaded by: 55 seconds

Door closed at: 1:00 min

Primary air: At test setting entire test.

Notes: N/A

Time	Notes
60	changed front filter in tray A.

Technician Signature: B D

Date: 12/22/17

Run 5

Wood Heater Preburn Data - ASTM E2780

Intrepid IV - KJM 2/12/18

Run: 5

Technician Signature:

Manufacturer:	Hearth & Home
Model:	~~Intrepiod IV~~
Tracking No.:	2264
Project No.:	0135WS038E
Test Date:	1/2/18
Beginning Clock Time:	11:26

Preburn Fuel Data

Fuel Piece Lengths (in.):	6
Total Preburn Weight (lb):	15.1
Fuel Moisture Readings (% DB):	19.2
	22.8
	22.1
	20.6
Avg Preburn Moisture (% DB):	**21.18**

Coal Bed Range (lb):	**1.8** (min)	**2.3** (max)

			Temperatures (°F)							
Elapsed Time (min)	Scale (lb)	Stack Draft (in H_2O)	FB Top	FB Bottom	FB Back	FB Left	FB Right	Avg. FB	Stack	Ambient
0	9.8	-0.077	502	145	516	262	200	325	984	72
1	9.6	-0.066	517	151	559	267	205	339.8	678	72
2	9.4	-0.058	515	156	579	273	210	346.6	551	72
3	9.3	-0.054	506	162	590	279	215	350.4	486	72
4	9.2	-0.05	498	167	598	284	220	353.4	449	72
5	9.1	-0.049	496	172	604	290	225	357.4	430	72
6	9	-0.047	500	178	609	294	230	362.2	419	72
7	8.9	-0.044	505	183	611	298	235	366.4	408	72
8	8.8	-0.043	510	189	612	302	239	370.4	396	72
9	8.7	-0.041	514	194	610	306	243	373.4	387	72
10	8.6	-0.04	519	199	608	308	247	376.2	379	72
11	8.5	-0.047	505	203	606	311	251	375.2	444	72
12	8.2	-0.05	498	208	625	313	254	379.6	438	72
13	8	-0.05	504	213	646	315	258	387.2	448	72
14	7.8	-0.05	522	218	669	317	262	397.6	457	72
15	7.6	-0.05	546	223	689	319	267	408.8	462	72
16	7.4	-0.05	567	227	710	322	271	419.4	466	72
17	7.3	-0.051	588	230	729	324	277	429.6	472	72
18	7.1	-0.051	606	234	748	327	282	439.4	474	72
19	6.9	-0.051	622	238	765	329	287	448.2	480	72
20	6.7	-0.05	634	241	782	332	293	456.4	482	72
21	6.5	-0.05	641	244	797	335	298	463	481	72
22	6.4	-0.051	646	246	811	337	304	468.8	486	72
23	6.2	-0.05	652	249	825	341	310	475.4	489	72
24	6.1	-0.049	656	252	836	344	315	480.6	483	72
25	5.9	-0.05	660	254	845	346	321	485.2	479	72
26	5.8	-0.048	664	256	853	349	327	489.8	475	72
27	5.7	-0.049	669	258	858	352	333	494	474	73
28	5.5	-0.048	673	260	863	356	338	498	469	72
29	5.4	-0.049	678	262	867	358	344	501.8	473	72
30	5.2	-0.048	682	264	872	361	349	505.6	472	72
31	5.1	-0.048	687	266	877	364	355	509.8	471	72
32	2.6	-0.075	679	267	872	368	360	509.2	878	72
33	4.5	-0.055	684	269	874	370	365	512.4	565	73
34	4.3	-0.052	689	270	877	374	369	515.8	499	72
35	4.2	-0.05	695	272	880	378	374	519.8	479	73
36	4	-0.051	703	273	884	381	378	523.8	474	72
37	3.9	-0.05	711	274	890	385	382	528.4	470	73
38	3.7	-0.049	718	276	895	388	386	532.6	469	73

Wood Heater Preburn Data - ASTM E2780

Intrepid IV - KJM 2/12/18

Run: 5

Technician Signature:

Manufacturer:	Hearth & Home
Model:	~~Intrepiod IV~~
Tracking No.:	2264
Project No.:	0135WS038E
Test Date:	1/2/18
Beginning Clock Time:	11:26

Preburn Fuel Data

Fuel Piece Lengths (in.):	6
Total Preburn Weight (lb):	15.1
Fuel Moisture Readings (% DB):	19.2
	22.8
	22.1
	20.6
Avg Preburn Moisture (% DB):	**21.18**

Coal Bed Range (lb):	**1.8** (min)	**2.3** (max)

			Temperatures (°F)							
Elapsed Time (min)	Scale (lb)	Stack Draft (in H_2O)	FB Top	FB Bottom	FB Back	FB Left	FB Right	Avg. FB	Stack	Ambient
39	3.6	-0.047	722	277	899	392	390	536	464	72
40	3.5	-0.047	728	278	902	395	394	539.4	458	73
41	3.4	-0.046	730	280	902	398	397	541.4	451	72
42	3.4	-0.045	732	281	900	401	400	542.8	445	73
43	3.3	-0.044	733	282	896	404	403	543.6	439	73
44	3.2	-0.043	726	283	890	406	406	542.2	431	73
45	3.1	-0.043	714	285	882	409	409	539.8	423	73
46	3.1	-0.041	703	286	873	411	411	536.8	416	73
47	3	-0.04	691	287	862	413	413	533.2	409	73
48	3	-0.04	676	289	851	414	414	528.8	401	73
49	2.9	-0.039	663	290	839	416	414	524.4	394	73
50	2.9	-0.038	653	292	828	417	416	521.2	392	72
51	2.9	-0.037	645	294	817	418	417	518.2	387	73
52	2.8	-0.04	628	296	800	419	417	512	483	73
53	2.7	-0.037	621	298	794	421	418	510.4	409	73
54	2.7	-0.036	618	300	786	422	418	508.8	387	73
55	2.7	-0.035	619	302	776	424	419	508	375	73
56	2.6	-0.034	618	304	765	426	419	506.4	367	72
57	2.6	-0.033	616	306	753	427	419	504.2	364	73
58	2.6	-0.033	612	308	742	429	420	502.2	359	73
59	2.5	-0.032	607	310	730	431	420	499.6	355	73
60	2.5	-0.031	603	311	719	432	420	497	354	72
61	2.5	-0.031	598	313	708	433	421	494.6	349	73
62	2.4	-0.031	595	315	697	434	421	492.4	348	73
63	2.4	-0.03	590	316	686	435	421	489.6	345	73
64	2.4	-0.029	585	318	676	436	422	487.4	342	73
65	2.4	-0.029	583	320	666	436	423	485.6	340	73
66	2.3	-0.028	580	321	657	437	423	483.6	337	72
67	2.3	-0.029	576	323	648	437	423	481.4	335	73
68	2.3	-0.028	574	325	639	437	423	479.6	334	73
69	2.3	-0.027	569	326	631	438	423	477.4	332	73
70	2.2	-0.027	567	328	623	437	424	475.8	328	72
71	2.2	-0.026	565	329	615	437	424	474	328	72
72	2.2	-0.026	563	330	608	437	424	472.4	321	72
73	2.2	-0.026	561	331	602	437	424	471	321	73
74	2.1	-0.026	559	332	595	437	424	469.4	317	73
75	2.1	-0.025	558	334	588	436	424	468	316	73
76	2.1	-0.024	556	335	582	436	423	466.4	315	73

Wood Heater Test Fuel Data - ASTM E2780

Manufacturer:	Hearth & Home
Model:	~~Intrepiod IV~~ Intrepid IV - KJM 2/12/18
Tracking No.:	2264
Project No.:	0135WS038E
Test Date:	1/2/2018
Run No.:	5

Firebox Volume (ft^3):	1.31
Fuel Piece Length (in):	13
2x4 Crib Weight (lb):	9
4x4 Crib Weight (lb):	0

Total Fuel Weight (Dry Basis, lb):	7.6	
Fuel Density (lb/ft^3, Dry Basis):	31.20	OK
Loading Density (lb/ft^3, Wet Basis):	6.87	OK
2x4 Percentage:	N/A	N/A

Coal Bed Range (20-25%): **1.8 - 2.25**

Test Fuel Piece	Weight (lb)	Size	Readings (Dry Basis %)			Dry Weight (lb)
1	1.5	2"x 4"	20.4	21.1	20.2	1.24
2	1.5	2"x 4"	19.2	20.2	19.2	1.25
3	1.5	2"x 4"	19.2	20.3	20.1	1.25
4	1.5	2"x 4"	19.7	19.9	20.5	1.25
5	1.4	2"x 4"	20.4	21.0	20.3	1.16

Spacer Readings (Dry Basis %)			
14.3	19.3		
12.1	16.6		
16.5	17.1		
10.2	14.3		
18.6	11.1		
13.9			
15.4			
17.1			
10.1			
17.4			
14.3			
14.7			
18.2			

Technician Signature: 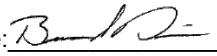

Wood Heater Test Data - ASTM E2780 / ASTM E2515

Intrepid IV - KJM 2/12/18

Run: 5

Manufacturer: Hearth & Home
Model: ~~Intrepid IV~~
Tracking No.: 2264
Project No.: 0135WS038E
Test Date: 02-Jan-18
Beginning Clock Time: 12:44

Total Sampling Time: 158 min
Recording Interval: 1 min
Background Sample Volume: _____ cubic feet

Meter Box Y Factor: 0.981 (1) 0.984 (2) _____ (Amb)

Barometric Pressure:	Begin	Middle	End	Average
	30.36	30.35	30.34	30.35 "Hg

OMNI Equipment Numbers: _____

PM Control Modules: 0035, 0036
Dilution Tunnel MW(dry): 29.00 lb/lb-mole
Dilution Tunnel MW(wet): 28.78 lb/lb-mole
Dilution Tunnel H2O: 2.00 percent
Dilution Tunnel Static: -0.180 "H2O
Tunnel Area: 0.19635 ft2
Pitot Tube Cp: 0.99

Avg. Tunnel Velocity: 13.55 ft/sec.
Initial Tunnel Flow: 147.6 scfm
Average Tunnel Flow: 149.6 scfm
Post-Test Leak Check (1): 0.000 cfm @ 5 in. Hg
Post-Test Leak Check (2): 0.000 cfm @ 5 in. Hg
Average Test Piece Fuel Moisture: 20.11 Dry Basis %

Technician Signature:

Velocity Traverse Data	Pt.1	Pt.2	Pt.3	Pt.4	Pt.5	Pt.6	Pt.7	Pt.8	Center	
Initial dP	0.028	0.046	0.048	0.036	0.032	0.046	0.050	0.028	0.050	"H2O
Temp:	98	98	97	98	98	98	98	98	97	°F

V_{strav} 13.52 ft/sec V_{scent} 15.11 ft/sec F_p 0.894

	Particulate Sampling Data														Fuel Weight (lb)		Temperature Data (°F)													Stack Gas Data		
Elapsed Time (min)	Gas Meter 1 (ft^3)	Gas Meter 2 (ft^3)	Sample Rate 1 (cfm)	Sample Rate 2 (cfm)	Orifice dH 1 ("H_2O)	Meter 1 Temp (°F)	Meter 1 Vacuum ("Hg)	Orifice dH 2 ("H_2O)	Meter 2 Temp (°F)	Meter 2 Vacuum ("Hg)	Dilution Tunnel (°F)	Dilution Tunnel Center dP	Pro. Rate 1	Pro. Rate 2	Scale Reading	Weight Change	Firebox Top	Firebox Bottom	Firebox Back	Firebox Left	Firebox Right	Avg. Stove Surface	Firebox Interior	Stack	Filter 1	Dryer Exit 1	Filter 2	Dryer Exit 2	Ambient	Draft ("H_2O)	CO_2 (%)	CO (%)
0	0.000	0.000			1.10	75	1.83	0.85	76	1	108	0.050			9.0		549	337	571	436	423	463	893	302	72	77	3,218	77	73	-0.023	5.89	0.08
1	0.154	0.140	0.15	0.14	1.36	75	1.97	1.09	76	1	129	0.050	98	92	9.0	0	533	338	564	435	423	459	858	288	73	78	3218	77	73	-0.044	1.42	0.18
2	0.317	0.293	0.16	0.15	1.35	75	1.94	1.10	76	1	103	0.050	101	98	8.9	-0.1	505	339	566	434	422	453	1063	289	74	78	3218	78	73	-0.026	8.99	0.05
3	0.479	0.449	0.16	0.16	1.35	75	1.95	1.10	76	1	99	0.050	100	100	8.8	-0.1	489	340	572	431	421	451	1080	296	74	79	3218	77	72	-0.027	8.6	0.04
4	0.642	0.603	0.16	0.15	1.36	75	1.95	1.10	76	1	97	0.050	101	98	8.7	-0.1	476	340	578	429	419	448	1100	302	74	78	3218	77	72	-0.029	8.74	0.04
5	0.804	0.758	0.16	0.16	1.36	75	1.95	1.09	77	1	97	0.050	100	99	8.6	-0.1	474	341	585	427	417	449	1112	312	74	78	3218	77	72	-0.030	8.93	0.11
6	0.967	0.912	0.16	0.15	1.36	76	1.95	1.10	77	1	98	0.050	101	98	8.6	0	474	341	593	424	414	449	1115	319	74	78	3218	77	72	-0.031	8.62	0.17
7	1.130	1.066	0.16	0.15	1.35	76	1.94	1.09	77	1	98	0.050	101	98	8.5	-0.1	476	342	601	421	411	450	1126	326	74	78	3218	77	72	-0.032	8.91	0.2
8	1.292	1.221	0.16	0.16	1.35	76	1.95	1.09	77	1	98	0.050	100	99	8.4	-0.1	477	342	610	417	408	451	1155	336	74	78	3218	77	73	-0.034	9.34	0.2
9	1.455	1.375	0.16	0.15	1.34	76	1.94	1.09	77	1	99	0.050	101	98	8.3	-0.1	479	342	619	414	405	452	1163	342	74	78	3218	77	72	-0.035	9.25	0.24
10	1.616	1.530	0.16	0.16	1.34	76	1.93	1.09	77	1	99	0.050	100	99	8.2	-0.1	480	342	628	410	402	452	1169	349	74	78	3218	77	72	-0.035	9.36	0.25
11	1.778	1.685	0.16	0.16	1.35	76	1.94	1.12	77	1.1	100	0.050	100	99	8.1	-0.1	486	342	636	406	398	454	1187	353	74	78	3218	77	73	-0.037	9.47	0.25
12	1.940	1.842	0.16	0.16	1.34	76	1.94	1.12	77	1.1	100	0.050	100	100	7.9	-0.2	501	342	645	402	395	457	1219	360	74	78	3218	77	73	-0.037	9.96	0.24
13	2.103	1.999	0.16	0.16	1.33	76	1.94	1.13	77	1.1	101	0.050	101	101	7.8	-0.1	502	341	654	399	392	458	1223	364	75	78	3218	77	72	-0.037	9.69	0.2
14	2.265	2.156	0.16	0.16	1.34	77	1.94	1.13	77	1.1	101	0.050	100	101	7.7	-0.1	504	341	663	395	389	458	1256	369	75	78	3218	77	72	-0.038	10.33	0.11
15	2.427	2.313	0.16	0.16	1.33	77	1.94	1.12	78	1.1	101	0.050	100	100	7.6	-0.1	509	340	673	392	386	460	1268	373	75	78	3218	77	72	-0.039	10.66	0.05
16	2.588	2.470	0.16	0.16	1.34	77	1.93	1.13	78	1.1	101	0.050	100	100	7.5	-0.1	511	340	682	388	382	461	1265	376	75	78	3218	77	72	-0.038	10.11	0.1
17	2.750	2.627	0.16	0.16	1.34	77	1.94	1.12	78	1.1	103	0.050	100	101	7.4	-0.1	515	339	692	384	380	462	1291	380	75	78	3218	77	72	-0.039	10.47	0.07
18	2.912	2.784	0.16	0.16	1.34	77	1.93	1.12	78	1.1	103	0.050	100	101	7.2	-0.2	520	338	701	381	377	463	1304	384	75	78	3218	77	72	-0.040	10.63	0.06
19	3.075	2.942	0.16	0.16	1.34	77	1.94	1.12	78	1.1	103	0.050	101	101	7.1	-0.1	532	337	712	378	375	467	1330	389	75	78	3218	77	72	-0.042	11.64	0.03
20	3.236	3.099	0.16	0.16	1.33	77	1.94	1.13	78	1.1	103	0.050	100	101	7.0	-0.1	543	336	721	375	372	469	1326	393	75	78	3218	77	72	-0.041	11.51	0.03
21	3.397	3.257	0.16	0.16	1.34	78	1.93	1.13	78	1.1	105	0.050	100	101	6.8	-0.2	546	335	730	372	370	471	1355	399	75	78	3218	77	72	-0.042	11.52	0.04
22	3.559	3.414	0.16	0.16	1.34	78	1.94	1.12	79	1.1	105	0.050	100	101	6.7	-0.1	555	335	736	370	367	473	1212	397	75	78	3218	77	72	-0.042	8.86	1.83
23	3.721	3.571	0.16	0.16	1.34	78	1.94	1.12	79	1.1	105	0.050	100	101	6.6	-0.1	557	334	739	368	365	473	1242	397	75	78	3218	77	73	-0.041	9.17	0.94
24	3.883	3.728	0.16	0.16	1.33	78	1.93	1.12	79	1.1	105	0.050	100	101	6.5	-0.1	565	333	741	366	364	474	1260	397	76	78	3218	77	73	-0.041	9.83	0.32
25	4.045	3.886	0.16	0.16	1.33	78	1.93	1.12	79	1.1	105	0.050	100	101	6.4	-0.1	571	332	744	364	363	475	1320	397	76	78	3218	77	72	-0.041	11.06	0.1
26	4.207	4.044	0.16	0.16	1.33	78	1.94	1.12	79	1.1	105	0.050	100	101	6.2	-0.2	576	331	750	362	361	476	1369	400	76	79	3218	77	72	-0.042	11.55	0.05
27	4.369	4.201	0.16	0.16	1.33	79	1.94	1.13	79	1.1	105	0.050	100	101	6.1	-0.1	583	330	756	361	360	478	1391	403	76	79	3218	77	73	-0.042	11.79	0.03
28	4.530	4.359	0.16	0.16	1.34	79	1.94	1.13	80	1.1	106	0.050	100	101	6.0	-0.1	591	329	765	359	359	481	1402	405	76	79	3218	77	73	-0.042	11.91	0.03
29	4.692	4.516	0.16	0.16	1.34	79	1.94	1.12	80	1.1	106	0.050	100	100	5.9	-0.1	594	328	773	358	358	482	1403	409	76	79	3218	77	73	-0.043	11.77	0.02
30	4.855	4.674	0.16	0.16	1.34	79	1.94	1.12	80	1.1	107	0.050	101	101	5.7	-0.2	599	327	781	356	357	484	1410	409	76	79	3218	77	72	-0.042	11.91	0.02
31	5.017	4.831	0.16	0.16	1.33	79	1.94	1.12	80	1.1	107	0.050	100	101	5.6	-0.1	602	326	789	356	356	486	1451	413	76	79	3218	77	73	-0.043	12.23	0.03
32	5.179	4.988	0.16	0.16	1.33	79	1.94	1.12	80	1.1	107	0.050	100	101	5.5	-0.1	603	325	799	355	355	487	1466	415	76	79	3218	77	72	-0.043	12.28	0.03
33	5.341	5.147	0.16	0.16	1.34	79	1.95	1.12	80	1.1	108	0.050	100	102	5.4	-0.1	607	324	808	354	355	490	1478	420	76	79	3218	77	73	-0.043	12.47	0.03
34	5.503	5.304	0.16	0.16	1.34	80	1.94	1.12	80	1.1	108	0.050	100	101	5.2	-0.2	612	323	817	353	354	492	1458	424	76	79	3218	77	73	-0.045	12.19	0.02
35	5.665	5.462	0.16	0.16	1.34	80	1.94	1.13	80	1.1	107	0.050	100	101	5.1	-0.1	613	322	824	352	353	493	1451	426	77	79	3218	77	73	-0.045	12.42	0.03
36	5.828	5.619	0.16	0.16	1.34	80	1.94	1.12	81	1.1	107	0.050	101	100	5.0	-0.1	619	321	830	351	352	495	1431	428	77	79	3218	77	73	-0.044	12.13	0.02

Wood Heater Test Data - ASTM E2780 / ASTM E2515

Intrepid IV - KJM 2/12/18

Run: 5

Manufacturer: Hearth & Home
Model: ~~Intrepid IV~~
Tracking No.: 2264
Project No.: 0135WS038E
Test Date: 02-Jan-18
Beginning Clock Time: 12:44

Total Sampling Time: 158 min
Recording Interval: 1 min
Background Sample Volume: _____ cubic feet

Meter Box Y Factor: 0.981 (1) 0.984 (2) _____ (Amb)

Barometric Pressure:	Begin	Middle	End	Average
	30.36	30.35	30.34	30.35 "Hg

OMNI Equipment Numbers: _____

PM Control Modules: 0035, 0036
Dilution Tunnel MW(dry): 29.00 lb/lb-mole
Dilution Tunnel MW(wet): 28.78 lb/lb-mole
Dilution Tunnel H2O: 2.00 percent
Dilution Tunnel Static: -0.180 "H2O
Tunnel Area: 0.19635 ft2
Pitot Tube Cp: 0.99

Avg. Tunnel Velocity: 13.55 ft/sec.
Initial Tunnel Flow: 147.6 scfm
Average Tunnel Flow: 149.6 scfm
Post-Test Leak Check (1): 0.000 cfm @ 5 in. Hg
Post-Test Leak Check (2): 0.000 cfm @ 5 in. Hg
Average Test Piece Fuel Moisture: 20.11 Dry Basis %

Technician Signature: _____

Velocity Traverse Data	Pt.1	Pt.2	Pt.3	Pt.4	Pt.5	Pt.6	Pt.7	Pt.8	Center	
Initial dP	0.028	0.046	0.048	0.036	0.032	0.046	0.050	0.028	0.050	"H2O
Temp:	98	98	97	98	98	98	98	98	97	°F

V_{strav} 13.52 ft/sec V_{scent} 15.11 ft/sec F_p 0.894

	Particulate Sampling Data														Fuel Weight (lb)		Temperature Data (°F)													Stack Gas Data		
Elapsed Time (min)	Gas Meter 1 (ft^3)	Gas Meter 2 (ft^3)	Sample Rate 1 (cfm)	Sample Rate 2 (cfm)	Orifice dH 1 ("H_2O)	Meter 1 Temp (°F)	Meter 1 Vacuum ("Hg)	Orifice dH 2 ("H_2O)	Meter 2 Temp (°F)	Meter 2 Vacuum ("Hg)	Dilution Tunnel (°F)	Dilution Tunnel Center dP	Pro. Rate 1	Pro. Rate 2	Scale Reading	Weight Change	Firebox Top	Firebox Bottom	Firebox Back	Firebox Left	Firebox Right	Avg. Stove Surface	Firebox Interior	Stack	Filter 1	Dryer Exit 1	Filter 2	Dryer Exit 2	Ambient	Draft ("H_2O)	CO_2 (%)	CO (%)
37	5.991	5.778	0.16	0.16	1.33	80	1.95	1.12	81	1.1	108	0.050	101	102	4.9	-0.1	624	320	836	352	352	497	1432	424	77	79	3218	78	73	-0.044	11.87	0.02
38	6.152	5.935	0.16	0.16	1.34	80	1.95	1.12	81	1.1	108	0.050	100	100	4.8	-0.1	630	320	839	352	352	499	1421	423	77	79	3218	78	72	-0.044	11.95	0.02
39	6.314	6.092	0.16	0.16	1.33	80	1.94	1.12	81	1.1	108	0.050	100	100	4.6	-0.2	632	319	842	352	351	499	1434	421	77	79	3218	78	73	-0.043	11.93	0.03
40	6.477	6.251	0.16	0.16	1.34	80	1.94	1.12	81	1.1	108	0.050	101	102	4.5	-0.1	635	318	845	352	351	500	1452	419	77	79	3218	78	73	-0.042	12.26	0.04
41	6.639	6.408	0.16	0.16	1.34	80	1.94	1.13	81	1.1	108	0.050	100	100	4.4	-0.1	637	317	848	353	351	501	1456	421	77	79	3218	78	72	-0.043	12.41	0.03
42	6.802	6.567	0.16	0.16	1.34	81	1.94	1.12	81	1.1	107	0.050	101	102	4.3	-0.1	625	317	852	353	352	500	1466	416	77	79	3218	78	73	-0.043	12.3	0.59
43	6.965	6.724	0.16	0.16	1.33	81	1.94	1.12	81	1.1	107	0.050	101	100	4.2	-0.1	617	315	855	353	352	498	1462	414	77	79	3218	78	73	-0.044	11.85	0.04
44	7.127	6.882	0.16	0.16	1.33	81	1.95	1.13	82	1.1	107	0.050	100	101	4.1	-0.1	616	315	859	354	352	499	1484	416	77	80	3218	78	73	-0.042	12.35	0.09
45	7.289	7.040	0.16	0.16	1.34	81	1.95	1.12	82	1.1	107	0.050	100	101	3.9	-0.2	617	313	863	354	353	500	1505	417	77	80	3218	78	73	-0.044	12.7	0.12
46	7.451	7.198	0.16	0.16	1.34	81	1.95	1.13	82	1.1	107	0.050	100	101	3.8	-0.1	617	313	868	355	353	501	1530	421	77	79	3218	78	72	-0.044	13.65	0.21
47	7.614	7.356	0.16	0.16	1.33	81	1.95	1.12	82	1.1	108	0.050	101	101	3.7	-0.1	621	313	876	356	354	504	1571	426	77	79	3218	78	72	-0.045	14.15	0.31
48	7.777	7.513	0.16	0.16	1.34	81	1.95	1.12	82	1.1	109	0.050	101	100	3.6	-0.1	632	312	884	357	355	508	1583	436	77	79	3218	78	73	-0.046	14.41	1.23
49	7.940	7.672	0.16	0.16	1.35	81	1.95	1.12	82	1.1	109	0.050	101	102	3.4	-0.2	646	311	892	359	355	513	1577	441	77	79	3218	78	73	-0.047	14.34	1.53
50	8.103	7.829	0.16	0.16	1.34	81	1.95	1.13	82	1.1	110	0.050	101	100	3.3	-0.1	657	310	898	361	357	517	1581	444	77	79	3218	77	72	-0.046	14.4	1.51
51	8.265	7.987	0.16	0.16	1.33	81	1.95	1.12	82	1.1	111	0.050	100	101	3.1	-0.2	667	310	903	363	358	520	1579	445	77	79	3218	77	72	-0.047	14.34	1.67
52	8.428	8.145	0.16	0.16	1.33	81	1.95	1.11	82	1.1	111	0.050	101	101	3.0	-0.1	675	309	908	365	360	523	1580	446	77	79	3218	77	72	-0.047	14.34	1.47
53	8.590	8.303	0.16	0.16	1.34	82	1.96	1.13	83	1.1	111	0.050	100	101	2.9	-0.1	681	308	913	368	362	526	1582	445	77	79	3218	77	72	-0.047	14.37	1.52
54	8.753	8.461	0.16	0.16	1.34	82	1.96	1.12	83	1.1	111	0.050	101	101	2.7	-0.2	684	308	916	370	364	528	1576	447	77	79	3218	77	73	-0.047	14.3	1.55
55	8.916	8.619	0.16	0.16	1.33	82	1.96	1.12	83	1.1	111	0.050	101	101	2.6	-0.1	688	308	920	373	366	531	1576	446	77	79	3218	77	72	-0.046	14.3	1.52
56	9.079	8.777	0.16	0.16	1.34	82	1.95	1.12	83	1.1	110	0.050	101	101	2.5	-0.1	695	307	923	376	368	534	1587	445	77	79	3218	77	72	-0.047	14.19	1.07
57	9.242	8.935	0.16	0.16	1.33	82	1.95	1.12	83	1.1	111	0.050	101	101	2.4	-0.1	702	307	925	378	371	537	1563	444	77	79	3218	77	72	-0.045	13.96	0.36
58	9.404	9.092	0.16	0.16	1.33	82	1.96	1.12	83	1.1	110	0.050	100	100	2.3	-0.1	705	306	926	381	373	538	1531	436	77	79	3218	77	73	-0.045	13.06	0.11
59	9.567	9.251	0.16	0.16	1.34	82	1.96	1.12	83	1.1	109	0.050	101	101	2.2	-0.1	703	306	923	384	376	538	1485	433	77	79	3218	77	73	-0.046	12.3	0.02
60	9.730	9.408	0.16	0.16	1.34	82	1.95	1.12	83	1.1	109	0.050	101	100	2.1	-0.1	703	306	918	386	379	538	1447	425	77	78	3218	77	73	-0.045	11.51	0.01
61	9.895	9.567	0.16	0.16	1.39	82	1.84	1.12	83	1.1	108	0.050	102	101	2.0	-0.1	701	306	912	389	381	538	1413	421	77	78	3218	77	73	-0.042	10.81	0.01
62	10.058	9.724	0.16	0.16	1.34	82	1.96	1.12	83	1.1	109	0.050	101	100	2.0	0	697	305	905	391	384	536	1381	416	78	78	3218	77	73	-0.043	10.41	0.01
63	10.222	9.882	0.16	0.16	1.35	82	1.94	1.12	83	1.1	107	0.050	101	101	1.9	-0.1	693	305	897	394	386	535	1349	411	78	78	3218	77	73	-0.040	10.19	0.08
64	10.385	10.040	0.16	0.16	1.34	82	1.95	1.12	83	1.1	108	0.050	100	101	1.8	-0.1	693	305	888	396	388	534	1307	405	79	78	3218	77	73	-0.041	9.34	0.02
65	10.548	10.198	0.16	0.16	1.34	82	1.95	1.11	83	1.1	107	0.050	100	101	1.8	0	690	304	878	398	391	532	1259	401	78	78	3218	76	73	-0.039	8.4	0.1
66	10.711	10.357	0.16	0.16	1.33	83	1.94	1.12	84	1.1	106	0.050	100	101	1.8	0	686	304	866	400	393	530	1210	392	78	78	3218	76	73	-0.040	7.44	0.2
67	10.874	10.514	0.16	0.16	1.34	83	1.95	1.12	84	1.1	105	0.050	100	100	1.7	-0.1	679	304	853	401	394	526	1171	389	78	78	3218	76	73	-0.038	7.12	0.26
68	11.037	10.672	0.16	0.16	1.34	83	1.94	1.12	84	1.1	105	0.050	100	100	1.7	0	670	304	840	402	396	522	1133	385	78	78	3218	76	73	-0.038	6.65	0.27
69	11.200	10.831	0.16	0.16	1.35	83	1.95	1.11	84	1.1	105	0.050	100	101	1.7	0	661	304	826	404	397	518	1107	382	78	78	3218	76	73	-0.038	6.58	0.24
70	11.363	10.989	0.16	0.16	1.35	83	1.94	1.13	84	1.1	104	0.050	100	100	1.6	-0.1	653	303	812	404	398	514	1074	376	78	78	3218	76	73	-0.036	6.21	0.26
71	11.527	11.148	0.16	0.16	1.35	83	1.95	1.11	84	1.1	103	0.050	100	101	1.6	0	645	304	798	405	399	510	1048	372	78	78	3218	76	73	-0.035	6.06	0.34
72	11.691	11.305	0.16	0.16	1.34	83	1.94	1.12	84	1.1	103	0.050	100	99	1.6	0	639	303	785	406	401	507	1023	368	78	77	3218	76	73	-0.035	5.98	0.34
73	11.854	11.463	0.16	0.16	1.34	83	1.95	1.12	84	1.1	103	0.050	100	100	1.6	0	632	303	772	406	402	503	1000	365	78	77	3218	76	73	-0.034	5.81	0.36

Wood Heater Test Data - ASTM E2780 / ASTM E2515

Intrepid IV - KJM 2/12/18

Run: 5

Manufacturer: Hearth & Home
Model: ~~Intrepid IV~~
Tracking No.: 2264
Project No.: 0135WS038E
Test Date: 02-Jan-18
Beginning Clock Time: 12:44

Total Sampling Time: 158 min
Recording Interval: 1 min
Background Sample Volume: _____ cubic feet

Meter Box Y Factor: 0.981 (1) 0.984 (2) _____ (Amb)

Barometric Pressure:	Begin	Middle	End	Average
	30.36	30.35	30.34	30.35 "Hg

OMNI Equipment Numbers: _____

PM Control Modules: 0035, 0036
Dilution Tunnel MW(dry): 29.00 lb/lb-mole
Dilution Tunnel MW(wet): 28.78 lb/lb-mole
Dilution Tunnel H2O: 2.00 percent
Dilution Tunnel Static: -0.180 "H2O
Tunnel Area: 0.19635 ft2
Pitot Tube Cp: 0.99

Avg. Tunnel Velocity: 13.55 ft/sec.
Initial Tunnel Flow: 147.6 scfm
Average Tunnel Flow: 149.6 scfm
Post-Test Leak Check (1): 0.000 cfm @ 5 in. Hg
Post-Test Leak Check (2): 0.000 cfm @ 5 in. Hg
Average Test Piece Fuel Moisture: 20.11 Dry Basis %

Technician Signature: _____

Velocity Traverse Data	Pt.1	Pt.2	Pt.3	Pt.4	Pt.5	Pt.6	Pt.7	Pt.8	Center	
Initial dP	0.028	0.046	0.048	0.036	0.032	0.046	0.050	0.028	0.050	"H2O
Temp:	98	98	97	98	98	98	98	98	97	°F

V_{strav} 13.52 ft/sec V_{scent} 15.11 ft/sec F_p 0.894

	Particulate Sampling Data														Fuel Weight (lb)		Temperature Data (°F)												Stack Gas Data		
Elapsed Time (min)	Gas Meter 1 (ft^3)	Gas Meter 2 (ft^3)	Sample Rate 1 (cfm)	Sample Rate 2 (cfm)	Orifice dH 1 ("H_2O)	Meter 1 Temp (°F)	Meter 1 Vacuum ("Hg)	Orifice dH 2 ("H_2O)	Meter 2 Temp (°F)	Meter 2 Vacuum ("Hg)	Dilution Tunnel (°F)	Dilution Tunnel Center dP	Pro. Rate 1	Pro. Rate 2	Scale Reading	Weight Change	Firebox Top	Firebox Bottom	Firebox Back	Firebox Left	Firebox Right	Avg. Stove Surface	Firebox Interior	Stack	Filter 1	Dryer Exit 1	Filter 2	Dryer Exit 2	Ambient	Draft ("H_2O)	CO_2 (%)	CO (%)
74	12.018	11.622	0.16	0.16	1.34	83	1.95	1.12	84	1.1	103	0.050	100	101	1.5	-0.1	627	303	759	407	402	500	979	361	78	77	3218	76	73	-0.035	5.72	0.36
75	12.181	11.780	0.16	0.16	1.34	83	1.94	1.12	84	1.1	103	0.050	100	100	1.5	0	621	303	746	408	403	496	963	360	78	77	3218	76	73	-0.034	5.86	0.39
76	12.344	11.939	0.16	0.16	1.34	83	1.95	1.12	84	1.1	102	0.050	100	101	1.5	0	616	303	735	408	403	493	946	358	78	77	3218	75	73	-0.033	5.92	0.42
77	12.507	12.097	0.16	0.16	1.35	83	1.94	1.12	84	1.1	101	0.050	100	100	1.5	0	609	303	723	409	404	490	929	354	78	77	3218	75	73	-0.032	5.72	0.46
78	12.671	12.255	0.16	0.16	1.34	83	1.94	1.12	84	1.1	101	0.050	100	100	1.5	0	608	303	712	408	404	487	913	352	78	77	3218	75	73	-0.032	5.73	0.48
79	12.834	12.414	0.16	0.16	1.35	83	1.95	1.12	84	1.1	102	0.050	100	101	1.4	-0.1	604	304	701	409	405	485	899	350	78	76	3218	75	73	-0.033	5.6	0.51
80	12.998	12.571	0.16	0.16	1.34	83	1.94	1.12	84	1.1	101	0.050	100	99	1.4	0	601	304	691	409	405	482	884	346	77	76	3218	75	73	-0.031	5.54	0.54
81	13.162	12.731	0.16	0.16	1.34	83	1.94	1.12	84	1.1	101	0.050	100	101	1.4	0	596	304	681	410	405	479	871	345	77	76	3218	75	73	-0.031	5.5	0.57
82	13.326	12.888	0.16	0.16	1.34	83	1.95	1.12	84	1.1	101	0.050	100	99	1.4	0	592	304	671	410	405	476	859	342	77	76	3218	75	73	-0.031	5.43	0.6
83	13.489	13.046	0.16	0.16	1.34	83	1.94	1.12	84	1.1	101	0.050	100	100	1.4	0	588	304	662	410	406	474	847	341	77	76	3218	75	73	-0.030	5.43	0.64
84	13.653	13.205	0.16	0.16	1.33	83	1.94	1.11	84	1.1	100	0.050	100	100	1.4	0	583	304	653	410	406	471	836	339	77	76	3218	74	73	-0.030	5.4	0.66
85	13.816	13.363	0.16	0.16	1.35	83	1.95	1.13	84	1.1	100	0.050	100	100	1.3	-0.1	580	304	645	410	406	469	825	336	77	75	3218	74	73	-0.029	5.34	0.68
86	13.979	13.523	0.16	0.16	1.35	83	1.95	1.12	84	1.1	100	0.050	100	101	1.3	0	576	304	637	410	406	467	812	334	77	75	3218	74	73	-0.029	5.16	0.69
87	14.143	13.680	0.16	0.16	1.35	83	1.95	1.12	84	1.1	99	0.050	100	99	1.3	0	573	303	629	410	405	464	802	333	77	75	3218	74	72	-0.029	5.18	0.74
88	14.307	13.838	0.16	0.16	1.35	83	1.95	1.12	84	1.1	99	0.050	100	100	1.3	0	569	304	621	410	405	462	792	330	77	75	76	74	73	-0.028	5.08	0.74
89	14.471	13.997	0.16	0.16	1.35	83	1.95	1.12	84	1.1	99	0.050	100	100	1.3	0	566	303	613	410	406	460	782	328	77	75	76	74	73	-0.028	5.03	0.77
90	14.635	14.155	0.16	0.16	1.35	83	1.95	1.12	84	1.1	99	0.050	100	100	1.3	0	563	303	606	410	405	457	773	325	77	75	76	74	72	-0.027	4.94	0.79
91	14.799	14.314	0.16	0.16	1.35	83	1.95	1.12	84	1.1	98	0.050	100	100	1.2	-0.1	558	303	599	410	405	455	767	324	77	75	76	74	73	-0.027	4.98	0.84
92	14.962	14.472	0.16	0.16	1.34	83	1.95	1.12	84	1.1	98	0.050	99	100	1.2	0	557	303	593	410	404	453	762	322	77	75	76	74	72	-0.027	5.16	0.88
93	15.126	14.630	0.16	0.16	1.35	83	1.95	1.12	84	1.1	98	0.050	100	100	1.2	0	553	303	586	410	404	451	756	322	77	74	76	74	73	-0.026	5.11	0.89
94	15.289	14.789	0.16	0.16	1.35	83	1.95	1.11	84	1.1	97	0.050	99	100	1.2	0	552	303	580	409	403	449	745	319	77	74	76	73	73	-0.026	4.83	0.83
95	15.453	14.947	0.16	0.16	1.34	83	1.95	1.12	84	1.1	98	0.050	100	100	1.2	0	552	303	574	409	403	448	738	316	77	74	76	73	72	-0.025	4.71	0.84
96	15.617	15.106	0.16	0.16	1.35	83	1.95	1.12	85	1.1	98	0.050	100	100	1.2	0	550	302	568	409	403	446	731	316	77	74	76	73	73	-0.025	4.79	0.89
97	15.781	15.264	0.16	0.16	1.35	84	1.95	1.11	84	1.1	98	0.050	100	100	1.1	-0.1	548	302	562	409	402	445	725	313	77	74	76	73	73	-0.025	4.67	0.89
98	15.944	15.422	0.16	0.16	1.35	83	1.95	1.12	85	1.1	98	0.050	99	99	1.1	0	545	302	557	409	402	443	718	313	76	74	76	73	73	-0.025	4.67	0.92
99	16.108	15.581	0.16	0.16	1.36	84	1.95	1.13	85	1.1	98	0.050	100	100	1.1	0	542	301	551	408	401	441	710	311	76	74	76	73	73	-0.025	4.54	0.93
100	16.273	15.739	0.16	0.16	1.34	83	1.95	1.12	84	1.1	97	0.050	101	100	1.1	0	539	301	546	408	401	439	704	311	76	74	76	73	72	-0.025	4.61	0.96
101	16.437	15.898	0.16	0.16	1.35	83	1.95	1.12	84	1.1	97	0.050	100	100	1.1	0	536	301	541	408	400	437	697	309	76	74	76	73	72	-0.025	4.45	0.96
102	16.600	16.056	0.16	0.16	1.35	84	1.96	1.12	85	1.1	97	0.050	99	99	1.1	0	532	301	536	408	400	435	692	307	76	73	76	73	72	-0.025	4.41	0.97
103	16.764	16.214	0.16	0.16	1.35	84	1.95	1.12	84	1.1	96	0.050	100	99	1.0	-0.1	529	300	531	407	399	433	682	303	76	73	76	73	72	-0.024	4.24	0.97
104	16.928	16.373	0.16	0.16	1.35	84	1.95	1.12	84	1.1	96	0.050	100	100	1.0	0	527	300	526	407	398	432	675	303	76	73	76	73	72	-0.023	4.28	1.02
105	17.092	16.531	0.16	0.16	1.35	84	1.96	1.12	84	1.1	95	0.050	100	99	1.0	0	524	300	521	406	397	430	668	300	76	73	76	73	72	-0.024	4.21	1.03
106	17.255	16.690	0.16	0.16	1.36	84	1.95	1.12	84	1.1	96	0.050	99	100	1.0	0	522	299	517	406	396	428	661	300	76	73	76	72	72	-0.023	4.17	1.07
107	17.419	16.848	0.16	0.16	1.35	84	1.95	1.11	85	1.1	95	0.050	100	99	1.0	0	517	299	512	406	395	426	655	297	76	73	76	72	73	-0.023	4	1.06
108	17.583	17.007	0.16	0.16	1.35	84	1.95	1.12	84	1.1	95	0.050	100	100	1.0	0	514	299	507	405	394	424	650	297	76	73	76	72	72	-0.022	4.08	1.08
109	17.747	17.166	0.16	0.16	1.35	84	1.95	1.12	84	1.1	95	0.050	100	100	1.0	0	511	299	503	405	394	422	642	294	76	73	75	72	72	-0.021	4.04	1.09
110	17.912	17.324	0.16	0.16	1.34	84	1.95	1.12	85	1.1	95	0.050	100	99	1.0	0	511	298	499	404	392	421	637	292	76	73	75	72	72	-0.022	3.92	1.1

Wood Heater Test Data - ASTM E2780 / ASTM E2515

Intrepid IV - KJM 2/12/18

Run: 5

Manufacturer: Hearth & Home
Model: ~~Intrepid IV~~
Tracking No.: 2264
Project No.: 0135WS038E
Test Date: 02-Jan-18
Beginning Clock Time: 12:44

Total Sampling Time: 158 min
Recording Interval: 1 min
Background Sample Volume: _____ cubic feet

Meter Box Y Factor: 0.981 (1) 0.984 (2) _____ (Amb)

Barometric Pressure:	Begin	Middle	End	Average
	30.36	30.35	30.34	30.35 "Hg

OMNI Equipment Numbers: _____

PM Control Modules: 0035, 0036
Dilution Tunnel MW(dry): 29.00 lb/lb-mole
Dilution Tunnel MW(wet): 28.78 lb/lb-mole
Dilution Tunnel H2O: 2.00 percent
Dilution Tunnel Static: -0.180 "H2O
Tunnel Area: 0.19635 ft2
Pitot Tube Cp: 0.99

Avg. Tunnel Velocity: 13.55 ft/sec.
Initial Tunnel Flow: 147.6 scfm
Average Tunnel Flow: 149.6 scfm
Post-Test Leak Check (1): 0.000 cfm @ 5 in. Hg
Post-Test Leak Check (2): 0.000 cfm @ 5 in. Hg
Average Test Piece Fuel Moisture: 20.11 Dry Basis %

Technician Signature: _____

Velocity Traverse Data	Pt.1	Pt.2	Pt.3	Pt.4	Pt.5	Pt.6	Pt.7	Pt.8	Center	
Initial dP	0.028	0.046	0.048	0.036	0.032	0.046	0.050	0.028	0.050	"H2O
Temp:	98	98	97	98	98	98	98	98	97	°F

V_{strav} 13.52 ft/sec V_{scent} 15.11 ft/sec F_p 0.894

	Particulate Sampling Data														Fuel Weight (lb)		Temperature Data (°F)												Stack Gas Data		
Elapsed Time (min)	Gas Meter 1 (ft^3)	Gas Meter 2 (ft^3)	Sample Rate 1 (cfm)	Sample Rate 2 (cfm)	Orifice dH 1 ("H_2O)	Meter 1 Temp (°F)	Meter 1 Vacuum ("Hg)	Orifice dH 2 ("H_2O)	Meter 2 Temp (°F)	Meter 2 Vacuum ("Hg)	Dilution Tunnel (°F)	Dilution Tunnel Center dP	Pro. Rate 1	Pro. Rate 2	Scale Reading	Weight Change	Firebox Top	Firebox Bottom	Firebox Back	Firebox Left	Firebox Right	Avg. Stove Surface	Firebox Interior	Stack	Filter 1	Dryer Exit 1	Filter 2	Dryer Exit 2	Ambient	Draft ("H_2O)	CO_2 (%)	CO (%)
111	18.076	17.482	0.16	0.16	1.35	84	1.95	1.12	85	1.1	95	0.050	100	99	0.9	-0.1	509	298	495	403	391	419	631	292	76	73	75	72	73	-0.022	3.91	1.11
112	18.240	17.641	0.16	0.16	1.35	84	1.95	1.11	85	1.1	95	0.050	100	100	0.9	0	506	297	490	403	390	417	625	290	76	73	75	72	73	-0.021	3.92	1.12
113	18.404	17.799	0.16	0.16	1.35	84	1.96	1.12	84	1.1	94	0.050	99	99	0.9	0	504	297	486	402	389	416	619	286	76	72	75	72	72	-0.021	3.76	1.08
114	18.568	17.959	0.16	0.16	1.34	84	1.96	1.11	84	1.1	95	0.050	100	101	0.9	0	502	297	482	402	388	414	615	288	76	72	75	72	73	-0.021	3.91	1.14
115	18.731	18.116	0.16	0.16	1.35	84	1.95	1.12	84	1.1	94	0.050	99	99	0.9	0	499	296	478	401	387	412	612	284	76	72	75	72	72	-0.021	3.81	1.14
116	18.895	18.274	0.16	0.16	1.35	84	1.95	1.12	84	1.1	94	0.050	99	99	0.9	0	496	296	475	400	386	411	606	284	76	72	75	72	72	-0.021	3.79	1.16
117	19.059	18.434	0.16	0.16	1.36	84	1.96	1.12	84	1.1	94	0.050	99	101	0.9	0	495	295	471	399	385	409	601	283	76	72	75	72	72	-0.021	3.74	1.16
118	19.223	18.592	0.16	0.16	1.36	84	1.95	1.12	84	1.1	93	0.050	99	99	0.8	-0.1	491	295	467	399	383	407	595	280	76	72	75	72	72	-0.021	3.69	1.15
119	19.387	18.751	0.16	0.16	1.36	84	1.95	1.11	84	1.1	93	0.050	99	100	0.8	0	489	295	464	398	382	406	619	280	76	72	75	72	71	-0.020	5.12	1.18
120	19.551	18.909	0.16	0.16	1.36	84	1.96	1.12	84	1.1	92	0.050	99	99	0.8	0	490	294	461	397	381	405	636	278	75	72	75	72	72	-0.020	5.72	1.04
121	19.716	19.068	0.17	0.16	1.36	84	1.96	1.12	84	1.1	92	0.050	100	100	0.8	0	492	294	459	397	379	404	639	279	75	72	75	71	71	-0.020	5.71	1.02
122	19.881	19.227	0.16	0.16	1.35	84	1.96	1.12	84	1.1	92	0.050	100	100	0.8	0	496	293	457	396	378	404	638	279	75	72	75	71	71	-0.020	5.53	1
123	20.044	19.385	0.16	0.16	1.35	84	1.96	1.12	84	1.1	92	0.050	99	99	0.7	-0.1	498	293	455	396	377	404	634	280	75	72	75	71	71	-0.021	5.34	1.04
124	20.208	19.544	0.16	0.16	1.35	84	1.95	1.12	84	1.1	92	0.050	99	100	0.7	0	500	292	453	395	375	403	632	279	75	72	75	71	71	-0.020	5.2	1.07
125	20.373	19.703	0.17	0.16	1.35	84	1.95	1.12	84	1.1	92	0.050	100	100	0.7	0	503	292	452	395	375	403	628	279	75	72	74	71	71	-0.020	5.21	1.11
126	20.536	19.861	0.16	0.16	1.35	84	1.95	1.12	84	1.1	92	0.050	99	99	0.7	0	503	291	450	395	373	402	625	278	75	72	74	71	71	-0.021	5.06	1.1
127	20.700	20.021	0.16	0.16	1.35	84	1.95	1.12	84	1.1	92	0.050	99	100	0.7	0	504	291	448	395	372	402	620	277	75	72	74	71	71	-0.019	4.92	1.11
128	20.865	20.179	0.16	0.16	1.35	84	1.96	1.12	84	1.1	92	0.050	100	99	0.6	-0.1	504	290	446	395	371	401	614	277	74	72	74	71	71	-0.020	4.73	1.14
129	21.029	20.337	0.16	0.16	1.36	84	1.96	1.12	84	1.1	92	0.050	99	99	0.6	0	503	290	445	394	371	401	610	275	74	72	74	71	71	-0.019	4.61	1.11
130	21.193	20.496	0.16	0.16	1.36	84	1.95	1.13	84	1.1	92	0.050	99	100	0.6	0	502	289	443	394	370	400	606	275	74	71	74	71	71	-0.020	4.55	1.17
131	21.357	20.655	0.16	0.16	1.36	84	1.95	1.12	84	1.1	92	0.050	99	100	0.6	0	501	289	441	394	369	399	599	274	74	71	74	71	71	-0.020	4.43	1.15
132	21.521	20.814	0.16	0.16	1.35	83	1.95	1.12	84	1.1	91	0.050	99	100	0.6	0	500	288	439	393	368	398	593	273	74	71	74	71	71	-0.019	4.17	1.15
133	21.686	20.973	0.16	0.16	1.36	83	1.96	1.11	84	1.1	91	0.050	100	100	0.6	0	500	288	437	393	367	397	588	273	74	71	74	71	70	-0.019	4.11	1.12
134	21.851	21.131	0.16	0.16	1.36	83	1.95	1.12	84	1.1	91	0.050	100	99	0.5	-0.1	498	287	434	392	367	396	584	271	74	71	74	71	70	-0.019	4.1	1.16
135	22.015	21.291	0.16	0.16	1.36	83	1.95	1.12	84	1.1	91	0.050	99	100	0.5	0	496	287	433	391	366	395	579	268	74	71	74	71	70	-0.018	3.96	1.12
136	22.179	21.449	0.16	0.16	1.35	83	1.95	1.12	84	1.1	91	0.050	99	99	0.5	0	494	287	430	391	365	393	576	267	74	71	74	70	71	-0.019	3.99	1.15
137	22.344	21.607	0.17	0.16	1.35	83	1.95	1.12	84	1.1	91	0.050	100	99	0.5	0	493	287	428	389	364	392	572	267	74	71	73	70	70	-0.019	3.94	1.16
138	22.508	21.766	0.16	0.16	1.35	83	1.95	1.12	84	1.1	91	0.050	99	100	0.5	0	491	286	426	389	364	391	568	265	73	71	73	70	70	-0.018	3.83	1.14
139	22.672	21.924	0.16	0.16	1.35	83	1.95	1.12	84	1.1	91	0.050	99	99	0.5	0	490	286	424	388	363	390	563	265	73	71	73	70	70	-0.018	3.86	1.16
140	22.836	22.084	0.16	0.16	1.36	83	1.95	1.12	84	1.1	90	0.050	99	100	0.4	-0.1	487	285	421	387	362	388	559	265	73	71	73	70	70	-0.019	3.82	1.15
141	23.000	22.242	0.16	0.16	1.36	83	1.96	1.11	84	1.1	90	0.050	99	99	0.4	0	485	285	419	386	362	387	555	263	73	71	73	70	70	-0.018	3.74	1.13
142	23.164	22.401	0.16	0.16	1.36	83	1.95	1.12	84	1.1	90	0.050	99	100	0.4	0	483	285	417	384	361	386	551	261	73	71	73	70	70	-0.018	3.68	1.14
143	23.328	22.560	0.16	0.16	1.36	83	1.95	1.11	84	1.1	90	0.050	99	100	0.4	0	480	284	415	383	360	384	547	259	73	71	73	70	71	-0.017	3.63	1.18
144	23.493	22.718	0.16	0.16	1.36	83	1.96	1.12	84	1.1	90	0.050	100	99	0.4	0	478	284	413	382	359	383	544	259	73	71	73	70	71	-0.018	3.59	1.19
145	23.657	22.877	0.16	0.16	1.36	83	1.96	1.12	84	1.1	90	0.050	99	100	0.4	0	477	284	412	381	358	382	598	262	73	70	73	70	71	-0.017	5.95	1.08
146	23.822	23.036	0.16	0.16	1.36	83	1.95	1.11	84	1.1	90	0.050	100	100	0.3	-0.1	480	284	411	380	358	383	625	263	73	70	73	70	71	-0.018	6.34	0.77
147	23.986	23.194	0.16	0.16	1.36	83	1.95	1.12	83	1.1	90	0.050	99	99	0.3	0	483	284	411	379	357	383	635	265	73	70	73	70	71	-0.018	6.3	0.73

Wood Heater Test Data - ASTM E2780 / ASTM E2515

Intrepid IV - KJM 2/12/18

Run: 5

Manufacturer: Hearth & Home
Model: ~~Intrepid IV~~
Tracking No.: 2264
Project No.: 0135WS038E
Test Date: 02-Jan-18
Beginning Clock Time: 12:44

Total Sampling Time: 158 min
Recording Interval: 1 min
Background Sample Volume: _____ cubic feet

Meter Box Y Factor: 0.981 (1) 0.984 (2) _____ (Amb)

Barometric Pressure:	Begin	Middle	End	Average
	30.36	30.35	30.34	30.35 "Hg

OMNI Equipment Numbers: _____

PM Control Modules: 0035, 0036
Dilution Tunnel MW(dry): 29.00 lb/lb-mole
Dilution Tunnel MW(wet): 28.78 lb/lb-mole
Dilution Tunnel H2O: 2.00 percent
Dilution Tunnel Static: -0.180 "H2O
Tunnel Area: 0.19635 ft2
Pitot Tube Cp: 0.99

Avg. Tunnel Velocity: 13.55 ft/sec.
Initial Tunnel Flow: 147.6 scfm
Average Tunnel Flow: 149.6 scfm
Post-Test Leak Check (1): 0.000 cfm @ 5 in. Hg
Post-Test Leak Check (2): 0.000 cfm @ 5 in. Hg
Average Test Piece Fuel Moisture: 20.11 Dry Basis %

Technician Signature: _____

Velocity Traverse Data	Pt.1	Pt.2	Pt.3	Pt.4	Pt.5	Pt.6	Pt.7	Pt.8	Center	
Initial dP	0.028	0.046	0.048	0.036	0.032	0.046	0.050	0.028	0.050	"H2O
Temp:	98	98	97	98	98	98	98	98	97	°F

V_{strav} 13.52 ft/sec V_{scent} 15.11 ft/sec F_p 0.894

	Particulate Sampling Data														Fuel Weight (lb)		Temperature Data (°F)													Stack Gas Data		
Elapsed Time (min)	Gas Meter 1 (ft^3)	Gas Meter 2 (ft^3)	Sample Rate 1 (cfm)	Sample Rate 2 (cfm)	Orifice dH 1 ("H_2O)	Meter 1 Temp (°F)	Meter 1 Vacuum ("Hg)	Orifice dH 2 ("H_2O)	Meter 2 Temp (°F)	Meter 2 Vacuum ("Hg)	Dilution Tunnel (°F)	Dilution Tunnel Center dP	Pro. Rate 1	Pro. Rate 2	Scale Reading	Weight Change	Firebox Top	Firebox Bottom	Firebox Back	Firebox Left	Firebox Right	Avg. Stove Surface	Firebox Interior	Stack	Filter 1	Dryer Exit 1	Filter 2	Dryer Exit 2	Ambient	Draft ("H_2O)	CO_2 (%)	CO (%)
148	24.150	23.353	0.16	0.16	1.36	83	1.95	1.12	83	1.1	91	0.050	99	100	0.3	0	487	284	412	378	357	384	643	267	73	70	73	70	71	-0.018	6.27	0.71
149	24.315	23.511	0.17	0.16	1.35	83	1.95	1.12	83	1.1	91	0.050	100	99	0.3	0	490	283	412	377	356	384	643	267	73	70	73	70	71	-0.019	6.08	0.76
150	24.479	23.670	0.16	0.16	1.35	83	1.95	1.12	83	1.1	91	0.050	99	100	0.2	-0.1	493	283	413	376	356	384	644	269	73	70	73	70	71	-0.018	5.98	0.79
151	24.643	23.829	0.16	0.16	1.35	83	1.96	1.12	83	1.1	91	0.050	99	100	0.2	0	494	284	414	376	356	385	646	268	73	70	73	70	71	-0.018	5.86	0.82
152	24.807	23.987	0.16	0.16	1.36	83	1.95	1.12	83	1.1	91	0.050	99	99	0.2	0	496	284	415	375	356	385	646	272	73	70	73	69	71	-0.018	5.87	0.87
153	24.971	24.146	0.16	0.16	1.36	83	1.95	1.11	83	1.1	91	0.050	99	100	0.2	0	496	284	416	374	356	385	647	271	73	70	73	69	71	-0.018	5.73	0.89
154	25.134	24.304	0.16	0.16	1.36	83	1.95	1.12	83	1.1	90	0.050	99	99	0.2	0	496	284	417	374	356	385	646	272	73	70	73	69	71	-0.018	5.7	0.93
155	25.299	24.463	0.16	0.16	1.36	83	1.96	1.11	83	1.1	90	0.050	100	100	0.1	-0.1	496	284	417	373	356	385	646	271	73	70	73	69	71	-0.019	5.61	0.95
156	25.463	24.622	0.16	0.16	1.36	83	1.95	1.11	83	1.1	90	0.050	99	100	0.1	0	497	284	418	373	356	386	643	270	73	70	73	69	72	-0.019	5.51	0.98
157	25.627	24.780	0.16	0.16	1.36	83	1.95	1.11	83	1.1	90	0.050	99	99	0.0	-0.1	497	284	419	372	356	386	644	272	73	70	73	69	71	-0.019	5.46	1.03
158	25.792	24.939	0.17	0.16	1.36	83	1.95	1.12	83	1.1	90	0.050	100	100	0.0	0	498	285	420	372	357	386	667	273	73	70	73	69	71	-0.018	6.48	0.7
Avg/Tot	25.792	24.939	0.16	0.16	1.34	82		1.12	82		100	0.050	100	100								76.8				75	1814	74	72	-0.031		

Wood Heater Lab Data - ASTM E2780 / ASTM E2515

Intrepid IV - KJM 2/12/18

Manufacturer: Hearth & Home
Model: ~~Intrepid IV~~
Tracking No.: 2264
Project No.: 0135WS038E
Run #: 5
Date: 1/2/18

Equipment Numbers:

TRAIN 1 (First Hour emissions)

Sample Component	Reagent	Filter, Probe or Dish #	Weights		
			Final, mg	Tare, mg	Particulate, mg
B. Front filter catch	Filter	D370	110.6	110.2	0.4
C. Rear filter catch	Filter				0.0
D. Probe catch*	Probe				0.0
E. Filter seals catch*	Seals				0.0

Sub-Total Total Particulate, mg: 0.4

TRAIN 1 (Post First Hour Change-out)

Sample Component	Reagent	Filter, Probe or Dish #	Weights		
			Final, mg	Tare, mg	Particulate, mg
B. Front filter catch	Filter	D371	111.7	111.7	0.0
C. Rear filter catch	Filter	D328	111.6	111.8	-0.2
D. Probe catch*	Probe	8	115593.6	115593.1	0.5
E. Filter seals catch*	Seals	R549	3274.2	3273.8	0.4

Sub-Total Total Particulate, mg: 0.7

Train 1 Aggregate Total Particulate, mg: **1.1**

TRAIN 2

Sample Component	Reagent	Filter, Probe or Dish #	Weights		
			Final, mg	Tare, mg	Particulate, mg
A. Front filter catch	Filter	D329	112.5	112.1	0.4
B. Rear filter catch	Filter	D330	110.4	110.6	-0.2
C. Probe catch*	Probe	9	115692.6	115692.1	0.5
D. Filter seals catch*	Seals	R550	3406.7	3406.0	0.7

Total Particulate, mg: **1.4**

AMBIENT

Sample Component	Reagent	Filter # or Probe #	Weights		
			Final, mg	Tare, mg	Particulate, mg
A. Front filter catch*	Filter				0.0

Total Particulate, mg: **0.0**

*Particulate catch that results in a negative number, is assumed to be zero for probes and seals, negative numbers for filters are assumed to be part of the seal weight.

Component	Equations:
A. Front filter catch	Final (mg) - Tare (mg) = Particulate, mg
B. Rear filter catch	Final (mg) - Tare (mg) = Particulate, mg
C. Probe catch	Final (mg) - Tare (mg) = Particulate, mg

Technician Signature: 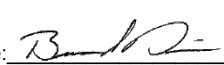

Wood Heater Test Results - ASTM E2780 / ASTM E2515

Manufacturer: Hearth & Home
Model: Intrepid IV
Project No.: 0135WS038E
Tracking No.: 2264
Run: 5
Test Date: 01/02/18

Burn Rate	**1.30 kg/hr dry**
Average Tunnel Temperature	100 degrees Fahrenheit
Average Gas Velocity in Dilution Tunnel - vs	13.55 feet/second
Average Gas Flow Rate in Dilution Tunnel - Qsd	8978.1 dscf/hour
Average Delta p	0.050 inches H20
Total Time of Test	158 minutes

	AMBIENT	SAMPLE TRAIN 1	SAMPLE TRAIN 2	FIRST HOUR FILTER (TRAIN 1)
Total Sample Volume - Vm	0.000 cubic feet	25.792 cubic feet	24.939 cubic feet	9.730 cubic feet
Average Gas Meter Temperature	72 degrees Fahrenheit	82 degrees Fahrenheit	82 degrees Fahrenheit	79 degrees Fahrenheit
Total Sample Volume (Standard Conditions) - Vmstd	0.000 dscf	25.095 dscf	24.293 dscf	9.516 dscf
Total Particulates - m_n	0 mg	1.1 mg	1.4 mg	0.4 mg
Particulate Concentration (dry-standard) - C_r/C_s	0.000000 grams/dscf	0.00004 grams/dscf	0.00006 grams/dscf	0.00004 grams/dscf
Total Particulate Emissions - E_T	0.00 grams	1.04 grams	1.36 grams	0.38 grams
Particulate Emission Rate	0.00 grams/hour	0.39 grams/hour	0.52 grams/hour	0.38 grams/hour
Emissions Factor		0.30 g/kg	0.40 g/kg	0.14 g/kg
Difference from Average Total Particulate Emissions		0.16 grams	0.16 grams	
	Dual Train Comparison Results Are Acceptable			

FINAL AVERAGE RESULTS

Complete Test Run	
Total Particulate Emissions - E_T	1.20 grams
Particulate Emission Rate	**0.46 grams/hour**
Emissions Factor	0.35 grams/kg
First Hour Emissions	
Total Particulate Emissions - E_T	0.38 grams
Particulate Emission Rate	0.38 grams/hour
Emissions Factor	0.14 grams/kg
7.5% of Average Total Particulate Emissions	0.09 grams

QUALITY CHECKS

Filter Temps < 90 °F	NOT ACCEPTABLE
Filter Face Velocity (47 mm)	OK
Dryer Exit Temp < 80F	OK
Leakage Rate	OK
Ambient Temp (55-90°F)	OK
Negative Probe Weight Eval.	OK
Pro-Rate Variation	OK
Stove Surface ΔT	OK
Train Precesion 7.5%	13.60
Train Precision 0.5g/kg	0.10

Technician Signature: 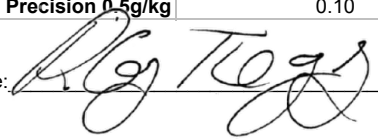

Wood Heater Lab Data - ASTM E2780 / ASTM E2515

Manufacturer:	Hearth & Home	Equipment Numbers:	
Model:	Intrepiod IV		
Tracking No.:	2264		
Project No.:	0135WS038E		
Run #:	5		
Date:	1/2/18		

Uncorrected

TRAIN 1 (First Hour emissions)

Sample Component	Reagent	Filter, Probe or Dish #	Weights		
			Final, mg	Tare, mg	Particulate, mg
B. Front filter catch	Filter	D370	110.6	110.2	0.4
C. Rear filter catch	Filter				0.0
D. Probe catch*	Probe				0.0
E. Filter seals catch*	Seals				0.0

Sub-Total	Total Particulate, mg:	0.4

TRAIN 1 (Post First Hour Change-out)

Sample Component	Reagent	Filter, Probe or Dish #	Weights		
			Final, mg	Tare, mg	Particulate, mg
B. Front filter catch	Filter	D371	111.7	111.7	0.0
C. Rear filter catch	Filter	D328	111.8	111.8	0.0
D. Probe catch*	Probe	8	115593.6	115593.1	0.5
E. Filter seals catch*	Seals	R549	3274.2	3273.8	0.4

Sub-Total	Total Particulate, mg:	0.9
Train 1 Aggregate	Total Particulate, mg:	**1.3**

TRAIN 2

Sample Component	Reagent	Filter, Probe or Dish #	Weights		
			Final, mg	Tare, mg	Particulate, mg
A. Front filter catch	Filter	D329	112.5	112.1	0.4
B. Rear filter catch	Filter	D330	110.6	110.6	0.0
C. Probe catch*	Probe	9	115692.6	115692.1	0.5
D. Filter seals catch*	Seals	R550	3406.7	3406.0	0.7

	Total Particulate, mg:	**1.6**

AMBIENT

Sample Component	Reagent	Filter # or Probe #	Weights		
			Final, mg	Tare, mg	Particulate, mg
A. Front filter catch*	Filter				0.0

	Total Particulate, mg:	**0.0**

*Particulate catch that results in a negative number, is assumed to be zero for probes and seals, negative numbers for filters are assumed to be part of the seal weight.

Component	Equations:
A. Front filter catch	Final (mg) - Tare (mg) = Particulate, mg
B. Rear filter catch	Final (mg) - Tare (mg) = Particulate, mg
C. Probe catch	Final (mg) - Tare (mg) = Particulate, mg

Technician Signature:_____

Wood Heater Test Results - ASTM E2780 / ASTM E2515

Manufacturer: Hearth & Home
Model: Intrepid IV
Project No.: 0135WS038E
Tracking No.: 2264
Run: 5
Test Date: 01/02/18

Burn Rate	**1.30 kg/hr dry**
Average Tunnel Temperature	100 degrees Fahrenheit
Average Gas Velocity in Dilution Tunnel - vs	13.55 feet/second
Average Gas Flow Rate in Dilution Tunnel - Qsd	8978.1 dscf/hour
Average Delta p	0.050 inches H20
Total Time of Test	158 minutes

Uncorrected

	AMBIENT	SAMPLE TRAIN 1	SAMPLE TRAIN 2	FIRST HOUR FILTER (TRAIN 1)
Total Sample Volume - Vm	0.000 cubic feet	25.792 cubic feet	24.939 cubic feet	9.730 cubic feet
Average Gas Meter Temperature	72 degrees Fahrenheit	82 degrees Fahrenheit	82 degrees Fahrenheit	79 degrees Fahrenheit
Total Sample Volume (Standard Conditions) - Vmstd	0.000 dscf	25.095 dscf	24.293 dscf	9.516 dscf
Total Particulates - m_n	0 mg	1.3 mg	1.6 mg	0.4 mg
Particulate Concentration (dry-standard) - C_f/C_s	0.000000 grams/dscf	0.00005 grams/dscf	0.00007 grams/dscf	0.00004 grams/dscf
Total Particulate Emissions - E_T	0.00 grams	1.22 grams	1.56 grams	0.38 grams
Particulate Emission Rate	0.00 grams/hour	0.47 grams/hour	0.59 grams/hour	0.38 grams/hour
Emissions Factor		0.36 g/kg	0.45 g/kg	0.14 g/kg
Difference from Average Total Particulate Emissions		0.17 grams	0.17 grams	
	Dual Train Comparison Results Are Acceptable			

FINAL AVERAGE RESULTS

Complete Test Run	
Total Particulate Emissions - E_T	1.39 grams
Particulate Emission Rate	**0.53 grams/hour**
Emissions Factor	0.41 grams/kg
First Hour Emissions	
Total Particulate Emissions - E_T	0.38 grams
Particulate Emission Rate	0.38 grams/hour
Emissions Factor	0.14 grams/kg
7.5% of Average Total Particulate Emissions	0.10 grams

QUALITY CHECKS

Filter Temps < 90 °F	NOT ACCEPTABLE
Filter Face Velocity (47 mm)	OK
Dryer Exit Temp < 80F	OK
Leakage Rate	OK
Ambient Temp (55-90°F)	OK
Negative Probe Weight Eval.	OK
Pro-Rate Variation	OK
Stove Surface ΔT	OK
Train Precesion 7.5%	11.95
Train Precision 0.5g/kg	0.10

Technician Signature:_____

Wood Heater Efficiency Results - CSA B415.1

Manufacturer: Hearth & Home **Technician Signature:** 

Model: ~~Intrepiod IV~~ Intrepid IV - KJM 2/12/18

Date: 01/02/18

Run: 5

Control #: 0135WS038E

Test Duration: 158

Output Category: III

Test Results in Accordance with CSA B415.1-09

	HHV Basis	LHV Basis
Overall Efficiency	73.6%	79.5%
Combustion Efficiency	95.7%	95.7%
Heat Transfer Efficiency	77%	83.1%

Output Rate (kJ/h)	18,814	17,847	**(Btu/h)**
Burn Rate (kg/h)	1.29	2.85	**(lb/h)**
Input (kJ/h)	25,575	24,261	**(Btu/h)**

Test Load Weight (dry kg)	3.40	7.49	**dry lb**
MC wet (%)	16.74529611		
MC dry (%)	20.11		
Particulate (g)	0.46		
CO (g)	214		
Test Duration (h)	2.63		

Emissions	Particulate	CO
g/MJ Output	0.01	4.33
g/kg Dry Fuel	0.13	63.07
g/h	0.17	81.42
lb/MM Btu Output	0.02	10.06

Air/Fuel Ratio (A/F)	13.34

VERSION: **2.2** **12/14/2009**

OMNI-Test Laboratories, Inc. **ASTM E2780 Wood Heater Run Sheets**

Client: Hearth & Home Project Number: 0135WS038E Run Number: 5

Model: Intrepid IV Tracking Number: 2264 Date: 1/2/18

Test Crew: BDavis

OMNI Equipment ID numbers:

ASTM E2515 Lab Sheet

Assembled By:

BDavis

Date/Time in Dessicator:

1/2/18 1555

	Weighing #1	Weighing #2	Weighing #3	Weighing #4	Weighing #5
Date/Time:	1/4/18 0850	1/5/18			
R/H %:	5.2	9.3			
Temp:	72.1	70.6			
200 mg Audit:	0.2000	0.1999			
2 g Audit:	1.9998	1.9999			
100 g Audit:	99.9978	99.9981			
Initials:	BL	BL			

Train	Element	ID #	Tare (mg)	Weight (mg)	Weight (mg)	Weight (mg)	Weight (mg)	Weight (mg)
A (First Hour)	Front Filter	D370	110.2	110.8	110.6	✓		
	Rear Filter							
	Probe							
	O-Ring Set							
A (Remainder)	Front Filter	D371	111.7	111.6	111.7	✓		
	Rear Filter	D328	111.8	111.5	111.6	✓		
	Probe	8	115593.1	115593.7	115593.6	✓		
	O-Ring Set	R549	3273.8	3274.3	3274.2	✓		
B	Front Filter	D329	112.1	112.5	112.5	✓		
	Rear Filter	D330	110.6	110.3	110.4	✓		
	Probe	9	115692.1	115692.6	115692.6	✓		
	O-Ring Set	R550	3406.0	3406.9	3406.7	✓		
BG	Filter							

Technician Signature: BDavis Date: 1/18/18

OMNI-Test Laboratories, Inc. **ASTM E2780 Wood Heater Run Sheets**

Client: Hearth & Home Project Number: 0135WS038E Run Number: 5

Model: Intrepid IV Tracking Number: 2264 Date: 1/2/18

Test Crew: B DAVIS

OMNI Equipment ID numbers:

Wood Heater Supplemental Data

Start Time: 12:44 Booth #: E1

Stop Time: 15:22

Stack Gas Leak Check:

Initial: good Final: good

Sample Train Leak Check:

A: 0.0 @ 5 "Hg

B: 0.0 @ 5 "Hg

Calibrations: Span Gas CO_2: 16.74 CO: 4.20/901

	Pre Test		Post Test	
	Zero	Span	Zero	Span
Time	12:27	12:27	15:30	15:30
CO_2	0.00	16.77	0.00	16.75
CO	0.000/0	4.208/899	0.000/0	4.205/897

Air Velocity (ft/min): Initial: 450 Final: 450

Scale Audit (lbs): Initial: 10.0 Final: 10.0

Pitot Tube Leak Test: Initial: good Final: good

Stack Diameter (in): 6"

Induced Draft: 0.0"

% Smoke Capture: 100%

Flue Pipe Cleaned Prior to First Test in Series:

Date: 12/19/17 Initials: BC

	Initial	Middle	Ending
P_b (in/Hg)	30.36	30.35	30.34
RH (%)	16.1	16.8	17.0
Ambient (°F)	73	72	71

Background Filter Volume: N/A

Tunnel Traverse		
Microtector Reading	dP (in H_2O)	T(°F)
1	.028	98
2	.046	98
3	.048	97
4	.036	98
1	.032	98
2	.046	98
3	.050	98
4	.028	98
Center:		
	.050	97

Tunnel Static Pressure (in H_2O):	
Beginning of Test	End of Test
-.18	-.18

Technician Signature: [signature] Date: 1/10/18

OMNI-Test Laboratories, Inc. **ASTM E2780 Wood Heater Run Sheets**

Client: Hearth & Home Project Number: 0135WS038E Run Number: 5

Model: Intrepid IV Tracking Number: 2264 Date: 1/2/18

Test Crew: BDAVIS

OMNI Equipment ID numbers:

Wood Heater Fuel Data

Fuel: Douglas fir, untreated and air dried, standard grade or better dimensional lumber

Pre-Burn Fuel

Calibration: Cal Value (1) = 12% Actual Reading 12
Cal Value (2) = 22% Actual Reading 22

Piece:	Length:	Reading:	Piece:	Length:	Reading:
1	36 in	19.2	7	in	
2	36 in	22.8	8	in	
	36 ft	22.1			
3	36 in	20.6	9	in	
4	in		10	in	
5	in		11	in	
6	in		12	in	

Total Pre-Burn Fuel Weight: 15.1 Pre-Burn Fuel Average Moisture: 21.1%

Time (clock): 1045 Room Temperature (F): 69 Initials: BD

Test Fuel

Firebox Volume (ft³): 1.31 Test Fuel Piece Length (in): 13.0"
Load Weight Range (lb): 8.25 - 7.17 - 10.08 Total Wet Fuel Load Weight (lb): 9.0

Fuel Type & Amount: 2 x 4: 5 4 x 4: Ø
Weight (with spacers): 9.0 Weight (with spacers): Ø

Piece:	Weight (lbs):	Moisture Readings (%DB):			Fuel Type:
1	1.5	20.4	21.1	20.2	2x4
2	1.5	19.2	20.2	19.2	2x4
3	1.5	19.2	20.3	20.1	2x4
4	1.5	19.7	19.9	20.5	2x4
5	1.4	20.4	21.0	20.3	2x4
6					
7					

Spacer Moisture Readings (%DB)

14.3	12.6	10.1	18.2	14.3			
12.1	13.9	17.4	19.3	11.1			
16.5	15.4	14.3	16.6				
10.2	17.1	14.7	17.1				

Technician Signature: BD Time (clock): 1145 Room Temperature (F): 70 Date: 1/18/18 Initials: BD

OMNI-Test Laboratories, Inc. **ASTM E2780 Wood Heater Run Sheets**

Client: Hearth & Home Project Number: 0135WS038E Run Number: 5

Model: Intrepid IV Tracking Number: 2264 Date: 1/2/18

Test Crew: B Davis

OMNI Equipment ID numbers:

Wood Heater Run Notes

Air Control Settings

Primary: fully open, Pushed to the Left.

Secondary: fixed

Tertiary/Pilot: N/A

Fan: N/A

Preburn Notes

Time	Notes
10	Raked coals
30	Raked coals
50	Raked coals
75	Raked coals, Leveled coal bed.

Test Notes

Sketch test fuel configuration:

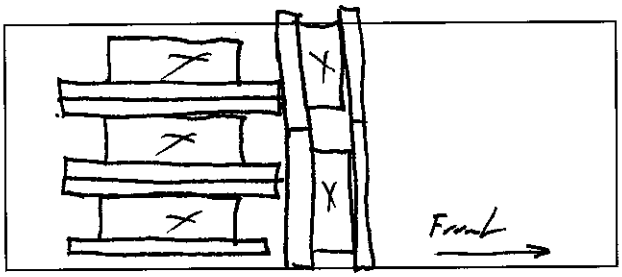

Start up procedures & Timeline:

Bypass: closed @ 1 min
Fuel loaded by: 50 seconds
Door closed at: 1 minute
Primary air: At test setting entire test

Notes: N/A

Time	Notes
60	changed front filter in train A.

Technician Signature: BD

Date: 1/18/18

Section 4

Quality Assurance/Quality Control

QUALITY ASSURANCE/QUALITY CONTROL

OMNI follows the guidelines of ISO/IEC 17025, "General Requirements for the Competence of Testing and Calibration Laboratories," and the quality assurance/quality control (QA/QC) procedures found in *OMNI*'s Quality Assurance Manual.

OMNI's scope of accreditation includes, but is not limited to, the following:

- ANSI (American National Standards Institute) for certification of product to safety standards.
- To perform product safety testing by the International Accreditation Service, Inc. (formerly ICBO ES) under accreditation as a testing laboratory designated TL-130.
- To perform product safety testing as a "Certification Organization" by the Standards Council of Canada (SCC).
- Serving as a testing laboratory for the certification of wood heaters by the U.S. Environmental Protection Agency.

This report is issued within the scope of *OMNI*'s accreditation. Accreditation certificates are available upon request.

The manufacturing facilities and quality control system for the production of the Intrepid FlexBurn 2115 at Hearth and Home Technologies were evaluated to determine if sufficient to maintain conformance with OMNI's requirements for product certification. OMNI has concluded that the manufacturing facilities, processes, and quality control system are adequate to produce the appliance congruous with the standards and model codes to which it was evaluated.

This report shall not be reproduced, except in full, without the written approval of OMNI-Test Laboratories, Inc.

Manufacturer's Quality Assurance Plan

The following quality assurance plan has been developed to ensure all that all units within the model line are similar in all material respects that would affect emissions to the sample tested under this report, in accordance with § 60.533 (m) / § 60.5475 (m).

Hearth & Home Technologies – Halifax Manufacturing

EPA Certification Quality Assurance Plan

1. Purpose

   The purpose of the EPA Certification Quality Assurance Plan is to:

   a. Ensure that all wood and wood pellet fueled stoves manufactured by Hearth & Home Technologies, at the Halifax manufacturing facility, meet the requirements set forth in 40 CFR Part 60.
   b. Fulfill the requirements for a Quality Assurance Plan as set forth in 40 CFR Part 60.533 paragraph (m)

2. Scope

   The Quality Assurance Plan is intended to cover all EPA Certified wood and wood pellet fueled stoves manufactured by Hearth & Home Technologies, at the Halifax manufacturing facility.

3. Requirements
   a. Inspections for Conformance to Specifications
      i. The manufacturer shall inspect one stove for every 150 stoves manufactured, within a model line, to verify conformance to the tolerances for all components that affect emissions as listed in 40 CFR Part 60.533 paragraph (k)(2), (3), and (4). The exact serial number of the stove inspected may be within 10 stoves before or 10 stoves after the serial number that occurs exactly on the inspection schedule.
   b. Inspections for Conformance to Emissions:
      i. The manufacturer or his authorized representative shall conduct an emissions test on a randomly selected stove from within a model line, certified under 40 CFR Part 60.533, according to the schedule describer below.
         1. Schedule
            a. Model lines where weighted average certification results were 70% or less than the standard
               i. Model lines with fewer than 2500 stoves manufactured per year
                  1. One for every 10,000 stoves manufactured
               ii. Model lines with greater than 2500 stoves manufactured per year
                  1. One for every 10,000 stoves manufactured or triennially(Whichever is more frequent)
            b. Model lines where weighted average certification test results were within 30% of the standard
               i. Model lines with fewer than 2500 stoves manufactured per year
                  1. One for every 5,000 stoves manufactured

ii. Model lines with greater than 2500 stoves manufactured per year
    1. One for every 5,000 stoves manufactured or annually(Whichever is more frequent)

c. Audits of Conformance to the Quality Assurance Plan
    i. The third-party certifier shall perform at least one unannounced audit of the manufacturer's compliance to the approved Quality Assurance Plan described in this document.
        1. The third-part certifier shall submit a copy of the report, fully detailing each audit, to the EPA(Administrator) and the manufacturer within 30 days of the audit.
        2. The manufacturer will submit corrective actions and/or responses to any deficiencies, identified in the audit, to the third-party certifier and the EPA(Administrator) within 30 days of receiving each audit report.

d. Alternate Schedules for Conformance to Specifications and Emissions
    i. If two consecutive passing audits are conducted for either Conformance to Specifications or Conformance to Emissions as specified in section 3 paragraph (a) or (b) of this document, the frequency of testing may be modified to skip every other required test.
    ii. If five consecutive passing audits are conducted under the modified schedule described in section 3 paragraph (d)(i) of this document, the frequency of testing shall be further modified to skip three consecutive required tests after each required test is completed.
    iii. Auditing shall resume on the frequency specified in section 3 paragraph (a) or (b), as applicable, if an audit failure occurs under a modified schedule.

K List Audit Standard Work

05/25/17

Owner: EPA/OOBA Auditor

1. Receive unit.
    a. Audit unit using appropriate K-List.
    b. Enter all measured values into electronic sheet.
2. If the unit passes without any issues:
    a. Submit completed sheet to Quality Engineer (Jared Gadd) & NPD Manager (Corie Podschelne).
3. If the unit fails to comply
    a. Summarize failures in email to Quality Engineer (Jared Gadd) & NPD Manager (Corie Podschelne).
    b. Submit completed sheet.
    c. Quarantine failed unit with NCM Hold Tag and notify Production scheduler.

Owner: Quality Engineer

1. If audit passes, review results, store passed audits in central location in Quality Folder:

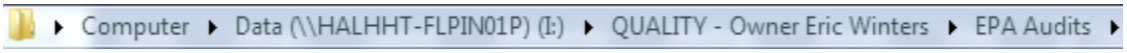

2. If audit fails:
    a. Schedule 8D Team Meeting to Review Failure
        i. Members Included:
            1. Quality Engineer
            2. NPD Engineer
            3. Mfg Engineer for Line
            4. Quality Manager
            5. Line Lead
    b. Drive & Review 8D Corrective Actions in ICAR Meeting.
    c. Save 8D & Corrective Actions in EPA Audit folder for corresponding unit.
    d. Forward failed audit, 8D and Corrective Action to Omni (sbutton@omni-test.com).

EPA Parameter Inspection Sheet Intrepid IV 2115 Woodstove

Inspector: _____ **Facility:** _____

Date of Inspection: _____ **Unit Serial Number:** _____

Build Date: **Catalytic? (highlight one):** **YES** **NO**

	Unit of Measure	Dimension	Measurement Procedure	Actual	Variance	Tolerance	OK
Firebox							
Lower Firebox: Depth	Inches	8.40"	From back of andiron to the front of access cover			.25"	
Height	Inches	10.33"	From grate to bottom of damper housing			.25"	
Width	Inches	16.20"	From side brick to side brick			.25"	
Upper Firebox: Depth	Inches	7.89"	From back of andiron to the front of damper housing			.25"	
Height	Inches	5.85"	From bottom of damper housing to griddle bottom			.25"	
Width	Inches	16.20"	From side brick to side brick			.25"	
Door Opening: Width	Inches	13.20"	Widest point			.25"	
Height	Inches	9.57"	Top of fettle to top of door arch			.25"	
Griddle Opening: Width	Inches	14.22"	Widest point			.25"	
Height	Inches	7.20"	Measue at centerline front to back			.25"	
Removeable Grate	NA		Present?				
Flue Collar							
Internal Dimensions	Inches	6" id Dia.	Inside diameter			.25"	
Bypass Damper Opening							
Location	Inches	11.73"	From grate to bottom of damper opening			.25"	
Width	Inches	8.61"	Widest point			.25"	
Height	Inches	3.16"	Widest point			.25"	
Gasket (Present & Complete)	Nominal	5/16" Rope	Confirm gasket covers complete perimeter				
Mechanism (operation & Lock			Confirm proper operating and locking				
Gap (Observable Gap?)			Yes/No				
Controlled Air Flapper Opening							
Width	Inches	4.25"	Widest point			(+/-) 5%	
Height	Inches	1.25"	Widest point				
Uncontrolled Air inlet Opening							
Width	Inches	4.28"	Widest point			(+/-) 5%	
Height	Inches	1.58"	Widest point				
Controlled Air Outlet							
Location			Either side of Door opening				

Width (4 PLCS)	Inches	.25"	Widest point (4 openings, 2 per side)			(+/-) 5%	
Height (4 PLCS)	Inches	3.00"	Widest point (4 openings, 2 per side)				

	Unit of Measure	Dimension	Measurement Procedure	Actual	Variance	Tolerance	OK
Uncontrolled Air Outlets							
Location			Center bottom of fireback				
5 holes total							
2 of 5 holes	inches	.43 dia	Measure with pins			(+/-) 5%	
3 of 5 holes	inches	.28 dia	Measure with pins				
Engine							
Location			Behind Fireback				
8 semicylindrical holes	inches	.375 dia	Measure before assembly			(+/-) 5%	
6 semicylindrical holes	inches	.312 dia	Measure before assembly				
Gaskets							
Front Doors	nominal	5/16" dia Rope	Present and Continuous				
Glass	nominal	3/16" dia Rope	Present and Continuous				
Griddle	nominal	5/16" dia Rope	Present and Continuous				
Ash Door	nominal	3/8" dia Rope	Present and Continuous				
Refractory							
Side Bricks, 2Pcs6"x10.25"x1.25"	nominal		Confirm Present				
Exterior Dimensions							
Height	24.3"		Measure from floor to top of stove			.25"	
Width	22.3"		Measure at widest point side to side			.25"	
Depth	22.8"		Measure from front of ashlip to back of rear shield			.25"	
Location			Rear of stove				
			Confirm label is securely attached				
			Confirm label is for Intrepid 2115				
			Confirm manufacturing date code is present				
			Record serial # and manufacture date code				
Instructions							
Location			Inside stove				
			Confirm that the Intrepid 2115 Owners Manual is present				

Sample Analysis

Analysis Worksheets
Tared Filter, Probe, and O-Ring Data

OMNI-Test Laboratories, Inc.

ASTM E2780 Wood Heater Run Sheets

Client: Hearth & Home Project Number: 0135WS038E Run Number: 1

Model: Intrepid IV Tracking Number: 2264 Date: 12/20/17

Test Crew: B. Davis

OMNI Equipment ID numbers:

ASTM E2515 Lab Sheet

Assembled By: B Davis

Date/Time in Dessicator: 12/21/17 0805

	Weighing #1	Weighing #2	Weighing #3	Weighing #4	Weighing #5
Date/Time:	1/2/18 0820	1/4/18 0830			
R/H %:	8.8	5.2			
Temp:	69.6	72.4			
200 mg Audit:	0.2000	0.20000			
2 g Audit:	1.9998	1.9998			
100 g Audit:	99.9978	99.9978			
Initials:	BR	BR			

Train	Element	ID #	Tare (mg)	Weight (mg)	Weight (mg)	Weight (mg)	Weight (mg)	Weight (mg)
A (First Hour)	Front Filter	D350	111.2	112.3	112.4	✓		
	Rear Filter	N/A						
	Probe	N/A						
	O-Ring Set	N/A						
A (Remainder)	Front Filter	D352	111.1	111.3	111.2	✓		
	Rear Filter	D351	111.4	111.4	111.5	✓		
	Probe	2	115014.5	115015.1	115015.3	✓		
	O-Ring Set	R541	3541.5	3542.1	3542.3	✓		
B	Front Filter	D353	111.2 ~~111.0~~ BR	111.8	111.9	✓		
	Rear Filter	D354	111.0	111.0	111.1	✓		
	Probe	3	116008.4	116009.1	116009.3	✓		
	O-Ring Set	R542	3499.0	3500.2	3500.4	✓		
BG	Filter	NA						

Technician Signature: BD Date: 1/12/18

OMNI-Test Laboratories, Inc. **ASTM E2780 Wood Heater Run Sheets**

Client: Hearth & Home Project Number: 0135WS038E Run Number: 2

Model: Intrepid IV Tracking Number: 2264 Date: 12/21/17

Test Crew: B Davis

OMNI Equipment ID numbers:

ASTM E2515 Lab Sheet

Assembled By:

BD

Date/Time in Dessicator:

12/21/17 1600

	Weighing #1	Weighing #2	Weighing #3	Weighing #4	Weighing #5
Date/Time:	1/2/18 0820	1/4/18 0854	1-5-18	1/9/18 0840	
R/H %:	8.8	5.2	9.3	8.9	
Temp:	69.6	72.4	70.6	71.2	
200 mg Audit:	0.2000	0.2000	0.1999	0.2000	
2 g Audit:	1.9998	1.9998	1.9999	2.0000	
100 g Audit	99.9978	99.9978	99.9981	99.9979	
Initials:	BA	BA	BA	BA	

Train	Element	ID #	Tare (mg)	Weight (mg)	Weight (mg)	Weight (mg)	Weight (mg)	Weight (mg)
A (First Hour)	Front Filter	D355	111.2	162.9	162.4	162.2	✓	
	Rear Filter							
	Probe							
	O-Ring Set							
A (Remainder)	Front Filter	D357	111.2	136.8	136.4	136.3	✓	
	Rear Filter	D356	110.8	111.6	111.6	✓		
	Probe	OES 3	114768.3	114770.8	114771.0	✓		
	O-Ring Set	R543	3574.5	3575.5	3575.7	✓		
B	Front Filter	D358	110.6	191.6	191.1	190.5	190.5	
	Rear Filter	D359	111.1	111.8	111.9	✓		
	Probe	OES4	114145.2	114147.4	114148.1	114148.1	✓	
	O-Ring Set	R544	3529.0	3530.3	3530.5	✓		
BG	Filter							

Technician Signature: BD Date: 1/10/17

OMNI-Test Laboratories, Inc. **ASTM E2780 Wood Heater Run Sheets**

Client: Hearth & Home Project Number: 0135WS038E Run Number: 3

Model: Intrepid IV Tracking Number: 2264 Date: 12/21/17

Test Crew: B Davis

OMNI Equipment ID numbers:

ASTM E2515 Lab Sheet

Assembled By:

B Davis

Date/Time in Dessicator:

12/22/17 0810

	Weighing #1	Weighing #2	Weighing #3	Weighing #4	Weighing #5
Date/Time:	1/4/18 0820	1/9/18 0850	1/5/18		
R/H %:	8.8	5.2	9.3		
Temp:	69.6	72.4	70.6		
200 mg Audit:	0.2000	0.2000	0.1999		
2 g Audit:	1.9998	1.9998	1.9999		
100 g Audit:	99.9978	99.9978	99.9981		
Initials:	DL	DL	DL		

Train	Element	ID #	Tare (mg)	Weight (mg)	Weight (mg)	Weight (mg)	Weight (mg)	Weight (mg)
A (First Hour)	Front Filter	D360	111.2	111.1	111.0 ✓			
	Rear Filter							
	Probe							
	O-Ring Set							
A (Remainder)	Front Filter	D362	110.6	111.0	111.0 ✓			
	Rear Filter	D361	110.8	110.2	110.5 ✓			
	Probe	4	114857.9	114858.3	114858.5 ✓			
	O-Ring Set	RS45	4154.6	4155.5	4155.6 ✓			
B	Front Filter	D363	110.9	111.3	111.4 ✓			
	Rear Filter	D364	111.0	110.7	110.9 ✓			
	Probe	OES5 ✓	113573.4	113574.0	113574.2 ✓			
	O-Ring Set	RS46	3329.6	3329.7	3330.2	3330.0	✓	
BG	Filter							

Technician Signature: [signature] Date: 1/12/18

OMNI-Test Laboratories, Inc. **ASTM E2780 Wood Heater Run Sheets**

Client: Hearth & Home Project Number: 0135WS038E Run Number: 4

Model: Intrepid IV Tracking Number: 2264 Date: 12/22/17

Test Crew: B Davis

OMNI Equipment ID numbers:

ASTM E2515 Lab Sheet

Assembled By:

B Davis

Date/Time in Dessicator:

12:00 12/22/17

	Weighing #1	Weighing #2	Weighing #3	Weighing #4	Weighing #5
Date/Time:	1/2/18 0820	1/4/18 0850	1/5/18		
R/H %:	8.8	5.2	9.3		
Temp:	69.6	72.4	70.6		
200 mg Audit:	0.20000	0.20000	0.19999		
2 g Audit:	1.9998	1.9998	1.9999		
100 g Audit:	99.9978	99.9974	99.9981		
Initials:	BL	BL	BL		

Train	Element	ID #	Tare (mg)	Weight (mg)	Weight (mg)	Weight (mg)	Weight (mg)	Weight (mg)
A (First Hour)	Front Filter	D365	111.5	111.7	111.8 ✓			
	Rear Filter							
	Probe	OES6 BL						
	O-Ring Set							
A (Remainder)	Front Filter	D367	111.3	111.6	111.7 ✓			
	Rear Filter	D366	111.0 110.9 BL	110.9	111.1 ✓			
	Probe	7 OES	113709.7	113710.3	113710.7	113710.5 ✓		
	O-Ring Set	R547	3397.3 110.9 1443 BL	3397.8	3397.9 ✓			
B	Front Filter	D368	111.3	111.3	111.5 ✓			
	Rear Filter	D369	111.3	111.0	111.1 ✓			
	Probe	7	114981.2	114981.5	114981.7 ✓			
	O-Ring Set	R548	3295.5	3296.5	3296.6 ✓			
BG	Filter							

Technician Signature: BD Date: 1/18/18

OMNI-Test Laboratories, Inc. **ASTM E2780 Wood Heater Run Sheets**

Client: Hearth & Home Project Number: 0135WS038E Run Number: 5

Model: Intrepid IV Tracking Number: 2264 Date: 1/2/18

Test Crew: D Davis

OMNI Equipment ID numbers:

ASTM E2515 Lab Sheet

Assembled By:

D Davis

Date/Time in Dessicator:

1/2/18 1555

	Weighing #1	Weighing #2	Weighing #3	Weighing #4	Weighing #5
Date/Time:	1/4/18 0850	1/5/18			
R/H %:	5.2	9.3			
Temp:	72.1	70.6			
200 mg Audit:	0.2000	0.1999			
2 g Audit:	1.9998	1.9999			
100 g Audit:	99.9978	99.9981			
Initials:	BL	BL			

Train	Element	ID #	Tare (mg)	Weight (mg)	Weight (mg)	Weight (mg)	Weight (mg)	Weight (mg)
A (First Hour)	Front Filter	D370	110.2	110.8	110.6	✓		
	Rear Filter							
	Probe							
	O-Ring Set							
A (Remainder)	Front Filter	D371	111.7	111.6	111.7	✓		
	Rear Filter	D328	111.8	111.5	111.6	✓		
	Probe	8	115593.1	115593.7	115593.6	✓		
	O-Ring Set	R549	3273.8	3274.3	3274.2	✓		
B	Front Filter	D329	112.1	112.5	112.5	✓		
	Rear Filter	D330	110.6	110.3	110.4	✓		
	Probe	9	115692.1	115692.6	115692.6	✓		
	O-Ring Set	R550	3406.0	3406.9	3406.7	✓		
BG	Filter							

Technician Signature: D Davis Date: 1/18/18

Tare Sheet: (check one) Probes____ 47mm Filters____ 100mm Filters____ O-Ring Pair ✓

Prepared By: B. Davis Balance ID #: OMNI-00637 Thermohygrometer ID #: OMNI-00592 Audit Weight ID #/Mass: OMNI-00283A 1 5 gram

Placed in Dessicator: Date: ____ Time: ____ ID #	Date: 12/12/17 Time: 3:00 RH %: 6.4 T (°F): 73.2 Audit: 4999.9	Date: 12/18/17 Time: 10:04 RH %: 7.3 T (°F): 74.8 Audit: 5000.0	Date: 12-20-17 Time: 10:25 RH %: 6.6 T (°F): 73.6 Audit: 5000.0	Date: Time: RH %: T (°F): Audit:	Date Used	Project Number	Run No.
R541	3541.4	3541.5			12/20/17	0135WS038E	1
R542	3498.6	3499.0			↓	↓	↓
R543	3574.4	3574.5			12/21/17	0135WS038E	2
R544	3529.1	3529.6			↓	↓	↓
R545	4154.6	4154.6			12/21/17	0135WS038E	3
R546	3329.4	3329.6			↓	↓	↓
R547	3397.1	3397.3			12/22/17	0135WS038E	4
R548	3295.4	3295.5			↓	↓	↓
R549	3273.6	3273.8			1/2/18	0135WS038E	5
R550	3405.9	3406.0			↓	↓	↓
R551	4129.3	4129.1			1/3/18	0135WS038E-cal	1
R552	4173.9	4173.4	4173.2 ✓		↓	↓	↓
R553	3349.6	3349.5			1/4/18	0135WS038E-cal	2
R554	3367.2	3367.0			↓	↓	↓
R555	3307.9	3308.0			1/5/18	0135WS038E-cal	3
R556	3303.1	3303.1			↓	↓	↓
R557	-						
R558	-						
R559	-						
R560	-						
	Initials: A	Initials: DL	Initials: DL	Initials:			

Final Technician Signature: _____ Date: 1/10/18 Evaluator signature: _____ 1/22/2018

Tare Sheet: (check one) **Probes** ✓ **47mm Filters**____ **100mm Filters**____ **O-Ring Pair**____

Prepared By: B Davis Balance ID #: OMNI-00637 Thermohygrometer ID #: OMNI-00592 Audit Weight ID #/Mass: OMNI-00283A 1 100 gram

Placed in Dessicator: Date: Time: / ID #	Date: 12/12/17 Time: 3:00 RH %: 7.4 T (°F): 72.6 Audit: 99997.8	Date: 12/18/17 Time: 10:04 RH %: 8.3 T (°F): 74.3 Audit: 99997.8	Date: 12-20-17 Time: 10:25 RH %: 9.2 T (°F): 74.6 Audit: 99997.8	Date: 1/2/18 Time: 0830 RH %: 8.9 T (°F): 71.2 Audit: 99997.8	Date Used	Project Number	Run No.
2	115015.4	115014.5	"	"	12/20/17	0135WS038E	1
3	~~114857.9~~ 116008.2	116008.6	116008.4	"	↓	↓	↓
OES 3	114718.6	114768.3	"	"	12/21/17	0135WS038E	2
OES 4	114104.3	114145.0	114145.2	"	↓	↓	↓
4	114852.9	114857.9	"	"	12/21/17	0135WS038E	3
OES 5	113573.6	113573.4	"	"	↓	↓	↓
OES 6	113709.9	DL/115347.3 113709.7	"	"	12/22/17	0135WS038E	4
6	115348.7	115349.3	115348.6	115348.8	~~1/3/18~~ ↓	0135WS038E - CAL	~~1~~ ↓
7	114981.0	114981.2	"	"	↓	↓	↓
8	115593.1	115593.1	"	"	1/2/18	0135WS038E	5
9	~~115693.5~~ 115692.6	115692.1	"	"	↓	↓	↓
11	114187.8	114187.0	"	"	1/3/18	0135WS038E - CAL	1
12	-						
13	-						
14	-						
15	-						
16	-						
17	-						
18	-						
20	-						
	Initials:	Initials:	Initials:	Initials:			

Final Technician Signature: Date: 1/10/18 Evaluator signature: 1/22/2018

Control No. P-SFDP-0002.xls, Effective date: 2/1/2017

Tare Sheet: Probes___ 47mm Filters✓ 100mm Filters___ O-Ring Pair___

Date/time Placed in Dessicator:

Thermohygrometer ID #: OMNE-00592

Prepared By: B Davis

Analytical Balance ID #: OMNE-00637

Audit Weight ID #/Mass: OMNE-002534 / 200 mg

ID #	Date: 12/12/17 Time: 3:00 RH %: 7.4 T (°F): 72.6 Audit: 500.1	Date: 12/14/17 Time: 1045 RH %: 8.1 T (°F): 73.6 Audit: 200.0	Date: 12/18/17 Time: 1002 RH %: 8.0 T (°F): 74.2 Audit: 200.0	Date: Time: RH %: T (°F): Audit:	Date Used	Project Number	Run No.
D328	111.8	111.8	"		1/2/18	0135WS038E	5
D329	112.0	112.1	"				
D330	110.8	110.6	"				
D331	111.5	111.4	"		1/3/18	0135WS038E - CAT	1
D332	110.9	110.7	"				
D333	111.9	111.8	"				
D334	111.9	111.9	"				
D335	111.5	111.7	"				
D336	111.0	111.2	"		1/4/18	0135WS038E - CAT	2
D337	111.4	111.6	"				
D338	111.1	111.3	"				
D339	111.7	111.9	"				
D340	111.5	111.7	"				
D341	111.2	111.4	"		1/5/18	0135WS038E - CAT	3
D342	111.2	111.2	"				
D343	112.3	112.1	"				
D344	111.7	111.5	"				
D345	111.1	111.7	111.9				
D346	111.4	111.4	"				
D347	111.5	111.4	"		1/3/18	0135WS038E-CAT	4
D348	111.1	111.0	"				
D349	111.3	111.4	"				
	Initials: AC	Initials: AC	Initials: AC	Initials:			

207

Final Technician Signature: _____ Date: 1/4/18

Control No. P-SFDP-0001.xls, Effective date: 9/9/2015

Evaluator signature: _____ 1/22/2018

Tare Sheet: Probes___ 47mm Filters✓ 100mm Filters___ O-Ring Pair___

Date/time Placed in Dessicator:

Thermohygrometer ID #: OMWI-00592

Prepared By: BDavis

Analytical Balance ID #: OMWI-00637

Audit Weight ID #/Mass: OMWI-00283A / 200 mg

ID #	Date: 12/12/17 Time: 3:00 RH %: 7.4 T (°F): 72.6 Audit: 500.1	Date: 12/14/17 Time: 1045 RH %: 8.1 T (°F): 73.6 Audit: 200.0	Date: 12/18/17 Time: 10:02 RH %: 8.0 T (°F): 72.2 Audit: 200.0	Date: 12-20-17 Time: 1025 RH %: 9.2 T (°F): 74.6 Audit: 200.0	Date Used	Project Number	Run No.
D350	111.3	111.2			12/20/17	0135WS038E	1
D351	111.4	111.4					
D352	111.1	111.1					
D353	111.3	111.0	111.2				
D354	111.2	111.0					
D355	111.4	111.2			12/21/17	0135WS038E	2
D356	110.7	110.8					
D357	111.4	111.2					
D358	110.6	110.6					
D359	111.3	111.1					
D360	110.8	111.1	111.2		12/21/17	0135WS038E	3
D361	110.3	110.6	110.8				
D362	110.5	110.6					
D363	110.7	110.9					
D364	111.0	111.0					
D365	111.5	111.5			12/22/17	0135WS038E	4
D366	111.0	111.0					
D367	111.3	111.3					
D368	111.1	110.7	111.1	110.9			
D369	111.3	111.3					
D370	110.2	110.2			1/2/18	1352WS038E	5
D371	111.7	111.3	111.9	111.7			
	Initials:	Initials:	Initials:	Initials:			

208

Final Technician Signature: _____ Date: 1/10/18

Control No. P-SFDP-0001.xls, Effective date: 9/9/2015

Evaluator signature: _____ 1/22/2018

Calibrations

Methods EPA 28R, ASTM E2515, ASTM E2780

ID #	Lab Name/Purpose	Log Name	Attachment Type
1	Calibrator Dry Gas Meter	Rockwell Int'l Standard Test Meter	Calibration Certificate
637	Scale-Analytical Balance	Mettler Analytical Balance	Calibration Certificate
353	Scale	ELEC-weighing Scale MTW-150K	Calibration Log
283A	Audit Weights	21-Piece weight set	Calibration Certificate
132	10 lb Weight	Weight Standard, 10 lb.	Calibration Certificate
185	Platform Scale	Weigh-Tronix Platform Scale	Calibration Certificate
209	Barometer	Barometer – Princo	Manual Cover
296-T58	Tape Measure	Stanley Tape Measure	Calibration Log
335	Sample Box / Dry Gas Meter	Apex Automated Emissions Sampling Box	Calibration Log
336	Sample Box / Dry Gas Meter	Apex Automated Emissions Sampling Box	Calibration Log
340	Wood Moisture Meter	Moisture Meter - Delmhorst	See Test Run Notes
592	Thermohygrometer	Omega Digital Thermohygrometer	Calibration Log
410	Microtector	Dwyer Microtector	Calibration Certificate
594	Combustion Gas Analyzer	Infrared Gas Analyzer	Manual, See Test Run Notes
567	Stopwatch	Robotic Stopwatch SC-606W	Calibration Log
431	Moisture Meter Calibrator	Delmhorst Moisture Content Calibrator	Calibration Log
265	Vaneometer	Dwyer Vaneometer	Manual



CERTIFICATE OF CALIBRATION

CUSTOMER:	**OMNI TEST LABS INC.** PORTLAND OR	**CALIBRATION DATE:**	10/30/17
PO NUMBER:	170154	**CALIBRATION DUE:**	10/30/18
INST. MANUFACTURER:	ROCKWELL	**PROCEDURE:**	NAVAIR 17-20MG-02
INST. DESCRIPTION:	P.D. METER	**CALIBRATION FLUID:**	AIR @ 14.7 PSIA 70 F
MODEL NUMBER:	S-275	**STANDARD(S) USED:**	A4, A24 DUE 04-2020
SERIAL NUMBER:	684390L	**NIST TRACE #' S:**	1446135470, 1453296155
RATED UNCERTAINTY:	+/- .5 % RD.	**AMBIENT CONDITIONS:**	761 mm HGA 48 % RH 72 F
UNCERTAINTY GIVEN:	TOTAL measurement uncertainty: +/- .190 % RD. K=2	**CERTIFICATE FILE #:**	426663.17

NOTES: AS RECEIVED/ AS LEFT WITHIN SPECS. REFERENCE CONDITIONS ARE: 760 mm HGA 70 F **OMNI-00001**

TEST POINT NUMBER	UUT INDICATED SCFH	DM.STD. ACTUAL SCFH	CORRECTION FACTOR	K FACTOR
1	0.7314	0.73	0.99805	60.117
2	10.0745	10.05	0.99757	60.146
3	53.2919	53.14	0.99715	60.171
4	100.2740	100.02	0.99747	60.152
5	136.1637	135.88	0.99792	60.125
6	176.4641	176.07	0.99777	60.134
7	215.6504	215.14	0.99763	60.142
8	250.4925	250.05	0.99823	60.106
		AVERAGE (Y)=	0.99772292	

All instruments used in the performance of the shown calibration have traceability to the National Institute of Standards and Technology (NIST). The uncertainty ratio between the calibration standards (DM.STD.) used and the unit under test (UUT) is a minimum of 4:1, unless otherwise noted. Calibration has been performed per the shown procedure number, in accordance with ISO 10012:2003, ISO 17025:2005, ANSI/NCSL-Z-540.3, and/or MIL-STD-45662A. Test methods: API2530-92 & ASME MFC-3M-1989.

Dick Munns Company • 11133 Winners Circle • Los Alamitos, CA 90720
Phone (714) 827-1215 • Fax (714) 827-0823

This Calibration Certificate shall not be reproduced except in full, without approval by DICK MUNNS COMPANY. The data shown applies only to the instrument being calibrated and under the stated conditions of calibration.

Date: 10/30/2017

Approved By:

Calibration Technician:

Certificate of Calibration

Certificate Number: **655889**

JJ Calibrations, Inc.
7007 SE Lake Rd
Portland, OR 97267-2105
Phone 503.786.3005
FAX 503.786.2994

Omni-Test Laboratories
13327 NE Airport Way
Portland, OR 97230

OnSite

0723.01
Calibration

PO: **170142**
Order Date: **08/07/2017**
Authorized By: **N/A**

Property #: **OMNI-00637**
User: **N/A**
Department: **N/A**
Make: **Mettler Toledo**
Model: **MS104TS/00**
Serial #: **B729400181**
Description: **Scale, Analytical, 120g**
Procedure: **DCN 500887**
Accuracy: **±0.0005g**

Calibrated on: **08/07/2017**
*Recommended Due: **02/07/2018**
Environment: **22 °C 45 % RH**
* As Received: **Within Tolerance**
* As Returned: **Within Tolerance**
Action Taken: **Calibrated**
Technician: **34**

Remarks: * Many factors may cause the unit to drift out of calibration before the recommended due date. Any reported error is the absolute value between the reference and the unit. Uncertainties include the effects of the unit.

Standards Used

Std ID	Manufacturer	Model	Nomenclature	Due Date	Trace ID
256A	Rice Lake	W0133K	Mass Set	10/28/2017	616126

Measurement Data

Parameter / Measurement Description	Range Unit	Reference	Min	Max	*Error	UUT	Uncertainty Accredited = ✓
Before/After							
Force							
	g	10.00000	9.9995	10.0005	0.0001	10.0001 g	5.7E-04 ✓
	g	30.00000	29.9995	30.0005	0.0001	30.0001 g	5.7E-04 ✓
	g	60.00000	59.9995	60.0005	0.0003	60.0003 g	5.7E-04 ✓
	g	90.00000	89.9995	90.0005	0.0002	90.0002 g	5.7E-04 ✓
	g	120.00000	119.9995	120.0005	0.0003	120.0003 g	5.7E-04 ✓

JJ Calibrations, Inc. certifies that this instrument has been calibrated in accordance with the JJ Calibrations Quality Assurance Manual with the stated procedure using standards that are traceable to the National Institute of Standards and Technology (NIST), or other National Measurement Institutes (NMI's), or by using natural physical constants, intrinsic standards or ratio calibration techniques. The quality system and this certificate are in compliance with ANSI/NCSL Z540-1-1994, ISO/IEC 17025-2005, ISO 10012-1, the ISO 9000 family and QS 9000. The expanded uncertainties of measurements for this calibration are based upon 95% (2 sigma) confidence limits. Unless otherwise stated, a test accuracy ratio (TAR) of 4:1, if achievable, is maintained. The results reported herein apply only to the calibration of the item described above. This report may not be reproduced, except in full, without prior written consent of JJ Calibrations, Inc.
JJ Calibrations, Inc. quality system has been assessed and accredited to ISO/IEC 17025:2005.

Reviewer

3 Issued 08/14/2017 Rev # 15

Inspector

Calibration sheet For MTW-150K S/N MKW04072 (OMNI-00353)

Calibration Interval: 12 months

Parameter	Date	Omni reference weights used	Weight	Scale readout	Compliance	
Mass in Lbs.	12-11-08	00132	10 lb	10.0 lbs	✓	
	12-11-08	00132, 255	20 lb	20.0 lbs	✓	
	12-11-08	00132, 255, 274	30 lb	30.0 lbs	✓	
	3/9/11	00132	10LBS	10LBS	X	
	3/9/11	132/255	10LBSx2	20LBS	X	
	3/9/11	132/255/274	10LBSx3	30LBS	X	
	8/10/2012	00132	10 lb	10.0 lb	✓	J. Clark
	8/10/2012	132, 255	20 lb	20.0 lb	✓	J. Clark
	8/10/2012	132, 255, 274	30 lb	30.0 lb	✓	J. Clark
	7/19/2013	00132	10 lb	10.0 lb	✓	J. Clark
	7/19/2013	132, 255	20 lb	20.0 lb	✓	J. Clark
	7/19/2013	132, 255, 274	30 lb	30.0 lb	✓	J. Clark
	7/8-9/2014	-00132	10 lb	10.0 lb	✓	J. Clark
	7/9/2014	-00132, -00255	20 lb	20.0 lb	✓	J. Clark
	7/9/2014	-00132, -00255, -00274	30 lb	30.0 lb	✓	J. Clark
	7/13/2015	-00132	10 lb	10.0 lb	✓	J. Clark
	7/13/2015	-00132, -00255	20 lb	20.0 lb	✓	
	7/13/2015	-00132, -00255, -00274	30 lb	30.0 lb	✓	
	7/26/2016	Omni-00283B	1 kg	2.2 lb	✓	B Davis
	7/26/2016	Omni-00274	10 lb	12.2 lb	✓	B Davis
	7/26/2016	Omni-00255	10 lb	22.2 lb	✓	B Davis
	8/14/17	Omni-00283B	1 kg	2.2 lbs	✓	B
	8/14/17	Omni-00274	10.0	12.2	✓	B
	8/14/17	Omni-00255	10.0	22.2	✓	B

Certificate of Calibration

Certificate Number: **543402**

JJ Calibrations, Inc.
7007 SE Lake Rd
Portland, OR 97267-2105
Phone 503.786.3005
FAX 503.786.2994

Omni-Test Laboratories
13327 NE Airport Way
Portland, OR 97230

ACCREDITED
0723.01
Calibration

PO: OTL-13-031
Order Date: 09/27/2013
Authorized By: N/A

Property #: OMNI-00283A
User: N/A
Department: N/A
Make: Troemner Inc
Model: 1mg-100g (Class F)
Serial #: 47883
Description: Mass Set, 21 Pc.
Procedure: DCN 500901
Accuracy: Class F

Calibrated on: 10/09/2013
*Recommended Due: 10/09/2018
Environment: 20 °C 41 % RH
As Received: Other - See Remarks
As Returned: Within Tolerance
Action Taken: Calibrated
Technician: 34

Remarks: * Any number of factors may cause the calibration item to drift out of calibration before the recommended interval has expired

Changed set from a Class 4 to a Class F per Jeremy Clark.
Received missing 1g weight.
Refer to attachment for measurement results.

Standards Used

Std ID	Manufacturer	Model	Nomenclature	Due Date	Trace ID
432A	Sartorius	C-44	Microbalance 5.1g	03/11/2014	517747
479A	Sartorius	MC210S	Scale, 210g	02/22/2014	517755
503A	Rice Lake	1mg-200g (Class O)	Mass Set	12/07/2013	517746
723A	Rice Lake	1mg-200g (Class O)	Mass Set	09/05/2014	540048

JJ Calibrations, Inc. certifies that this instrument has been calibrated in accordance with the JJ Calibrations Quality Assurance Manual with the stated procedure using standards that are traceable to the National Institute of Standards and Technology (NIST), or other National Measurement Institutes (NMI's), or by using natural physical constants, intrinsic standards or ratio calibration techniques. The quality system and this certificate are in compliance with ANSI/NCSL Z540-1-1994, ISO/IEC 17025-2005, ISO 10012-1, the ISO 9000 family and QS 9000. The expanded uncertainties of measurements for this calibration are based upon 95% (2 sigma) confidence limits. Unless otherwise stated, a test accuracy ratio (TAR) of 4:1, if achievable, is maintained. The results reported herein apply only to the calibration of the item described above. This report may not be reproduced, except in full, without prior written consent of JJ Calibrations, Inc.
JJ Calibrations, Inc. quality system has been assessed and accredited to ISO/IEC 17025:2005.

Reviewer

3 Issued 10/11/2013 Rev # 14

Inspector

JJ Calibrations, Inc.

Manufacturer: Troemner Inc.
Model: 1mg-100g (Class F)
Nomenclature: Mass Set, 21 Pc.
Serial: 47883

Certificate #: 543402
Date: 09Oct2013
Technician: 34
Calibration Interval: 60 Months

Parameter		Nominal	JJ Standard	UUT	UUT ± Limit	Uncertainty ±
Mass Verification						
Data in mg		1	0.996	1.048	0.100	0.0115
	dot	2	2.002	1.973	0.120	0.0115
		2	2.002	2.048	0.120	0.0115
		5	4.996	5.033	0.170	0.0115
		10	10.000	10.053	0.210	0.0115
	dot	20	19.999	19.966	0.260	0.0115
		20	19.999	20.069	0.260	0.0115
		50	49.998	50.018	0.350	0.0115
		100	99.998	100.144	0.430	0.0115
	dot	200	199.999	200.045	0.540	0.0115
		200	199.999	199.967	0.540	0.0115
		500	499.996	500.334	0.720	0.0115
Data in grams		1		Missing		
	dot	2	2.000000	1.999888	0.0011	0.0000394
		2	2.000000	2.000335	0.0011	0.0000394
		5	5.000002	4.999996	0.0015	0.0000395
		10	9.99998	9.99984	0.0020	0.0000580
	dot	20	19.99999	20.00100	0.0040	0.0000855
		20	19.99999	20.00079	0.0040	0.0000855
		50	49.99997	49.99949	0.0100	0.0001390
		100	99.99999	99.99802	0.0200	0.0002900

Supplement Data Sheet
Bold Italics indicates Out of Tolerance Value.

SCALE WEIGHT CALIBRATION DATA SHEET

Weight to be calibrated: 10 lb

ID Number: 132

Standard Calibration Weight: 10 lb

ID Number: 256

Scale Used: MTW-150K

ID Number: 353

Date: 2/19/13 By: A. Kravitz

Standard Weight (A) (Lb.)	Weight Verified (B) (Lb.)	Difference (A - B)	% Error
10.0	10.0	0.0	Ø

*Acceptable tolerance is 1%.

This calibration is traceable to NIST using calibrated standard weights.

Technician signature: Date: 2/19/13

Established 1974

QUALITY CONTROL SERVICES

LABORATORY EQUIPMENT • SALES • SERVICE • CALIBRATION • REPAIRS
2340 SE 11TH Ave. Portland, Oregon 97214 • Box 14831 Portland, Oregon 97293
(503) 236-2712 • FAX (503) 235-2535 • www.qc-services.com

ACCREDITED
Calibration Services
Certificate Number: 1550.01
Laboratory code: 115953

OMNI-Test Laboratories, Inc.
13327 NE Airport Way
Portland, OR 97230

Report Number: OMNE0321676171004

A2LA ACCREDITED
CERTIFICATE OF CALIBRATION WITH DATA

INSTRUMENT INFORMATION

Item	Make	Model	Serial Number	Customer ID	Location
Scale	Weigh-Tronix	WI-127 1000x0.1lb	21676	185	Lab
Units	**Readability**	**SOP**	**Cal Date**	**Last Cal Date**	**Cal Due Date**
lbs	0.1	QC033	10/4/17	10/11/16	10/2018

FUNCTIONAL CHECKS

SHIFT TEST	LINEARITY	REPEATABILITY	ENVIRONMENTAL CONDITIONS
Test Wt: 500 Tol: 0.5	Test Wt: HB44 Tol: HB44	Test Wt: 200 Tol: 0.2	☐ Good ☑ Fair ☐ Poor
As-Found: Pass:☑ Fail:☐	As-Found: Pass:☑ Fail:☐	As-Found: Pass:☑ Fail:☐	Temperature: 21.0°C
As-Left: Pass:☑ Fail:☐	As-Left: Pass:☑ Fail:☐	As-Left: Pass:☑ Fail:☐	

CALIBRATION DATA

Standard	As-Found	As-Left	Expanded Uncertainty
1000	1000.0	1000.0	0.12
700	700.0	700.0	0.12
500	500.0	500.0	0.08
200	200.0	200.0	0.08
100	100.0	100.0	0.05
50	50.0	50.0	0.05

CALIBRATION STANDARDS

Item	Make	Model	Serial Number	Cal Date	Cal Due Date	NIST ID
Avoirdupois Cast W	Rice Lake	25 and 50lb	PWO990-CA	11/4/15	11/2017	20152112

Permanent Information Concerning this Equipment:

Comments/Information Concerning this Calibration

Report prepared/reviewed by: _____ **Date:** 10.4.17 **Technician:** D.Oudeans
Signature: _____

THIS CERTIFICATE SHALL NOT BE REPRODUCED, EXCEPT IN FULL, WITHOUT THE APPROVAL OF QUALITY CONTROL SERVICES, INC.

The uncertainty is calculated according to the ISO Guide to the Expression of Uncertainty in Measurement and includes the uncertainty of standards used combined with the observed standard deviation of the unit under test. The uncertainty is expanded with a k factor of 2 for an approximate 95% level of confidence. Instruments listed above were calibrated using standards traceable to the National Institute of Standards and Technology (NIST). Calibration data reflect results at the time and location of calibration. Calibration data should be reviewed to insure that the instrument is performing to its required accuracy.

Quality Control Services
Report of Service and Calibration

2340 S.E. 11TH AVENUE
PORTLAND, OR 97214
PHONE 503-236-2712

53843

Sold To OMNI-Test Laboratories, Inc. PT ID: OMNE03 P.O. No: 170148
Address PO Box 301367 Contact: Bruce Davis
City Portland, OR 97294 Phone: 503-643-3788
Ship To 13327 NE Airport Way Portland, OR 97230 Email: bdavis@omni-test.com

No	Item	Make	Model	Serial Number	Location	Contact	Rate	Date Svc'd 2017	Tech	Cust ID
1	Scale	Weigh-Tronix	WI-125x5000x0	53719	Lab	Ken Morgan	$150.00	104	KM	356
2	Scale	Weigh-Tronix	WI-127 1000x0.	21676	Lab	Ken Morgan	$150.00	104	KM	185

Service / Calibration Documentation Requirements
- ☐ Certificate of Calibration
- ☐ Calibration with Data
- ☒ A2LA Certificate

Received By: _____ Date: _____

Comments: Truck charge $95.00
$125.00 Balance Letter



453
National
Weather
Service
Type

OMNI 00209

Instruction Booklet

for use with

PRINCO

Fortin type mercurial

Barometers

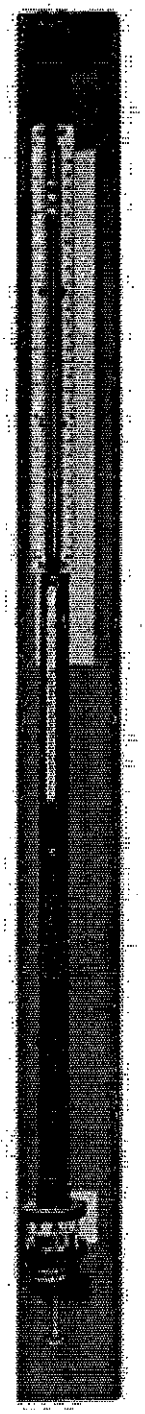

469
NOVA™
Economy
Model

Manufactured by

PRINCO INSTRUMENTS, INC.
1020 Industrial Blvd.
Southampton, Pa. 18966-4095
U.S.A.

Phone: 215 355-1500
Fax: 215 355-7766

OMNI Environmental Services, Inc.
OMNI-Test Laboratories, Inc.

Tape Measure Calibration Log

Place the calibrated 12" ruler under the tape measure and verify that each ½" (i.e. 1.5", 2", 2.5") between 0 and 36" is within 1/8".

Calibrated using OMNI-00281

Tape Measure Number	Description	Cal Dates				Technician Initials			
OMNI-00296-T55	Dewalt 16' Tape Measure	12/12/16				BD			
OMNI-00296-T56	Dewalt 25' Tape Measure	12/12/16				BD			
OMNI-00296-T59	Dewalt 25' Tape Measures	12/12/16				BD			
OMNI-00296-T58	Dewalt 25' Tape measure	3/9/17				BD			

219

Thermal Metering System Calibration
Y Factor

Manufacturer:	APEX
Model:	XC-60-EP
Serial Number:	606001
OMNI Tracking No.:	OMNI-00335
Calibrated Orifice:	☐Yes

Previous Calibration Comparision

Date	1/3/2017	Acceptable Deviation (5%)	Deviation
y Factor	0.984	0.0492	0.003
Acceptance	Acceptable		

Current Calibration

Acceptable y Deviation	0.020
Maximum y Deviation	0.005
Acceptable dH@ Deviation	N/A
Maximum dH@ Deviation	N/A
Acceptance	Acceptable

Average Gas Meter y Factor	Orifice Meter dH@
0.981	N/A

Calibration Date:	07/18/17	
Calibrated by:	B. Davis	
Calibration Frequency:	Six months	
Next Calibration Due:	1/18/2018	
Instrument Range:	1.000	cfm
Standard Temp.:	68	oF
Standard Press.:	29.92	"Hg
Barometric Press., Pb:	30.08	"Hg
Signature/Date:		7/18/2017

7/19/2017

Reference Standard *			
Standard Calibrator	Model	Standard Test Meter	
	S/N	OMNI-00001	
	Calib. Date	27-Oct-16	
	Calib. Value	0.9823	y factor (ref)

Calibration Parameters	Run 1	Run 2	Run 3
Reference Meter Pressure ("H2O), Pr	0.00	0.00	0.00
DGM Pressure ("H2O), Pd	2.25	1.30	0.75
Initial Reference Meter	749.4	756.7	762.5
Final Reference Meter	756.6	762.4	770.3
Initial DGM	0	0	0
Final DGM	7.245	5.798	7.977
Temp. Ref. Meter (°F), Tr	71.5	72.7	73.9
Temperature DGM (°F), Td	80.0	82.0	84.0
Time (min)	34.0	35.0	63.5
Net Volume Ref. Meter, Vr	7.200	5.700	7.800
Net Volume DGM, Vd	7.245	5.798	7.977
Gas Meter y Factor =	**0.986**	**0.979**	**0.977**
Gas Meter y Factor Deviation (from avg.)	0.005	0.001	0.004
Orifice dH@	**N/A**	**N/A**	**N/A**
Orifice dH@ Deviation (from avg.)	N/A	N/A	N/A

where:

1. Deviation = |Average value for all runs - current run value|

** 2. y = [Vr x (y factor (ref)) x (Pb + (Pr/ 13.6)) x (Td + 460)]/ [Vd x (Pb + (Pd / 13.6)) x (Tr + 460)]

** 3. dH@ = 0.0317 x Pd / (Pb (Td + 460)) x [(Tr + 460) x time) / Vr]^2

* Reference calibration is traceable to NIST through NIST Test # 40674, Kimble ASTM E1272, or NIST traceable laboratory

** Equations come from EPA Method 5

The uncertainty of measurement is ±0.14 ft^3/min. This is based on the reference standard having a TAR (Test Accuracy Ratio) of at least 4:1.

DIFFERENTIAL PRESSURE GAUGE CALIBRATION DATA SHEET

Instrument to be calibrated: Pressure Transducer

Maximum Range: 0-2" W.C. ID Number: OMNI-00335

Calibration Instrument: Digital Manometer ID Number: OMNI-00633

Date: 7/18/17 By: B. Davis

This form is to be used only in conjunction with Standard Procedure C-SPC.

Range of Calibration Point ("WC)	Digital Manometer Input ("WC)	Pressure Gauge Response ("WC)	Difference (Input - Response)	% Error of Full Span*
0-20% Max. Range 0 – 0.4	0.034 0.203	0.030 0.203	0.000	0.2 Ø
20-40% Max. Range 0.4 – 0.8	0.563	0.574	0.011	0.55
40-60% Max. Range 0.8 – 1.2	1.001	1.023	0.022	1.10
60-80% Max. Range 1.2 – 1.6	1.464 ~~0.147~~	1.503	0.039	1.95
80-100% Max. Range 1.6 – 2.0	1.940	1.994	0.054	2.7

*Acceptable tolerance is 4%.

The uncertainty of measurement is ±0.4" WC. This is based on the reference standard having a TAR (Test Accuracy Ratio) of at least 4:1.

Technician signature: _____ Date: 7/18/17

Reviewed by: _____ Date: 7/19/2017

Temperature Calibration
EPA Method 28R, ASTM 2515

Booth:	Temperature Monitor Type:	Equipment Number:
E1	National Instruments Logger	00335, 00336

Reference Meter Equipment Number: 00373	Calibration Due Date: 8/02/17

Calibration Performed By:	Date:	Ambient Temperature:	Barometric Pressure:
B. Davis	7/18/17	68	30.08

Input Temperature (F)	Ambient	Meter A	Meter B	Filter A	Filter B	Tunnel	FB Interior
0	1	1	1	1	1	0	0
100	101	101	101	101	100	100	100
300	301	300	300	300	300	300	300
500	501	500	500	500	500	500	500
700	701	700	700	700	700	700	700
1000	1001	1000	1000	1000	1000	1000	1000

Input (F)	FB Top	FB Bottom	FB Back	FB Left	FB Right	Imp A	Imp B	Cat	Stack
0	0	0	0	0	0	1	1	1	0
100	100	100	100	100	100	101	101	100	100
300	300	300	300	300	300	300	300	300	300
500	500	500	500	500	500	500	500	500	500
700	700	700	700	700	700	700	700	700	700
1000	1000	1000	1000	1000	1000	1000	1000	1000	1000
1500								1500	
2000								2000	

Technician signature: _____ Date: 7/18/17

Reviewed By: _____ Date: 7/19/2017

Thermal Metering System Calibration
Y Factor

Manufacturer:	APEX
Model:	XC-60-EP
Serial Number:	606002
OMNI Tracking No.:	OMNI-00336
Calibrated Orifice:	☐Yes

Previous Calibration Comparision

Date	1/3/2017	Acceptable Deviation (5%)	Deviation
y Factor	0.99	0.0495	0.006
Acceptance	Acceptable		

Current Calibration

Acceptable y Deviation	0.020
Maximum y Deviation	0.002
Acceptable dH@ Deviation	N/A
Maximum dH@ Deviation	N/A
Acceptance	Acceptable

Average Gas Meter y Factor	Orifice Meter dH@
0.984	N/A

Calibration Date:	07/18/17	
Calibrated by:	B. Davis	
Calibration Frequency:	Six months	
Next Calibration Due:	1/18/2018	
Instrument Range:	1.000	cfm
Standard Temp.:	68	oF
Standard Press.:	29.92	"Hg
Barometric Press., Pb:	30.08	"Hg
Signature/Date:	7/18/17	
	7/19/2017	

Reference Standard *			
Standard Calibrator	Model	Standard Test Meter	
	S/N	OMNI-00001	
	Calib. Date	27-Oct-16	
	Calib. Value	0.9823	y factor (ref)

Calibration Parameters	Run 1	Run 2	Run 3
Reference Meter Pressure ("H2O), Pr	0.00	0.00	0.00
DGM Pressure ("H2O), Pd	1.95	1.20	0.80
Initial Reference Meter	771.3	777.8	785.1
Final Reference Meter	777.7	785	790.6
Initial DGM	0	0	0
Final DGM	6.459	7.298	5.583
Temp. Ref. Meter (°F), Tr	75.1	76.1	77.8
Temperature DGM (°F), Td	85.0	85.0	88.0
Time (min)	30.0	41.8	40.0
Net Volume Ref. Meter, Vr	6.400	7.200	5.500
Net Volume DGM, Vd	6.459	7.298	5.583
Gas Meter y Factor =	**0.987**	**0.982**	**0.984**
Gas Meter y Factor Deviation (from avg.)	0.002	0.002	0.000
Orifice dH@	**N/A**	**N/A**	**N/A**
Orifice dH@ Deviation (from avg.)	N/A	N/A	N/A

where:

1. Deviation = |Average value for all runs - current run value|

** 2. y = [Vr x (y factor (ref)) x (Pb + (Pr/ 13.6)) x (Td + 460)]/ [Vd x (Pb + (Pd / 13.6)) x (Tr + 460)]

** 3. dH@ = 0.0317 x Pd / (Pb (Td + 460)) x [(Tr + 460) x time) / Vr]^2

* Reference calibration is traceable to NIST through NIST Test # 40674, Kimble ASTM E1272, or NIST traceable laboratory

** Equations come from EPA Method 5

The uncertainty of measurement is ±0.14 ft^3/min. This is based on the reference standard having a TAR (Test Accuracy Ratio) of at least 4:1.

DIFFERENTIAL PRESSURE GAUGE CALIBRATION DATA SHEET

Instrument to be calibrated: Pressure Transducer

Maximum Range: 0-2" W.C. ID Number: OMNI-00336

Calibration Instrument: Digital Manometer ID Number: OMNI-00633

Date: 7/18/17 By: B. Davis

This form is to be used only in conjunction with Standard Procedure C-SPC.

Range of Calibration Point ("WC)	Digital Manometer Input ("WC)	Pressure Gauge Response ("WC)	Difference (Input - Response)	% Error of Full Span*
0-20% Max. Range 0 – 0.4	0.044 0.260	0.039 0.256	0.005 0.004	0.25 0.20
20-40% Max. Range 0.4 – 0.8	0.693	0.696	0.003	0.15
40-60% Max. Range 0.8 – 1.2	1.021	1.029	0.008	0.40
60-80% Max. Range 1.2 – 1.6	1.529	1.540	0.011	0.55
80-100% Max. Range 1.6 – 2.0	1.917	1.940	0.023	1.15

*Acceptable tolerance is 4%.

The uncertainty of measurement is ±0.4" WC. This is based on the reference standard having a TAR (Test Accuracy Ratio) of at least 4:1.

Technician signature: _____ Date: 7/18/17

Reviewed by: _____ Date: 7/19/2017

Temperature Calibration
EPA Method 28R, ASTM 2515

Booth:	Temperature Monitor Type:	Equipment Number:
E1	National Instruments Logger	00335, 00336

Reference Meter Equipment Number: 00373	Calibration Due Date: 8/02/17

Calibration Performed By:	Date:	Ambient Temperature:	Barometric Pressure:
B. Davis	7/18/17	68	30.08

Input Temperature (F)	Ambient	Meter A	Meter B	Filter A	Filter B	Tunnel	FB Interior
0	1	1	1	1	1	0	0
100	101	101	101	101	100	100	100
300	301	300	300	300	300	300	300
500	501	500	500	500	500	500	500
700	701	700	700	700	700	700	700
1000	1001	1000	1000	1000	1000	1000	1000

Input (F)	FB Top	FB Bottom	FB Back	FB Left	FB Right	Imp A	Imp B	Cat	Stack
0	0	0	0	0	0	1	1	1	0
100	100	100	100	100	100	101	101	100	100
300	300	300	300	300	300	300	300	300	300
500	500	500	500	500	500	500	500	500	500
700	700	700	700	700	700	700	700	700	700
1000	1000	1000	1000	1000	1000	1000	1000	1000	1000
1500								1500	
2000								2000	

Technician signature: _____ Date: 7/18/17

Reviewed By: _____ Date: 7/19/2017

J-2000

owners manual



VWR Temperature Hygrometer Calibration Procedure and Data Sheet

Frequency: Every Two Years

Step 1: Locate NIST traceable standard.

Step 2: Place unit to be calibrated, tracking No. OMNI- 00592 , inside OMNI desiccate box on the same shelf with the NIST traceable standard.

Step 3: After a period of not less than four hours record the temperature and humidity of both units in the spaces provide below.

Step 4: If the unit to be calibrated matches the NIST standard within ± 4%, it is acceptable. If not, the unit needs to be sent to a repair company or replaced.

Verification Data:

Date: 1/8/2018 Technician: B Davis

Time in desiccate: 0910 Recording time: 1335

NIST Standard Temperature: 28.3 °F NIST Standard Humidity: 74.5

Test Unit Temperature Reading: 25.4 °F Test Unit Humidity Reading: 74.3

Test unit OMNI- 00592 is X or was not __ within acceptable limits.

Technician Signature: B

Comments: Full scale of OMNI-00592 is 90% RH, with a difference of 2.9 this gives a error percentage of 3.22 %. This value is within the allowable 4%.

VWR Temperature Hygrometer Calibration Procedure and Data Sheet

Frequency: Every Two Years

Step 1: Locate NIST traceable standard.

Step 2: Place unit to be calibrated, tracking No. OMNI- 00592, inside OMNI desiccate box on the same shelf with the NIST traceable standard.

Step 3: After a period of not less than four hours record the temperature and humidity of both units in the spaces provide below.

Step 4: If the unit to be calibrated matches the NIST standard within ± 4%, it is acceptable. If not, the unit needs to be sent to a repair company or replaced.

Verification Data:

Date: 1/5/17 Technician: B Davis

Time in desiccate: 0900 Recording time: 0845 1/6/17

NIST Standard Temperature: 67.5 °F NIST Standard Humidity: 9.5

Test Unit Temperature Reading: 66.9 °F Test Unit Humidity Reading: 6.1

Test unit OMNI- 00592 is X or was not ___ within acceptable limits.

Technician Signature:

Comments: Humidity Results of 00592 are within ± 4% of Reference meter

Certificate of Calibration

Certificate Number: **659360**

JJ Calibrations, Inc.
7007 SE Lake Rd
Portland, OR 97267-2105
Phone 503.786.3005
FAX 503.786.2994

Omni-Test Laboratories
13327 NE Airport Way
Portland, OR 97230

ACCREDITED
0723.01
Calibration

PO: **170149**
Order Date: **09/22/2017**
Authorized By: **N/A**

Property #: **OMNI-00410**
User: **N/A**
Department: **N/A**
Make: **Dwyer**
Model: **1430**
Serial #: **OMNI-00410**
Description: **Microtector**
Procedure: **SEND TO VENDOR**
Accuracy: **±0.00025" WC**

Calibrated on: **10/11/2017**
*Recommended Due: **10/11/2018**
Environment: **19 °C 52 % RH**
* As Received: **Limited**
* As Returned: **Limited**
Action Taken: **Calibrated**
Technician: **34**

Remarks: * Many factors may cause the unit to drift out of calibration before the recommended due date. Any reported error is the absolute value between the reference and the unit. Uncertainties include the effects of the unit.

Limited Calibration (est.2016) - Calibrated micrometer head only.

Standards Used

Std ID	Manufacturer	Model	Nomenclature	Due Date	Trace ID
541A	Select	E8FED2	8 Piece Gage Block Set	12/14/2017	635720
103A	Brown & Sharpe	598-81-14	Gage Block Set, 81 pc.	03/16/2019	643452
368A	Rutland	2225-7081	81 Piece Gage Block Set	06/01/2018	649394

Measurement Data

Parameter / Measurement Description	Range	Unit	Reference	Min	Max	%Error	UUT	Uncertainty
Before/After								Accredited = ✓
Length								
		Inch	0.1300	0.129	0.131	0.000	0.130 Inch	1.1E-03 ✓
		Inch	0.3850	0.384	0.386	0.000	0.385 Inch	1.1E-03 ✓
		Inch	0.6150	0.614	0.616	0.000	0.615 Inch	1.1E-03 ✓
		Inch	0.8700	0.869	0.871	0.000	0.870 Inch	1.1E-03 ✓
		Inch	1.0000	0.999	1.001	0.000	1.000 Inch	1.1E-03 ✓

JJ Calibrations, Inc. certifies that this instrument has been calibrated in accordance with the JJ Calibrations Quality Assurance Manual with the stated procedure using standards that are traceable to the National Institute of Standards and Technology (NIST), or other National Measurement Institutes (NMI's), or by using natural physical constants, intrinsic standards or ratio calibration techniques. The quality system and this certificate are in compliance with ANSI/NCSL Z540-1-1994, ISO/IEC 17025-2005, ISO 10012-1, the ISO 9000 family and QS 9000. The expanded uncertainties of measurements for this calibration are based upon 95% (2 sigma) confidence limits. Unless otherwise stated, a test accuracy ratio (TAR) of 4:1, if achievable, is maintained. The results reported herein apply only to the calibration of the item described above. This report may not be reproduced, except in full, without prior written consent of JJ Calibrations, Inc.
JJ Calibrations, Inc. quality system has been assessed and accredited to ISO/IEC 17025:2005.

Reviewer

3 Issued 10/13/2017 Rev # 15

Inspector

ZRE NDIR/O_2



USER'S MANUAL

1312 West Grove Avenue
Orange, CA 92865-4134
Phone: 714-974-5560 Fax: 714-921-2531
www.gasanalyzers.com

OMNI Environmental, Inc.
OMNI-Test Laboratories, Inc.

NIST Stopwatch Calibration, Time Proficiency Testing Procedure and Data Sheet

Date: 8/7/17 User/Technician: N. Sodergren ☑ Pass ☐ Fail

NIST traceable stopwatch *OMNI* tracking number: 00565 Last Cal: 06/27/2017

Stopwatch to be tested for time proficiency *OMNI* tracking number: 00567

1. Start the NIST traceable stopwatch: at a predetermined time (i.e. 1.00 minutes), the technician shall start the watch being tested. When 15.00 seconds have passed (i.e. the NIST traceable stopwatch reads 1 minute, 15 seconds), the technician shall stop the watch being tested. Record the target time interval (i.e. 15.00 seconds). Repeat this step twice and record the data.

2. Repeat step #1 for each of the following target time intervals: 30.00 seconds, 10.00 minutes, and 30 minutes.

3. If the delta between the target time and measured time is less than 5% of the target time interval or 2.00 seconds (whichever is less), then the technician has demonstrated proficiency with the specific instrument utilized in the proficiency test. The proficiency is valid for a period of 12 months.

4. Archive the proficiency test data and information, including the effective date and expiration date of the proficiency, in the equipment record for the instrument involved.

Target time: 15.00 seconds	#1 Measured time:	15.05	#2 Measured time:	14.96	#3 Measured time:	15.00
Target time: 30.00 seconds	#1 Measured time:	30.19	#2 Measured time:	30.18	#3 Measured time:	29.84
Target time: 45.00 seconds	#1 Measured time:	44.98	#2 Measured time:	44.79	#3 Measured time:	44.89
Target time: 60.00 seconds	#1 Measured time:	59.97	#2 Measured time:	59.94	#3 Measured time:	59.97
Target time: 10.00 minutes	#1 Measured time:	9'59"78	#2 Measured time:	9'59"90	#3 Measured time:	10'00"15
Target time: 30.00 minutes	#1 Measured time:	~~9'59"90~~ 30'00"23	#2 Measured time:	30'00"06	#3 Measured time:	29'59"97

The uncertainty of measurement is ±1 sec. This is based on the reference standard having a TAR (Test Accuracy Ratio) of at least 4:1.

This calibration procedure is confirmed by the manufacturer as a proper method for evaluating the accuracy of timers.

Technician Signature: _____ Date: 8/7/17

Reviewed by: _____ Date: 8/7/17

WOOD MOISTURE CONTENT CALIBRATION WORKSHEET

Moisture Content Standard OMNI ID #: 00431

Reference Moisture Content Standard: **OMNI # 00430**

Date	Temp.	Barometric Pressure	Fixed Moisture %	Fixed Moisture %	Observed Moisture %		Initials
11/14/16	68° F	30.10 in Hg	22%	12%	22%	12%	AG
5/10/17	70°F	30.14 in Hg	22%	12%	22%	12%	ASC
11/17/17	70°F	30.23 in Hg	22%	12%	22%	12%	MS
			22%	12%			
			22%	12%			
			22%	12%			
			22%	12%			
			22%	12%			
			22%	12%			
			22%	12%			
			22%	12%			
			22%	12%			
			22%	12%			
			22%	12%			
			22%	12%			
			22%	12%			
			22%	12%			
			22%	12%			
			22%	12%			

Notes: _____

Technician signature: _____ Date: 11/15/16

CALIBRATION RECORD

VANEOMETER AIR VELOCITY METER OMNI #00265

CALIBRATIONS SERVICE RECORD			
DATE	**BY**	**RESULTS**	**DATE OF NEXT CALIBRATION**
10/5/10	SW	INSTALLED NEW VANE FR. FACTORY	4/5/11
4/6/11	SW	" " " " "	10/6/11
7/21/15	TC	Installed new vane from manufacturer	1/21/16
3/4/16	DR	Installed new VANE from MANUfacturer	9/4/16
8/30/16	DR	Installed new VANE from MANUfacturer	~~3/[illegible]/16~~ 3/7/17
3/9/17	DR	Installed new VANE from MANUfacturer	9/9/17
9/13/17	DR	Installed new VANE from MANUfacturer	3/13/18

Example Calculations

Equations and Sample Calculations – ASTM E2780 & E2515

Manufacturer:	Hearth & Home
Model:	Intrepid IV
Run:	1
Category:	2

Equations used to calculate the parameters listed below are described in this appendix. Sample calculations are provided for each equation. The raw data and printout results from a sample run are also provided for comparison to the sample calculations.

M_{Sdb} – Weight of test fuel spacers, dry basis, kg

M_{Cdb}– Weight of test fuel crib, excluding nails and spacers, dry basis, kg

D_{Cdb} - Density of fuel crib, excluding spacers and nails, dry basis, lbs/ft^3

M_{FTAdb} - Total weight of fuel crib excluding nails, dry basis, kg

BR – Dry burn rate, kg/hr

V_s – Average gas velocity in the dilution tunnel, ft/sec

Q_{sd} – Average gas flow rate in dilution tunnel, dscf/hr

$V_{m(std)}$ – Volume of gas sampled, corrected to dry standard conditions, dscf

m_n – Total particulate matter collected, mg

C_s - Concentration of particulate matter in tunnel gas, dry basis, corrected to standard conditions, g/dscf

E_T – Total particulate emissions, g

PR - Proportional rate variation

PM_R – Particulate emissions for test run, g/hr

PM_F – Particulate emission factor for test run, g/dry kg of fuel burned

M_{Sdb} – Weight of test fuel spacers, dry basis, kg
ASTM E2780 equation (1)

$$M_{Sdb} = (M_{Swb})(100/(100 + FM_S))$$

Where,

FM_S = average fuel moisture of test fuel spacers, % dry basis

M_{Swb} = weight of test fuel spacers, wet basis, kg

Sample Calculation:

FM_S = 17.5 %

M_{Swb} = 2.0 lbs

0.4536 = Conversion factor from lbs to kg

M_{Sdb} = [(2.0 x 0.4536) (100/(100 + 17.5)

M_{Sdb} = **0.77** kg

M_{Cdb}– Weight of test fuel crib, excluding nails and spacers, dry basis, kg
ASTM E2780 equation (2)

$$M_{Cdb} = \Sigma[(M_{CPnwb})(100/(100 + FM_{CPn}))]$$

Where,

M_{CPnwb} = weight of each test fuel piece n in fuel crib, excluding nails and spacers, wet basis, kg

FM_{CPn} = Average fuel moisture of test fuel n in fuel crib, % dry basis

Sample Calculation (test fuel piece 1):

MC_{Pnwb} = 1.4

FM_{CPn} = 22.4

= 1.4 (100/(100+ 22.4)

= 1.1 lbs

Total crib weight, excluding spacer 5.30 lbs

M_{Cdb} = **2.40** kg

D_{Cdb} - Density of fuel crib, excluding spacers and nails, dry basis, lbs/ft^3
ASTM E2780 equation (3)

$$D_{Cdb} = M_{Cdb}/V_C$$

Where,

V_C = Volume of fuel crib, ft^3

Sample calculation:

V_C = 354 in^3

1728 = conversion from in^3 to ft^3

D_{Cdb} = 5.30 / 354 * 1728

= **25.8** lbs/ft^3

M_{FTAdb} - Total weight of fuel crib excluding nails, dry basis, kg
ASTM E2780 equation (4)

$$M_{FTAdb} = M_{Sdb} + M_{Cdb}$$

Sample calculation:

$$M_{FTAdb} = 0.77 + 2.40$$

$$= \mathbf{3.17} \text{ kg}$$

BR – dry burn rate, kg/hr
ASTM E2780 equation (5)

$$BR = \frac{60\ M_{FTAdb}}{\theta}$$

Where,

θ = Total length of test run, min

Sample Calculation:

M_{Bdb} = 3.17 kg

θ = 200 min

$$BR = \frac{60 \times 3.17}{200}$$

BR = **0.95** kg/hr

V_s – Average gas velocity in the dilution tunnel, ft/sec
ASTM E2515 equations (9)

$$v_s = F_P \times k_p \times C_p \times (\sqrt{\Delta P})_{avg} \times \sqrt{\frac{T_{s(avg)}}{P_s \times M_s}}$$

Where:

F_p = Adjustment factor for center of tunnel pitot tube placement, $Fp = \frac{V_{strav}}{V_{scent}}$, ASTM E2515 Equation (1)

v_{scent} = Dilution tunnel velocity calculated after the multi-point pitot traverse at the center, ft/sec

v_{strav} = Dilution tunnel velocity calculated after the multi-point pitot traverse, ft/sec

k_p = Pitot tube constant, 85.49

C_p = Pitot tube coefficient: 0.99, unitless

ΔP* = Velocity pressure in the dilution tunnel, in H_2O

T_s = Absolute average gas temperature in the dilution tunnel, °R; (°R = °F + 460)

P_s = Absolute average gas static pressure in dilution tunnel, = $P_{bar} + P_g$, in Hg

P_{bar} = Barometric pressure at test site, in. Hg

P_g = Static pressure of tunnel, in. H_20; (in Hg = in H_20/13.6)

M_s = **The dilution tunnel wet molecular weight; M_s = 28.78 assuming a dry weight of 29 lb/lb-mole

Sample calculation:

$$Fp = \frac{14.04}{15.33} = 0.916$$

$$V_s = 0.916 \times 85.49 \times 0.99 \times 0.228 \times \left(\frac{88.9 + 460}{\left(30.32 + \frac{-0.18}{13.6} \right) \times 28.78} \right)^{1/2}$$

V_s = **14.03** ft/s

*The ASTM test standard mistakenly has the square root of the average delta p instead of the average of the square root of delta p. The current EPA Method 2 is also incorrect. This was verified by Mike Toney at EPA.

**The ASTM test standard mistakenly identifies Ms as the dry molecular weight. It should be the wet molecular weight as indicated in EPA Method 2.

Q_{sd} – Average gas flow rate in dilution tunnel, dscf/hr
ASTM E2515 equation (3)

$$Q_{sd} = 3600 \times (1 - B_{ws}) \times v_s \times A \times \frac{T_{std}}{T_{s(avg)}} \times \frac{P_s}{P_{std}}$$

Where:

3600	=	Conversion from seconds to hours (ASTM method uses 60 to convert in minutes)
B_{ws}	=	Water vapor in gas stream, proportion by volume; assume 2%
A	=	Cross sectional area of dilution tunnel, ft^2
T_{std}	=	Standard absolute temperature, 528 °R
P_s	=	Absolute average gas static pressure in dilution tunnel, = P_{bar} + P_g , in Hg
$T_{s(avg)}$	=	Absolute average gas temperature in the dilution tunnel, °R; (°R = °F + 460)
P_{std}	=	Standard absolute pressure, 29.92 in Hg

Sample calculation:

$$Q_{sd} = 3600 \times (1 - 0.02) \times 14.03 \times 0.196 \times \frac{528}{88.9 + 460} \times \frac{30.3 + \frac{-0.18}{13.6}}{29.92}$$

Q_{sd} = **9465.3** dscf/hr

$V_{m(std)}$ – Volume of Gas Sampled Corrected to Dry Standard Conditions, dscf
ASTM E2515 equation (6)

$$V_{m(std)} = K_1 \, V_m \, Y \frac{P_{bar} + \left(\frac{\Delta H}{13.6}\right)}{T_m}$$

Where:

K_1	=	17.64 °R/in. Hg
V_m	=	Volume of gas sample measured at the dry gas meter, dcf
Y	=	Dry gas meter calibration factor, dimensionless
P_{bar}	=	Barometric pressure at the testing site, in. Hg
ΔH	=	Average pressure differential across the orifice meter, in. H_2O
T_m	=	Absolute average dry gas meter temperature, °R

Sample Calculation:

Using equation for Train 1:

$$V_{m(std)} = 17.64 \times 32.942 \times 0.981 \times \frac{\left(30.32 + \frac{1.36}{13.6}\right)}{(79.5 + 460)}$$

$V_{m(std)}$ = **32.138** dscf

Using equation for Train 2:

$$V_{m(std)} = 17.64 \times 32.851 \times 0.984 \times \frac{\left(30.32 + \frac{1.15}{13.6}\right)}{(80.1 + 460)}$$

$V_{m(std)}$ = **32.097** dscf

Using equation for ambient train:

$$V_{m(std)} = 17.64 \times 0.00 \times 1 \times \frac{\left(\underline{30.32} + \frac{0.00}{13.6}\right)}{(70.3 + 460)}$$

$V_{m(std)}$ = **0** dscf

m_n – Total Particulate Matter Collected, mg
ASTM E2515 Equation (12)

$$m_n = m_p + m_f + m_g$$

Where:

m_p = mass of particulate matter from probe, mg

m_f = mass of particulate matter from filters, mg

m_g = mass of particulate matter from filter seals, mg

Sample Calculation:

Using equation for Train 1 (first hour):

m_n = 0.0 + 1.2 + 0.0

m_n = 1.2 mg

Using equation for Train 1 (post-first hour):

m_n = 0.8 + 0.2 + 0.8

m_n = 1.8 mg

Train 1 aggregate:

m_n = 1.2 + 1.8

m_n = **3.0** mg

Using equation for Train 2:

m_n = 0.9 + 0.8 + 1.4

m_n = **3.1** mg

C_s - Concentration of particulate matter in tunnel gas, dry basis, corrected to standard conditions, g/dsc
ASTM E2515 equation (13)

$$C_s = K_2 \times \frac{m_n}{V_{m(std)}}$$

Where:

K_2	=	Constant, 0.001 g/mg
m_n	=	Total mass of particulate matter collected in the sampling train, mg
$V_{m(std)}$	=	Volume of gas sampled corrected to dry standard conditions, dscf

Sample calculation:

For Train 1:

$$C_s = 0.001 \times \frac{3.0}{32.14}$$

C_s = **0.00009** g/dscf

For Train 2

$$C_s = 0.001 \times \frac{3.1}{32.10}$$

C_s = **0.00010** g/dscf

For Ambient Train

$$C_r = 0.001 \times \frac{0.0}{0}$$

C_r = **0** g/dscf

E_T – Total Particulate Emissions, g
ASTM E2515 equation (15)

$$E_T = (c_s - c_r) \times Q_{std} \times \theta$$

Where:

C_s	=	Concentration of particulate matter in tunnel gas, g/dscf
C_r	=	Concentration particulate matter room air, g/dscf
Q_{std}	=	Average dilution tunnel gas flow rate, dscf/hr
θ	=	Total time of test run, minutes

Sample calculation:

For Train 1

E_T = (0.000093 - 0) x 9465.3 x 200 /60

E_T = 2.95 g

For Train 2

E_T = (0.000097 - 0) x 9465.3 x 200 /60

E_T = 3.05 g

Average

E = 3.00 g

Total emission values shall not differ by more than 7.5% from the total average emissions

7.5% of the average =	0.22
Train 1 difference =	0.05
Train 2 difference =	0.05

PR - Proportional Rate Variation
ASTM E2515 equation (16)

$$PR = \left[\frac{\theta \times V_{mi} \times V_s \times T_m \times T_{si}}{\theta_i \times V_m \times V_{si} \times T_{mi} \times T_s} \right] \times 100$$

Where:

θ = Total sampling time, min

θ_i = Length of recording interval, min

V_{mi} = Volume of gas sample measured by the dry gas meter during the “ith” time interval, dcf

V_m = Volume of gas sample as measured by dry gas meter, dcf

V_{si} = Average gas velocity in the dilution tunnel during the "ith" time interval, ft/sec

V_s = Average gas velocity in the dilution tunnel, ft/sec

T_{mi} = Absolute average dry gas meter temperature during the "ith" time interval, ^oR

T_m = Absolute average dry gas meter temperature, ^oR

T_{si} = Absolute average gas temperature in the dilution tunnel during the "ith" time interval, ^oR

T_s = Absolute average gas temperature in the dilution tunnel, ^oR

Sample calculation (for the first 1 minute interval of Train 1):

$$PR = \left(\frac{200 \times 1.598 \times 14.03 \times (87.0 + 460) \times (79.5 + 460)}{10 \times 32.94 \times 14.00 \times (88.9 + 460) \times (73.0 + 460)} \right) \times 100$$

PR = 98 %

PM_R – Particulate emissions for test run, g/hr
ASTM E2780 equation (6)

$$PM_R = 60 (E_T/\theta)$$

Where,

E_T = Total particulate emissions, grams

θ = Total length of full integrated test run, min

Sample Calculation:

E_T (Dual train average) = 3.00 g

θ = 200 min

$PM_R = 60$ x (3.00 / 200)

PM_R = **0.90** g/hr

PM_F – Particulate emission factor for test run, g/dry kg of fuel burned
ASTM E2780 equation (7)

$$PM_F = E_T/M_{FTAdb}$$

Sample Calculation:

E_T (Dual train average) = 3.00 g

M_{Bdb} = 3.17 kg

PM_F = 3.00 / 3.17

PM_F = **0.94** g/kg

Section 5

Labeling & Owner's Manual

Tested & Listed By CSA US Portland Oregon USA OMNI-Test Laboratories, Inc.

MODEL / MODÈLE: "Intrepid FlexBurn® 2115/2115-CAT"
LISTED SOLID FUEL ROOM HEATER BURNING FIREPLACE STOVE
HOMOLOGUE POELE A COMBUSTIBLE SOLIDES

Serial No.
N° de série: HF

BARCODE LABEL

Report #/Rapport #0135WS038E
Tested to / Testé à: UL 1482-2011, UL 737-2007, ULC-S627-00, EPA 28R ASTM E2780
THIS STOVE MEETS UL 737, STANDARD FOR FIREPLACE STOVES, WHEN FIRESCREEN IS PROVIDED. **APPROVED FOR USE IN MOBILE HOMES IN THE U.S. AND CANADA.**
Install and use only in accordance with manufacturer's installation and operation instructions. Contact local building or fire officials about restrictions and installation inspection in your area. Install only with legs provided in accordance with installation instructions.
WARNING: Risk of flame and smoke spillage. Do not obstruct the space beneath the heater.
Fuel: Use with solid wood fuel only. Do not burn other fuels.
Build a fire directly on hearth only. Do not elevate fire. Keep doors fully closed or fully open while operating.
Chimney: Use a minimum 6" diameter factory built high temperature (H.T.) chimney which is listed to UL-103-1985 (2100°F) or 8" X 8" nominal or larger approved masonry chimney with flue liner.
Do not connect this unit to a chimney flue serving another appliance.
Chimney Connector: Use a minimum 6" diameter 24 gauge chimney connector. Install chimney connector at least 18" from ceiling. Refer to local building codes and Vermont Castings Owner's Guide for precautions for passing a chimney or chimney connector through a combustible wall or ceiling.
Floor Protection U.S.: With the Vermont Castings Bottom Heat Shield installed most installations require an approved hearth pad. The Encore 2040 was test using a 1/2" (13mm) non-combustible hearth material with a thermal conductivity, (k) = 0.47 BTU-in/hr ft²-°F, resulting in the requirement of providing total thermal resistance (R) of 1.06. (Cover with material if desired). The floor protector is required under the stove and must extend 16" from the front, 6" from the rear and sides. It must extend under the chimney connector and 2" to either side. Without Vermont Castings Bottom Heat Shield, only installations over a totally non-combustible floor such as unpainted concrete over earth are acceptable. UL 737 Doors open require 1" floor protection.
Floor Protection Canada: Operate only with Vermont Castings Bottom Heat Shield in place. When installed on a combustible floor, the Encore 2040 was tested using a 1/2" (13mm) non-combustible hearth material with a thermal conductivity, (k) = 0.47 BTU-in/hr ft²-°F, resulting in the requirement of providing total thermal resistance (R) of 1.06. (Cover with decorative non-combustible material if desired).The floor protection must extend 450mm (18in.) to the front and 200mm (8in.) to the front and 200mm (8in.) to the sides and rear. Do not obstruct the space under the heater.
Optional Components: Spark screen Part No. 0127 (only for use with 8" diameter connector and chimney), Flue Collar/8" oval Part No. 0555, Mobile Home Kit-0336, Fan Kit Part No. FK26. 115V 60Hz 1.1 FLA
Replace glass only with Vermont Castings 5mm ceramic glass.
Do not remove or cover this label. **Catalytic Combustor Part No. 30005353**
CAUTION: Burning of materials other than the specified fuels may make the Catalyst in the combustor inactive. The combustor is fragile, handle carefully. The performance of the catalytic device or it's durability have not been evaluated as part of the certification.

Combustion air cannot be obstructed.
Damper must be open before opening doors.
Do not overfire. Glowing parts indicate overfiring.
The space heater must be installed with the legs provided, attached as shown in the installation instructions.

Installer conformément aux instructions du fabricant. Contacter les autorités locates pour connaître les restrictions et inspections nécessaires. N'installer que les pattes qui sont incluses, en conformité avec les instructions du fabricant.
Ne pas obstruer l'espace sous le poele.
Attention: Risque de flammes et de fumée spilage. Ne pas obstruer l'espace sous le chauffe-eau.
Le registre doit être ouvert avant d'ouvrir les portes.
Combustible: N'utiliser que du bois comme combustible. Ne pas utiliser d'autres types de combustible. Inspecter et nettoyer la cheminée fréquemment - Sous certainesusages, l'accumulation de créosote peu se produire rapidement. Garder les portes toutes fermées ou toutes ouvertes durant l'opération.
Faire le feu directement sur la grille prévue à cet effet. Laisser les portes du poêle soit complètement ouverts ou complètement fermées lors de l'utilisation. Ne pasraccorder le conduit de cheminée du poêle à une cheminée servant à d'autres appareils. N'utiliser que les vitres de céramique Vermont Castings en cas de remplacement de celles-ci.
Protection plancher Canada: fonctionner uniquement avec Vermont Castings écran thermique inférieur en place. Lorsqu'il est installé sur un plancher combustible, le Encore 2010 a été testé en utilisant un 1/2 "(13mm) de matériau de âtre non-combustible avec une conductivité, (k) = 0,47 BTU-in / hr ft²- °F, ce qui entraîne l'obligation de providinga résistance thermique totale (R) de 1,06. (Couvrir avec un matériau non-combustible décorative si désiré) .La protection de plancher doit se prolonger 450mm (18po.) À l'avant et 200 mm (8 po.) À l'avant et 200 mm (8 po.) Sur les côtés et à l'arrière. Ne pas obstruer l'espace sous le poêle.
Accessories disponibles au Canada: écran pare feu 1907 (n'utiliser qu'avac un conduit d'evacuation et une chiminée de 6" de diametre), ventilateur FK26.
Catalyseur pièce no. 30005353
Replacer uniquement qu'avec une glace 5mm Vermont Castings.
Attention: Bruler des matières autres que celles spécifiées pourrait rendre le caralyseur inactif.
Attention: Le catalyseur est fragile, manipulaer avec soin.

Date of Manufacture / Date de fabrication:

2018	2019	2020	JAN	FEB	MAR	APR	MAY	JUN	JUL	AUG	SEP	OCT	NOV	DEC
■	■	■	■	■	■	■	■	■	■	■	■	■	■	■

Manufactured by / Fabriqué par: Hearth and Home Technologies 352 Mountain House Road, Halifax PA 17032

VERMONT CASTINGS

Made in U.S.A. of US and imported parts. / Fabriqué aux États-Unis-d'Amérique par des pièces d'origine américaine et pièces importées.

US ENVIRONMENTAL PROTECTION AGENCY
Certified to comply with 2020, particulate emissions standards at .6g/hr (without catalyst) and .3 g/hr (catalytic). This wood heater needs periodic inspection and repalcement for proper operation. Consult the Owner's Manual for further information. It is against Federal Regulations to operate this wood heater in a manner inconsistent with operating instructions in the Owner's Manual.

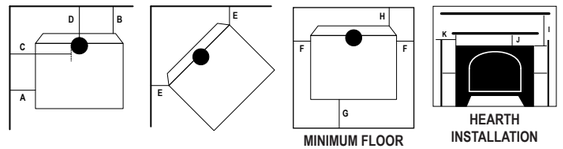

MINIMUM FLOOR PROTECTION
HEARTH INSTALLATION

*Less than 3/4" (19mm) protrusion. For additional types of installations and clearabces consult your Owner's Manual. Por autres modes d'installation et degagement supplementaires, consultz votres manual du proprietaire.
Most vertical installations require a ceiling heat shield and a flue collar heat shield to be installed. Consult your Owner's Manual.

MINIMUM CLEARANCES TO COMBUSTIBLE CONSTRUCTION / MINIMUM DE DEGAGEMENT JUSQU'A LA CONSTRUCTION COMBUSTIBLE

A = Unit to Sidewall	19"
B = Unit to Backwall	20"
C = Chimney Connector to Sidewall	29"
D = Chimney Connector to Backwall	21"
E = Unit to Adjacent Wall	18-1/2"
F = Sides (Floor Protection)	6"
G = Front to Glass (Floor Protection)	16"
H = Rear (Floor Protection)	6"
I = Top to Bottom of Mantel	22"
J = Top to Bottom of Top Trim*	28"
K = Edge of Top to Side Wall	21"

A = Entre le mur lateral et l'appareil	483mm
B = Entre le mur arriereet l'appareil	508mm
C = Entre le tuyau et le mur lateral	737mm
D = Entre le tuyau et le mur arriere	534mm
E = Entre le mur adjacent et l'appareil	470mm
F = Côtes (la protection de plancher)	203mm
G = Devant, par rapport au verr	457mm
H = Arrière (la protection de plancher)	203mm
I = De haut en bas de Mantel	556mm
J = De haut en bas de la moulure supérieure*	712mm
K = Edge of Haut de paroi latérale	534mm

CAUTION: HOT WHILE IN OPERATION- DO NOT TOUCH- KEEP CHILDRENAND CLOTHING AWAY-CONTACT MAY CAUSE SKIN BURNS-SEE NAMEPLATE AND INSTRUCTIONS. KEEP FURNISHINGS AND OTHER COMBUSTIBLE MATERIALS A CONSIDERABLE DISTANCE AWAY FROM THE APPLIANCE

ATTENTION: CHAUD LORS DU FONCTIONNEMENT-NE TOUCHEZ PAS L'APPAREIL-GARDEZ LES ENFANTS ET LES VÊTEMENTS ÉLOIGNÉS- TOUT CONTACT PEUT ENTRAÎNER DES BRÛLURES DE LA PEAU. RÉFÉREZ-VOUS À LA PLAQUE SIGNALÉTIQUE ET AU MODE D'EMPLOI. GARDEZ LE MOBILIER ET LES AUTRES MATÉRIAUX COMBUSTIBLES BIEN À L'ÉCART DE L'APPAREIL.

3-90-30007343_R1

LABEL TICKET			
ECO:		**LABEL SIZE:**	6.5" H x 13.5" W
PART # / REV:	30007343_R1	**ADHESIVE:**	
ORIGINATOR:	Spidlet	**MATERIAL:**	24 Gauge Aluminum
DATE:	01/18	**INK:**	Black Background Aluminum Lettering
VERMONT CASTINGS 352 Mountain House Road Halifax, PA 17032		(4) Slotted Holes = .156 x .25 (1) Round Hole = .630 (1) Round Hole = .140 (4) Corners = R.062 Barcode label must have the serial number on it. The barcode label must be able to read Code 39 Full ASCII.	

Owner's Manual
Operation & Care

INSTALLER: Leave this manual with party responsible for use and operation.
OWNER: Retain this manual for future reference.

Contact your dealer with questions on installation, operation, or service.

NOTICE: SAVE THESE INSTRUCTIONS

VERMONT CASTINGS

Intrepid FlexBurn® Wood Burning Stove
Model 2115 / 2115-CAT

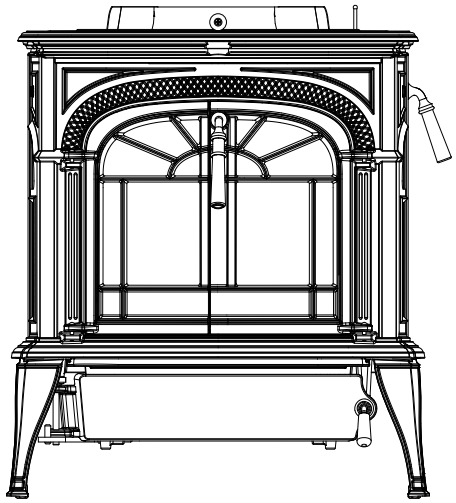

Installation and service of this appliance should be performed by qualified personnel. Hearth & Home Technologies recommends HHT Factory Trained or NFI certified professionals.

hearthED FACTORY TRAINING Fuel Your Fire

NFI NATIONAL FIREPLACE INSTITUTE® A CERTIFICATION AGENCY

NOTE

To obtain a French translation of this manual, please contact your dealer or visit www.vermontcastings.com

Pour obtenir une traduction française de ce manuel, s'il vous plaît contacter votre revendeur ou visitez www.vermontcastings.com

⚠ WARNING



If the information in these instructions is not followed exactly, a fire may result causing property damage, personal injury, or death.

- Do not store or use gasoline or other flammable vapors and liquids in the vicinity of this or any other appliance.
- Do not over fire - If appliance or chimney connector glows, you are over firing. Over firing will void your warranty.
- Comply with all minimum clearances to combustibles as specified. Failure to comply may cause house fire.

⚠ WARNING



HOT SURFACES!
Glass and other surfaces are hot during operation AND cool down.
Hot glass will cause burns.

- Do not touch glass until it is cooled
- NEVER allow children to touch glass
- Keep children away
- CAREFULLY SUPERVISE children in same room as fireplace.
- Alert children and adults to hazards of high temperatures
- **High temperatures may ignite clothing or other flammable materials.**
- Keep clothing, furniture, draperies and other flammable materials away.

Congratulations on your choice of a Vermont Castings Intrepid FlexBurn® Wood Stove. At Vermont Castings we take American craftsmanship seriously. We assure you that your cast-iron Vermont Castings stove has been made with the utmost care and will provide you with many years of service.

As you become acquainted with your new stove, you will find that its appearance is matched by its functionality, due to cast iron's unique ability to absorb and radiate heat.

Also, Vermont Castings products are among the cleanest-burning wood stoves available today. However, clean burning depends on both the manufacturer and the operator. Please read this manual carefully to understand how to properly operate and maintain your stove.

At Vermont Castings, we are committed to your satisfaction as a customer. That is why we maintain an exclusive network of the finest dealers in the industry. Our dealers are chosen for their expertise and dedication to customer service. Feel free to contact your Authorized Vermont Castings Dealer anytime you have a particular question about your stove or its performance.

This manual contains valuable instructions on the operation of your Vermont Castings Intrepid FlexBurn® Wood Stove. It also contains useful information on maintenance. Please read the manual thoroughly and keep it as a reference.

Note: Cast iron is an artisan crafted material, which is made the same way today as nearly 2000 years ago. Due to the intrinsic primitive nature of the casting process, part to part variation is normal and adds to the character of a hand built cast iron appliance.

US ENVIRONMENTAL PROTECTION AGENCY

Certified to comply with 2020, particulate emissions standards at .6g/hr (without catalyst) and .3 g/hr (catalytic).

Please read this entire manual before you install and use your new stove. Failure to follow instructions may result in property damage, bodily injury, or even death.

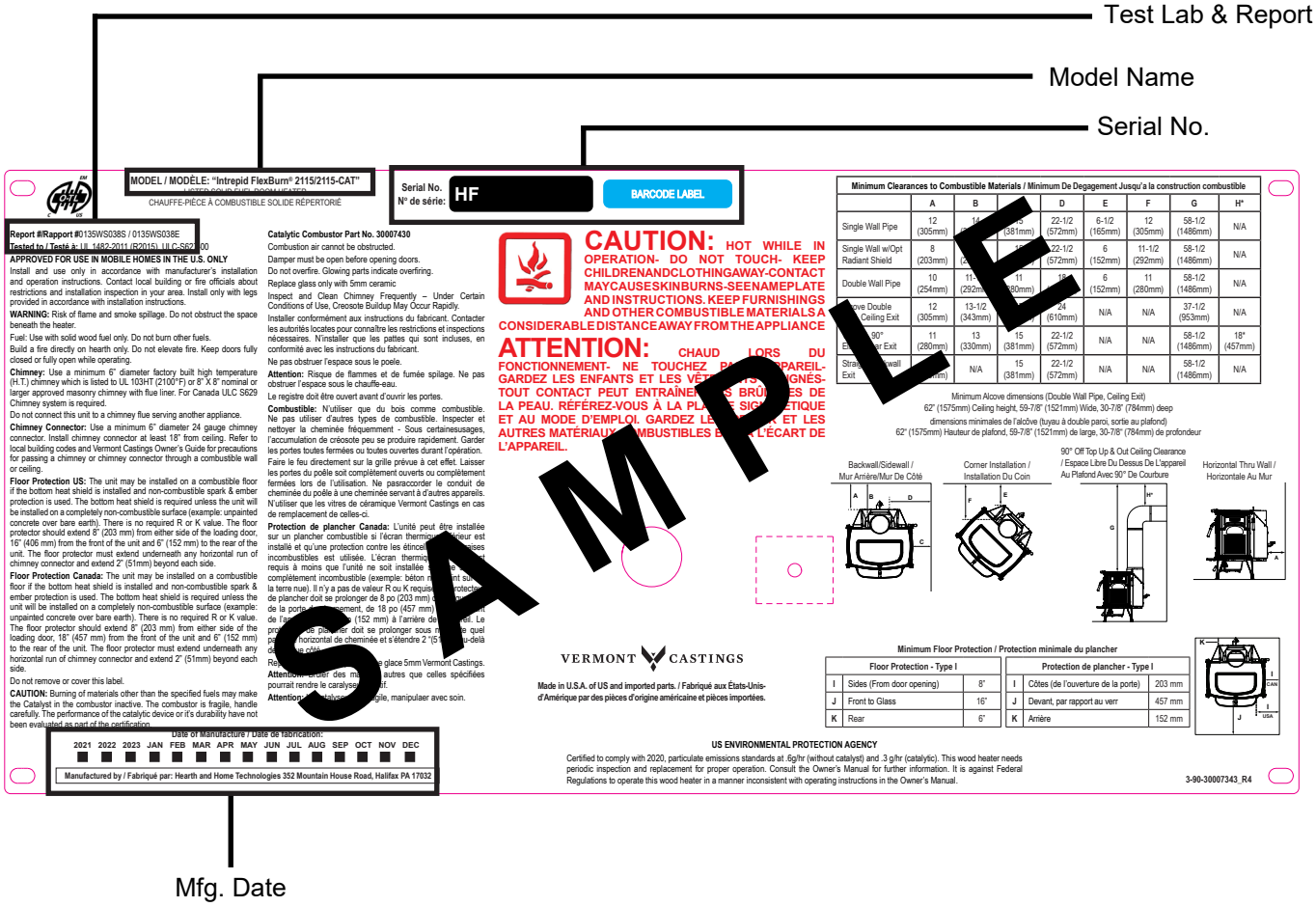

Safety Alert Key:

- ***DANGER!*** Indicates a hazardous situation which, if not avoided will result in death or serious injury.
- ***WARNING!*** Indicates a hazardous situation which, if not avoided could result in death or serious injury.
- ***CAUTION!*** Indicates a hazardous situation which, if not avoided, could result in minor or moderate injury.
- ***NOTICE:*** Indicates practices which may cause damage to the appliance or to property.

TABLE OF CONTENTS

A. Warranty Policy 4

1 Product Specific and Important Safety Information

➔ A. Appliance Certification 6
B. BTU & Efficiency Specifications 6
C. Mobile Home Approved (USA ONLY) 6
D. Glass Specifications 6
E. California Safety Information 6

2 Operating Instructions

A. The Intrepid FlexBurn® Controls 8
B. Conditioning Your Stove 9
C. Ways to Add Fuel 10
D. Ash Disposal 13
E. Opacity (Visible Smoke) 14
F. Negative Pressure 14
G. Important Information 15

3 Maintenance

A. Cleaning and Replacement of the Glass 16
B. Damper Adjustment 17
C. Door Latch Adjustment 17
D. Gasket Replacement 17
E. The Chimney System 18
F. The Catalytic Element 19

4 Troubleshooting Guide 21

5 Reference Material

A. Service & Maintenance Log 22
B. Service Parts List 23
C. Contact Information 28

➔ = Contains updated information

A. Warranty Policy

Hearth & Home Technologies LLC
LIMITED LIFETIME WARRANTY

Hearth & Home Technologies LLC ("HHT") extends the following warranty for HHT gas, wood, pellet and electric hearth appliances (each a "Product" and collectively, the "Product(s)") and certain component parts set forth in the table below ("Component Part(s)") that are purchased from a HHT authorized dealer or distributor.

WARRANTY COVERAGE:

HHT warrants that the Products and their Component Parts will be free from defects in materials and workmanship for the applicable period of Warranty coverage set forth in the table below ("Warranty Period"). If a Product or Component Parts are found to be defective in materials or workmanship during the applicable Warranty Period, HHT will, at its option, repair the applicable Component Part(s), replace the applicable Component Part(s), or refund the purchase price of the applicable Product(s). The maximum amount recoverable under this Warranty is limited to the purchase price of the Product. This Warranty is transferable from the original purchaser to subsequent owners, but the Warranty Period will not be extended in duration or expanded in coverage for any such transfer. This Warranty is subject to conditions, exclusions, and limitations as described below.

WARRANTY PERIOD:

Warranty coverage begins at the date of installation. In the case of new home constructions, Warranty coverage begins on the date of first occupancy of the dwelling or six months after the sale of the Product(s) by an independent, authorized HHT dealer or distributor, whichever occurs earlier. However, the Warranty coverage shall commence no later than 24 months following the date of Product shipment from HHT, regardless of the installation or occupancy date.

The term "Lifetime" in the table below is defined as: 20 years from the beginning date of warranty coverage for gas appliances, and 10 years from the beginning date of warranty coverage for wood and pellet appliances. These time periods reflect the minimum expected useful lives of the designated Component Parts under normal operating conditions.

Warranty Period		**HHT Manufactured Appliances and Venting**					
Component Parts	Labor	Gas	Pellet	Wood	Electric	Venting	Component Parts Covered by this Warranty
1 Year		X	X	X		X	All parts including handles, external enameled components and other material except as covered by Warranty Conditions, Warranty Exclusions, and Warranty Limitations listed
2 Years					X		All parts except as covered by Warranty Conditions, Warranty Exclusions, and Warranty Limitations listed
2 years			X	X			Igniters, Auger Motors, Electronic Components, and Glass
		X					Electrical components limited to modules, remotes/wall switches, valves, pilots, blowers, junction boxes, wire harnesses, transformers and lights (excluding light bulbs)
		X		X			Molded Refractory Panels, Glass Liners
3 years			X				Firepots, burnpots, mechanical feeders/auger assemblies
5 years	1 year	X					Vent Free Burners, Vent Free Logs
			X	X			Castings, Medallions and Baffles
6 years	3 years			X			Catalysts
7 years	3 years		X	X			Manifold tubes, HHT Chimney and Terminations
10 years	1 year	X					Burners, logs and refractory
Limited Lifetime	3 years	X	X	X			Firebox and heat exchanger, FlexBurn® System (engine, inner cover, access cover and fireback)
1 Year	None	X	X	X	X	X	All purchased replacement parts

WARRANTY CONDITIONS:

- Because HHT cannot control the quality of any Products sold by unauthorized sellers, this Warranty only covers Products that are purchased through an HHT authorized dealer or distributor unless otherwise prohibited by law; a list of HHT authorized dealers is available on the HHT branded websites.
- This Warranty is only valid while the applicable Product remains at the site of original installation.
- This Warranty is only valid in the country in which the HHT authorized dealer or distributor that sold the applicable Product is authorized to sell applicable Product.
- Contact your installing distributor or dealer for Warranty service. If the installing dealer or distributor is unable to provide necessary parts, contact the nearest HHT authorized dealer or supplier. Additional service fees may apply if you are seeking Warranty service from a dealer other than the dealer from whom you originally purchased the applicable Product.
- No HHT consumer should bear cost of warranty service or costs incurred while servicing warranty claims (i.e., travel, gas, or mileage) when the service is performed within the terms of this Warranty. Check with your dealer or distributor in advance for any costs to you when arranging a warranty call. Travel and shipping charges for parts are not covered by this Warranty.

WARRANTY EXCLUSIONS:

This Warranty does not cover the following:

- Changes in surface finishes as a result of normal use. As a heating appliance, some changes in color of interior and exterior surface finishes may occur. This is not a flaw and is not covered under the Warranty.
- Damage to printed, plated, or enameled surfaces caused by fingerprints, accidents, misuse, scratches, melted items or other external sources and residues left on the plated surfaces from the use of abrasive cleaners or polishes.
- Repair or replacement of parts that are subject to normal wear and tear during the Warranty Period are not covered. These parts include: paint, wood and pellet gaskets, firebricks, grates, flame guides, batteries and the discoloration of glass.
- Minor expansion, contraction, or movement of certain parts causing noise. These conditions are normal and complaints related to this noise are not covered by this Warranty.
- Damages resulting from: (1) failure to install, operate, or maintain the applicable Product in accordance with the installation instructions, operating instructions, and listing agent identification label furnished with the applicable Product; (2) failure to install the applicable Product in accordance with local building codes; (3) shipping or improper handling; (4) improper operation, abuse, misuse, continued operation with damaged, corroded or failed components, accident, or improperly/incorrectly performed repairs; (5) environmental conditions, inadequate ventilation, negative pressure, or drafting caused by tightly sealed constructions, insufficient make-up air supply, or handling devices such as exhaust fans or forced air furnaces or other such causes; (6) use of fuels other than those specified in the operation instructions; (7) installation or use of components not supplied with the applicable Product or any other components not expressly authorized and approved by HHT; (8) modification of the appliance not expressly authorized and approved by HHT in writing; and/or (9) interruptions or fluctuations of electrical power supply to the applicable Product.
- Non-HHT venting components, hearth connections or other accessories used in conjunction with the applicable Product.
- Any part of a pre-existing fireplace system in which an insert or a decorative gas applicable Product is installed.
- HHT's obligation under this Warranty does not extend to the Product's capability to heat the desired space. Information is provided to assist the consumer and the dealer in selecting the proper Product for the application. Consideration must be given to the Product location and configuration, environmental conditions, insulation and air tightness of the structure.

This warranty is void if:

- The applicable Product has been over-fired, operated in atmospheres contaminated by chlorine, fluorine, or other damaging chemicals. Over-firing can be identified by, but not limited to, warped plates or tubes, deformation/warping of interior cast iron structure or components, rust colored cast iron, bubbling, cracking and discoloration of steel or enamel finishes.
- The applicable Product is subjected to prolonged periods of dampness or condensation.
- There is any damage to the applicable Product due to water or weather damage which is the result of, but not limited to, improper chimney or venting installation.

LIMITATIONS OF REMEDIES AND LIABILITY:

- **EXCEPT TO THE EXTENT PROVIDED BY LAW, HHT MAKES NO EXPRESS WARRANTIES OTHER THAN THE WARRANTY SPECIFIED HEREIN. The owner's exclusive remedy and HHT's sole obligation under this Warranty or in contract, tort or otherwise, shall be limited to replacement of the Component Part(s), repair of the Component Part(s), or refund of the original purchase price of the applicable Product(s), as specified above; provided, however, that (i) if HHT is unable to provide replacement of the Component Part(s) and repair of the Component Part(s) is not commercially practicable or cannot be timely made, or (ii) the customer is willing to accept a refund of the purchase price of the applicable Product(s), HHT may discharge all such obligations by refunding the purchase price of the applicable Product. In no event will HHT be liable for any incidental or consequential damages caused by defects in the applicable Product. Some States do not allow the exclusion or limitation of incidental or consequential damages, so the above limitation or exclusion may not apply to you. This Warranty gives you specific legal rights and you may also have other rights which vary from State to State. THE DURATION OF ANY IMPLIED WARRANTY IS LIMITED TO DURATION OF THE EXPRESSED WARRANTY SPECIFIED ABOVE FOR THE APPLICABLE PRODUCT. Some States do not allow limitations on how long an implied warranty lasts, so the above limitation may not apply to you.**

1 Product Specific and Important Safety Information

A. Appliance Certification

MODEL:	Intrepid FlexBurn® 2115/2115-CAT
LABORATORY:	OMNI Test Laboratories, Inc
REPORT NO.	0135WS038S / 0135WS038E
TYPE:	Solid Fuel Type Room Heaters
➔ **STANDARD(s):**	UL 1482, ULC-S627-00

B. BTU & Efficiency Specifications

EPA Report #:	114-18 (without catalyst) 115-18 (catalytic)
EPA Certified Emissions:	.6 g/hr (without catalyst) .3 g/hr (catalytic)
***LHV Tested Efficiency:**	80.3% (without catalyst) 82.8% (catalytic)
****HHV Tested Efficiency:**	74.3% (without catalyst) 76.7% (catalytic)
*****EPA BTU Output:**	12,500 - 18,500 (without catalyst)
	10,700 - 16,000 (catalytic)
******Peak BTU/Hour Output:**	36,900 (without catalyst) 34,900 (catalytic)
Vent Size:	6 Inch (152 mm)
Firebox Size:	1.31 cu. ft.
Recommended Length:	14”
Max. Wood Length:	15”
Fuel Orientation:	East, West
Fuel	Seasoned Cordwood (20% moisture)
* Weighted average LHV efficiency using Douglas Fir dimensional lumber and data collected during EPA emissions test.	
**Weighted average HHV efficiency using Douglas Fir dimensional lumber and data collected during EPA emissions test.	
***Efficiencies are based on test results calculated using B415; these calculated efficiencies are then used to calculate output BTU’s.	
******A peak BTU out of the appliance calculated using the maximum first hour burn rate from the High EPA Test and the BTU content of cord wood (8600) times the efficiency.	

The Vermont Castings Intrepid FlexBurn® Wood Appliance meets the U.S. Environmental Protection Agency’s crib wood emission limits for wood appliances sold after May 15, 2020.

This wood appliance needs periodic inspection and repair for proper operation. It is against federal regulations to operate this wood appliance in a manner inconsistent with operating instructions in this manual.

C. Mobile Home Approved (USA ONLY)

- This appliance is approved for mobile home installations in the USA when not installed in a sleeping room and when an outside combustion air inlet is provided.
- The structural integrity of the mobile home floor, ceiling, and walls must be maintained.
- The appliance must be properly grounded to the frame of the mobile home with #8 copper ground wire, and chimney must be listed to UL103 HT or a listed UL-1777 full length six inch (152mm) diameter liner must be used.
- Outside air must be provided in a mobile home installation.
- Mobile home bracket kit #0003264 must be installed.

D. Glass Specifications

This appliance is equipped with 5mm ceramic glass. Replace glass only with 5mm ceramic glass. Please contact your dealer for replacement glass.

E. California Safety Information

WARNING

This product and the fuels used to operate this product (wood), and the products of combustion of such fuels, can expose you to chemicals including carbon black, which is known to the State of California to cause cancer, and carbon monoxide, which is know to the State of California to cause birth defects or other reproductive harm. For more information go to: www.P65Warnings.ca.gov

WARNING



Fire Risk.

Hearth & Home Technologies disclaims any responsibility for, and the warranty will be voided by, the following actions:

- Installation and use of any damaged appliance.
- Modification of the appliance.
- Installation other than as instructed by Hearth & Home Technologies.
- Installation and/or use of any component part not approved by Hearth & Home Technologies.
- Operating appliance without fully assembling all components.
- Operating appliance without legs attached (if supplied with appliance).
- Do NOT Overfire - If appliance or chimney connector glows, you are overfiring.

Any such action that may cause a fire hazard.

Improper installation, adjustment, alteration, service or maintenance can cause injury or property damage.

For assistance or additional information, consult a qualified installer, service agency or your dealer.

NOTE: Hearth & Home Technologies, manufacturer of this appliance, reserves the right to alter its products, their specifications and/or price without notice.

Vermont Castings is a registered trademark of Hearth & Home Technologies.

2 Operating Instructions

A. The Intrepid FlexBurn® Controls

Two controls regulate the performance of the Intrepid FlexBurn®: a **primary air control** supplies oxygen for the fire, and a **damper** directs air flow within the stove to activate and deactivate the combustion system. (Figure 2.1)

Symbols on the stove are reminders of the correct directions for using the controls. The words 'Left' and 'right' in these directions are *facing the stove*.

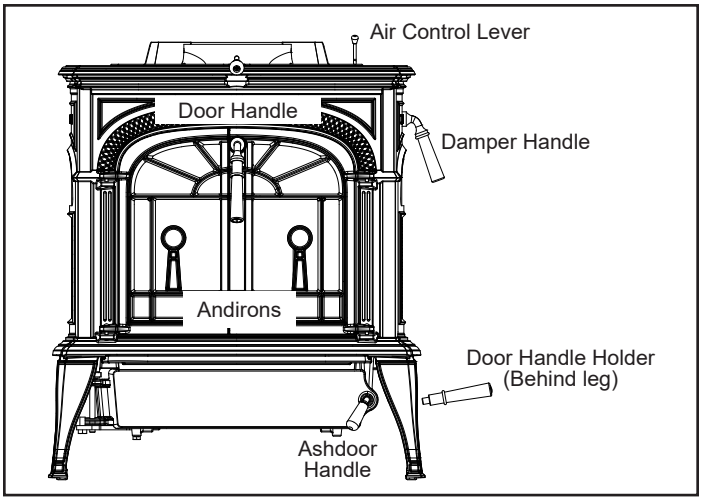

Figure 2.1 - The Intrepid FlexBurn® controls are conveniently located and easy to operate.

A Single Air Control Regulates Heat Output and Burn Time

The **primary air control lever**, on the top-right of the stove, controls the amount of incoming air for starting, maintaining, and reviving a fire.

Once the air control is manually set, a bi-metallic thermostat automatically maintains the heat output at a constant level for a more even heat over the life of the burn.

More air entering the stove makes the fire burn hotter and faster, while less air prolongs the burn at a lower heat output level.

For the greatest air supply and maximum heat output (but the shortest burn time), move the lever toward the flue collar. For a fire that will last longer with less heat, move the lever away from the flue collar. (Figure 2.2)

⚠ WARNING

This wood heater has a manufactured-set minimum low burn rate that must not be altered. It is against federal regulations to alter this setting or otherwise operate this wood heater in a manner inconsistent with operating instructions in this manual.

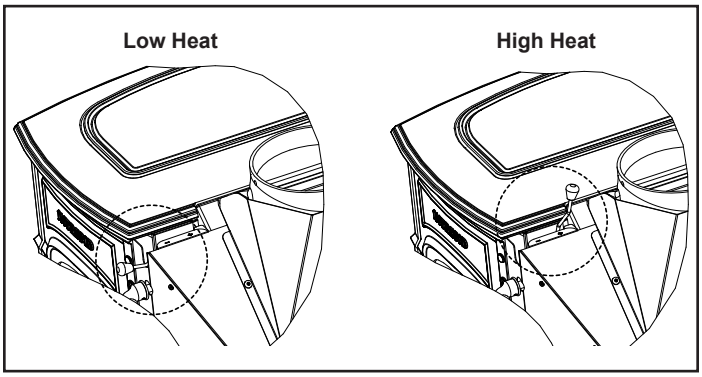

Figure 2.2 - The handle may be positioned anywhere between the two extremes for different heat levels.

A Damper Directs Air Flow Within the Stove

The **damper (by-pass) handle** on the right side of the stove operates the damper to direct air flow within the stove.

The damper is **open** when the handle points **down**, enabling smoke to pass directly into the chimney. The damper must be open when starting or reviving a fire, and always when the griddle or doors are opened.

The damper is **closed** when the handle points **forward.** Smoke travels through the secondary combustion system where it can be further burned, before passing up the chimney. (Figure 2.3)

The damper should always be either fully open or fully closed. There are no intermediate positions. When closing the damper, be sure to pull firmly enough to snap the handle into the locked position.

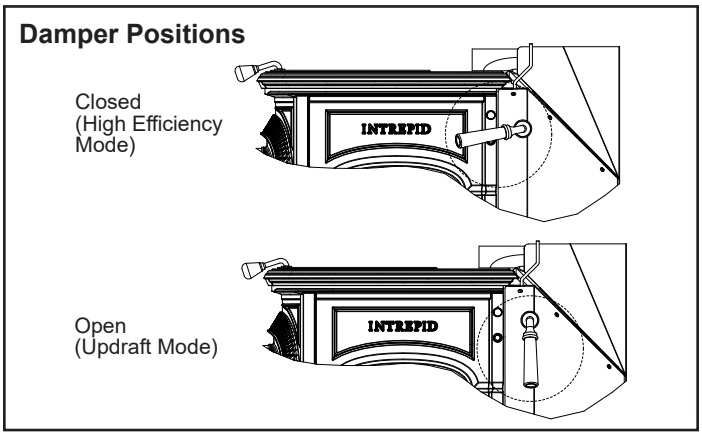

Figure 2.3 - The damper is either open or closed. There are no intermediate positions.

Note: Operation with the front doors open and the damper in the closed position are not permitted and could cause smoke spillage to the inside of the dwelling.

B. Conditioning Your Stove

Cast iron is extremely strong, but it can be broken with a sharp blow from a hammer or from the thermal shock of rapid and extreme temperature change.

The cast plates expand and contract with changes in temperature. When you first begin using your Intrepid FlexBurn®, minimize thermal stress by letting the plates adjust gradually during three or four initial break-in fires following Steps 1-3 below.

Wood Burning Operation

Burn only solid wood in the Intrepid FlexBurn® Wood Stove, and burn it directly on the grate. Do not elevate the fuel. Do not burn coal or other fuels. In the United States, it is against the law to operate this wood heater in a manner inconsistent with operating instructions in this manual.

The bypass damper must be open when starting a fire or when refueling.

Do not use chemicals or fluids to start the fire. Do not burn garbage. Never use flammable fluids such as gasoline, gasoline type lantern fuel, kerosene, charcoal lighter fluid, naptha, engine oil or similar liquids to start or "freshen up" a fire in this heater. Keep all such liquids well away from the heater while it is in use.

1. Open the stove bypass damper, and open the primary air control fully.
2. Place several sheets of crumpled newspaper in the stove. Place six or eight pieces of dry kindling split to a finger-width size on the paper. On the kindling, lay two or three larger sticks of split dry wood approximately 1-2" (25-51 mm) in diameter. (Figure 2.4)

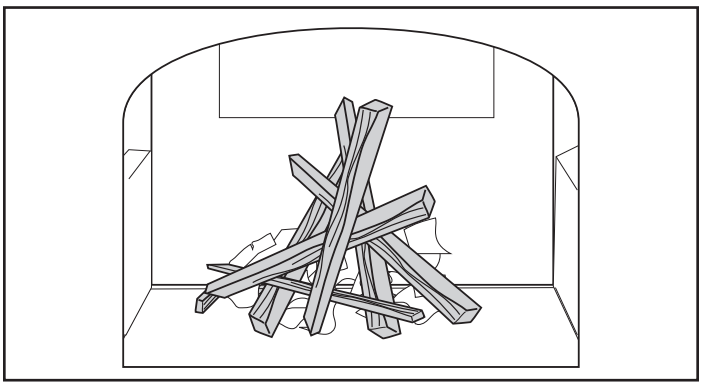

Figure 2.4 - Start the fire with newspaper and dry kindling.

3. Light the newspaper and close the door. Gradually build up the fire by adding a few 3-5" (80-120 mm) diameter pieces of split firewood. **If this is one of the first few "break-in" fires, let the fire burn brightly, and then let it die out.** During the break-in fires, do not let the stove get hotter than 500°F. (260°C) as measured on an optional stove-top thermometer. Adjust the air control lever as necessary to control the fire. Some odor from the stove's hot metal and the paint is normal for the first few fires.

NOTE: Some chimneys must be "primed," or warmed up, before they will draw sufficiently to start a fire. To correct this situation, roll up a couple pieces of newspaper, place them on top of the kindling and toward the back of the stove, light them, and close the doors. This will encourage the smoke to rise rapidly, making it easier to establish a good draft. Once the draft is established, open the front door and light the rest of the fuel from the bottom. Do not light the main bed of fuel until the chimney begins drawing, and repeat the procedure as often as necessary if the initial attempt is unsuccessful.

NOTE: Effectiveness of a "top-down" method to start a fire. Smoke emissions when starting a fire can be difficult to control because the stove is not yet heated to its optimum temperature. One method of reducing emissions during a cold start-up is the use of a "top-down" kindling procedure. In this, place larger pieces of kindling on the bottom of the kindling pile followed by smaller and smaller pieces as the pile is added to. Very finely split pieces should be on the top. Light the kindling pile with a match at the top and allow the kindling to burn downward into the larger pieces. This reduces smoke by slowly increasing the fire size without creating an air-starved condition.

4. **If your Intrepid FlexBurn® has been broken-in previously** using Steps 1-3, continue to build the fire gradually. Add larger wood with a diameter of 3-4" (75-100 mm). Continue adding split logs of this size to the briskly-burning fire until there is a glowing ember bed 2-3" (51-75 mm) deep. A good ember bed is necessary for proper functioning of the combustion system.
5. Close the damper when a sufficient ember bed is established and the griddle temperature reaches 450°F (230°C). This will force the smoke into the secondary combustion chamber where the smoke and gases will ignite if the stove is sufficiently hot. Even though it is possible for the fire to get quite hot within a few minutes after a fire is started, secondary combustion may stop or the fire may go out if the fire dies down immediately as a result of the damper being closed too early.
6. Adjust the air control for your desired heat output.

NOTE: Stove installations vary widely, and the operating guidance given here is only a starting point. This manual will explain in detail how the features of your installation may help or hinder good draft, and how you may need to vary your firing technique if your installation doesn't encourage a good draft.

High-Efficiency Wood Burning with the Catalytic Combustor
Your Intrepid FlexBurn® has an optional catalytic combustor available as an accessory. When operating the stove with the catalytic combustor, use the same operation instructions as outlined in the previous section.

While not required, operating your stove with the catalytic combustor installed creates optimum conditions for secondary combustion and will increase your efficiency up to 15% on low burn, making sure you get the most heat out of each load of wood.

The catalytic element is a ceramic “honeycomb” coated with the catalytic material. The element sits at the bottom of the secondary combustion chamber. Smoke, gases and particulates that are not fully combusted during the secondary combustion process pass through the catalyst, creating a tertiary burn. This results in higher efficiency and lower emissions.

The catalyst will initiate combustion of smoke and particulates at 500° - 600°F (260° - 315°C), half the temperature normally required for unaided secondary combustion. If you followed the startup operation steps in the previous section the stove will be sufficiently hot to allow the combustor to work. Once the combustor starts working, heat generated by burning the smoke will keep it working.

To determine whether the combustor is operating, refer to the temperature probe which shows the operating range of the catalytic combustor. This is located on the back of the stove and is viewed from the top. **NOTE:** It will take several minutes after closing the bypass damper for the temperature probe to fully adjust to the new temperature. If the probe indicator is below the operate catalyst range when the bypass damper is closed, add fuel or open the bypass damper to allow the fire to further build before engaging the catalyst again.

If the probe indicator is above the operate catalyst range, the catalytic combustor is running too hot and may be damaged. In many cases, decreasing the primary air can reduce the catalyst temperature and adding less wood with each loading can also help if overheating is persistent. Do not add wood to the stove if the probe reads above the operate catalyst range.

Avoid using a full load of very dry wood in the firebox, such as dry slab wood or wood with below 14% moisture content. This may result in continuous very high temperatures in the secondary combustion area and damage the combustor.

Never burn treated wood, garbage, solvents or trash. All of these may poison the catalyst and prevent it from operating properly. Never burn cardboard or loose paper except for kindling purposes. Never burn coal; doing so can produce soot or large flakes of char or fly ash that can coat the combustor and cause smoke to spill into the room. Coal smoke can also poison the catalyst so that it won’t operate properly.

C. Ways to Add Fuel

The Intrepid FlexBurn’s griddle lifts for convenient top-loading of logs, and is the easiest way to add fuel. (Figure 2.5)

However, the front doors open as well for adding an occasional log to the fire. The Intrepid FlexBurn® Wood Stove is not approved for operation with the front doors open.

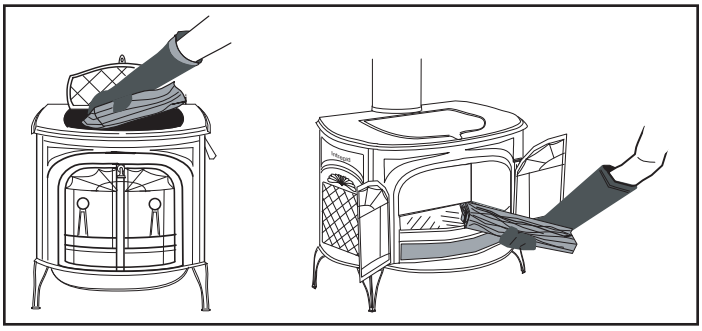

Figure 2.5 - Top loading is the best way to add fuel during regular use. Front loading is useful for kindling a fire.

To open the front doors, insert the handle into the door latch stub and turn it clockwise. (Figure 2.6)

To close them, always close the left door first. Turn the handle in the right door to the left and up (to the open position) and close it. Finally, push on the door as you turn the handle counterclockwise. The doors will draw in slightly, and the handle should offer some resistance as you turn it to the closed position.

To reduce the risk of breaking the glass, avoid striking the glass or slamming the doors.

When you are not using the door handle, store it in the holder behind the right front leg of the stove.

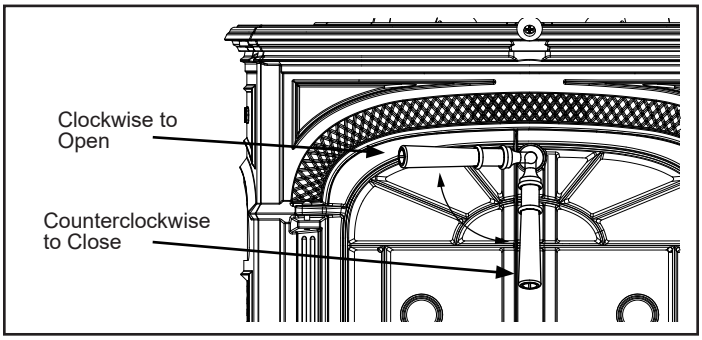

Figure 2.6 - To open the front doors, turn the handle clockwise.

WARNING

Fire Risk

- Do not leave the fire unattended when the door is unlatched
- Operate only with front doors and ash pan door closed.
- Unstable firewood could fall out of the firebox creating a fire hazard to your home.

WARNING

For safety and greatest efficiency, operate your stove only with all doors/griddles fully closed. The test standard for your stove when it is operated in this mode is UL 1482.

Refuel While the Embers Are Still Hot

When reloading, best results will be achieved if you first de-ash the stove by stirring the fuel bed to allow ash to fall through the grate into the ash pan.

Do not break the charcoal into very small pieces or pound or compress the charcoal bed. Check to make sure air holes at the bottom of the fireback are not blocked by ash or embers (blockage will reduce performance of the stove).

It is important that air can circulate through the charcoal bed. Larger pieces of charcoal allow more air to circulate under the wood, resulting in the fire reviving more quickly. (Figure 2.7)

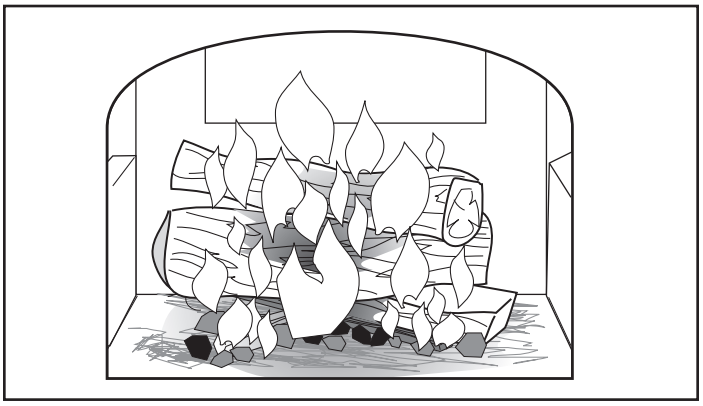

Figure 2.7 - Add full size logs after the ember bed is 3" (75mm) deep.

For safety when refueling, wear long-cuffed stove gloves to protect your hands and forearms. Add fuel while the stove still has plenty of glowing embers to re-kindle the fire and include some smaller pieces of wood in the new fuel load to help the stove regain its operating temperature quickly. Use this sequence as a guide to successful refueling:

1. Open the damper.
2. De-ash the stove as described above. Open the ash door and check the level of ash in the ash pan. Empty the pan if necessary and replace it in the stove. Close the ash door.
3. Open the griddle top and using a poker, push the remaining coals against the rear wall to cover the opening in the refractory. Load the wood (placing smaller pieces first) with the wood against the back wall. Close the griddle top.
4. Wait several minutes for the new wood to fully ignite if the stove top surface temperature is below 450°F (230°C).
5. Close the damper. And adjust the air control for the amount of heat your desire.

NOTE: If the remaining charcoal bed is relatively thick (2-3" / 51-75 mm) and if your fuel is well seasoned, it is possible to add fresh fuel (smaller pieces first) close the door and damper, and reset the primary air control for the desired heat output immediately. This optimizes both efficiency and emissions performance.

WARNING

DO NOT OPERATE THE STOVE WITH THE ASH DOOR OPEN. OPERATION WITH THE ASH DOOR OPEN CAN CAUSE AN OVER-FIRING CONDITION TO OCCUR. OVER-FIRING THE STOVE IS DANGEROUS AND CAN RESULT IN PROPERTY DAMAGE, INJURY OR LOSS OF LIFE.

Andirons Help Protect the Glass

Your stove has andirons to keep logs away from the glass panels. The andirons are essential to maintain clear fire viewing, and should be left in place. Since the andirons may slightly hinder refueling through the front doors, most stove owners will prefer the convenience of top loading through the griddle. Do not place fuel between the andirons and the doors.

Burn Only High-Quality Wood

The Intrepid FlexBurn® is designed to burn natural wood only; do not burn fuels other than that for which it was designed.

IMPORTANT: Do not burn any type of artificial or synthetic materials such as fire starter logs (containing wax) in this appliance. Never burn liquid-based fuels such as kerosene, gasoline or alcohol.

Burning any materials not allowed in these instructions, or over-firing the stove, may void the warranty.

You'll enjoy the best results when burning wood that has been adequately air-dried. The wood should be 14" - 16" (356-406 mm) in length. Avoid burning "green" wood that has not been properly seasoned. Do not burn construction materials; they often contain chemicals and metals that can damage the inside surfaces of the stove and pollute the air. Do not burn ocean driftwood; when it burns, the salt it contains will attack the cast iron.

The best hardwood fuels include oak, maple, beech, ash, and hickory that has been split, stacked, and air-dried outside under cover for at least one year.

If hardwood is not available, you can burn softwoods that include tamarack, yellow pine, white pine, Eastern red cedar, fir, and redwood. These should also be properly dried.

Store split wood under cover to keep it dry. Even for short-term storage, be sure to keep wood a safe distance from the stove and keep it out of the areas around the stove used for refueling and ash removal.

Surface Thermometer is a Valuable Guide to Operation
An optional surface thermometer tells you when to adjust the air control, and when to refuel. (Figure 2.8)

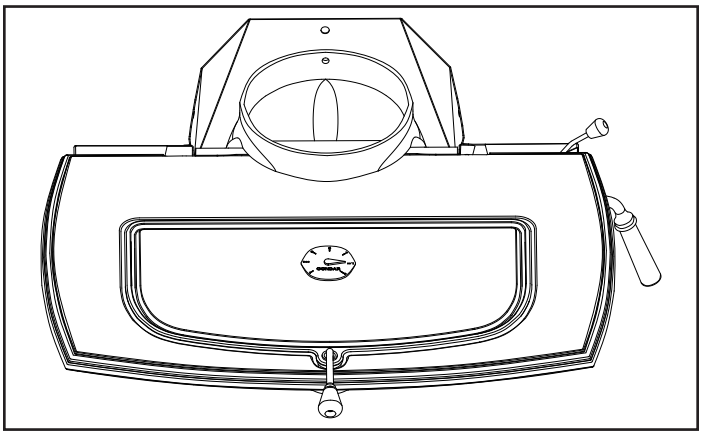

Figure 2.8 - Take temperature readings with a thermometer located in the middle of the griddle.

For example, when the thermometer registers at least 450°F (230°C) on the stove top after start-up you know the stove is hot enough and it may be time to close the damper if a sufficient ember bed has also been established. Note that the stove will warm up much sooner than the chimney, though; a warm chimney is the key to easy, effective stove operation. When thermometer readings drop below 350°F. (175°C) it's time to adjust the air control for a higher burn rate or to reload the stove. A temperature reading over 650°F (340°C) when the damper is closed is a sign to reduce the air supply to slow the burn rate.

Use the following temperature ranges as a guide:

- Readings in the 350°-500°F. (175°-260°C) range indicate low to medium heat output.
- 500°-600°F. (260°-315°C) readings indicate medium heat output.
- Readings of 600°-650°F. (315-340°C) indicate high heat output. Operating your Intrepid FlexBurn® continuously at griddle temperatures higher than 650° F (340°C) may damage the cast iron or enamel finish.

Use the Air Control Settings that Work Best for You
No single air control setting will fit every situation. Each installation will differ depending on the quality of the fuel, the amount of heat desired, and how long you wish the fire to burn; outdoor air temperature and pressure also affect draft.

The control setting also depends on your particular installation's "draft," or the force that moves air from the stove up through the chimney. Draft is affected by such things as the length, type, and location of the chimney, local geography, nearby obstructions, and other factors.

Too much draft may cause excessive temperatures in the Intrepid FlexBurn®, and could even damage the stove. On the other hand, too little draft can cause backpuffing into the room and/or the "plugging" of the chimney.

How do you know if your draft is excessively high or low? Symptoms of too much draft include an uncontrollable burn or a glowing-red stove part. Signs of weak draft are smoke leaking into the room through the stove or chimney connector joints or low heat output.

In some newer homes that are well-insulated and weather-tight, poor draft may result from an insufficient air supply in the house. In such instances, an open window near the stove on the windward side of the house can provide the combustion air supply needed.

Another option for getting more combustion air to the stove is to duct air directly from outside to the stove. In some areas provisions for outside combustion air are required in all new construction.

When first using the stove, keep track of the air control settings. You will quickly find that a specific setting will give you a fixed amount of heat. It may take a week or two to determine the amount of heat and the length of burn you should expect from various settings.

Most installations do not require a large amount of combustion air, especially if adequate draft is available. Do not for any reason attempt to increase the firing of your heater by altering the air control adjustment range outlined in these directions.

D. Ash Disposal

(Refer to the first page of the Operation section.)

DO NOT OPERATE THE STOVE WITH THE ASH DOOR OPEN. OPERATION WITH THE ASH DOOR OPEN CAN CAUSE AN OVER-FIRING CONDITION TO OCCUR. OVER-FIRING THE STOVE IS DANGEROUS AND CAN RESULT IN PROPERTY DAMAGE, INJURY OR LOSS OF LIFE.

Routine ash removal is important for ease of maintenance, and is important for the stove's durability. Remove ash before it reaches the top of the ash pan. Check the level at least once a day. Every few days, clear any ash from the outer edges of the firebox. Most of the ash will fall through the grate. Stir the ash with a shovel or poker so that it falls through the grate slots.

IMPORTANT: Check the level of ash in the ash pan before reloading the stove. If the ash level is close to the top edge of the pan, empty the pan according to this procedure:

- Open the damper.
- Open the griddle or front doors, and use a shovel or poker to stir excess ash through the ash slots in the grate down into the ash pan.
- Close the griddle or doors, and unlatch the ash door. (Figure 2.9) It will pivot, swinging the ash pan out of the stove.

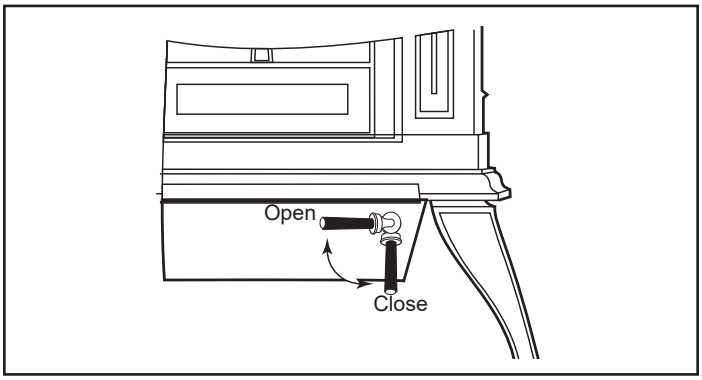

Figure 2.9- Turn the ashdoor handle clockwise to open and counterclockwise to close.

- Slide the cover onto the pan, making sure it is securely closed. (Figure 2.10)

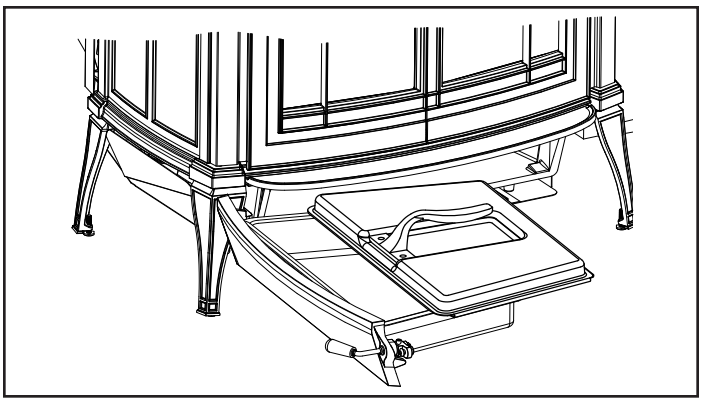

Figure 2.10 - Be sure the cover is securely attached before removing the ash pan.

- Lift to remove the ash pan, making sure to keep it level.
- To keep the cover from sliding off and to keep ash from falling on the floor, do not tilt the ash pan forward.
- If the stove is in operation, close the ash door while disposing of the ash.
- Properly dispose of the ash in a metal container with a tight-fitting lid. Store the container outdoors away from all combustible material.
- Return the ash pan to its original position in the stove, and close and latch the ash door.

⚠ WARNING

Do not operate the stove with the ash door open. This will result in over-firing, and could cause damage to the stove, void the warranty, or even lead to a house fire.

Empty the ash pan regularly, typically every one to three days. The frequency will vary depending on how you operate your Intrepid FlexBurn®: ash will accumulate faster at higher heat outputs.

Removed ash should be placed outdoors in a metal container with a tight-fitting lid. Keep the closed container of ash on a noncombustible floor or on the ground, well away from all combustible materials, pending final disposal. If the ash is disposed of by burial in soil or otherwise locally dispersed, it should be kept in the closed container until all cinders have thoroughly cooled.

⚠ CAUTION

Never use your household or shop vacuum cleaner to remove ash from the stove; always remove and dispose of the ash properly.

E. Opacity (Visible Smoke)

This is the measure of how cleanly your appliance is burning. Opacity is measured in percent; 100% opacity is when an object is totally obscured by the smoke column from a chimney, and 0% opacity means that no smoke column can be seen. As you become familiar with your appliance, you should periodically check the opacity. This will allow you to know how to burn as nearly smoke-free as possible (goal of 0% opacity).

⚠ WARNING



Fire Risk

- DO NOT BURN GARBAGE OR FLAMMABLE FLUIDS SUCH AS GASOLINE, NAPTHA OR ENGINE OIL.
- Do NOT burn treated wood or wood with salt (driftwood).
- May generate carbon monoxide if burn material other than wood.

May result in illness or possible death.

⚠ WARNING



Fire Risk

Keep combustible materials, gasoline and other flammable vapors and liquids clear of appliance.

- Combustible materials may ignite.
- Do NOT store flammable materials in the appliance's vicinity.
- DO NOT USE GASOLINE, LANTERN FUEL, KEROSENE, CHARCOAL LIGHTER FLUID OR SIMILAR LIQUIDS TO START OR "FRESHEN UP" A FIRE IN THIS Appliance.
- Keep all such liquids well away from the appliance while it is in use.

⚠ CAUTION

When burning your first fire, you will experience smoke and odor from the appliance resulting from the curing of paint and burning off of any oils remaining from manufacturing.

OPENWINDOWSDURINGINITIALBURNTODISSIPATE SMOKE AND ODORS!

- Odors may be irritating to sensitive individuals.
- Smoke detectors may activate.

F. Negative Pressure

⚠ WARNING



Asphyxiation Risk

- Negative pressure can cause spillage of combustion fumes, soot and carbon monoxide.
- Appliance needs to draft properly for safety.

Negative pressure results from the imbalance of air available for the appliance to operate properly. It can be strongest in lower levels of the house.

Causes include:

- Exhaust fans (kitchen, bath, etc.)
- Range hoods
- Combustion air requirements for furnaces, water appliances and other combustion appliances
- Clothes dryers
- Location of return-air vents to furnace or air conditioning
- Imbalances of the HVAC air handling system
- Upper level air leaks such as:
  - Recessed lighting
  - Attic hatch
  - Duct leaks

To minimize the effects of negative air pressure:

- Install outside air to the stove with the intake facing prevailing winds during the heating season
- Ensure adequate outdoor air for all combustion appliances and exhaust equipment
- Ensure furnace and air conditioning return vents are not located in the immediate vicinity of the appliance
- Avoid installing the appliance near doors, walkways or small isolated spaces
- Recessed lighting should be a "sealed can" design
- Attic hatches weather stripped or sealed
- Attic mounted duct work and air handler joints and seams taped or sealed

G. Important Information

Creosote is a by-product of slow wood-burning. It's an organic tar that can condense in the flue if it is present in the exhaust, slow-moving, and cools to less than 290°F (130°C). Condensed creosote is volatile, and can generate chimney fires if it gets hot enough. All the features that affect chimney draft also affect creosote condensation - so use whatever combination of installation features and operational steps that will encourage good draft and minimize creosote production.

Because letting the exhaust cool off and slow down is one of the keys to creosote accumulation, it makes sense to line a chimney to match the stove's outlet size, for safety reasons as well as performance. Canadian law requires a matching liner to serve any stove or insert vented through a fireplace chimney; in the US, the National Fire Protection Association (NFPA) recommends a chimney liner if the flue is more than three times bigger (in square area) than the outlet on the stove or insert. Some localities enforce the NFPA guidelines as part of their building codes.

Fuel: Even the best stove installation will not perform well with poor fuel. The best fuel is hardwood that has air-dried 12-18 months. Softwood burns, but not as long as hardwood. 'Green' wood contains a lot of moisture; it will burn, but some of the heat potential is used to boil the extra moisture from the wood. This reduces the amount of heat that reaches your home and can contribute to a creosote problem. There are moisture meters available for firewood; you can also judge your wood by its appearance and weight (Moisture content of 20% or less is best). If you get it green, lift a piece and get a sense of its weight; it can lose a third or more of its weight as it dries. Also look at the ends of a log; as it dries it shrinks and often cracks. The more weathered and cracked a piece is, the drier it is.

Dry wood burns readily with a good chimney draft. But with modern stoves, wood can be too dry and too volatile. Smoke and combustible gases can 'gas out' from the wood quickly and densely enough to overload the combustion system. If you hear a rumbling or roaring noise (like a propane torch) from the stove, that is a sign that the stove is over-firing.

Back-puffing results when the fire produces volatile gases faster than the chimney draft pulls them out of the firebox. The gases back up in the firebox until they are concentrated enough and hot enough to ignite. If your stove back-puffs, the stove needs to cool down. You should open the damper to let the smoke rise to the flue more quickly, allow more air into the firebox, avoid big loads of firewood and check that the wood moisture is not too low.

Draft Testing: An easy way to test your chimney draft is to close the stove's damper, wait a few minutes to let the airflow stabilize, then see whether you can vary the strength of the fire by swinging the air control open and closed. Results are not always instant; you may need to wait a few minutes for a change in the air control setting to have an effect on the fire. If there's no change, then the draft isn't strong enough yet to let you close the damper, and you'll need to open it for awhile longer and manage the fire with the air inlet until the draft strengthens. If you keep track of your burning habits and relate them to their effects on the stove's operation, you'll be rewarded with good performance and a safe system.

Conclusion: Wood-burning is an art rather than a science. Once the stove and chimney system are in place, you can only vary your technique, mostly your timing, to achieve good results. If you keep track of your burning habits and relate them to their effects on the stove's operation, you'll be rewarded with good performance and years of reliable heating.

3 Maintenance

Keep Your Stove Looking New and Working Its Best
Let the fire in the stove go out and allow the stove to cool completely before beginning any maintenance procedure.

Care of the Cast Iron Surface
An occasional dusting with a dry rag will keep the painted cast iron of your Intrepid FlexBurn® looking new.

The stove's paint can be touched up as needed. First, mask the areas, such as enameled parts, glass, or handles, around the spot to be painted. Clean the spot with a wire brush. Remove the griddle and set it aside. It is normal for the griddle to darken after use. You can clean it with a fine-bristle wire brush, or steel wool.

Then, touch up the stove with high temperature stove paint. Apply the paint sparingly; two light coats of paint are better than a single heavy one.

Care of the Porcelain Enamel Surface
Use a dry or slightly damp rag or soft brush to remove spills or stains. For difficult jobs that require a cleaning agent, use only a kitchen appliance cleaner or polish recommended for use on enamel surfaces.

If porcelain enamel becomes chipped or scratched during use, apply "enamel epoxy" to the damaged area and allow to dry. Once the epoxy has dried, sand the area to blend with surrounding area and apply appropriate color touch-up paint. Allow to dry completely before operating stove.

A. Cleaning & Replacement of the Glass

Most of the carbon deposits on the glass will burn off during hot fires.

However, the ash residue that accumulates on the glass surface should be removed regularly to prevent etching. To clean the glass, follow this procedure:

- Be sure the glass is completely cool. DO NOT clean glass while hot.
- Clean the glass with water or a cleaner made especially for this purpose. Do not use abrasive cleaners. Use cleaning agents sparingly and be sure to keep them off the outer surfaces of the stove.
- Rinse the glass thoroughly.
- Dry the glass completely.

Replace Broken Glass Immediately
Do not operate your stove if the glass in the doors is damaged.

If you need to replace the glass, use only the high temperature 5 mm ceramic glass supplied by Vermont Castings. Do not use substitutes.

Removing the Glass
1. Remove the right and left door assemblies by raising the door until the lower and upper hinge pin clears its holes. Place the doors face down on a padded work surface. Be especially careful with enameled doors.
2. Remove the screws that hold the glass retainer clips in place, and remove the clips.
3. Carefully lift the broken glass panel from the door.

Installing the Glass
Check the gasket around the window; it should be soft and resilient so that the glass will seal properly against the door. Replace the gasket if it has hardened or if it is compressed.

1. Center the glass on the gasket.
2. Secure the glass on both doors with the retainer clips. Tighten all screws. (Figure 3.1)
3. Replace the doors on the stove.
4. Open and close the doors to check that they fit and work properly. Adjust as necessary.

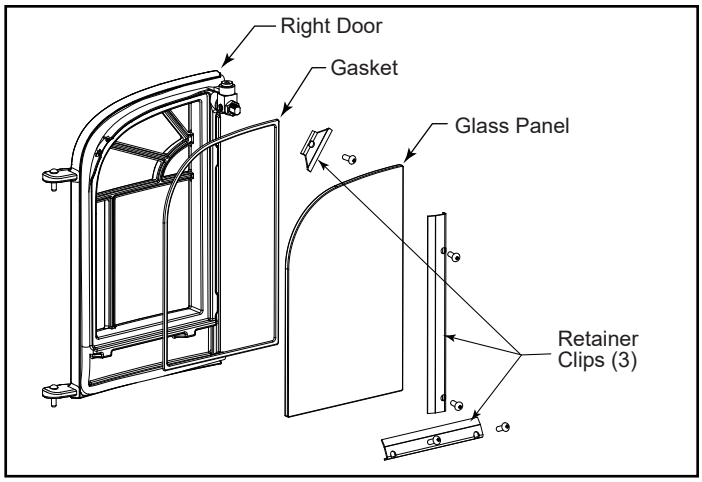

Figure 3.1 - Exploded view of the glass assembly for the right door.

B. Damper Adjustment (as Needed)

The tension on the Intrepid FlexBurn's damper is adjustable to compensate for compression of the gasket that seals the damper to the damper housing. To adjust the damper:

1. Remove the griddle. Loosen the lock nut at the center of the damper. (Figure 3.2)
2. Turn the pressure screw approximately one half turn clockwise with an Allen wrench provided with your stove.
3. Tighten the lock nut. Prevent the pressure screw from turning as you tighten the nut. Re-test the damper.

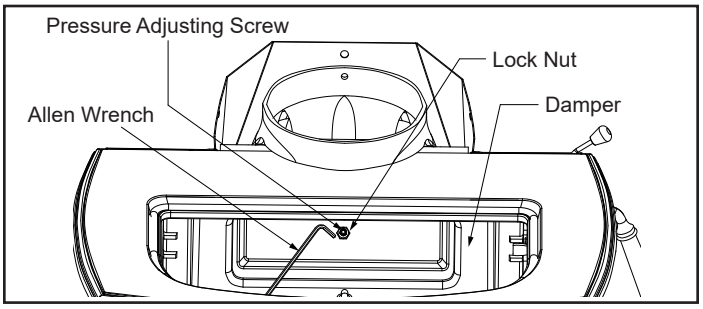

Figure 3.2 - Adjust the damper with the Allen wrench.

Tighten the Damper Handle as Needed

A handle on the left side of the stove controls the damper. The handle attaches to the damper rod with a set screw. Periodically check the set screw and tighten as necessary.

C. Door Latch Adjustment

The front door of the stove should close securely to prevent accidental opening and should close tightly to prevent air from leaking into the fire chamber. The door handle will be positioned vertically when the door is closed.

Over a period of time, the gasket around the door will compress and the latch may need adjustment. To adjust the handle, follow this procedure:

1. Loosen the set screw with a 1/8" Allen wrench.
2. Turn the lock nut clockwise with a 9/16" wrench. (Figure 3.3)
3. Once the desired tightness is achieved, tighten the set screw. (Figure 3.3)

Test the door seal. Close the door on a dollar bill and attempt to pull it free. If the bill is freed with little resistance, the gasket isn't snug enough at that spot. Continue to make small adjustments until the setting is right.

If additional adjusting of the latch does not enable the door to seal sufficiently in one area, try adjusting the gasket in that area. Pack more cement or a smaller diameter gasket into the channel beneath the gasket so the main gasket is raised and makes contact with the door frame. If this procedure doesn't solve the problem, replace the gasket. Instructions for gasket replacement are given later in this section.

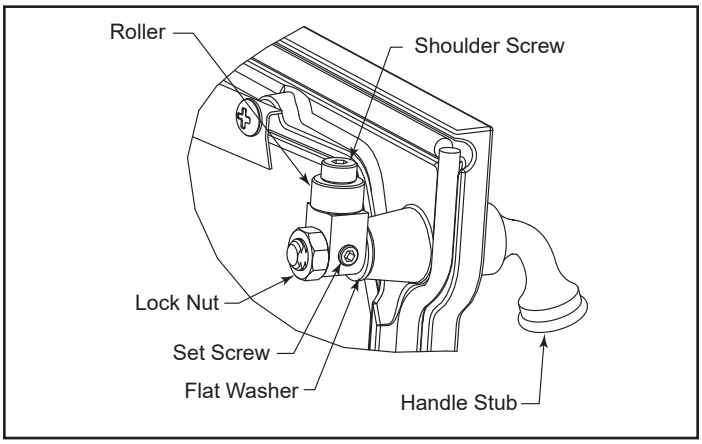

Figure 3.3 - Rotate pawl and/or remove flat washer to adjust latch.

D. Gasket Replacement (as Needed)

Your Intrepid FlexBurn® uses fiberglass rope gaskets to make a tight seal between some parts. With use, particularly on moving parts, gaskets can become brittle and compressed and can begin to lose their effectiveness. These will need periodic replacement.

The sizes of replaceable gasket are listed below, along with their applications.

Gasket Diameter.....And the Parts it Seals

5/16" The griddle to the stove top (wire reinforced gasket)

1/4" Outside damper housing.

3/8" Inside damper housing opening.

5/16" The front doors to the stove front; and the doors to each other.

3/8" The ash door to the front of the bottom panel

3/16" The outer glass panes to the door

If you need to change a gasket, first obtain an appropriate replacement from your Vermont Castings' Authorized Dealer.

Wait until the fire is out and the stove has cooled. Be sure to follow the standard safety procedure for working with dusty materials: wear safety goggles and a dust mask.

The procedure for replacing gaskets is the same, regardless of the gasket location. Follow these steps:

1. Remove the existing gasket by grasping an end and pulling firmly. (Figure 3.4)

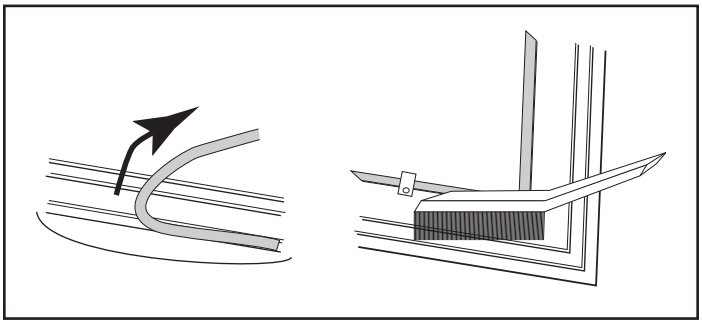

Figure 3.4 - Remove gasket then clean channel with wire brush.

2. Use a wire brush or the tip of a screwdriver to clean the channel of any remaining cement or bits of gasket. Remove stubborn deposits of cement with a cold chisel if necessary. (Figure 3.4)
3. Determine the correct length of the appropriate-sized gasket by laying it out in the channel. Allow an extra 1-2" (25-50 mm), and mark the spot to be cut.
4. Remove the gasket from the channel, place it on a wood cutting surface, and cut it at the marked spot with a utility knife.

Twist the ends slightly to keep the gasket from unraveling.

5. Lay an unbroken 1/8" (3 mm) bead of silicone or cement in the newly-cleaned channel. (Figure 3.5)

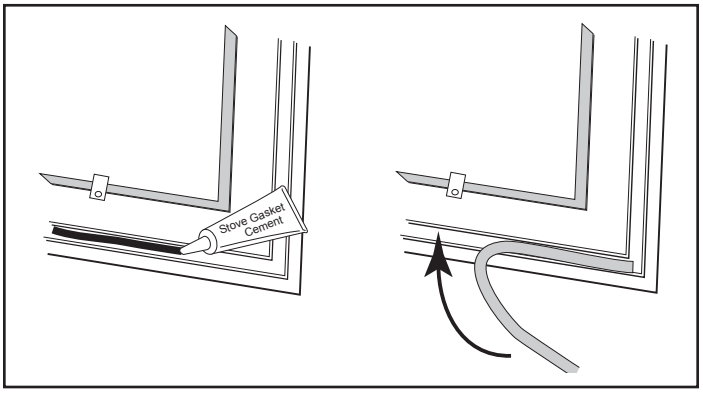

Figure 3.5 - Lay a bead of gasket silicone or cement then press gasket in place.

6. Starting at one end, press the gasket into the channel. (Figure 3.5) Ensure a good joint where the gasket meets before trimming any excess. Do not overlap the gasket ends or leave ends with ragged edges.
7. Press the gasketed part firmly against its normal mating surface to seat the gasket evenly in its channel. Close and latch the door to do this, or tap other parts with the rubber mallet (or hammer/block of wood).
8. Clean any excess cement from around the channel, then let the cement that holds the new gasket dry thoroughly.
9. The stove's doors may need adjustment after you have regasketed them. Initially, it may require loosening the latch to accommodate the new gasket; after a few weeks, it may need tightening to compensate for compression of the new gasket.

All Gasketed Construction Gaskets

Other gaskets form seals between all other non-moving parts, but these are not subject to the same wear and deterioration as gaskets on moving parts. It is unlikely that you will ever need to replace these gaskets unless the involved parts are disassembled and then put back together. If this is the case, the job should be done only by a qualified service technician. Refer to the service parts list for gasket replacement.

E. The Chimney System

Your Intrepid FlexBurn® is designed to reduce creosote build-up significantly. However, regular chimney inspection and maintenance must still be performed. For safety, good stove performance, and to protect your chimney and chimney connector, inspect your chimney and chimney connector on a regular schedule. Clean the system if necessary. Failure to keep the chimney and connector system clean can result in a serious chimney fire.

⚠ WARNING

Inspect and Clean Chimney Frequently – Under certain conditions of use, creosote buildup may occur rapidly.

When wood is burned slowly, it produces tar, organic vapors and moisture that combine to form creosote. The creosote vapors condense in the relatively cool chimney flue of a slow-burning fire. As a result, creosote residue accumulates on the flue lining. When ignited, this creosote makes an extremely hot fire within the flue system that can damage the chimney and overheat adjacent combustible material. If a significant layer of creosote has accumulated —1/8" (3 mm) or more — it should be removed to reduce the risk of a chimney fire.

You can never be too safe. Contact your local fire authority for information on what to do in the event of a chimney fire, and have a clearly understood plan on how to handle one.

If you do experience a chimney fire, act promptly to:

- Close the damper and air control lever.
- Get everyone out of the house.
- Call the Fire Department.

Inspect the system every two weeks during the heating season as part of a regular maintenance schedule. To inspect the chimney, let the stove cool completely. Then, using a mirror and a strong light, sight up through the flue collar into the chimney flue. If you cannot inspect the flue system in this fashion, the stove must be disconnected to provide better viewing access.

Clean the chimney using a brush the same size and shape as the flue liner. Flexible fiberglass rods are used to run the brush up and down the liner, causing any deposits to fall to the bottom of the chimney where they can be removed through the clean-out door.

Clean the chimney connector by disconnecting the sections, taking them outside, and removing any deposits with a stiff wire brush. Reinstall the connector sections after cleaning, being sure to secure the joints between individual sections with sheet metal screws.

If you cannot inspect or clean the chimney yourself, contact your local Vermont Castings dealer or a professional chimney sweep.

Maintenance Schedule - The Stove

Daily:

- Clear any ash build-up from around the air holes and combustion flow path in the refractory fireback.
- Ashes should be removed before they reach the top of the ash pan. Check accumulation at least once a day.
- Keep the area around the stove clear of any combustible materials such as wood, furniture or clothing.

Two Months:

- Check door handle to be sure it is working properly. Gasketing becomes compressed after a period of time. Adjust handle tightness if necessary.
- Check leg bolts and heat shield screws; tighten if necessary.
- **If installed:** Inspect the combustor for fly ash accumulation and physical damage. Clean the combustor as needed.

Annual Spring Cleaning:

- Check gasketing for wear, and replace if necessary.
- Remove ashes from the ash pan and replace with a moisture absorbing material (such as kitty litter) to keep the interior of the stove dry.
- Clean the dust from the inner sides of bottom, rear or pipe heat shields if your stove is equipped with them. Clean surfaces are better heat reflectors than dirty surfaces.
- Touch up the black paint.
- Inspect for and remove ash build-up behind the combustion package. This should be done in conjunction with annual cleaning of the chimney connector. Inspect the passage behind the combustion package (a mirror will be helpful) and vacuum away ash using a flexible vacuum hose inserted in the passage. (Figure 3.6)

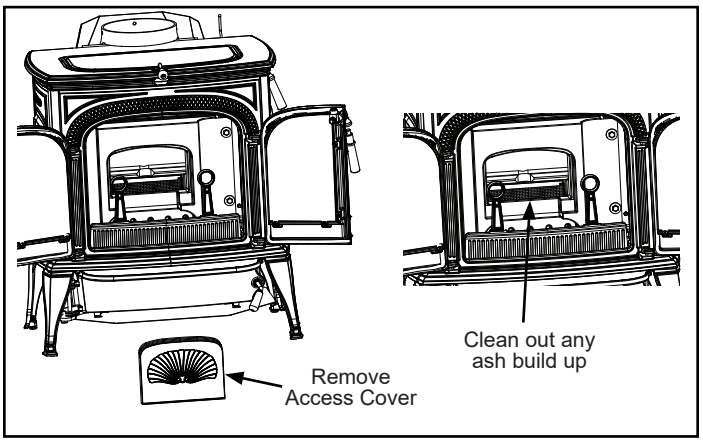

Figure 3.6 - Inspect and clean out ash accumulation behind the combustion system.

The Chimney Connector

Two Weeks

- Inspect the chimney connector and chimney. Clean if necessary.

Two Months:

- Inspect the chimney and chimney connector. Pay particular attention to the horizontal runs of chimney connector, and the elbows. Clean the system if necessary.

Annual Spring Cleaning:

- Disassemble the chimney connector and take it outdoors for inspection and cleaning. Replace weak sections of connector.
- Inspect the chimney for signs of deterioration. Repairs to a masonry chimney should be made by a professional mason. Replace damaged sections of prefabricated chimney. Your local Vermont Castings dealer or a chimney sweep can help determine when replacement is necessary.
- Thoroughly clean the chimney.

F. The Catalytic Element (Optional)

CAUTION

BURN UNTREATED WOOD ONLY. OTHER MATERIALS SUCH AS WOOD PRESERVATIVES, METALS, FOILS, COAL, PLASTIC, GARBAGE, SULPHUR, OR OIL, MAY DAMAGE THE CATALYST.

The Intrepid Flexburn is designed to burn equally well with or without a catalytic combustor (Part No. SRV70007430), however higher efficiencies will be achieved when operating with the catalyst. The following section only applies if the catalytic performance pack (Part No. 0003260) has been purchased and installed. The Intrepid Flexburn is designed and certified to function with or without a catalyst. In the event the combustor becomes non-functioning the combustor can either be replaced or removed completely.

If a non-active catalyst is left installed in the unit, it will burn sluggishly and produce noticeable smoke at the outlet of the venting system. The simplest situation in that case is to remove the deactivated catalyst and operate the unit as non-catalytic. The catalyst can then be replaced as time allows without producing a smoky burn or low heat output.

In the United States it is against the law to operate this wood heater in a manner inconsistent with the operating instructions in this manual.

Under normal operating conditions, the catalytic combustor should remain active for five to seven years (depending on the amount of wood burned). However, it is important to monitor the combustor periodically to ensure that it is functioning properly, as well as to determine when it needs to be replaced. A non-functioning combustor will result in a loss of heating efficiency, and an increase in creosote and emissions.

When to Suspect a Combustor Problem

The best way to evaluate the performance of your Intrepid FlexBurn's combustor is to observe the amount of smoke leaving the chimney — both when the combustor has "lighted-off" and when it has not. Follow these steps:

- With a fire going and the combustor properly activated and the damper closed to route smoke through it as described in the Operation Section, go outside and observe the smoke leaving the chimney.
- Then, open the stove damper and once again check the smoke leaving the chimney.

You should see significantly more smoke when the stove damper is open and exhaust does not pass through the combustor. However, be careful not to confuse smoke with steam from wet wood. Steam dissipates in the air quickly; smoke does not. Remember that a hot stove with a 2"-3" established coal bed is required for catalytic combustion to occur.

If this test indicates a problem, consider other possible factors as well, such as the weather or a change in the quality of your fuel. In warm weather, draft is weaker than it is in colder winter weather, and fires can burn sluggishly. Small, hot fires are a good solution under these conditions.

NOTE

Burning "green" (insufficiently seasoned) wood will result in poorer performance than burning properly seasoned fuel. Reloading with green wood can also thermal shock the catalyst, resulting in cracking, or the eventual fallout, of the ceramic honeycomb substrate. You may have to run your stove hotter (more air) to achieve acceptable performance using green or wet wood.

Also, consider any changes in your operating routine.

Once you have ruled out any other possible causes for a decline in performance, inspect and clean the combustor if necessary. Be sure to protect any surface you use for setting the stove parts aside.

Inspecting the Combustor

Remove access door and inner fireback. Remove the catalytic combustor by lifting up and pulling towards you. (Figure 3.7)

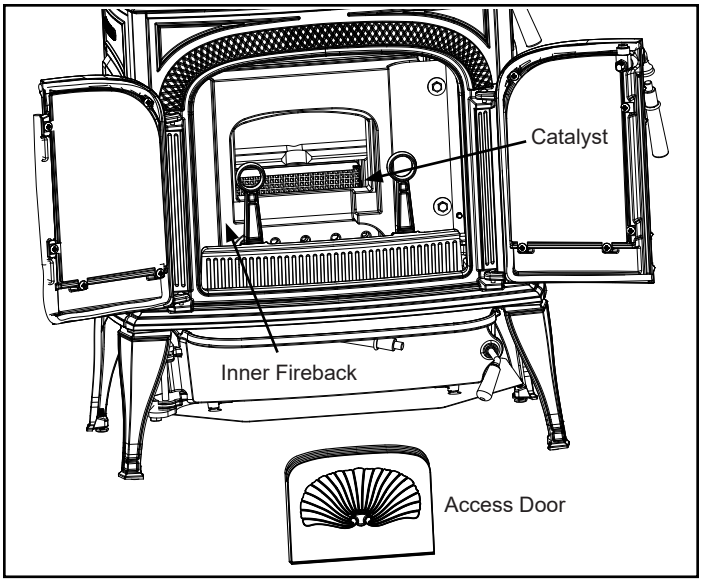

Figure 3.7 - Inspect the catalytic combustor.

Cleaning the Combustor

1. Check the combustors honeycomb-like catalyst for a buildup of fly ash. If any is evident, take the catalyst outside and clean it by blowing air gently through it. Do not push anything through the honeycomb; the combustor should be cleaned by forcing air through the combustor to remove fly ash using a vacuum or can of compressed air.
2. Inspect the catalyst for damage or degradation. Although small hairline cracks will not affect performance, the cataylist should be essentially intact. If the cataylist is broken in pieces or has sections missing, it should be removed or replaced. Call your local Vermont Castings Authorized Dealer for a replacement cataylist.
3. If the cataylist is in good condition and clean, re-install it in the stove and replace the refractory access door.

4 Troubleshooting Guide

With proper installation, operation, and maintenance your wood appliance will provide years of trouble-free service. If you do experience a problem, this troubleshooting guide will assist you or a qualified service person in the diagnosis of a problem and the corrective action to be taken.

Start Fire Problems	Possible Cause	Solution
• Can not get fire started • Excessive smoke spillage • Burns too slowly • Not enough heat output	Not enough kindling/paper or no kindling/paper	Use dry kindling, more paper. Arrange kindling & wood for air movement.
	Not enough air for fire to ignite	Check for restricted termination cap
		Check for blockage of outside air kit (if installed).
		Check for flue blockage.
		Pre-warm flue before starting fire (refer to Building a Fire Section).
		Check for adequate vent height (refer to Chimney Height Section).
		Refer to Negative Pressure section
	Wood condition is too wet, too large	Use dry, seasoned wood (refer to Seasoned Wood Section).
	Bed of coals not established before adding wood	Start with paper & kindling to establish bed of coals (refer to Building a Fire Section).
	Flue blockage such as birds' nests or leaves in termination cap	Have chimney inspected for creosote and cleaned by a certified chimney sweep.
	Down draft or negative pressure Competition with exhaust devices	Do not use exhaust fans during start-up (refer to Negative Pressure Section).
Fire burns too fast	Extremely dry or soft wood	Mix in hardwood.
		Mix in larger pieces of wood after fire is established.
	Overdrafting	Check for correct vent height; too much vertical height creates overdrafting.
		Check location of vent termination (refer to Chimney Termination Requirement Section).
Low Heat Output	Coal Bed too small	Open damper. Establish deeper coal bed and move coals to the rear of the firebox.
Excessive Coal Bed	Operating on high for extended periods	Reduce burn rate and allow coals to burn down before reloading.

Contact your dealer for additional information regarding operation and troubleshooting.
Visit www.vermontcastings.com to locate a dealer.

5 Reference Materials

A. Service & Maintenance Log

Date of Service	Performed By	Description of Service

B. Service Parts List

VERMONT CASTINGS™ **Service Parts**

Intrepid Flexburn

Beginning Manufacturing Date: June 2018
Ending Manufacturing Date: Active

0002115 (Classic Black)
0002116 (Biscuit) - Ending Manufacturing Date: Feb 2022
0002117 (Majolica Brown)
0002118 (Bordeaux)
0002119 (Twilight)
0002115T (Classic Black w/Transition Doors)

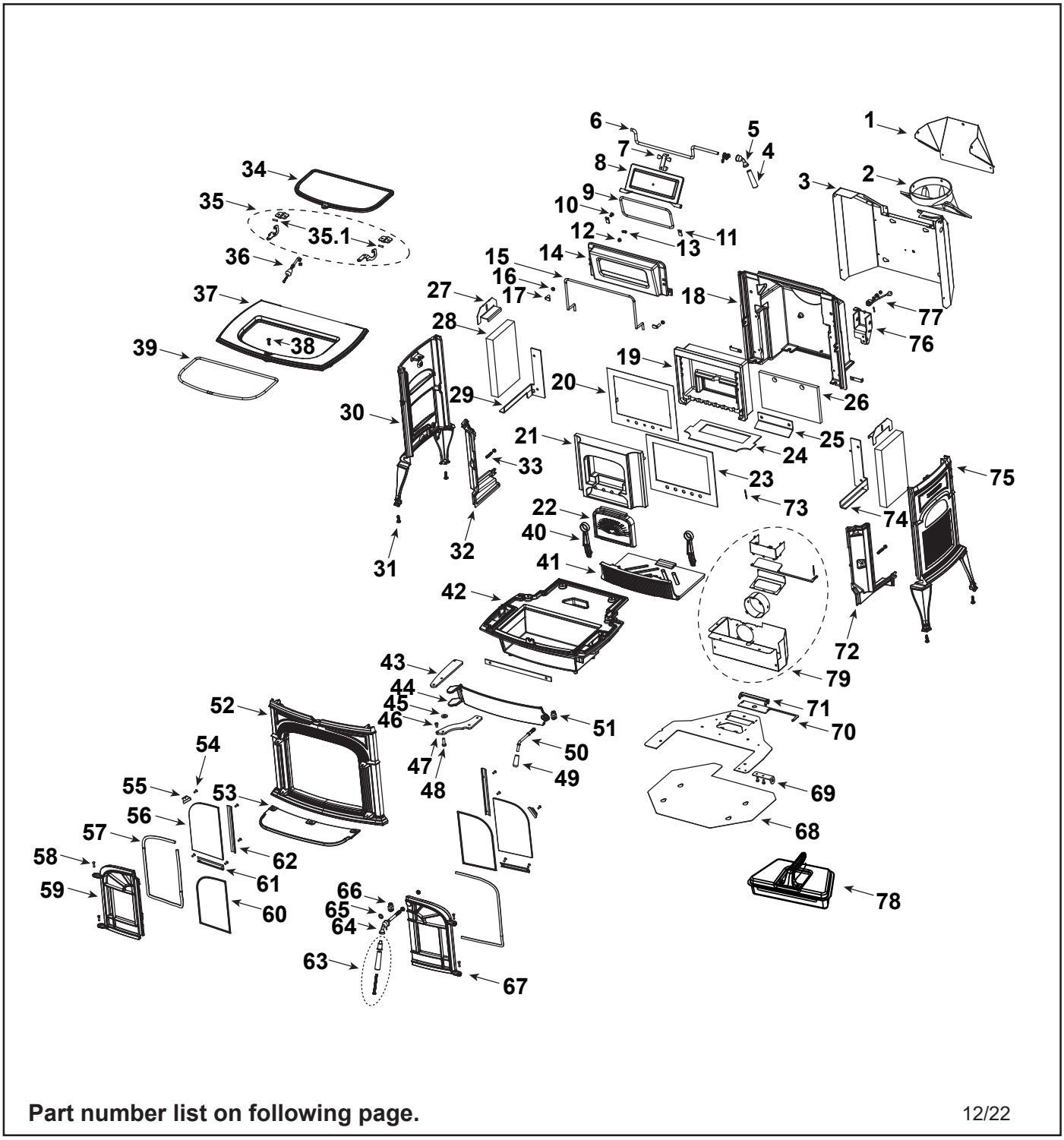

Part number list on following page.

12/22

IMPORTANT: THIS IS DATED INFORMATION. Parts must be ordered from a dealer or distributor. **Hearth and Home Technologies does not sell directly to consumers**. Provide model number and serial number when requesting service parts from your dealer or distributor.



ITEM	DESCRIPTION	COMMENTS	PART NUMBER	Stocked at Depot
1	Heatshield Flue	30007358A		**Y**
2	Flue Collar	Classic Black	1306561A	
		Biscuit	30003181A	
		Majolica Brown	1306561-31A	
		Bordeaux	30006713A	
		Twilight	1306561-30A	
	Flue Collar Gasket	15 Ft	1-00-30002422	**Y**
3	Shroud Rear		30007428A	
4	Damper Handle	Wood	1600664	**Y**
5	Damper Steel Handle		30002720A	
6	Damper Rod		1602523	
7	Damper Adjuster		30007407A	**Y**
8	Damper		30007388A	**Y**
9	Gasket, Fiberglass 3/8 Black	15 Ft	1-00-30002422	**Y**
10	HCS 1/4-20 x 3/8 Z 5-BIN	Pkg of 10	1201337-10	
11	Damper Tab (Qty 2 req)	Pkg of 10	1601488-10	
12	FHN 1/4-20 Z 5-BIN	Pkg of 10	1203210-10	
13	SSS CP 1/4-20 x 1-BIN	Pkg of 10	1200436-10	
14	Damper Housing		30007293A	**Y**
15	Gasket, Fiberglass 1/4 RD PSA	15 Ft	1-00-2312	**Y**
16	FHN 3/8-16 Z-BIN (Qty 2 req)	Pkg of 10	1203161-10	
17	Weld SCR 3/8-16x1, Black (Qty 2 req)	Pkg of 10	1201583-10	
18	Back		30007292A	
	Gasket, Fiberglass 3/8 Black	15 Ft	1-00-30002422	**Y**
19	Refractory Engine		30007299A	**Y**
20	Retainer SS/Gasket		30007305A	**Y**
21	Refractory Fireback		30007300A	**Y**
22	Refractory Cover		30007301A	**Y**
23	Gasket, 1/8 Ceramic Paper		30007304A	**Y**
24	Refractory Gasket		30007381A	**Y**
25	Deflector		30007390A	
26	Insulation Rear		30007367A	
27	Refractory Upper Bracket	Qty 2 req	30007353A	**Y**
28	Refractory Side	Qty 2 req	30007302A	**Y**
29	Refractory Lower LT Bracket		30007307A	**Y**

Additional service part numbers appear on following page.

Beginning Manufacturing Date: June 2018
Ending Manufacturing Date: Active

IMPORTANT: THIS IS DATED INFORMATION. Parts must be ordered from a dealer or distributor. **Hearth and Home Technologies does not sell directly to consumers**. Provide model number and serial number when requesting service parts from your dealer or distributor.



ITEM	DESCRIPTION	COMMENTS	PART NUMBER	Stocked at Depot
30	End Left	Classic Black	30007289A	
		Biscuit	30007289-32A	
		Majolica Brown	30007289-31A	
		Bordeaux	30007289-33A	
		Twilight	30007289-30A	
31	LVLR Bolt - 1/4-20x1 Z-BIN (Qty 4 req)	Pkg of 10	1201745-10	
32	Air Manifold, Left		30007295A	
	Gasket, Fiberglass 3/8 Black	15 Ft	1-00-30002422	**Y**
33	Stud 1/4-20 x 1-1/2 - BIN	Qty 2 req	1204214	
	FHN 1/4-20 Z 5-BIN	Pkg of 10	1203210-10	
34	Griddle		30007309A	
35	Griddle Brackets(Contains brackets, retainers, pins, & bolts)	Right & Left	SRV3000731	
35.1	Griddle Hinge Dowel Pin 3/16 x 3/4	Qty 2 req	30007368	
36	Griddle Handle Assembly		30007426A	**Y**
37	Top	Classic Black	30007287A	
		Biscuit	30007287-32A	
		Majolica Brown	30007287-31A	
		Bordeaux	30007287-33A	
		Twilight	30007287-30A	
	Gasket, 7/16 PSA	15 Ft	1-00-30001910	**Y**
38	CS, SOC FLHD 1/4-20x3/4 - BIN	Pkg of 10	30001787-10	
39	Griddle Gasket	10 Ft	1-00-1203668	**Y**
40	Andiron	Qty 2 req	30007308 A	**Y**
41	Grate Bottom		30007297	**Y**
42	Bottom		30007288A	
	Gasket, Fiberglass 3/8 Black	15 Ft	1-00-30002422	**Y**
	3/16 Inch Round Black LD W/PSA	10 Ft	1-00-1186258229	**Y**
43	Hinge Bracket, Upper		30007386A	
44	Ashdoor		30007318A	
	Gasket, Ashdoor 3/8 Fiberglass	15 Ft	1-00-1203589	**Y**
45	10mm Flat Washer	Pkg of 10	1202560-10	
46	SHCS 1/4-20 x 3/8	Pkg of 10	30001794-10	
47	Hinge Bracket, Lower		30007387A	
48	HCS 5/16-18 x 1 Z-5	Pkg of 2	1-00-2473	
49	Handle, Wood, Ashdoor		1600663	**Y**
50	Shaft, Handle		30005301	
51	Pawl Assembly	Qty 2 req	30005157	**Y**
	Nut Jam 3/8-16 Top Lock - BIN	Pkg of 10	1203290-10	

Additional service part numbers appear on following page.

Beginning Manufacturing Date: June 2018
Ending Manufacturing Date: Active

IMPORTANT: THIS IS DATED INFORMATION. Parts must be ordered from a dealer or distributor. **Hearth and Home Technologies does not sell directly to consumers**. Provide model number and serial number when requesting service parts from your dealer or distributor.



ITEM	DESCRIPTION	COMMENTS	PART NUMBER	Stocked at Depot
52	Front	Classic Black	30007291A	
		Biscuit	30007291-32A	
		Majolica Brown	30007291-31A	
		Bordeaux	30007291-33A	
		Twilight	30007291-30A	
	Gasket, 1/4 Fiberglass	10 Ft	834-1460	**Y**
53	Ashlip	Classic Black	30007317A	
		Biscuit	30007317-32A	
		Majolica Brown	30007317-31A	
		Bordeaux	30007317-33A	
		Twilight	30007317-30A	
54	TRS HD PH 10-24 x 1/2 Z-BIN	Pkg of 10	1200998-10	
55	Glass Clip Corner	Qty 2 req	30007385A	
56	Glass, Left and Right	Qty 2 req	30007394A	**Y**
57	Door Gasket, 5/16-MED	15 Ft	1-00-1203588	**Y**
58	Door Pins	Qty 4 req	1600535	**Y**
59	Door, Left	Classic Black	30007313A	
		Biscuit	30007313-32A	
		Majolica Brown	30007313-31A	
		Bordeaux	30007313-33A	
		Twilight	30007313-30A	
	Door, Left Tans		30007351A	
60	3/16 Inch Round Black LD W/PSA (Glass Gasket)	10 FT	1-00-1186258229	**Y**
61	Glass Clip Bottom	Qty 2 req	30007383A	
62	Glass Clip Side	Qty 2 req	30007384A	
63	Wood Handle w/Lifter		30004175K	**Y**
	Damper Handle Screw	Pkg of 10	1201310-10	**Y**
	Damper Handle, Wood		1600664	**Y**
	Insert Lifter - BIN		30002714	**Y**
64	Front Handle w/Shaft		30007380	**Y**
65	Spring Washer .70IDX BIN	Pkg of 10	63D0069-10	
66	Pawl Assembly		30005157	**Y**
	Nut Jam 3/8-16 Top Lock - BIN	Pkg of 10	1203290-10	
67	Door, Right	Classic Black	30007312A	
		Biscuit	30007312-32A	
		Majolica Brown	30007312-31A	
		Bordeaux	30007312-33A	
		Twilight	30007312-30A	

Additional service part numbers appear on following page.

Beginning Manufacturing Date: June 2018
Ending Manufacturing Date: Active

IMPORTANT: THIS IS DATED INFORMATION. Parts must be ordered from a dealer or distributor. **Hearth and Home Technologies does not sell directly to consumers**. Provide model number and serial number when requesting service parts from your dealer or distributor.



ITEM	DESCRIPTION	COMMENTS	PART NUMBER	Stocked at Depot
	Door, Right Trans		30007350A	
68	Bottom Heat Shield		30007346A	
69	Handle Bracket		30007391A	
	PHM 8 x 12 Black	Pkg of 10	3-30-5000-10	
70	Air Flap INT FB		30007341A	
71	Bracket, Air Flap INT FB		30007342A	
72	Air Manifold, Right		30007296A	
	Gasket, Fiberglass 3/8 Black	15 Ft	1-00-30002422	**Y**
73	Ball Chain #6-3.18mm		30007431A	**Y**
	Ball Chain Fitting	Pkg of 32	SRV2-00-950200	
74	Refractory Lower RT Bracket		30007352A	**Y**
75	End, Right	Classic Black	30007290A	
		Biscuit	30007290-32A	
		Majolica Brown	30007290-31A	
		Bordeaux	30007290-33A	
		Twilight	30007290-30A	
76	Thermostat Cover		30007314A	
77	Thermostat Coil and Shaft Assembly		30007429A	**Y**
	Handle, Thermostat, Wood		30007401	**Y**
78	Ashpan Assembly		30007339	
	Catalytic Performance Pack(Includes Catalyst, Temp Probe, Temp Bracket & Instuctions)		0003260	
	Temp Probe		30007275	
	Catalyst		SRV30007430	
79	Appliance Air Intake		Reference Only	
	Warming Shelf Kit	Classic Black	0000098	
		Biscuit	0001376	
		Majolica Brown	0001410	
		Bordeaux	0001380	
		Twilight	0001408	
	Shelf	Classic Black	1302254A	
		Biscuit	SRV30003214	
		Majolica Brown	SRV1302254-31	
		Bordeaux	SRV30006720	
		Twilight	SRV1302254-30	
	Shelf Bracket	Classic Black	1302272A	
		Biscuit	SRV30003215	
		Majolica Brown	SRV1302272-31	
		Bordeaux	SRV30006721	
		Twilight	SRV1302272-30	
	Outside Air Kit		1-10-09542	
	Finish Bag		SRV30007393	

C. Contact Information

VERMONT CASTINGS

CONTACT INFORMATION

Hearth & Home Technologies
352 Mountain House Road
Halifax, PA 17032

Please contact your Vermont Castings dealer with any questions or concerns.

For the number of your nearest Vermont Castings dealer

log onto www.vermontcastings.com

CAUTION

DO NOT DISCARD THIS MANUAL



- Important operating and maintenance instructions included.
- Read, understand and follow these instructions for safe installation and operation.
- Leave this manual with party responsible for use and operation.

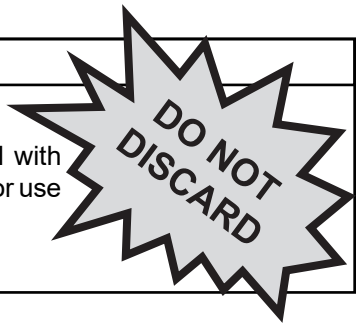

We recommend that you record the following pertinent information for your heating appliance.

Date purchased/installed: _____

Serial Number: _____ Location on appliance: _____

Dealership purchased from: _____ Dealer phone: _____

Notes: _____

_____

_____

_____

This product may be covered by one or more of the following patents: (United States) 5341794, 5263471, 6688302, 7216645, 7047962 or other U.S. and foreign patents pending.

HEARTH & HOME technologies®

Section 6

Firebox Volume Calculation

PART No: 000-2115

ITEM	QTY	PART No	DESCRIPTION	REMARK

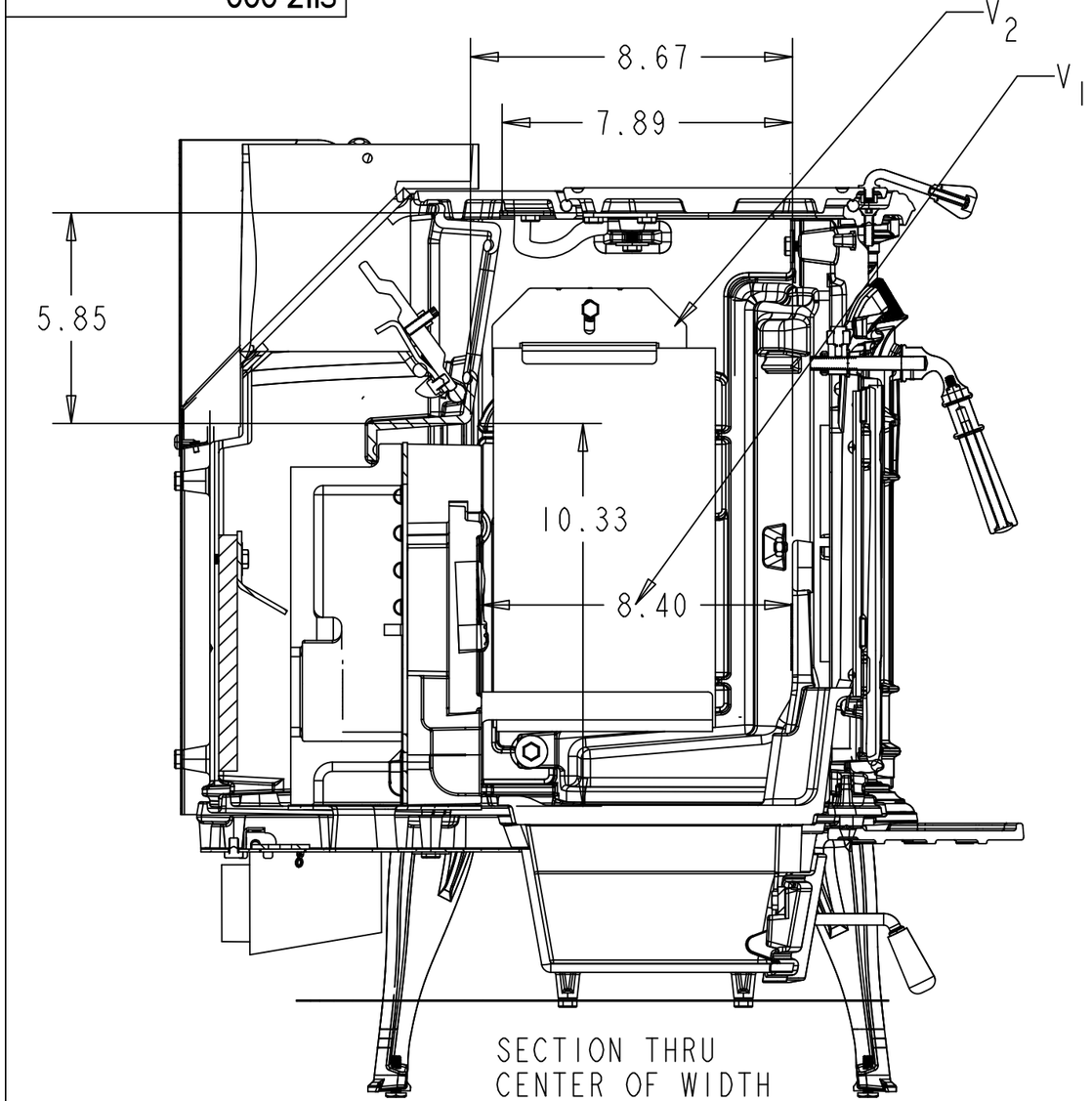

SECTION THRU
CENTER OF WIDTH

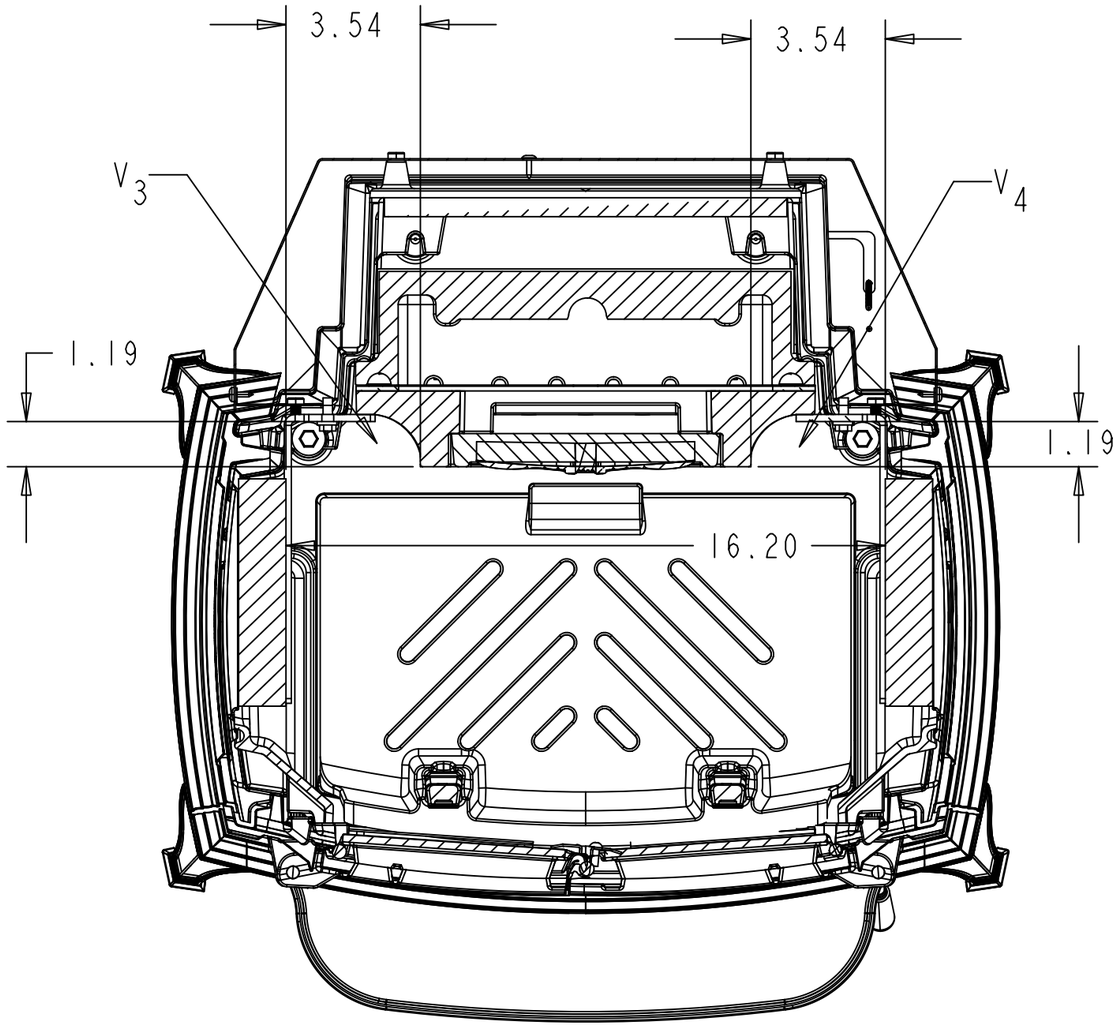

SECTION THRU
CENTER OF HEIGHT

CERTIFICATION VOLUME CALCULATION:

V_1 = 10.33" X 16.20" X 8.40" = .81ft^3

V_2 = ((8.67" + 7.89")/2) X 5.85" X 16.20" = .45 ft^3

V_3 = 1.19" X 3.54" X 10.33" = .025 ft^3

V_4 = 1.19" X 3.54" X 10.33" = .025 ft^3

$VF = V_1 + V_2 + V_3 + V_4$ = .81ft^3 + .45ft^3 + .025ft^3 + .025ft^3 = 1.31ft^3

VERMONT CASTINGS

PROPERTY OF Vermont Castings Group

CONFIDENTIALITY AGREEMENT:

THIS DOCUMENT IS ISSUED ON THE CONDITION THAT THE INFORMATION CONTAINED IN THIS DOCUMENT IS THE PROPERTY OF VCG CORPORATION. EXCEPT AS SPECIFICALLY AUTHORIZED IN WRITING BY VCG CORPORATION. THE HOLDER OF THIS DOCUMENT SHALL KEEP ALL INFORMATION CONTAINED HEREIN CONFIDENTIAL AND SHALL PROTECT SAME IN WHOLE OR IN PART FROM DISCLOSURE AND DISSEMINATION TO ALL THIRD PARTIES.
THIS INFORMATION IS NOT TO BE COPIED, REPRODUCED OR DISCLOSED TO ANY OTHER PARTIES WITHOUT THE WRITTEN CONSENT OF VERMONT CASTINGS.

USED ON: INTREPID IV

TOLERANCES UNLESS OTHERWISE SPECIFIED

LINEAR & DIAMETER	BEND RADIUS
x.x ± 0.039 in (1.0 mm)	0.397 mm + 0.025 mm - 0
x.xx ± 0.020 in (0.5 mm)	
x.xxx ± 0.004 in (0.1 mm)	0.0156 in + 0.001 in - 0

GD & T TO COMPLY WITH ANSI Y14.5-1994

THIRD ANGLE PROJECTION: LEFT SIDE FRONT RIGHT SIDE

MATERIAL THICK: mm (in) MAX: mm (in) MIN: mm (in)

MATERIAL SPECIFICATION: (GA.)

DRAWN BY: PRM | DATE: 12.02.17 | SIZE: B

MATERIAL FINISH:

DESCRIPTION: INTREPID IV

SHEETS: 2 of 4

ECN No: 98460 | REV No: B | PART No: 000-2115

Section 7

Revision History

Date	Project No.	Tech. & Evaluator	Report Sect.	Summary of Changes
02/02/2018	0135WS038E	B Davis K Morgan	ALL	Original report was generated.
02/07/2023	0135WS038E (Edition 001)	R Tiegs K Morgan	7	Revision History added to report
			1	Run summary appropriateness statement added. (pg 6)
			2	Average CO Emissions added to report (pg 9)
			2	Added Corrected/Uncorrected Values to report
			6	Firebox Volume added (pg 218)
			5	New Manual added that clarifies instructions for catalyst bypass and firebox Volume (pg 194, 196)
			3	Train Precision Data added to run 1, 3, 4, 5 (pg 48, 83, 102, 120)
			3	Uncorrected Lab and results added to run 3,4,5 (Pg 84,85,103,104,121,122)
			3	Revised Conditioning Data added (pg 20)