Non-Confidential Business Information (Non-CBI)

Certification Test Report

Hearth and Home Technologies
Pellet-Fired Free Standing Room Heater

Model: PP130-B
PP 150
Outfitter-II

Prepared for:	Hearth and Home Technologies 352 Mountain House Road Halifax, PA 17032
Prepared by:	OMNI-Test Laboratories, Inc. 13327 NE Airport Way Portland, OR 97230 (503) 643-3788
Test Period:	March 26, 2018
Report Date:	June 2018
Report Revision Date:	September 7, 2022
Report Number:	0135PS041E.REV001

All data and information contained in this report are confidential and proprietary to Hearth and Home Technologies. Its significance is subject to the adequacy and representative character of the samples and to the comprehensiveness of the tests, examinations, or surveys made. The contents of this report cannot be copied or quoted, except in full, without specific, written authorization from Hearth and Home Technologies and OMNI-Test Laboratories, Inc. No use of the OMNI-Test Laboratories, Inc. name, logo, or registered mark (O-TL) is permitted, except as expressly authorized by OMNI-Test Laboratories, Inc. in writing.

- *Report Edition Number (002) 9/7/22* -

AUTHORIZED SIGNATORIES

This report has been reviewed and approved by the following authorized signatories:

Technician:



Riley Tiegs, Technician
OMNI-Test Laboratories, Inc.

Evaluator:

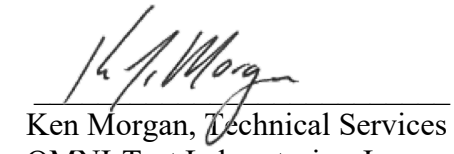

Ken Morgan, Technical Services Director
OMNI-Test Laboratories, Inc.

TABLE OF CONTENTS

PREFACE .....(3 pages)

1. SAMPLING PROCEDURES AND TEST RESULTS.....p. 4
   Introduction.....p. 5
   Sampling Procedure.....p. 5
   Summary of Results.....p. 6

   Summary Tables
   Table 1.1 – Particulate Emissions.....p. 7
   Table 1.2 – Efficiency and CO .....p. 7
   Table 1.3 – Test Facility Conditions.....p. 8
   Table 1.4 – Fuel Measurement Summary.....p. 8
   Table 1.5 – Dilution Tunnel and Flue Gas Measurements .....p. 9
   Table 1.6 – Heater Configuration .....p. 9

2. PHOTOGRAPHS/APPLIANCE DESCRIPTION/DRAWINGS.....p. 10
   Photographs.....p. 11
   Appliance Description .....p. 12
   Model Similarities.....p. 13

3. TEST DATA BY RUN.....p. 20
   Dilution Tunnel Schematic .....p. 22
   Run 1.....p. 23

4. QUALITY ASSURANCE/QUALITY CONTROL .....p. 37
   Sample Analysis..... p. 39
   Calibrations.....p. 47
   Example Calculations .....p. 63

5. LABELING & OWNER'S MANUAL(S).....p. 78

   Appendix A Revision History

Section 1

Sampling Procedures and Test Results

INTRODUCTION

Hearth and Home Technologies retained OMNI-Test Laboratories, Inc. (*OMNI*) to perform U.S. Environmental Protection Agency (EPA) certification testing on the PP130-B. The PP130-B is a freestanding, pellet-fired room heater.

The testing was performed at *OMNI*'s testing facility in Portland, Oregon. The altitude of the laboratory is 30 feet above sea level. The unit was received in good condition and logged in at the *OMNI*'s testing facility on March 22, 2018. It was assigned and labeled with *OMNI* ID #2266. *OMNI* representative Bruce Davis conducted the certification testing and completed all testing by March 26, 2018.

This report is organized in accordance with the EPA-recommended outline and is summarized in the Table of Contents immediately preceding this section. The results in this report are limited to the item(s) submitted.

In August of 2021 two additional models were added, these models share all components and firebox designs as the originally tested PP 130-B. Only cosmetic changes were made to the cabinet and door, these changes were determined to have no effect on emissions and efficiency certification values. A thermostat change was also approved, this approval was based on the room thermostat and on-board ambient probe still operate the same feed rate and blower speed program used for testing the original appliance. The thermostat design cannot make the appliance operate outside of the original design parameters tested on the PP 130-B.

SAMPLING PROCEDURE

The PP130-B was tested in accordance with the U.S. EPA 40 CFR Part 60, Subpart AAA – Standards of Performance for New Residential Wood Heaters using ASTM E2515 and ASTM E2779. The fuel used for certification testing was Lignetics pellet fuel; this fuel was graded as Premium by the Pellet Fuels Institute and was produced at registered mill # 03208. Particulate emissions were measured using dual sampling trains consisting of two sets of filters (front and back). The results of the integrated test run indicate an average particulate emission rate of 0.53 g/hr. The PP130-B results are within the emission limit of 2.0 g/hr for affected facilities manufactured on or after May 15, 2020 or sold at retail after December 31, 2020.

The model PP130-B was tested for thermal efficiency and carbon monoxide (CO) emissions in accordance with CSA B415.1-10. The heater has a demonstrated an average HHV thermal efficiency of 81.9% when tested with a 3" to 6" connector pipe adaptor as allowed by manufactureres installation instructions. The calculated CO emission rate was 0.161 g/min.

Efficiency results were calculated using spread sheet Version 2.2 created 12/14/2009 and distributed by CSA. Example calculations for CSA B415.1 were not provided by CSA; spreadsheet is protected from modifications by means of a password.

SUMMARY OF RESULTS

The average particulate emission rate over the complete, integrated test run was measured to be 0.53 g/hr.

The average particulate emission factor for the complete, integrated test run was measured to be 0.50 g/dry kg of fuel.

The average thermal efficiency for the complete, integrated test run was measured to be 81.9%.

The particulate emission rate calculated from the one-hour filter was 0.96 g/hr.

The proportionality results and sample train agreement for the test run was acceptable. Quality check results for each test run are presented in Section 3 of this report.

Negative filter weights were found in sampling train data, negative filter weights can be seen as positive transfer weight on the O-ring gaskets. There is no indication of filter loss, so the negative filter weight is added back into the calculation to prevent transfer weight on the O-rings from being counted as emissions. No additional sampling anomalies occurred, so these results are deemed to be valid and appropriate for certification to ASTM E2779.

SUMMARY TABLES

Table 1.1 – Particulate Emissions

	One-Hour Filter	Integrated Total
Emission Rate (g/hr)	0.96	0.53
Emission Factor (g/dry kg)	0.38	0.50

Table 1.2 – Efficiency and CO

	Burn Rate Segment			Integrated Total
	Maximum	Medium	Minimum	
Time (minutes)	60	120	180	360
Burn Rate (dry kg/hr)	2.53	1.03	0.60	1.06
Heat Output Rate (BTU/hr)	40,637	15,929	9,605	16,968
Heat Input Rate (BTU/hr)	49,207	20,017	11,676	20,712
Efficiency (%, HHV)	82.6	79.6	82.3	81.9
CO Emission Rate (g/min)	0.0383	0.150	0.215	0.160

Table 1.3 – Test Facility Conditions

	Initial	Final
Room Temperature (°F)	71	69
Barometric Pressure (in Hg)	30.40	30.44
Air Velocity (ft/min)	< 50	< 50
Induced Draft (in H2O)	0.0	0.0

Table 1.4 – Fuel Measurement Summary

Segment	**Time** (min)	**Burn Rate** (dry kg/hr)	**Consumed Fuel Weight** (lbs)	**Fuel Moisture Content** (dry basis - %)
Pretest	60	2.48	5.8	5.91
Maximum	60	2.53	5.9	5.91
Medium	120	1.03	4.8	5.91
Minimum	180	0.60	4.2	5.91
Integrated Total	360	1.06	14.9	5.91

Table 1.5 – Dilution Tunnel and Flue Gas Measurements

Segment	Average Flue Draft (in H_2O)	Average Dilution Tunnel Gas Measurements		
		Velocity (ft/sec)	Flow Rate (dscf/min)	Temperature (°F)
Integrated Total	-0.034	14.69	167.4	84

Table 1.6 – Heater Configuration

Segment	Heat Setting (Control Knob)	Trim Setting	Power Level (Shown in Program)
Pretest	Hi	+4	5
Maximum	Hi	+4	5
Medium	3	+3	2
Minimum	Lo	0	1

Section 2

Photographs
Appliance Description
Drawings

Hearth and Home Technologies
PP130-B

PHOTOGRAPHS

	
PP130-B Front	**PP130-B Back**

	
PP130-B Left	**PP130-B Control Knob**

APPLIANCE DESCRIPTION

Appliance Manufacturer: Hearth and Home Technologies

Pellet Stove Model: PP130-B

Type: Freestanding, air-circulating type, pellet-fired room heater.

The PP130-B's principle elements include a fuel hopper, mild steel firebox chamber, Stainless Steel burn pot, and electrical fuel feed, combustion air, and convection air supply systems.

Air is drawn by the combustion air blower through a stainless-steel burn pot, holes are located on the sides and bottom that allows air to mix with the fuel from all sides. Combustion products are routed out of the firebox chamber through a 3-inch diameter flue outlet located on the rear of the unit.

Fuel is supplied from the hopper to the burn pot via an auger that carries pellets up from the hopper to a drop tube that routs pellets into the burn pot. Fuel supply rate is varied by cycling the auger motor on/off time as needed for desired heat output settings.

A door located on the front of the appliance is used primarily for cleaning and servicing the fire pot. A 5mm thick ceramic glass panel is utilized for viewing the fire, the door is sealed when closed by use of a ¾" diameter rope gasket.

The electrical systems are regulated by a user-operated control board. On this board settings such as [insert settings] can be adjusted to achieve desired heat output. The unit is not designed to be controlled by an external thermostat system.

More detailed information is shown in the manufacturer's design drawings, Appendix C of this report. This information is considered confidential business information (CBI) by the manufacturer and is not included in the non-CBI version of this report.

Model Similarities

Model Outfitter-II

- No changes to current operational electrical and mechanical components and locations
- No changes to firebox size, parts, or configuration
- Rectangular door instead of arched (same overall size and location)
- New look by adjusting the front and side air outlets. Square inch opening and location the same
- Adding thermostat control option rather than ambient probe.
- Submitting top vent adapter TPVNT-7 for approval to use on this product.

Model PP 150

- No changes to current operational electrical and mechanical components and locations
- No changes to firebox size, parts, or configuration
- No changes to convection air components and/or air flow path
- Only parts impacted are 2 inch increase in height of front plate, hopper parts, and side panels (see provided print pack).

Front view comparison

HEARTH&HOME technologies
The Hearth Experts

PP130 (current)

27.01 sq. in.

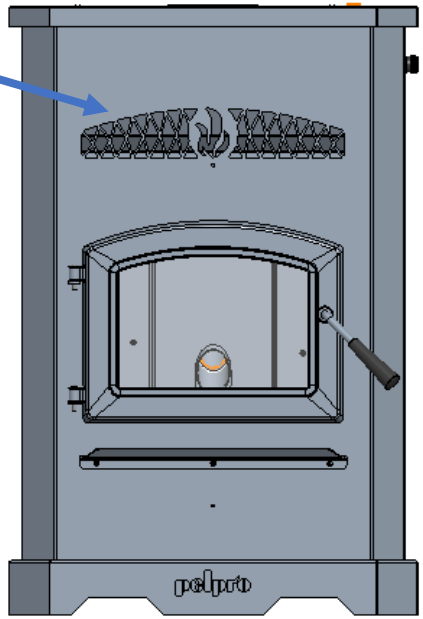

OUTFITTER II (new)

Adjusted front cut out design

Rectangular Door vs. Arched

27.14 sq. in.

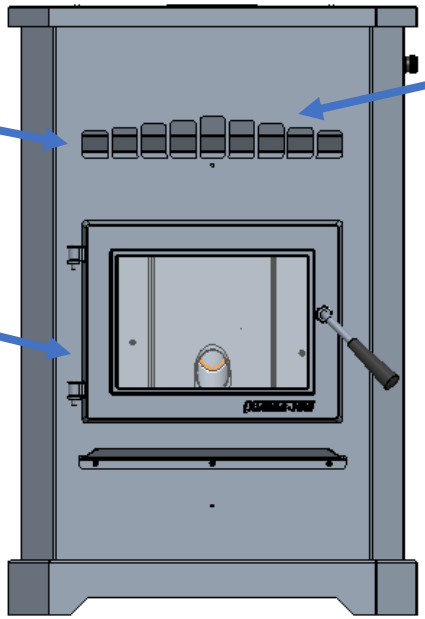

Side view comparison

HEARTH&HOME technologies
The Hearth Experts

PP130 (current)

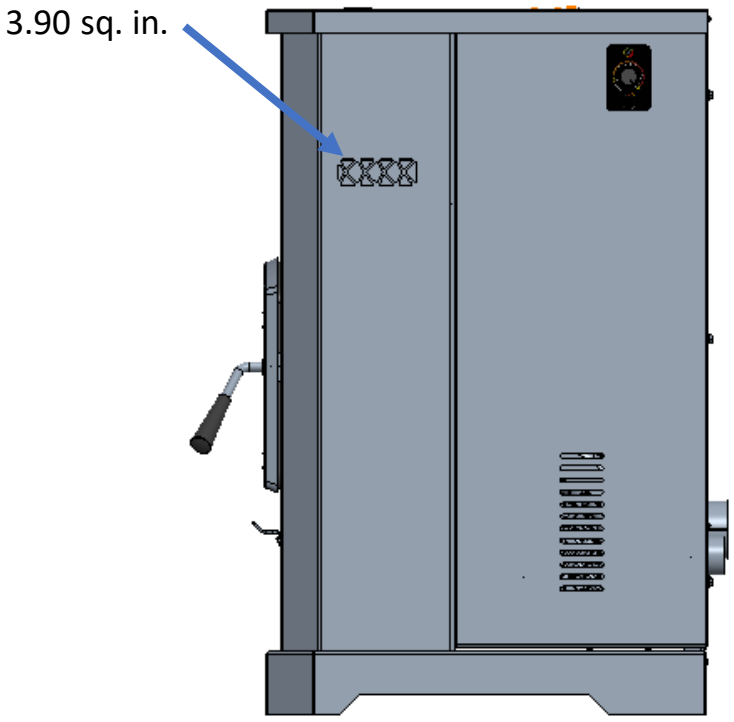

OUTFITTER II (new)

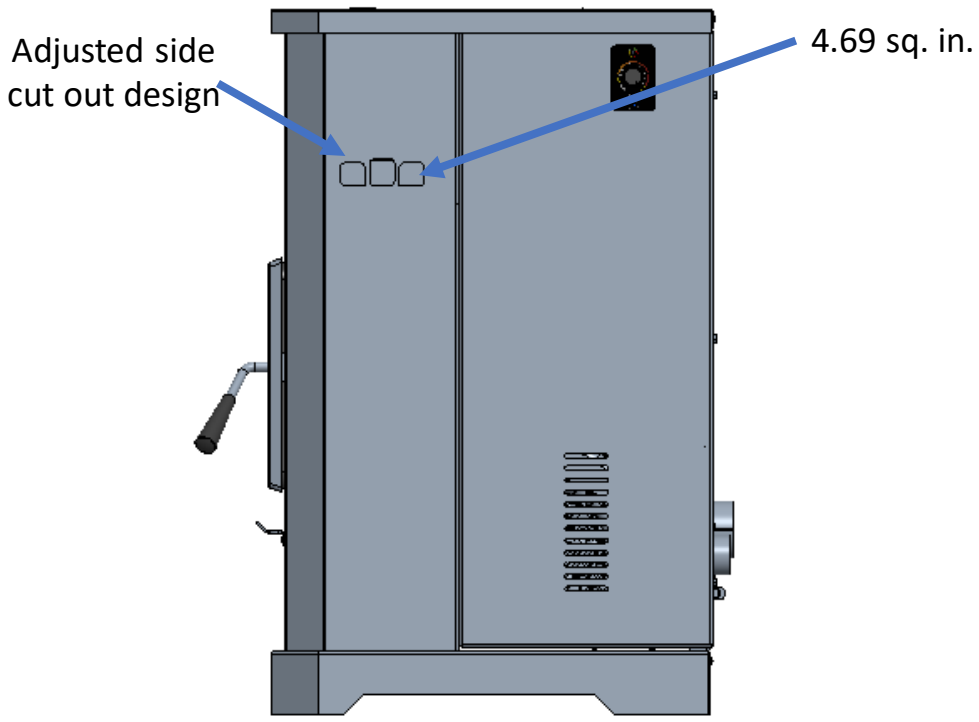

Back view comparison

PP130 (current)

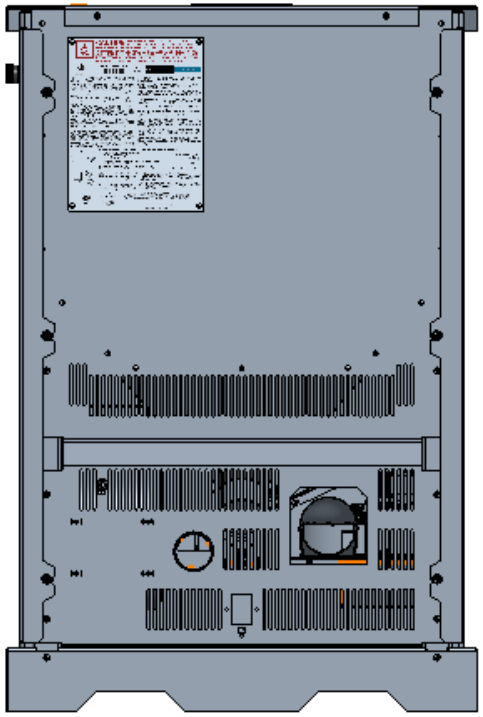

OUTFITTER II (new)

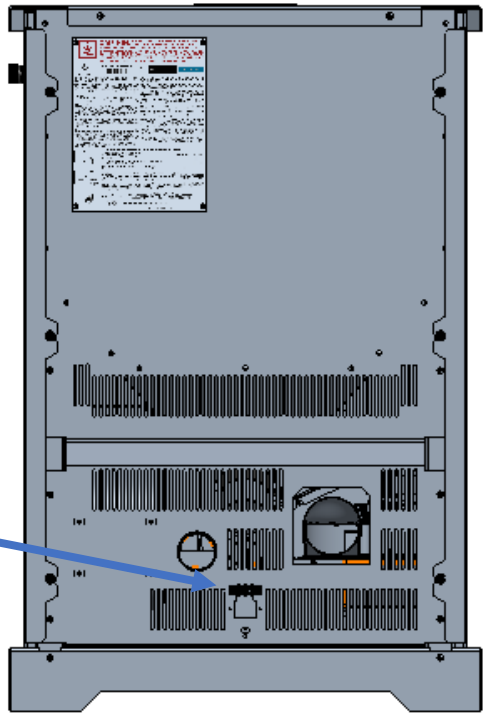

Thermostat block for external thermostat connection

Front view comparison

PP130 (current)

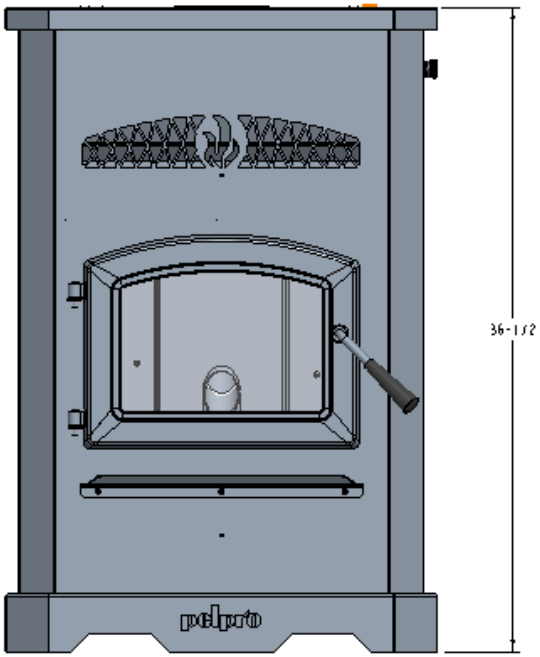

PP150 (new)

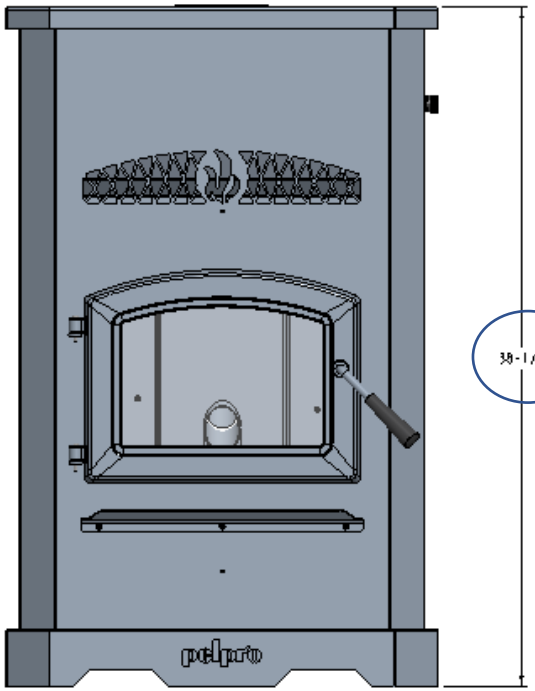

2” taller

Side view comparison

PP130 (current)

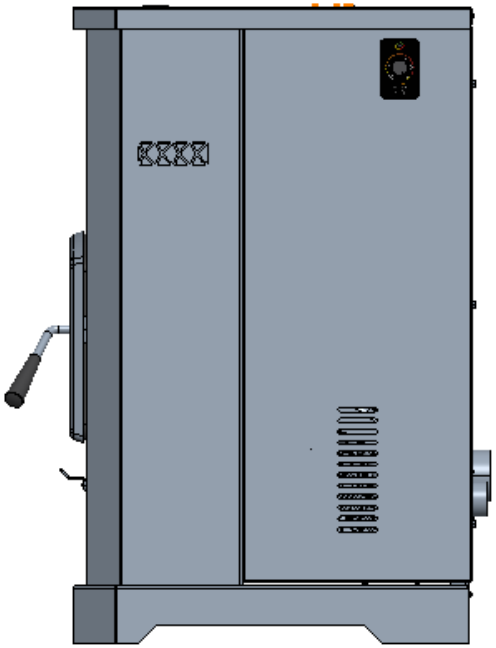

PP150 (new)



Back view comparison

PP130 (current)

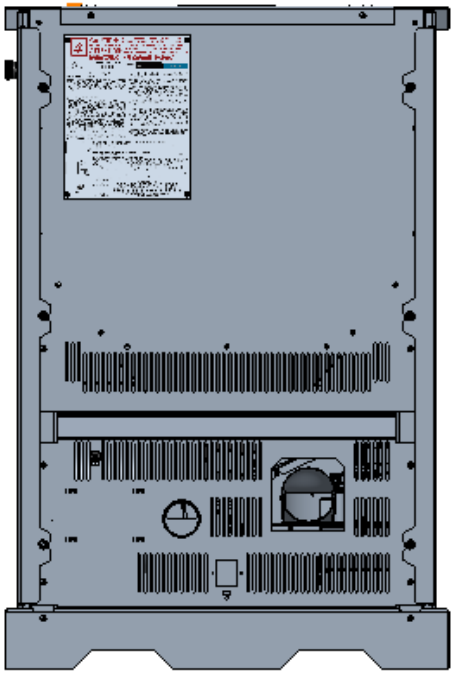

PP150 (new)

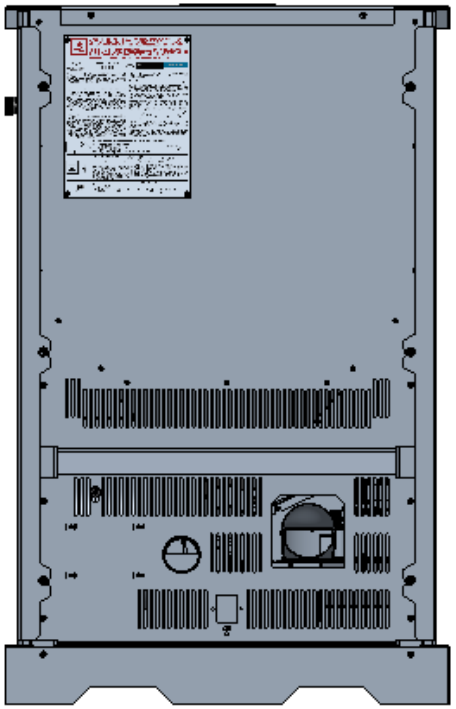

Section 3
Test Data by Run

Test Instructions: PP130-B

Created On/By: 03/20/18 (Winslow Howe)

Purpose: To create repeatability in test protocol of the stove.

Hopper Fuel: Hopper of the unit should be loaded completely with 3 full bags of fuel.

Test Settings: Unit should be set up using a 6” flue and 115VAC power source.

High: Dial should be set to “H” and the trim pot should be set to +4. When the unit is set and running at this setting the light above the dial control will Flash 5 times with a pause between each sequence

Medium: Dial should be set to 3 and the trim pot should be set to +3 When the unit is set and running at this setting the light above the dial control will flash 2 times with a pause between each sequence.

Low: Dial should be set to “L” and the trim pot should be set to 0. When the unit is set and running at this setting the light above the dial control will flash once with a pause between each flash.

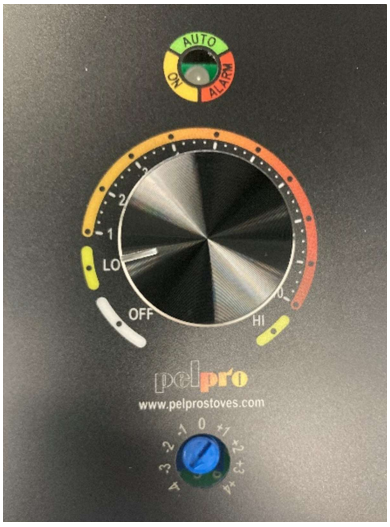

Low Burn Setting



Medium Burn Setting



High Burn Setting

Example of ASTM E2515-11 Dilution Tunnel

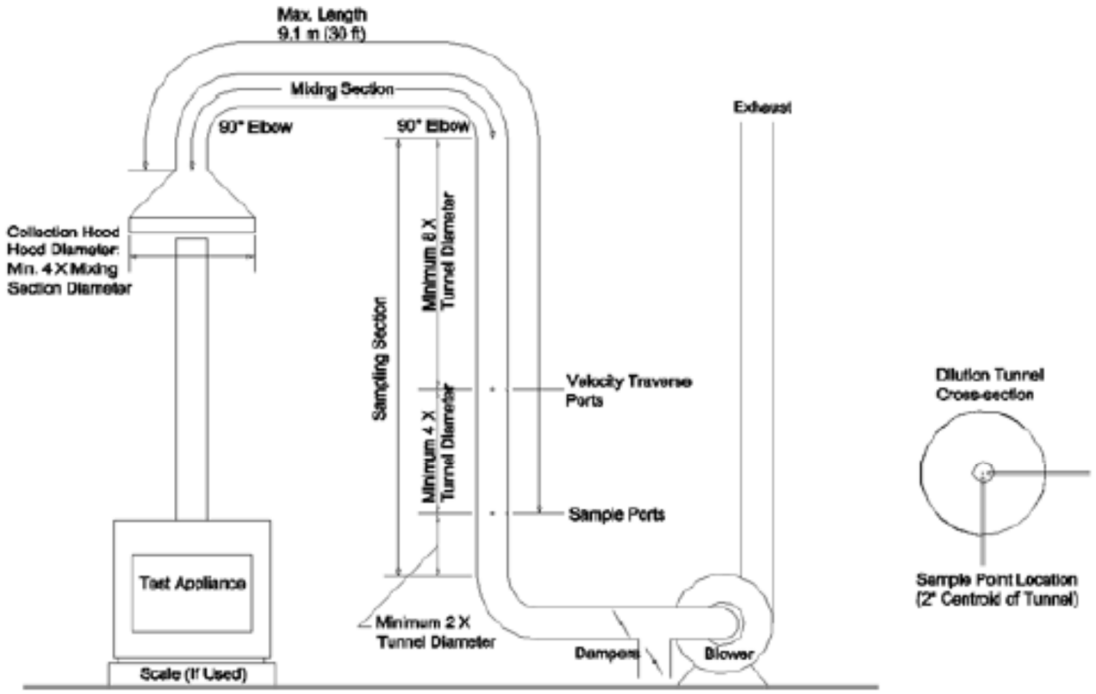

Prior to testing, sample point and travers point locations are verified to ensure placement is within specifications. Collection hood, tunnel diameter, and mixing section length are also verified to be within specifications.

Run 1

PP130 Conditioning Data					
Location	***HHT Facility - Colville WA***				
Technician	***Matt Owings***				
Elapsed Time (hrs)	Weight Loss	Scale Reading (lbs)	Stack Temp (F)	Fuel Added (Lbs)	Moisture Content
0		130		130	5.50%
1	3.4	126.6	183		
2	3.4	123.2	210		
3	3.3	119.9	207		
4	3.3	116.6	204		
5	3.3	113.3	203		
6	3.4	109.9	204		
7	3.4	106.5	203		
8	3.3	103.2	203		
9	3.4	99.8	202		
10	3.4	96.4	203		
11	3.4	93	202		
12	3.4	89.6	202		
13	3.4	86.2	199		
14	3.4	82.8	209		
15	3.4	79.4	204		
16	3.4	76	200		
17	2.9	73.1	132		
18	5.5	67.6	144		
19	5.8	61.8	261		
20	5.9	55.9	264		
21	5.7	50.2	262		
22	5.9	44.3	261		
23	5.9	38.4	258		
24	5.9	32.5	260		
25	5.9	26.6	258		
26	6	100.6	260	80	5.50%
27	5.9	94.7	259		
28	5.8	88.9	258		
29	5.8	83.1	258		
30	5.7	77.4	258		
31	5.8	71.6	258		
32	5.8	65.8	258		
33	5.7	60.1	257		
34	5.7	54.4	272		
35	6.1	48.3	211		
36	5.9	42.4	293		
37	6.1	36.3	291		
38	5.9	110.4	286	80	5.50%
39	6	104.4	284		
40	6	98.4	285		
41	6	92.4	284		
42	6	86.4	282		
43	6	80.4	284		
44	6	74.4	283		
45	6	68.4	284		
46	6	62.4	283		
47	6	56.4	282		
48	5.9	50.5	280		
49	5.8	44.7	278		
50	5.7	39	279		

Note: PP130 is a thermostatically controlled unit. Unit was configured to medium burn rate setting, but due to changes in room conditions, the unit modulated burn rate up and down to achieve the room temperature set point.

Pellet Heater Preburn Data - ASTM E2779

Manufacturer:	Hearth & Home
Model:	PP130B
Tracking No.:	2266
Project No.:	0135PS041E
Test Date:	3/26/2018

PB Length: 60 min
Recording Interval: 5 min

			Averages:	289	71	0	9	0
	Elapsed Time (min)	Scale Reading	Weight Change	Stack (F)	Ambient (F)	Draft ("H2O)	CO2 (%)	CO (%)
0	0	26.6	-	231	69	-0.04	8.48	0.00
1	5	26.1	-0.5	265	69	-0.04	9.36	0.00
2	10	25.6	-0.5	285	70	-0.05	10.59	0.00
3	15	25.1	-0.5	293	70	-0.05	11.12	0.01
4	20	24.6	-0.5	298	70	-0.05	10.38	0.00
5	25	24.1	-0.5	302	71	-0.05	9.31	0.00
6	30	23.7	-0.4	294	72	-0.05	10.49	0.00
7	35	23.2	-0.5	294	70	-0.05	11.19	0.01
8	40	22.7	-0.5	297	71	-0.05	0.96	0.09
9	45	22.2	-0.5	302	71	-0.05	11.30	0.02
10	50	21.7	-0.5	299	71	-0.05	9.35	0.00
11	55	21.2	-0.5	301	72	-0.05	10.26	0.00
12	60	20.8	-0.4	293	71	-0.05	9.00	0.00
13								
14								
15								

Pellet Heater Test Data - ASTM E2779 / ASTM E2515

Run: 1

Manufacturer: Hearth & Home
Model: PP130B
Tracking No.: 2266
Project No.: 0135PS041E
Test Date: 26-Mar-18
Beginning Clock Time: 11:57

High Burn End Time: 60
Medium Burn End Time: 180
Total Sampling Time: 360 min
Recording Interval: 5 min
Background Sample Volume: 54.966 cubic feet

Meter Box Y Factor: 0.977 (1) 0.979 (2) 1 (Amb)

Barometric Pressure: Begin 30.40 Middle End 30.44 Average 30.42 "Hg

OMNI Equipment Numbers:

PM Control Modules: 335,336
Dilution Tunnel MW(dry): 29.00 lb/lb-mole
Dilution Tunnel MW(wet): 28.78 lb/lb-mole
Dilution Tunnel H2O: 2.00 percent
Dilution Tunnel Static: -0.200 "H2O
Tunnel Area: 0.19635 ft2
Pitot Tube Cp: 0.99

Avg. Tunnel Velocity: 14.69 ft/sec.
Intial Tunnel Flow: 162.3 scfm
Average Tunnel Flow: 167.4 scfm
Post-Test Leak Check (1): 0.000 cfm @ 5 in. Hg
Post-Test Leak Check (2): 0.000 cfm @ 5 in. Hg
Fuel Moisture: 5.91 Dry Basis %

Velocity Traverse Data

	Pt.1	Pt.2	Pt.3	Pt.4	Pt.5	Pt.6	Pt.7	Pt.8	Center	
Initial dP	0.048	0.052	0.052	0.038	0.036	0.050	0.054	0.046	0.060	"H2O
Temp:	97	97	98	98	98	98	98	98	98	°F

V_{strav} 14.83 ft/sec V_{scent} 16.56 ft/sec F_p 0.896

	Particulate Sampling Data														Fuel Weight (lb)		Temperature Data (°F)				Stack Gas Data		
Elapsed Time (min)	Gas Meter 1 (ft^3)	Gas Meter 2 (ft^3)	Sample Rate 1 (cfm)	Sample Rate 2 (cfm)	Orifice dH 1 ("H_2O)	Meter Temp 1 (°F)	Meter Vacuum 1 ("Hg)	Orifice dH 2 ("H_2O)	Meter Temp 2 (°F)	Meter Vacuum 2 ("Hg)	Dilution Tunnel (°F)	Dilution Tunnel Center dP	Pro. Rate 1	Pro. Rate 2	Scale Reading	Weight Change	Stack	Filter 1	Filter 2	Ambient	Draft ("H_2O)	CO_2 (%)	CO (%)
0	0.000	0.000			0.03	74	1.74	0.12	75	1	98	0.060			20.8		293	69	70	71	-0.050	8.76	0.00202
5	0.813	0.771	0.16	0.15	1.38	74	2.01	1.08	75	1.1	97	0.060	102	99	20.3	-0.5	296	71	72	71	-0.050	9.96	0.00338
10	1.634	1.551	0.16	0.16	1.32	75	1.97	1.09	76	1.1	98	0.058	104	102	19.8	-0.5	298	72	72	71	-0.051	9.27	0.00257
15	2.442	2.333	0.16	0.16	1.32	75	1.96	1.08	77	1.1	98	0.059	102	101	19.2	-0.6	302	72	73	71	-0.052	11.64	0.03132
20	3.249	3.114	0.16	0.16	1.32	76	1.96	1.07	77	1.1	98	0.060	101	100	18.8	-0.4	299	73	73	72	-0.052	8.2	0.00335
25	4.056	3.895	0.16	0.16	1.32	77	1.95	1.07	78	1.1	98	0.058	102	102	18.3	-0.5	299	73	74	72	-0.052	9.66	0.01784
30	4.863	4.675	0.16	0.16	1.31	78	1.95	1.07	79	1.1	98	0.059	101	101	17.9	-0.4	293	74	74	71	-0.051	8.46	0.00232
35	5.673	5.458	0.16	0.16	1.32	79	1.95	1.07	80	1.1	98	0.058	102	102	17.4	-0.5	294	74	74	72	-0.052	9.86	0.00491
40	6.481	6.240	0.16	0.16	1.31	79	1.97	1.07	81	1.1	98	0.059	101	101	16.9	-0.5	299	74	74	72	-0.052	9.84	0.00335
45	7.289	7.019	0.16	0.16	1.31	80	1.97	1.06	81	1.1	98	0.058	102	101	16.4	-0.5	297	74	75	73	-0.052	10.23	0.00656
50	8.098	7.799	0.16	0.16	1.31	80	1.97	1.06	82	1.1	98	0.059	101	100	15.9	-0.5	301	75	74	72	-0.053	10.72	0.00526
55	8.907	8.579	0.16	0.16	1.32	81	1.98	1.05	82	1.1	99	0.056	104	103	15.4	-0.5	302	75	75	72	-0.053	10.69	0.00461
60	9.717	9.359	0.16	0.16	1.31	81	1.96	1.06	82	1.1	98	0.060	100	99	14.9	-0.5	300	75	75	72	-0.052	5.24	0.00854
65	10.533	10.138	0.16	0.16	1.32	82	1.94	1.06	83	1.1	95	0.061	100	98	14.6	-0.3	264	76	75	71	-0.047	4.62	0.01395
70	11.347	10.918	0.16	0.16	1.32	82	1.94	1.05	83	1.1	92	0.060	100	99	14.4	-0.2	239	75	74	72	-0.042	3.63	0.01334
75	12.163	11.699	0.16	0.16	1.32	82	1.95	1.05	83	1.1	91	0.061	99	98	14.3	-0.1	222	75	74	72	-0.039	4.21	0.01368
80	12.983	12.492	0.16	0.16	1.36	82	1.98	1.12	83	1.2	89	0.060	100	100	14.1	-0.2	214	74	74	71	-0.038	3.5	0.0331
85	13.810	13.297	0.17	0.16	1.35	82	1.98	1.12	83	1.2	88	0.061	100	101	13.9	-0.2	209	74	74	71	-0.037	4.59	0.00776
90	14.636	14.102	0.17	0.16	1.35	82	1.98	1.11	83	1.2	90	0.058	103	103	13.7	-0.2	220	74	73	71	-0.040	3.21	0.05694
95	15.462	14.906	0.17	0.16	1.35	82	1.98	1.11	83	1.2	88	0.060	101	101	13.5	-0.2	207	74	73	71	-0.036	4.1	0.00468
100	16.288	15.712	0.17	0.16	1.36	82	1.99	1.11	83	1.2	87	0.059	102	102	13.3	-0.2	203	73	73	71	-0.035	3.1	0.05796
105	17.115	16.516	0.17	0.16	1.36	82	1.98	1.11	83	1.2	87	0.059	102	102	13.2	-0.1	200	73	73	70	-0.035	4.13	0.00711
110	17.942	17.321	0.17	0.16	1.36	82	1.98	1.12	83	1.2	87	0.059	102	102	13.0	-0.2	199	73	73	71	-0.034	4.7	0.00799
115	18.769	18.127	0.17	0.16	1.36	82	1.99	1.11	83	1.2	87	0.059	102	102	12.8	-0.2	201	73	73	71	-0.035	4.2	0.00753
120	19.596	18.932	0.17	0.16	1.35	82	1.99	1.12	83	1.2	87	0.060	101	101	12.6	-0.2	203	73	73	71	-0.036	4.73	0.00536
125	20.423	19.738	0.17	0.16	1.36	82	1.98	1.11	83	1.2	87	0.060	101	101	12.4	-0.2	206	73	73	71	-0.035	3.56	0.05313
130	21.250	20.542	0.17	0.16	1.36	83	1.99	1.11	83	1.2	87	0.060	101	101	12.2	-0.2	202	73	73	71	-0.036	3.07	0.04823
135	22.078	21.348	0.17	0.16	1.36	83	1.99	1.11	83	1.2	86	0.059	102	102	12.0	-0.2	202	73	73	71	-0.035	2.54	0.104
140	22.903	22.149	0.17	0.16	1.36	82	1.99	1.11	83	1.2	86	0.061	100	100	11.8	-0.2	201	73	73	71	-0.035	4.46	0.00394
145	23.730	22.955	0.17	0.16	1.36	83	1.99	1.11	83	1.2	87	0.059	102	102	11.6	-0.2	206	73	73	72	-0.036	4.65	0.00896
150	24.558	23.759	0.17	0.16	1.35	83	1.99	1.11	83	1.2	87	0.060	101	101	11.4	-0.2	205	73	73	71	-0.036	4.03	0.02147
155	25.384	24.564	0.17	0.16	1.35	83	1.99	1.11	83	1.2	88	0.061	100	101	11.2	-0.2	208	73	73	71	-0.036	4.28	0.02176
160	26.211	25.368	0.17	0.16	1.36	83	2	1.10	83	1.2	87	0.059	102	102	11.0	-0.2	203	73	73	71	-0.035	4.86	0.01449
165	27.038	26.173	0.17	0.16	1.36	83	1.99	1.11	83	1.2	87	0.060	101	101	10.8	-0.2	201	73	73	71	-0.035	3.31	0.04513
170	27.866	26.977	0.17	0.16	1.37	83	2	1.10	83	1.2	87	0.060	101	101	10.6	-0.2	203	73	73	72	-0.036	4.96	0.01486

Pellet Heater Test Data - ASTM E2779 / ASTM E2515

Run: 1

Manufacturer: Hearth & Home
Model: PP130B
Tracking No.: 2266
Project No.: 0135PS041E
Test Date: 26-Mar-18
Beginning Clock Time: 11:57

High Burn End Time: 60
Medium Burn End Time: 180
Total Sampling Time: 360 min
Recording Interval: 5 min
Background Sample Volume: 54.966 cubic feet

Meter Box Y Factor: 0.977 (1) 0.979 (2) 1 (Amb)

Barometric Pressure: Begin 30.40 Middle End 30.44 Average 30.42 "Hg

OMNI Equipment Numbers:

PM Control Modules: 335,336
Dilution Tunnel MW(dry): 29.00 lb/lb-mole
Dilution Tunnel MW(wet): 28.78 lb/lb-mole
Dilution Tunnel H2O: 2.00 percent
Dilution Tunnel Static: -0.200 "H2O
Tunnel Area: 0.19635 ft2
Pitot Tube Cp: 0.99

Avg. Tunnel Velocity: 14.69 ft/sec.
Intial Tunnel Flow: 162.3 scfm
Average Tunnel Flow: 167.4 scfm
Post-Test Leak Check (1): 0.000 cfm @ 5 in. Hg
Post-Test Leak Check (2): 0.000 cfm @ 5 in. Hg
Fuel Moisture: 5.91 Dry Basis %

Velocity Traverse Data

	Pt.1	Pt.2	Pt.3	Pt.4	Pt.5	Pt.6	Pt.7	Pt.8	Center	
Initial dP	0.048	0.052	0.052	0.038	0.036	0.050	0.054	0.046	0.060	"H2O
Temp:	97	97	98	98	98	98	98	98	98	°F

V_{strav} 14.83 ft/sec V_{scent} 16.56 ft/sec F_p 0.896

	Particulate Sampling Data														Fuel Weight (lb)		Temperature Data (°F)				Stack Gas Data		
Elapsed Time (min)	Gas Meter 1 (ft^3)	Gas Meter 2 (ft^3)	Sample Rate 1 (cfm)	Sample Rate 2 (cfm)	Orifice dH 1 ("H_2O)	Meter Temp 1 (°F)	Meter Vacuum 1 ("Hg)	Orifice dH 2 ("H_2O)	Meter Temp 2 (°F)	Meter Vacuum 2 ("Hg)	Dilution Tunnel (°F)	Dilution Tunnel Center dP	Pro. Rate 1	Pro. Rate 2	Scale Reading	Weight Change	Stack	Filter 1	Filter 2	Ambient	Draft ("H_2O)	CO_2 (%)	CO (%)
175	28.694	27.781	0.17	0.16	1.35	83	1.99	1.11	83	1.2	87	0.062	99	100	10.3	-0.3	206	73	73	71	-0.037	4.89	0.02766
180	29.521	28.586	0.17	0.16	1.36	83	1.99	1.11	83	1.2	87	0.059	102	102	10.1	-0.2	207	73	73	71	-0.037	4.27	0.02154
185	30.348	29.389	0.17	0.16	1.35	83	2	1.11	83	1.2	87	0.060	101	101	10.0	-0.1	208	73	73	72	-0.034	3.22	0.04535
190	31.175	30.193	0.17	0.16	1.36	83	1.99	1.10	83	1.2	82	0.058	102	102	9.9	-0.1	172	73	73	72	-0.029	2.91	0.05147
195	32.002	30.995	0.17	0.16	1.36	83	1.99	1.10	83	1.2	80	0.059	101	101	9.8	-0.1	161	73	73	72	-0.028	2.46	0.05105
200	32.829	31.799	0.17	0.16	1.36	83	1.99	1.10	83	1.2	78	0.060	100	100	9.7	-0.1	154	73	73	72	-0.027	3.02	0.0332
205	33.657	32.601	0.17	0.16	1.36	83	2	1.10	83	1.2	77	0.061	99	99	9.6	-0.1	151	72	72	71	-0.027	3.66	0.02066
210	34.485	33.404	0.17	0.16	1.36	83	2	1.10	83	1.2	76	0.062	98	98	9.4	-0.2	150	72	72	70	-0.026	3.01	0.04753
215	35.313	34.207	0.17	0.16	1.36	83	2	1.10	83	1.2	79	0.062	99	99	9.3	-0.1	174	72	72	70	-0.033	2.09	0.104
220	36.141	35.011	0.17	0.16	1.35	83	2	1.10	83	1.2	76	0.063	97	98	9.2	-0.1	155	72	72	70	-0.027	3.5	0.02591
225	36.969	35.813	0.17	0.16	1.36	83	2	1.10	83	1.2	75	0.062	98	98	9.1	-0.1	149	72	71	70	-0.025	2.18	0.06103
230	37.797	36.617	0.17	0.16	1.36	82	1.99	1.09	82	1.2	75	0.062	98	99	9.0	-0.1	148	71	71	70	-0.026	3.04	0.0411
235	38.625	37.420	0.17	0.16	1.36	82	1.99	1.10	82	1.2	74	0.062	98	98	8.9	-0.1	146	71	71	70	-0.025	4.09	0.01687
240	39.453	38.223	0.17	0.16	1.37	82	2	1.09	82	1.2	74	0.061	99	99	8.8	-0.1	146	71	71	69	-0.025	4.18	0.0099
245	40.280	39.025	0.17	0.16	1.36	82	2	1.10	82	1.2	74	0.064	97	97	8.6	-0.2	145	71	70	69	-0.025	2.84	0.04341
250	41.109	39.828	0.17	0.16	1.37	82	2	1.09	82	1.2	74	0.061	99	99	8.5	-0.1	154	71	70	69	-0.028	2.2	0.09088
255	41.937	40.630	0.17	0.16	1.36	81	2	1.10	82	1.2	74	0.063	98	98	8.4	-0.1	151	70	70	69	-0.027	2.87	0.03562
260	42.764	41.433	0.17	0.16	1.37	81	2.01	1.10	81	1.2	74	0.063	98	98	8.3	-0.1	148	70	70	69	-0.026	2.78	0.04288
265	43.592	42.236	0.17	0.16	1.35	81	2	1.09	81	1.2	73	0.064	97	97	8.1	-0.2	148	70	70	69	-0.026	4.53	0.01071
270	44.419	43.038	0.17	0.16	1.36	81	2	1.10	81	1.2	73	0.063	97	98	8.0	-0.1	146	70	70	69	-0.026	2.56	0.05925
275	45.246	43.840	0.17	0.16	1.37	81	2	1.09	81	1.2	73	0.063	97	98	7.9	-0.1	145	70	69	69	-0.025	2.25	0.104
280	46.073	44.641	0.17	0.16	1.36	81	2	1.10	81	1.2	74	0.063	98	98	7.8	-0.1	154	70	69	69	-0.028	2.07	0.104
285	46.900	45.443	0.17	0.16	1.37	81	2.01	1.09	81	1.2	73	0.064	97	97	7.7	-0.1	147	70	69	69	-0.026	3.2	0.04107
290	47.728	46.244	0.17	0.16	1.36	80	2.01	1.09	80	1.2	74	0.061	99	99	7.6	-0.1	144	69	69	69	-0.025	2.46	0.104
295	48.554	47.045	0.17	0.16	1.35	80	2	1.09	80	1.2	74	0.061	99	99	7.5	-0.1	144	70	69	69	-0.024	4.03	0.01382
300	49.380	47.846	0.17	0.16	1.35	80	2.01	1.09	80	1.2	75	0.061	99	99	7.4	-0.1	145	70	69	69	-0.024	2.21	0.104
305	50.205	48.645	0.16	0.16	1.36	80	2.01	1.09	80	1.2	76	0.061	99	99	7.2	-0.2	147	70	70	70	-0.025	3.12	0.02792
310	51.031	49.445	0.17	0.16	1.36	80	2.01	1.08	80	1.2	77	0.060	100	100	7.1	-0.1	159	70	70	70	-0.026	1.99	0.104
315	51.856	50.244	0.17	0.16	1.36	81	2.01	1.08	81	1.2	77	0.060	100	100	7.0	-0.1	148	70	70	70	-0.025	3.42	0.04457
320	52.681	51.042	0.16	0.16	1.36	81	2.01	1.08	81	1.2	77	0.060	100	100	6.9	-0.1	149	70	70	70	-0.025	3.43	0.0295
325	53.505	51.841	0.16	0.16	1.36	81	2.01	1.08	81	1.2	76	0.062	98	98	6.8	-0.1	148	70	70	70	-0.026	3.12	0.02387
330	54.330	52.640	0.16	0.16	1.36	81	2.01	1.08	81	1.2	74	0.061	99	99	6.6	-0.2	146	70	70	69	-0.025	3.01	0.03756
335	55.156	53.437	0.17	0.16	1.36	81	2.02	1.08	81	1.2	74	0.058	102	101	6.5	-0.1	146	70	70	69	-0.026	3.43	0.02986
340	55.981	54.236	0.17	0.16	1.35	81	2.02	1.08	81	1.3	77	0.059	101	101	6.4	-0.1	175	70	70	70	-0.030	2.29	0.07308
345	56.805	55.035	0.16	0.16	1.36	81	2.02	1.07	81	1.2	74	0.062	98	98	6.3	-0.1	151	70	70	69	-0.028	3.74	0.01487

Pellet Heater Test Data - ASTM E2779 / ASTM E2515

Run: 1

Manufacturer: Hearth & Home
Model: PP130B
Tracking No.: 2266
Project No.: 0135PS041E
Test Date: 26-Mar-18
Beginning Clock Time: 11:57

High Burn End Time: 60
Medium Burn End Time: 180
Total Sampling Time: 360 min
Recording Interval: 5 min
Background Sample Volume: 54.966 cubic feet

Meter Box Y Factor: 0.977 (1) 0.979 (2) 1 (Amb)

Barometric Pressure: Begin 30.40 Middle End 30.44 Average 30.42 "Hg

OMNI Equipment Numbers:

PM Control Modules: 335,336
Dilution Tunnel MW(dry): 29.00 lb/lb-mole
Dilution Tunnel MW(wet): 28.78 lb/lb-mole
Dilution Tunnel H2O: 2.00 percent
Dilution Tunnel Static: -0.200 "H2O
Tunnel Area: 0.19635 ft2
Pitot Tube Cp: 0.99

Avg. Tunnel Velocity: 14.69 ft/sec.
Intial Tunnel Flow: 162.3 scfm
Average Tunnel Flow: 167.4 scfm
Post-Test Leak Check (1): 0.000 cfm @ 5 in. Hg
Post-Test Leak Check (2): 0.000 cfm @ 5 in. Hg
Fuel Moisture: 5.91 Dry Basis %

Velocity Traverse Data

	Pt.1	Pt.2	Pt.3	Pt.4	Pt.5	Pt.6	Pt.7	Pt.8	Center	
Initial dP	0.048	0.052	0.052	0.038	0.036	0.050	0.054	0.046	0.060	"H2O
Temp:	97	97	98	98	98	98	98	98	98	°F

V_{strav} 14.83 ft/sec V_{scent} 16.56 ft/sec F_p 0.896

	Particulate Sampling Data														Fuel Weight (lb)		Temperature Data (°F)				Stack Gas Data		
Elapsed Time (min)	Gas Meter 1 (ft^3)	Gas Meter 2 (ft^3)	Sample Rate 1 (cfm)	Sample Rate 2 (cfm)	Orifice dH 1 ("H_2O)	Meter Temp 1 (°F)	Meter Vacuum 1 ("Hg)	Orifice dH 2 ("H_2O)	Meter Temp 2 (°F)	Meter Vacuum 2 ("Hg)	Dilution Tunnel (°F)	Dilution Tunnel Center dP	Pro. Rate 1	Pro. Rate 2	Scale Reading	Weight Change	Stack	Filter 1	Filter 2	Ambient	Draft ("H_2O)	CO_2 (%)	CO (%)
350	57.630	55.832	0.17	0.16	1.36	81	2.01	1.09	81	1.3	74	0.062	98	98	6.1	-0.2	148	70	70	69	-0.026	4.5	0.01022
355	58.456	56.630	0.17	0.16	1.35	81	2.01	1.09	81	1.3	73	0.063	97	97	6.0	-0.1	145	70	69	69	-0.026	2.48	0.0626
360	59.281	57.428	0.16	0.16	1.35	81	2.01	1.08	81	1.2	73	0.062	98	98	5.9	-0.1	146	69	69	69	-0.026	2.42	0.07169
Avg/Tot	59.281	57.428	0.16	0.16	1.33	81	1.99	1.08	82	1.18	84	0.06	100	100			197	72	72	71	-0.034	4.50	0.03

Pellet Heater Lab Data - ASTM E2779 / ASTM E2515

Manufacturer:	Hearth & Home	Equipment Numbers:	637, 283A, 592
Model:	PP130B		
Tracking No.:	2266		
Project No.:	0135PS041E		
Run #:	1		
Date:	3/26/18		

TRAIN 1 (First Hour emissions)

Sample Component	Reagent	Filter, Probe or Dish #	Weights		
			Final, mg	Tare, mg	Particulate, mg
A. Front filter catch	Filter	D469	116.2	115.3	0.9
B. Rear filter catch	Filter				0.0
C. Probe catch*	Probe				0.0
D. Filter seals catch*	Seals				0.0

Sub-Total	Total Particulate, mg:	0.9

TRAIN 1 (Remainder of Test)

Sample Component	Reagent	Filter, Probe or Dish #	Weights		
			Final, mg	Tare, mg	Particulate, mg
A. Front filter catch	Filter	D470	117.7	115.9	1.8
B. Rear filter catch	Filter	D471	114.5	114.7	-0.2
C. Probe catch*	Probe	29	114278.4	114278.3	0.1
D. Filter seals catch*	Seals	R574	3294.7	3294.1	0.6

Sub-Total	Total Particulate, mg:	2.3
Train 1 Aggregate	Total Particulate, mg:	**3.2**

TRAIN 2

Sample Component	Reagent	Filter, Probe or Dish #	Weights		
			Final, mg	Tare, mg	Particulate, mg
A. Front filter catch	Filter	D472	119.3	116.4	2.9
B. Rear filter catch	Filter	D473	116.2	116.2	0.0
C. Probe catch*	Probe	30	114329.1	114329.2	0.0
D. Filter seals catch*	Seals	R575	3381.4	3381.1	0.3

Total Particulate, mg:	3.2

AMBIENT

Sample Component	Reagent	Filter # or Probe #	Weights		
			Final, mg	Tare, mg	Particulate, mg
A. Front filter catch*	Filter		116.2	116.0	0.2

Total Particulate, mg:	0.2

*Particulate catch that results in a negative number, is assumed to be zero for probes and seals, negative numbers for filters are assumed to be part of the seal weight

Component	Equations:
A. Front filter catch	Final (mg) - Tare (mg) = Particulate, mg
B. Rear filter catch	Final (mg) - Tare (mg) = Particulate, mg
C. Probe catch	Final (mg) - Tare (mg) = Particulate, mg

Pellet Heater Test Results - ASTM E2779 / ASTM E2515

Manufacturer: Hearth & Home
Model: PP130B
Project No.: 0135PS041E
Tracking No.: 2266
Run: 1
Test Date: 03/26/18

Burn Rate (Composite)	**1.06 kg/hr dry**
Average Tunnel Temperature	84 degrees F
Average Gas Velocity in Dilution Tunnel - vs	14.69 feet/second
Average Gas Flow Rate in Dilution Tunnel - Qsd	10045.9 dscf/hour
Average Delta p	0.060 inches H20
Average Delta H	1.33 inches H20
Total Time of Test	360 minutes

Burn Rate (High)	**2.53**	kg/hr dry
Burn Rate (Med)	**1.03**	kg/hr dry
	40.7%	of High
Burn Rate (Low)	**0.60**	kg/hr dry
	23.7%	of High

	AMBIENT	SAMPLE TRAIN 1	SAMPLE TRAIN 2	1st HR FILTER (TRAIN 1)
Total Sample Volume - Vm	54.966 cubic feet	59.281 cubic feet	57.428 cubic feet	9.717 cubic feet
Average Gas Meter Temperature	71 degrees F	81 degrees F	82 degrees F	81 degrees F
Total Sample Volume (Standard Conditions) - Vmstd	55.595 dscf	57.621 dscf	55.856 dscf	9.444 dscf
Total Particulates - m_n	0.2 mg	3.2 mg	3.2 mg	0.9 mg
Particulate Concentration (dry-standard) - C_f/C_s	0.000004 grams/dscf	0.00006 grams/dscf	0.00006 grams/dscf	0.00010 grams/dscf
Total Particulate Emissions - E_T	0.22 grams	3.13 grams	3.24 grams	0.96 grams
Particulate Emission Rate	0.04 grams/hour	0.52 grams/hour	0.54 grams/hour	0.96 grams/hour
Emissisons Factor		0.49 g/kg	0.51 g/kg	0.38 g/kg
Difference from Average Total Particulate Emissions		0.05 grams	0.05 grams	

Dual Train Comparison Results Are Acceptable

FINAL AVERAGE RESULTS

Integrated Test Run	
Total Particulate Emissions - E_T	3.18 grams
Particulate Emission Rate	**0.53 grams/hour**
Emissisons Factor	0.50 grams/kg
First Hour Emissions	
Total Particulate Emissions - E_T	0.96 grams
Particulate Emission Rate	0.96 grams/hour
Emissisons Factor	0.38 grams/kg

QUALITY CHECKS

Filter Temps < 90 °F	OK
Filter Face Velocity (47 mm)	OK
Leakage Rate	OK
Ambient Temp (55-90°F)	OK
Train Precision ≤ 7.5%	1.66
Train Precision ±0.5 g/kg	0.02
Negative Probe Weight Eval.	OK
Pro-Rate Variation	OK
Medium Burn Rate < 50%	OK

OMNI-Test Laboratories

Manufacturer: Hearth & Home
Model: PP130B
Date: 03/26/18
Run: 1
Control #: 0135PS041E
Test Duration: 360
Output Category: Integrated

Technicians: _____

Test Results in Accordance with CSA B415.1-09

	HHV Basis	LHV Basis
Overall Efficiency	81.9%	87.5%
Combustion Efficiency	99.5%	99.5%
Heat Transfer Efficiency	82%	88.0%

Output Rate (kJ/h)	17,887	16,968	**(Btu/h)**
Burn Rate (kg/h)	1.06	2.34	**(lb/h)**
Input (kJ/h)	21,834	20,712	**(Btu/h)**

Test Load Weight (dry kg)	6.38	14.07	**dry lb**
MC wet (%)	5.580209612		
MC dry (%)	5.91		
Particulate (g)	3.18		
CO (g)	58		
Test Duration (h)	6.00		

Emissions	**Particulate**	**CO**
g/MJ Output	0.03	0.54
g/kg Dry Fuel	0.50	9.07
g/h	0.53	9.65
lb/MM Btu Output	0.07	1.25

Air/Fuel Ratio (A/F)	27.02

VERSION: **2.2** **12/14/2009**

OMNI-Test Laboratories

Manufacturer: Hearth & Home
Model: PP130B
Date: 03/26/18
Run: 1
Control #: 0135PS041E
Test Duration: 60
Output Category: Maximum

Technicians: _____

Test Results in Accordance with CSA B415.1-09

	HHV Basis	LHV Basis
Overall Efficiency	82.6%	88.2%
Combustion Efficiency	99.5%	99.5%
Heat Transfer Efficiency	83%	88.7%

Output Rate (kJ/h)	42,838	40,637	**(Btu/h)**
Burn Rate (kg/h)	2.53	5.57	**(lb/h)**
Input (kJ/h)	51,873	49,207	**(Btu/h)**

Test Load Weight (dry kg)	2.53	5.57	**dry lb**
MC wet (%)	5.580209612		
MC dry (%)	5.91		
Particulate (g)	0		
CO (g)	2		
Test Duration (h)	1.00		

Emissions	**Particulate**	**CO**
g/MJ Output	0.00	0.05
g/kg Dry Fuel	0.00	0.93
g/h	0.00	2.34
lb/MM Btu Output	0.00	0.13

Air/Fuel Ratio (A/F)	12.99

VERSION: **2.2** **12/14/2009**

OMNI-Test Laboratories

Manufacturer: Hearth & Home
Model: PP130B
Date: 03/26/18
Run: 1
Control #: 0135PS041E
Test Duration: 120
Output Category: Medium

Technicians: _____

Test Results in Accordance with CSA B415.1-09

	HHV Basis	LHV Basis
Overall Efficiency	79.6%	85.0%
Combustion Efficiency	99.5%	99.5%
Heat Transfer Efficiency	80%	85.4%

Output Rate (kJ/h)	16,792	15,929	**(Btu/h)**
Burn Rate (kg/h)	1.03	2.27	**(lb/h)**
Input (kJ/h)	21,101	20,017	**(Btu/h)**

Test Load Weight (dry kg)	2.06	4.53	**dry lb**
MC wet (%)	5.580209612		
MC dry (%)	5.91		
Particulate (g)	0		
CO (g)	18		
Test Duration (h)	2.00		

Emissions	**Particulate**	**CO**
g/MJ Output	0.00	0.53
g/kg Dry Fuel	0.00	8.74
g/h	0.00	8.98
lb/MM Btu Output	0.00	1.24

Air/Fuel Ratio (A/F)	29.61

VERSION: **2.2** **12/14/2009**

OMNI-Test Laboratories

Manufacturer: Hearth & Home
Model: PP130B
Date: 03/26/18
Run: 1
Control #: 0135PS041E
Test Duration: 180
Output Category: Minimum

Technicians:

Test Results in Accordance with CSA B415.1-09

	HHV Basis	LHV Basis
Overall Efficiency	82.3%	87.9%
Combustion Efficiency	99.5%	99.5%
Heat Transfer Efficiency	83%	88.3%

Output Rate (kJ/h)	10,125	9,605	**(Btu/h)**
Burn Rate (kg/h)	0.60	1.32	**(lb/h)**
Input (kJ/h)	12,309	11,676	**(Btu/h)**

Test Load Weight (dry kg)	1.80	3.97	**dry lb**
MC wet (%)	5.580209612		
MC dry (%)	5.91		
Particulate (g)	0		
CO (g)	39		
Test Duration (h)	3.00		

Emissions	**Particulate**	**CO**
g/MJ Output	0.00	1.28
g/kg Dry Fuel	0.00	21.57
g/h	0.00	12.94
lb/MM Btu Output	0.00	2.97

Air/Fuel Ratio (A/F)	39.63

VERSION: **2.2** **12/14/2009**

OMNI-Test Laboratories, Inc. **ASTM E2779 Pellet Heater Run Sheets**

Client: Hearth & Home Technologies Project Number: 0135PS041E Run Number: 1

Model: ~~PPC~~ 130B Tracking Number: 2266 Date: 3/26/2018

Test Crew: B. Davis

OMNI Equipment ID numbers: 592, 637, 283A, 559, 410, 335, 336, 594, 296-T59, 132

Pellet Heater Run Notes

Air Control Settings

High Burn Rate Target: MAX

Settings: Heat setting MAX (Power Level 5) trim +4

Medium Burn Rate Target: ~ 50%

Settings: ~~Heat setting~~ Power Level Two, Trim Setting +3
Heat setting -3

Low Burn Rate Target: Minimum

Settings: Heat setting "LO" Power Level 1 trim setting Ø

Additional Settings Notes:
N/A

Preburn Notes

Time	Notes
Ø	Heat setting on dial "MAX" Power Level 5 on program. Trim +4

Test Notes

Time	Notes
60	changed front filter, - trim A. Adjusted Heat setting to 3, trim setting +3
180	changed Heat setting to "LO" power Level 1, trim setting Ø

Pellet Moisture Content: 5.91 db

Technician Signature: [signature] Date: 4/9/18

ASTM E2779 Pellet Heater Run Sheets

Client: Hearth & Home Technologies Project Number: 0135PS041E Run Number: 1

Model: PP~~C~~130B Tracking Number: 2266 Date: 3/26/2018

Test Crew: B. Davis

OMNI Equipment ID numbers: 592, 637, 283A, 559, 410, 335, 336, 594, 296-T59, 132

Pellet Heater Supplemental Data

Start Time: 1157 Booth #: E1

Stop Time: 1757

Stack Gas Leak Check:

Initial: good Final: good

Sample Train Leak Check:

A: 0.0 @ 5 "Hg

B: 0.0 @ 5 "Hg

Calibrations: Span Gas CO_2: ~~16.78~~ 16.03/100 CO: ~~4.244~~ ~~5.00~~ 901 ppm

	Pre Test		Post Test	
	Zero	Span	Zero	Span
Time	1133	1133	1759	1759
CO_2	0.00	16.07/0.97	0.00	16.09/0.97
CO	0.000/0	906	0.000/1	902

Air Velocity (ft/min): Initial: ~50 Final: ~50

Scale Audit (lbs): Initial: 10.0 Final: 10.0

Pitot Tube Leak Test: Initial: good Final: good

Stack Diameter (in): 6"

Induced Draft: 0.0

% Smoke Capture: 100%

Flue Pipe Cleaned Prior to First Test in Series:

Date: 3/23/18 Initials: BDavis

	Initial	Middle	Ending
P_b (in/Hg)	30.40	N/A	30.44
Ambient (°F)	71		

Background Filter Volume: 54.966

Tunnel Traverse		
Microtector Reading	dP (in H_2O)	T(°F)
	.048	97
	.052	97
	.052	98
	.038	98
	.036	98
	.050	98
	.054	98
	.046	98
Center:		
	~~.056~~ .060	98
Static:		
	-.20	

Technician Signature: [signature]

Date: 4/9/18

Section 4

Quality Assurance/Quality Control

QUALITY ASSURANCE/QUALITY CONTROL

OMNI follows the guidelines of ISO/IEC 17025, "General Requirements for the Competence of Testing and Calibration Laboratories," and the quality assurance/quality control (QA/QC) procedures found in *OMNI*'s Quality Assurance Manual.

OMNI's scope of accreditation includes, but is not limited to, the following:

- ANSI (American National Standards Institute) for certification of product to safety standards.
- To perform product safety testing by the International Accreditation Service, Inc. (formerly ICBO ES) under accreditation as a testing laboratory designated TL-130.
- To perform product safety testing as a "Certification Organization" by the Standards Council of Canada (SCC).
- Serving as a testing laboratory for the certification of wood heaters by the U.S. Environmental Protection Agency.

This report is issued within the scope of OMNI's accreditation. Accreditation certificates are available upon request.

The manufacturing facilities and quality control system for the production of the PP130-B at Hearth and Home Technologies were evaluated to determine if sufficient to maintain conformance with OMNI's requirements for product certification. OMNI has concluded that the manufacturing facilities, processes, and quality control system are adequate to produce the appliance congruous with the standards and model codes to which it was evaluated.

This report shall not be reproduced, except in full, without the written approval of OMNI-Test Laboratories, Inc.

Sample Analysis

Analysis Worksheets
Moisture Content Worksheet
Fuel Certification Label
Tared Filter, Probe, and O-Ring Data

OMNI-Test Laboratories, Inc. **ASTM E2779 Pellet Heater Run Sheets**

Client: Hearth & Home Technologies Project Number: 0135RS041E Run Number: 1

Model: PF~~C~~130B Tracking Number: 2266 Date: 3/26/2018

Test Crew: B. Davis

OMNI Equipment ID numbers: 592, 637, 283A, 559, 410, 335, 336, 594, 296-T59, 132

ASTM E2515 Lab Sheet

Assembled By:

B Davis

Date/Time in Desiccator:

3/26/18 1815

	Weighing #1	Weighing #2	Weighing #3	Weighing #4	Weighing #5
	Date: 3/29/18	Date: 4/2/18	Date: 4/3/18	Date:	Date:
	Time: 0825	Time: 0802	Time: 0807	Time:	Time:
	R/H %: 15.9	R/H %: 18.2	R/H %: 14.1	R/H %:	R/H %:
	Temp: 70.3	Temp: 69.4	Temp: 71.6	Temp:	Temp:
	Audit: 99998.0	Audit: 99997.9	Audit: 99997.9	Audit:	Audit:
	Initials: BL	Initials: BL	Initials: BL	Initials:	Initials:

Train	Element	ID #	Tare (mg)	Weight (mg)	Weight (mg)	Weight (mg)	Weight (mg)	Weight (mg)
A	Front Filter (60 min)	D469	115.3	116.2	116.2			
A	Front Filter (Remainder)	D470	115.9	117.8	117.7			
A	Rear Filter	D471	114.7	114.5	114.5			
A	Probe	29	114278.3	114278.2	114278.4			
A	O-Ring Set	R574	3294.1	3294.8	3294.5	3294.7		
B	Front Filter	D472	116.4	119.5	119.2	119.3		
B	Rear Filter	D473	116.2	116.0	116.2			
B	Probe	30	114329.2	114329.2	114329.1			
B	O-Ring Set	R575	3381.1	3381.8	3381.3	3381.4		
BG	Filter	D474	116.0	115.9	116.1	116.2		

Technician Signature: _____ Date: 4/9/18

Twin Ports Testing, Inc.
1301 North 3rd Street
Superior, WI 54880
p: 715-392-7114
p: 800-373-2562
f: 715-392-7163
www.twinportstesting.com

Analytical Test Report

Report No: USR:W218-0140-01
Issue No: 1

Client: OMNI-TEST LABORATORIES INC.
13327 NE Airport Way
Portland, OR 97230
Attention: Finance Department

PO No: 180165

Signed:

Stephen Sundeen
Chemistry Laboratory Manager

Date of Issue: 2/27/2018

THIS DOCUMENT SHALL NOT BE REPRODUCED EXCEPT IN FULL

Sample Details

Sample Log No:	W218-0140-01	**Sample Date:**	
Sample Designation:	03208-2018	**Sample Time:**	
Sample Recognized As:	Wood Pellets	**Arrival Date:**	2/13/2018

Test Results

	METHOD	UNITS	MOISTURE FREE	AS RECEIVED
Moisture Total	ASTM E871	wt. %		5.58
Ash	ASTM D1102	wt. %	0.34	0.32
Volatile Matter	ASTM D3175	wt. %		
Fixed Carbon by Difference	ASTM D3172	wt. %		
Sulfur	ASTM D4239	wt. %	0.007	0.007
SO_2	Calculated	lb/mmbtu		0.015
Net Cal. Value at Const. Pressure	ISO 1928	GJ/tonne	19.20	17.99
Net Cal. Value at Const. Pressure	ISO 1928	J/g	19197	17989
Gross Cal. Value at Const. Vol.	ASTM E711	J/g	20523	19377
Gross Cal. Value at Const. Vol.	ASTM E711	Btu/lb	8824	8331
Carbon	ASTM D5373	wt. %	50.70	47.87
Hydrogen*	ASTM D5373	wt. %	6.09	5.75
Nitrogen	ASTM D5373	wt. %	< 0.20	< 0.19
Oxygen*	ASTM D3176	wt. %	> 42.66	> 40.27
Chlorine	ASTM D6721	mg/kg		
Fluorine	ASTM D3761	mg/kg		
Mercury	ASTM D6722	mg/kg		
Bulk Density	ASTM E873	lbs/ft^3		
Fines (Less than 1/8")	TPT CH-P-06	wt.%		
Durability Index	Kansas State	PDI		
Sample Above 1.50"	TPT CH-P-06	wt.%		
Maximum Length (Single Pellet)	TPT CH-P-06	inch		
Diameter, Range	TPT CH-P-05	inch		to
Diameter, Average	TPT CH-P-05	inch		
Stated Bag Weight	TPT CH-P-01	lbs		
Actual Bag Weight	TPT CH-P-01	lbs		

*Note: As received values do not include hydrogen and oxygen in the total moisture.

Comments

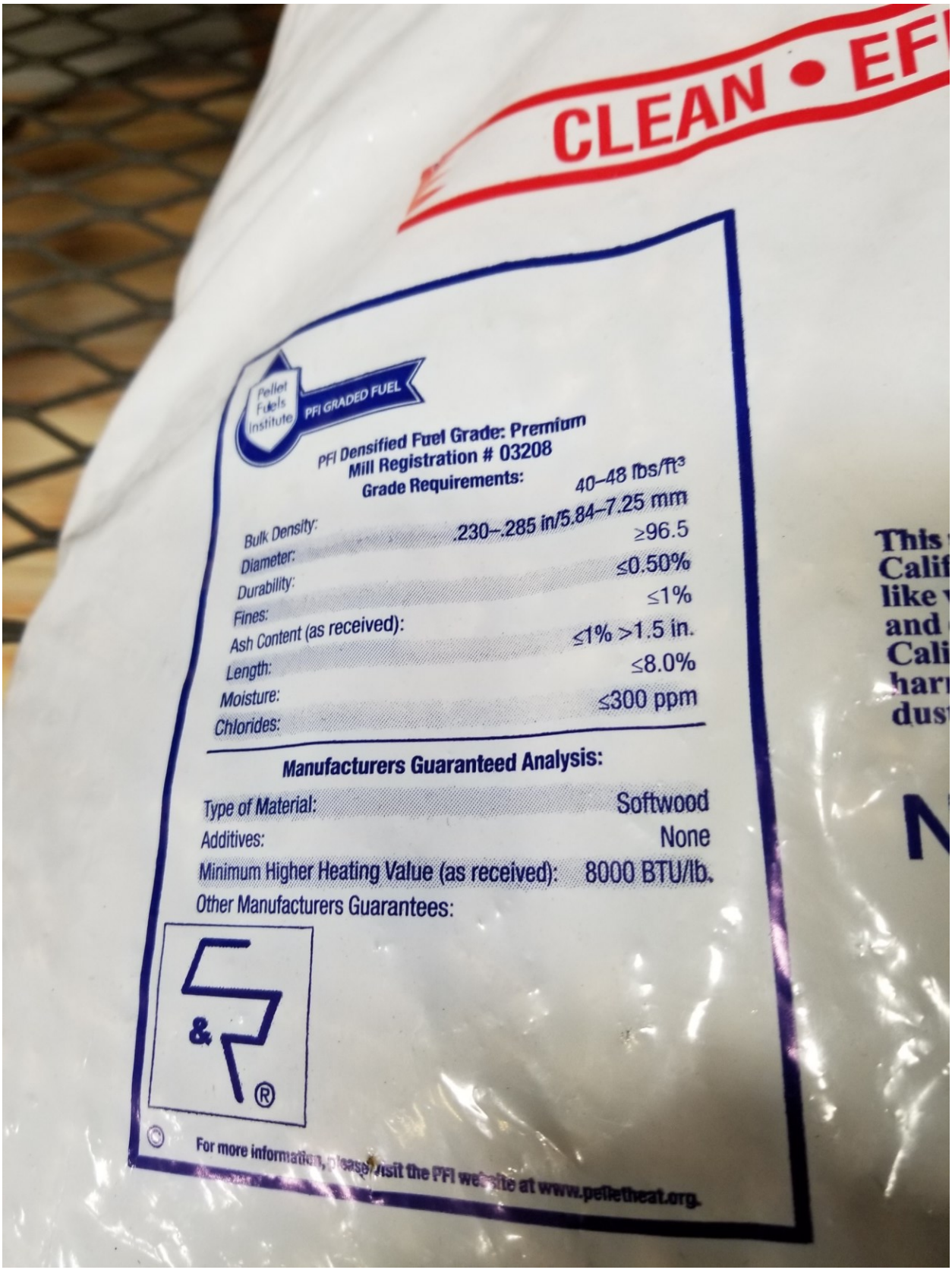
CLEAN • EF
Pellet Fuels Institute
PFI GRADED FUEL
PFI Densified Fuel Grade: Premium
Mill Registration # 03208
Grade Requirements:
Bulk Density: 40–48 lbs/ft³
Diameter: .230–.285 in/5.84–7.25 mm
Durability: ≥96.5
Fines: ≤0.50%
Ash Content (as received): ≤1%
Length: ≤1% >1.5 in.
Moisture: ≤8.0%
Chlorides: ≤300 ppm
Manufacturers Guaranteed Analysis:
Type of Material: Softwood
Additives: None
Minimum Higher Heating Value (as received): 8000 BTU/lb.
Other Manufacturers Guarantees:
For more information, please visit the PFI website at www.pelletheat.org.

Tare Sheet: Probes___ 47mm Filters✓ 100mm Filters___ O-Ring Pair___

Date/time Placed in Dessicator: 3/21/18 1458

Thermohygrometer ID #: Omni-00592

Prepared By: B Davis

Analytical Balance ID #: Omni-00637

Audit Weight ID #/Mass: Omni-00283A / 200 mg

ID #	Date: 3/22/18 Time: ~~0909~~ 1515 RH %: 28.4 T (°F): 69.7 Audit: 200.0	Date: 3/23/18 Time: 0828 RH %: 19.5 T (°F): 68.1 Audit: 200.0	Date: Time: RH %: T (°F): Audit:	Date: Time: RH %: T (°F): Audit:	Date Used	Project Number	Run No.
D469	115.5	115.3			3/26/18	~~0064~~ 0135PS041F	1
D470	115.8	115.9					
D471	114.7	114.7					
D472	116.2	116.4					
D473	116.4	116.2					
D474	116.0	116.0					
D475	115.3	115.3			3/28/18	~~0064~~ 0135PS040F	1
D476	116.2	116.1					
D477	115.0	115.1					
D478	112.7	112.7					
D479	113.2	113.2					
D480	113.3	113.3					
D481	113.6	113.4					
D482	112.9	112.9					
D483	112.6	112.6					
D484	112.2	112.3					
D485	113.3	113.1					
D486	112.3	112.5					
D487	112.7	112.6					
D488	111.6	111.7					
D489	112.9	113.0					
D490	112.1	112.1					
	Initials: BAC	Initials: BAC	Initials:	Initials:			

Final Technician Signature: [signature] Date: 3/23/18

Control No. P-SFDP-0001.xls, Effective date: 9/9/2015

Evaluator signature: [signature]

Tare Sheet: Probes ✓ **47mm Filters**___ **100mm Filters**___ **O-Ring Pair**___

Date/time Placed in Dessicator: 3/5/18 0840

Thermohygrometer ID #: OMNI-00592

Prepared By: B Davis

Analytical Balance ID #: OMNI-00637

Audit Weight ID #/Mass: OMNI-00283A / 100 g

ID #	Date: 3/6/18 Time: 0930 RH %: 9.4 T (°F): 66.4 Audit: 99.9981	Date: ~~0856~~ ~~0856~~ 3/7/18 Time: 0856 RH %: 10.4 T (°F): 67.8 Audit: 99998.1	Date: 3/9/18 Time: 0836 RH %: 12.0 T (°F): 68.3 Audit: 99998.1	Date: Time: RH %: T (°F): Audit:	Date Used	Project Number	Run No.
6	115349.9	115349.6	115349.6	✓			
7	114981.5	114981.5	✓				
8	115593.9	115593.8	✓				
9	115692.5	115692.5	✓				
11	114187.8	114187.7	✓				
13	114321.7	114321.5	✓				
14	114549.6	114549.4	✓				
21	114392.7	114392.5	✓				
22	114344.4	114344.2	✓				
23	114077.6	114077.2	114077.4	✓			
24	114127.3	114127.1	✓				
25	114299.7	114299.6	✓				
28	114751.1	114751.1	✓				
29	114278.4	114278.1	114278.3	✓	3/26/18	~~0061~~ 0135P3041F	1
30	114329.3	114329.2	✓		↓	↓	↓
31	114368.9	114368.9	✓		3/28/18	~~0061~~ 0135P3040F	1
32	114741.5	114741.4	✓		↓	↓	↓
33	113943.9	113943.8	✓				
35	114327.0	114327.1	✓				
36	114884.8	114884.6	✓				
37	114465.4	114465.6	✓				
38	114150.9	114151.0	✓				
	Initials: BR	Initials: BR	Initials: BR	Initials:			

Final Technician Signature: [signature]

Date: 3/14/18

Control No. P-SFDP-0001.xls, Effective date: 9/9/2015

Evaluator signature: [signature]

Tare Sheet: Probes___ 47mm Filters___ 100mm Filters___ O-Ring Pair ✓

Date/time Placed in Dessicator: 3/21/18 3:20

Prepared By: BDAN.S

Analytical Balance ID #: Omni-00637

Thermohygrometer ID #: Omni-00592

Audit Weight ID #/Mass: Omni-00284 1 5g

ID #	Date: 3/22/18 Time: 1530 RH %: 23.4 T (°F): 69.8 Audit: 5000.0	Date: 3/23/18 Time: 0828 RH %: 19.5 T (°F): 68.1 Audit: 5000.0	Date: 3/24/18 Time: 0930 RH %: 19.2 T (°F): 67.2 Audit: 5000.1	Date: 3/27/18 Time: 0913 RH %: 18.2 T (°F): 68.7 Audit: 5000.0	Date Used	Project Number	Run No.
R596	4091.5	4091.0	4090.5	4090.4	3/28/18	~~0061~~ 01358040F	1
R597	3372.2	3371.3	3370.6	3370.6			
R598	3267.3	3266.8	3266.2	3266.1			
R599	4154.6	4153.3	4152.4	4152.2			
R600	3351.5	3350.6	3349.9	3349.8			
R601	3364.9	3364.4	3363.6	3363.3			
R602	3367.7	3366.5	3366.0	3366.2			
R603	3312.2	3311.4	3310.7	3310.8			
R604	3311.9	3311.1	3310.7	3310.7			
R605	3380.8	3378.7	3378.2	3377.1			
R606	4052.8	4052.4	4051.5	4051.9	Not used 4051.8		
R607	3273.2	3272.9	3272.3	3272.4			
R608	~~4123.1~~ 3297.7	3297.0	3296.3	3296.3		Not used.	
R609	4123.1	4122.8	4121.9	4122.2		3 weighed again 4/9/18	
R610	3327.4	3326.7	3325.8	3326.0			
R611	3349.8	3348.9	3348.0	3348.2			
R612	3329.0	3328.2	3327.1	3327.4	Not used 3327.2		
R613	4100.9	4100.7	4099.9	4100.2			
R614	4108.9	4108.4	4107.9	4107.7			
R615	4161.7	4160.9	4160.1	4160.1			
	Initials: AM	Initials: AM	Initials: AM	Initials: AM			

Final Technician Signature: _____ Date: 3/28/18

Control No. P-SFDP-0001.xls, Effective date: 9/9/2015

Evaluator signature: _____ Date: 4/2/202

Tare Sheet: (check one) **Probes**_____ **47mm Filters**_____ **100mm Filters**_____ **O-Ring Pair** ✓

Prepared By: Balance ID #: Thermohygrometer ID #: Audit Weight ID #/Mass: /

Placed in Dessicator: Date: 2/13/18 Time: 1130	Date: 2/19/18 Time: 13:00 RH %: 8.0 T (°F): 71.7 Audit: 1999.7	Date: 2/20/18 Time: 0600 RH %: 6.9 T (°F): 68.1 Audit: 1999.8	Date: 3/14/18 Time: 1430 RH %: 7.7 T (°F): 73.4 Audit: 1999.8	Date: Time: RH %: T (°F): Audit:	Date Used	Project Number	Run No.
ID #							
R573	4136.4	4136.6	-	✓	[redacted]	[redacted]	1
R574	3293.9	3294.3	3294.1	✓	3/26/18	~~0001~~ 0135041E	1
R575	3380.8	3381.1	3381.1	✓	3/26/18	↓	↓
R576	3367.3	3367.5	-	✓			
R577	3334.4	3334.7	3334.6	✓ Not used			
R578	4137.6	4137.8	-	Not used			
R579	3298.9	3299.2	3299.3	✓ Not used			
~~R580~~	~~3348.3~~	~~3348.8~~					
R581	3354.7	3354.7	-	Not used			
~~R582~~	~~3295.2~~	~~3295.7~~	Not Used				
~~R583~~	-	~~3357.9~~					
~~R584~~	-	~~3336.1~~					
~~R585~~	-	~~3406.8~~					
	Initials: A	Initials: A	Initials: A	Initials:			

Final Technician Signature: [signature] Date: 3/14/18 Evaluator signature: [signature]

Control No. P-SFDP-0002.xls, Effective date: 2/1/2017

Calibrations

EPA Method 28R, ASTM E2515, ASTM E2779

ID #	Lab Name/Purpose	Log Name	Attachment Type
132	10 lb Weight	Weight Standard, 10 lb.	Calibration Certificate
185	Platform Scale	Weight Indicator, Model WI-127	Calibration Certificate
209	Barometer	Barometer – Princo	Equipment Record
283A	Audit Weights	Troemner 21pc Msas Set	Calibration Certificate
335	Sample Box / Dry Gas Meter	Apex Automated Emissions Sampling Box	Calibration Log
336	Sample Box / Dry Gas Meter	Apex Automated Emissions Sampling Box	Calibration Log
410	Microtector	Dwyer Microtector	Calibration Certificate
559	Vaneometer	Dwyer Vaneometer	Equipment Record
592	Thermohygrometer	Omega Digital Thermohygrometer	Calibration Log
594	Combustion Gas Analyzer	CAI Gas Analyzer	See Run Sheet
637	Milligram Balance	Analytical Balance - Mettler - Toledo	Calibration Certificate

SCALE WEIGHT CALIBRATION DATA SHEET

Weight to be calibrated: 10 pounds

ID Number: OMNI-00132

Standard Calibration Weight: 10 pounds

ID Number: OMNI-00255

Scale Used: MTW-150K

ID Number: OMNI-00353

Date: 2/23/2018 By: B. Davis

Standard Weight (A) (Lb.)	Weight Verified (B) (Lb.)	Difference (A - B)	% Error
10.0	10.0	0.0	0

*Acceptable tolerance is 1%.

This calibration is traceable to NIST using calibrated standard weights.

Technician signature: _____ Date: 2/23/18

Established 1974

QUALITY CONTROL SERVICES

LABORATORY EQUIPMENT • SALES • SERVICE • CALIBRATION • REPAIRS
2340 SE 11TH Ave. Portland, Oregon 97214 • Box 14831 Portland, Oregon 97293
(503) 236-2712 • FAX (503) 235-2535 • www.qc-services.com

ACCREDITED
Calibration Services
Certificate Number: 1550.01
Laboratory code: 115953

OMNI-Test Laboratories, Inc.
13327 NE Airport Way
Portland, OR 97230

Report Number: OMNE0321676171004

A2LA ACCREDITED
CERTIFICATE OF CALIBRATION WITH DATA

INSTRUMENT INFORMATION

Item	Make	Model	Serial Number	Customer ID	Location
Scale	Weigh-Tronix	WI-127 1000x0.1lb	21676	185	Lab
Units	**Readability**	**SOP**	**Cal Date**	**Last Cal Date**	**Cal Due Date**
lbs	0.1	QC033	10/4/17	10/11/16	10/2018

FUNCTIONAL CHECKS

SHIFT TEST	LINEARITY	REPEATABILITY	ENVIRONMENTAL CONDITIONS
Test Wt: 500 Tol: 0.5	Test Wt: HB44 Tol: HB44	Test Wt: 200 Tol: 0.2	☐ Good ☑ Fair ☐ Poor
As-Found: Pass:☑ Fail:☐	As-Found: Pass:☑ Fail:☐	As-Found: Pass:☑ Fail:☐	Temperature: 21.0°C
As-Left: Pass:☑ Fail:☐	As-Left: Pass:☑ Fail:☐	As-Left: Pass:☑ Fail:☐	

CALIBRATION DATA

Standard	As-Found	As-Left	Expanded Uncertainty
1000	1000.0	1000.0	0.12
700	700.0	700.0	0.12
500	500.0	500.0	0.08
200	200.0	200.0	0.08
100	100.0	100.0	0.05
50	50.0	50.0	0.05

CALIBRATION STANDARDS

Item	Make	Model	Serial Number	Cal Date	Cal Due Date	NIST ID
Avoirdupois Cast W	Rice Lake	25 and 50lb	PWO990-CA	11/4/15	11/2017	20152112

Permanent Information Concerning this Equipment:

Comments/Information Concerning this Calibration

Report prepared/reviewed by: _____ **Date:** 10.4.17 **Technician:** D.Oudeans
Signature: _____

THIS CERTIFICATE SHALL NOT BE REPRODUCED, EXCEPT IN FULL, WITHOUT THE APPROVAL OF QUALITY CONTROL SERVICES, INC.

The uncertainty is calculated according to the ISO Guide to the Expression of Uncertainty in Measurement and includes the uncertainty of standards used combined with the observed standard deviation of the unit under test. The uncertainty is expanded with a k factor of 2 for an approximate 95% level of confidence. Instruments listed above were calibrated using standards traceable to the National Institute of Standards and Technology (NIST). Calibration data reflect results at the time and location of calibration. Calibration data should be reviewed to insure that the instrument is performing to its required accuracy.



453
National
Weather
Service
Type

OMNI 00209

Instruction Booklet

for use with

PRINCO

Fortin type mercurial

Barometers

Manufactured by

PRINCO INSTRUMENTS, INC.
1020 Industrial Blvd.
Southampton, Pa. 18966-4095
U.S.A.

Phone: 215 355-1500
Fax: 215 355-7766

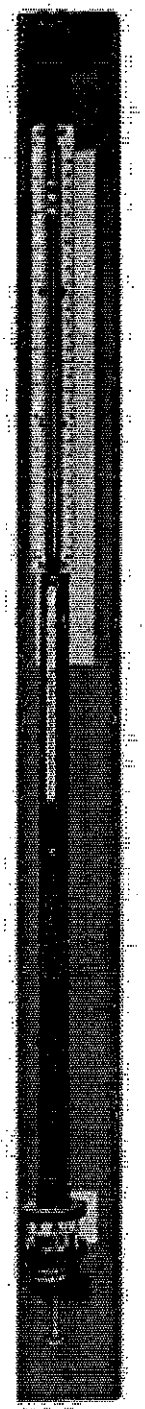

469
NOVA™
Economy
Model

JJ Calibrations, Inc.

Manufacturer: Troemner Inc.
Model: 1mg-100g (Class F)
Nomenclature: Mass Set, 21 Pc.
Serial: 47883

Certificate #: 543402
Date: 09Oct2013
Technician: 34
Calibration Interval: 60 Months

Parameter		Nominal	JJ Standard	UUT	UUT ± Limit	Uncertainty ±
Mass Verification						
Data in mg		1	0.996	1.048	0.100	0.0115
	dot	2	2.002	1.973	0.120	0.0115
		2	2.002	2.048	0.120	0.0115
		5	4.996	5.033	0.170	0.0115
		10	10.000	10.053	0.210	0.0115
	dot	20	19.999	19.966	0.260	0.0115
		20	19.999	20.069	0.260	0.0115
		50	49.998	50.018	0.350	0.0115
		100	99.998	100.144	0.430	0.0115
	dot	200	199.999	200.045	0.540	0.0115
		200	199.999	199.967	0.540	0.0115
		500	499.996	500.334	0.720	0.0115
Data in grams		1		Missing		
	dot	2	2.000000	1.999888	0.0011	0.0000394
		2	2.000000	2.000335	0.0011	0.0000394
		5	5.000002	4.999996	0.0015	0.0000395
		10	9.99998	9.99984	0.0020	0.0000580
	dot	20	19.99999	20.00100	0.0040	0.0000855
		20	19.99999	20.00079	0.0040	0.0000855
		50	49.99997	49.99949	0.0100	0.0001390
		100	99.99999	99.99802	0.0200	0.0002900

Supplement Data Sheet
Bold Italics indicates Out of Tolerance Value.

Thermal Metering System Calibration
Y Factor

Manufacturer:	APEX
Model:	XC-60-EP
Serial Number:	606001
OMNI Tracking No.:	OMNI-00335
Calibrated Orifice:	☐Yes

Previous Calibration Comparision

Date	7/18/2017	Acceptable Deviation (5%)	Deviation
y Factor	0.981	0.04905	0.004
Acceptance	Acceptable		

Current Calibration

Acceptable y Deviation	0.020
Maximum y Deviation	0.005
Acceptable dH@ Deviation	N/A
Maximum dH@ Deviation	N/A
Acceptance	Acceptable

Average Gas Meter y Factor	Orifice Meter dH@
0.977	N/A

Calibration Date:	01/17/18	
Calibrated by:	B. Davis	
Calibration Frequency:	Six months	
Next Calibration Due:	7/18/2018	
Instrument Range:	1.000	cfm
Standard Temp.:	68	oF
Standard Press.:	29.92	"Hg
Barometric Press., Pb:	29.94	"Hg
Signature/Date:		1/18/2018

1/19/2018

Reference Standard *			
Standard Calibrator	Model	Standard Test Meter	
	S/N	OMNI-00001	
	Calib. Date	30-Oct-17	
	Calib. Value	0.9977	y factor (ref)

Calibration Parameters	Run 1	Run 2	Run 3
Reference Meter Pressure ("H2O), Pr	0.00	0.00	0.00
DGM Pressure ("H2O), Pd	2.30	1.38	1.00
Initial Reference Meter	198.1	203.7	214.2
Final Reference Meter	203.602	208.8	222.5
Initial DGM	0	0	0
Final DGM	5.65	5.298	8.67
Temp. Ref. Meter (°F), Tr	68.1	68.1	68.0
Temperature DGM (°F), Td	77.0	78.0	80.0
Time (min)	26.5	31.8	43.5
Net Volume Ref. Meter, Vr	5.502	5.100	8.300
Net Volume DGM, Vd	5.65	5.298	8.67
Gas Meter y Factor =	**0.982**	**0.975**	**0.974**
Gas Meter y Factor Deviation (from avg.)	0.005	0.002	0.003
Orifice dH@	**N/A**	**N/A**	**N/A**
Orifice dH@ Deviation (from avg.)	N/A	N/A	N/A

where:

1. Deviation = |Average value for all runs - current run value|

** 2. y = [Vr x (y factor (ref)) x (Pb + (Pr/ 13.6)) x (Td + 460)]/ [Vd x (Pb + (Pd / 13.6)) x (Tr + 460)]

** 3. dH@ = 0.0317 x Pd / (Pb (Td + 460)) x [(Tr + 460) x time) / Vr]^2

* Reference calibration is traceable to NIST through NIST Test # 40674, Kimble ASTM E1272, or NIST traceable laboratory

** Equations come from EPA Method 5

The uncertainty of measurement is ±0.14 ft^3/min. This is based on the reference standard having a TAR (Test Accuracy Ratio) of at least 4:1.

DIFFERENTIAL PRESSURE GAUGE CALIBRATION DATA SHEET

Instrument to be calibrated: Pressure Transducer

Maximum Range: 0-2" WC ID Number: OMNI-00335

Calibration Instrument: Digital Manometer ID Number: OMNI-00395

Date: 1/17/2018 By: B. Davis

This form is to be used only in conjunction with Standard Procedure C-SPC.

Range of Calibration Point ("WC)	Digital Manometer Input ("WC)	Pressure Gauge Response ("WC)	Difference (Input - Response)	% Error of Full Span*
0-20% Max. Range 0 - 0.4	0.08	0.067	0.013	0.65
20-40% Max. Range 0.4 - 0.8	0.64	0.638	0.002	0.10
40-60% Max. Range 0.8 – 1.2	1.00	1.012	0.012	0.60
60-80% Max. Range 1.2 – 1.6	1.40	1.432	0.032	1.6
80-100% Max. Range 1.6 – 2.0	1.85	1.895	0.045	2.25

*Acceptable tolerance is 4%.

The uncertainty of measurement is ±0.4" WC. This is based on the reference standard having a TAR (Test Accuracy Ratio) of at least 4:1.

Technician signature: _____ Date: 1/18/2018

Reviewed by: _____ Date: 1/19/2018

Temperature Calibration
EPA Method 28R, ASTM 2515

Booth:	Temperature Monitor Type:	Equipment Number:
E1	National Instruments Logger	00335, 00336

Reference Meter Equipment Number: 00373	Calibration Due Date: 7/17/18

Calibration Performed By:	Date:	Ambient Temperature:	Barometric Pressure:
B. Davis	1/17/2018	68	29.87

Input Temperature (F)	Ambient	Meter A	Meter B	Filter A	Filter B	Tunnel	FB Interior
0	1	0	0	1	0	0	0
100	101	100	100	100	100	100	100
300	300	300	300	300	300	300	299
500	500	500	500	500	500	500	499
700	700	700	700	700	700	700	699
1000	1000	1000	1000	1000	1000	1000	1000

Input (F)	FB Top	FB Bottom	FB Back	FB Left	FB Right	Imp A	Imp B	Cat	Stack
0	0	0	0	-1	-1	0	0	0	0
100	100	100	100	99	99	100	100	100	100
300	300	299	299	299	299	300	300	300	299
500	499	499	499	499	499	500	500	500	500
700	699	699	699	699	699	700	700	700	700
1000	1000	999	1000	1000	999	1000	1000	1000	1000
1500								1500	
2000								1999	

Technician signature: _____ Date: 1/17/2018

Reviewed By: _____ Date: 1/19/2018

Thermal Metering System Calibration
Y Factor

Manufacturer:	APEX
Model:	XC-60-EP
Serial Number:	606002
OMNI Tracking No.:	OMNI-00336
Calibrated Orifice:	☐Yes

Previous Calibration Comparision

Date	7/18/2017	Acceptable Deviation (5%)	Deviation
y Factor	0.984	0.0492	0.005
Acceptance	Acceptable		

Current Calibration

Acceptable y Deviation	0.020
Maximum y Deviation	0.003
Acceptable dH@ Deviation	N/A
Maximum dH@ Deviation	N/A
Acceptance	Acceptable

Average Gas Meter y Factor	**Orifice Meter dH@**
0.979	**N/A**

Calibration Date:	01/17/18	
Calibrated by:	B. Davis	
Calibration Frequency:	Six months	
Next Calibration Due:	1/18/2018	
Instrument Range:	1.000	cfm
Standard Temp.:	68	oF
Standard Press.:	29.92	"Hg
Barometric Press., Pb:	29.94	"Hg
Signature/Date:		1/17/2018

1/19/2017

Reference Standard *			
Standard Calibrator	Model	Standard Test Meter	
	S/N	OMNI-00001	
	Calib. Date	30-Oct-17	
	Calib. Value	0.9977	y factor (ref)

Calibration Parameters	Run 1	Run 2	Run 3
Reference Meter Pressure ("H2O), Pr	0.00	0.00	0.00
DGM Pressure ("H2O), Pd	1.95	1.20	0.80
Initial Reference Meter	223.4	231.9	238
Final Reference Meter	231.7	237.9	243.503
Initial DGM	0	0	0
Final DGM	8.517	6.215	5.713
Temp. Ref. Meter (°F), Tr	68.0	69.1	68.6
Temperature DGM (°F), Td	76.0	78.0	79.0
Time (min)	39.8	36.5	37.0
Net Volume Ref. Meter, Vr	8.300	6.000	5.503
Net Volume DGM, Vd	8.517	6.215	5.713
Gas Meter y Factor =	**0.982**	**0.977**	**0.978**
Gas Meter y Factor Deviation (from avg.)	0.003	0.002	0.001
Orifice dH@	**N/A**	**N/A**	**N/A**
Orifice dH@ Deviation (from avg.)	N/A	N/A	N/A

where:

1. Deviation = |Average value for all runs - current run value|

** 2. y = [Vr x (y factor (ref)) x (Pb + (Pr/ 13.6)) x (Td + 460)]/ [Vd x (Pb + (Pd / 13.6)) x (Tr + 460)]

** 3. dH@ = 0.0317 x Pd / (Pb (Td + 460)) x [(Tr + 460) x time) / Vr]^2

* Reference calibration is traceable to NIST through NIST Test # 40674, Kimble ASTM E1272, or NIST traceable laboratory

** Equations come from EPA Method 5

The uncertainty of measurement is ±0.14 ft^3/min. This is based on the reference standard having a TAR (Test Accuracy Ratio) of at least 4:1.

DIFFERENTIAL PRESSURE GAUGE CALIBRATION DATA SHEET

Instrument to be calibrated: Pressure Transducer

Maximum Range: 0-2" WC ID Number: OMNI-00336

Calibration Instrument: Digital Manometer ID Number: OMNI-00395

Date: 1/17/2018 By: B. Davis

This form is to be used only in conjunction with Standard Procedure C-SPC.

Range of Calibration Point ("WC)	Digital Manometer Input ("WC)	Pressure Gauge Response ("WC)	Difference (Input - Response)	% Error of Full Span*
0-20% Max. Range 0 - 0.4	0.35	0.362	0.012	0.6
20-40% Max. Range 0.4 - 0.8	0.65	0.672	0.022	1.1
40-60% Max. Range 0.8 – 1.2	1.00	1.024	0.024	1.2
60-80% Max. Range 1.2 – 1.6	1.30	1.340	0.040	2.0
80-100% Max. Range 1.6 – 2.0	1.70	1.749	0.049	2.45

*Acceptable tolerance is 4%.

The uncertainty of measurement is ±0.4" WC. This is based on the reference standard having a TAR (Test Accuracy Ratio) of at least 4:1.

Technician signature: _____ Date: 1/18/2018

Reviewed by: _____ Date: 1/19/2018

Temperature Calibration
EPA Method 28R, ASTM 2515

Booth:	Temperature Monitor Type:	Equipment Number:
E1	National Instruments Logger	00335, 00336

Reference Meter Equipment Number: 00373	Calibration Due Date: 7/17/18

Calibration Performed By:	Date:	Ambient Temperature:	Barometric Pressure:
B. Davis	1/17/2018	68	29.87

Input Temperature (F)	Ambient	Meter A	Meter B	Filter A	Filter B	Tunnel	FB Interior
0	1	0	0	1	0	0	0
100	101	100	100	100	100	100	100
300	300	300	300	300	300	300	299
500	500	500	500	500	500	500	499
700	700	700	700	700	700	700	699
1000	1000	1000	1000	1000	1000	1000	1000

Input (F)	FB Top	FB Bottom	FB Back	FB Left	FB Right	Imp A	Imp B	Cat	Stack
0	0	0	0	-1	-1	0	0	0	0
100	100	100	100	99	99	100	100	100	100
300	300	299	299	299	299	300	300	300	299
500	499	499	499	499	499	500	500	500	500
700	699	699	699	699	699	700	700	700	700
1000	1000	999	1000	1000	999	1000	1000	1000	1000
1500								1500	
2000								1999	

Technician signature: _____ Date: 1/17/2018

Reviewed By: _____ Date: 1/19/2018

Certificate of Calibration

Certificate Number: **659360**

JJ Calibrations, Inc.
7007 SE Lake Rd
Portland, OR 97267-2105
Phone 503.786.3005
FAX 503.786.2994

0723.01
Calibration

Omni-Test Laboratories
13327 NE Airport Way
Portland, OR 97230

PO: **170149**
Order Date: **09/22/2017**
Authorized By: **N/A**

Property #: **OMNI-00410**
User: **N/A**
Department: **N/A**
Make: **Dwyer**
Model: **1430**
Serial #: **OMNI-00410**
Description: **Microtector**
Procedure: **SEND TO VENDOR**
Accuracy: **±0.00025" WC**

Calibrated on: **10/11/2017**
*Recommended Due: **10/11/2018**
Environment: **19** °C **52** % RH
* As Received: **Limited**
* As Returned: **Limited**
Action Taken: **Calibrated**
Technician: **34**

Remarks: * Many factors may cause the unit to drift out of calibration before the recommended due date. Any reported error is the absolute value between the reference and the unit. Uncertainties include the effects of the unit.

Limited Calibration (est.2016) - Calibrated micrometer head only.

Standards Used

Std ID	Manufacturer	Model	Nomenclature	Due Date	Trace ID
541A	Select	E8FED2	8 Piece Gage Block Set	12/14/2017	635720
103A	Brown & Sharpe	598-81-14	Gage Block Set, 81 pc.	03/16/2019	643452
368A	Rutland	2225-7081	81 Piece Gage Block Set	06/01/2018	649394

Measurement Data

Parameter / Measurement Description	Range	Unit	Reference	Min	Max	[k]Error	UUT	Uncertainty
Before/After								Accredited = ✓
Length								
		Inch	0.1300	0.129	0.131	0.000	0.130 Inch	1.1E-03 ✓
		Inch	0.3850	0.384	0.386	0.000	0.385 Inch	1.1E-03 ✓
		Inch	0.6150	0.614	0.616	0.000	0.615 Inch	1.1E-03 ✓
		Inch	0.8700	0.869	0.871	0.000	0.870 Inch	1.1E-03 ✓
		Inch	1.0000	0.999	1.001	0.000	1.000 Inch	1.1E-03 ✓

JJ Calibrations, Inc. certifies that this instrument has been calibrated in accordance with the JJ Calibrations Quality Assurance Manual with the stated procedure using standards that are traceable to the National Institute of Standards and Technology (NIST), or other National Measurement Institutes (NMI's), or by using natural physical constants, intrinsic standards or ratio calibration techniques. The quality system and this certificate are in compliance with ANSI/NCSL Z540-1-1994, ISO/IEC 17025-2005, ISO 10012-1, the ISO 9000 family and QS 9000. The expanded uncertainties of measurements for this calibration are based upon 95% (2 sigma) confidence limits. Unless otherwise stated, a test accuracy ratio (TAR) of 4:1, if achievable, is maintained. The results reported herein apply only to the calibration of the item described above. This report may not be reproduced, except in full, without prior written consent of JJ Calibrations, Inc.
JJ Calibrations, Inc. quality system has been assessed and accredited to ISO/IEC 17025:2005.

Reviewer

3 Issued 10/13/2017 Rev # 15

Inspector

Calibration Record

Vaneometer Air Velocity Meter OMNI-00559

Calibration Service Record			
Date	**By**	**Results**	**Date of next Calibration**
11/17/17	DQ	Installed New Vane From Manufactured	5/17/18

VWR Temperature Hygrometer Calibration Procedure and Data Sheet

Frequency: Every Two Years

Step 1: Locate NIST traceable standard.

Step 2: Place unit to be calibrated, tracking No. OMNI- 00592 , inside OMNI desiccate box on the same shelf with the NIST traceable standard.

Step 3: After a period of not less than four hours record the temperature and humidity of both units in the spaces provide below.

Step 4: If the unit to be calibrated matches the NIST standard within ± 4%, it is acceptable. If not, the unit needs to be sent to a repair company or replaced.

Verification Data:

Date: 1/8/2018 Technician: B Davis

Time in desiccate: 0910 Recording time: 1335

NIST Standard Temperature: 28.3 °F NIST Standard Humidity: 74.5

Test Unit Temperature Reading: 25.4 °F Test Unit Humidity Reading: 74.3

Test unit OMNI- 00592 is X or was not ___ within acceptable limits.

Technician Signature: B

Comments: Full scale of OMNI-00592 is 90% RH, with a difference of 2.9 this gives a error percentage of 3.22 %. This value is within the allowable 4%.

OMNI Track #	OMNI-00594
Equipment Name/Description	CAI ZRE-4 Gas Analyzer
Equipment S/N:	N5F0112
Comments	CO2, O2, and dual range CO gas analyzer.
Status	Active, calibrate prior to use.
Part #	ZRE-4

Reference Standard:		YES	X	NO	(Check 'X' for answer)

Location of Equipment:	Portable gas cart.
Calibration Vendor	OMNI in house
Type of Calibration	Calibrate Prior to use.
Calibration Period (Months)	N/A
Date of Last Calibration	N/A
Date of Next Calibration	N/A

Do the following:

1) Complete Calibration documentation
2) Complete top half of this form
3) Attach appropriate calibration forms and save in following location
   \\omni-serv\Test Equipment\Equipment\OMNI-XXXXX - Equipment Name
4) Repopulate database with updated information
5) Print, laminate and adhere calibration tag to equipment

Verify before use
OMNI-00594
Gas Analyzer

Verify before use
OMNI-00594
Gas Analyzer

Certificate of Calibration

Certificate Number: **668066**

JJ Calibrations, Inc.
7007 SE Lake Rd
Portland, OR 97267-2105
Phone 503.786.3005
FAX 503.786.2994

Omni-Test Laboratories
13327 NE Airport Way
Portland, OR 97230

OnSite

0723.01
Calibration

PO: **180161**
Order Date: **02/06/2018**
Authorized By: **N/A**

Property #: **OMNI-00637**
User: **N/A**
Department: **N/A**
Make: **Mettler Toledo**
Model: **MS104TS/00**
Serial #: **B729400181**
Description: **Analytical Scale, 120g**
Procedure: **DCN 500887**
Accuracy: **±0.0005g**

Calibrated on: **02/06/2018**
*Recommended Due: **08/06/2018**
Environment: **20 °C 53 % RH**
* As Received: **Within Tolerance**
* As Returned: **Within Tolerance**
Action Taken: **Calibrated**
Technician: **111**

Remarks: * Many factors may cause the unit to drift out of calibration before the recommended due date. Any reported error is the absolute value between the reference and the unit. Uncertainties include the effects of the unit.

Standards Used

Std ID	Manufacturer	Model	Nomenclature	Due Date	Trace ID
503A	Rice Lake	1mg-200g (Class 0)	Mass Set,	04/20/2018	642578

Measurement Data

Parameter / Measurement Description	Range Unit	Reference	Min	Max	*Error	UUT	Uncertainty
Before/After							Accredited = ✓
Force							
	g	10.00000	9.9995	10.0005	0.0001	10.0001 g	5.7E-04 ✓
	g	30.00000	29.9995	30.0005	0.0003	30.0003 g	5.7E-04 ✓
	g	60.00000	59.9995	60.0005	0.0001	60.0001 g	5.7E-04 ✓
	g	90.00000	89.9995	90.0005	0.0001	89.9999 g	5.7E-04 ✓
	g	120.00000	119.9995	120.0005	0.0002	119.9998 g	5.7E-04 ✓

JJ Calibrations, Inc. certifies that this instrument has been calibrated in accordance with the JJ Calibrations Quality Assurance Manual with the stated procedure using standards that are traceable to the National Institute of Standards and Technology (NIST), or other National Measurement Institutes (NMI's), or by using natural physical constants, intrinsic standards or ratio calibration techniques. The quality system and this certificate are in compliance with ANSI/NCSL Z540-1-1994, ISO/IEC 17025-2005, ISO 10012-1, the ISO 9000 family and QS 9000. The expanded uncertainties of measurements for this calibration are based upon 95% (2 sigma) confidence limits. Unless otherwise stated, a test accuracy ratio (TAR) of 4:1, if achievable, is maintained. The results reported herein apply only to the calibration of the item described above. This report may not be reproduced, except in full, without prior written consent of JJ Calibrations, Inc.
JJ Calibrations, Inc. quality system has been assessed and accredited to ISO/IEC 17025:2005.

Reviewer 3 Issued Rev # 15 Inspector

Example Calculations

Equations and Sample Calculations – ASTM E2779 & E2515

Manufacturer:	Hearth & Home
Model:	PP70
Run:	1
Category:	[Integrated]

Equations used to calculate the parameters listed below are described in this appendix. Sample calculations are provided for each equation. The raw data and printout results from a sample run are also provided for comparison to the sample calculations.

M_{Bdb} – Weight of test fuel burned during test run, dry basis, kg

M_{BSidb} – Weight of test fuel burned during test run segment *i* , dry basis, kg

BR – Average dry burn rate over full integrated test run, kg/hr

BR_{Si} – Average dry burn rate over test run segment *i* , kg/hr

V_s – Average gas velocity Dry burn rate, kg/hr

Q_{sd} – Average gas flow ra Total particulate matter collected, mg

$V_{m(std)}$ – Volume of Gas S Volume of gas sampled corrected to standard conditions, dscf

m_n – Total Particulate Ma Average dilution tunnel gas velocity, ft/sec

C_s - Concentration of part Particulate concentration, g/dscf

E_T – Total Particulate Em Dilution tunnel gas flow rate, dscf/min

PR - Proportional Rate Va Particulate emission rate, lbs/hr

PM_R – Average particulat Total particulate emissions, grams

PM_F – Average particulat Average fuel load moisture content, %

M_{Bdb} – Weight of test fuel burned during test run, dry basis, kg
ASTM E2779 equation (1)

$$M_{Bdb} = (M_{Swb} - M_{Ewb})(100/(100 + FM))$$

Where,

FM = average fuel moisture of test fuel, % dry basis
M_{Swb} = weight of test fuel in hopper at start of test run, wet basis, kg
M_{Ewb} = weight of test fuel in hopper at end of test run, wet basis, kg

Sample Calculation:

5.9 %
M_{Swb} = 41.5 lbs
M_{Ewb} = 28.5 lbs
0.4536 = Converstion factor from lbs to kg

M_{Bdb} = [(41.5 x 0.4536) - (28.5 x 0.4536)] (100/(100 + 5.91)

M_{Bdb} = **5.6** kg

M_{BSidb} – Weight of test fuel burned during test run segment *i*, dry basis, kg
ASTM E2779 equation (2)

$$M_{BSidb} = (MS_{Siwb} - M_{ESiwb})(100/(100 + FM))$$

Where,

M_{SSiwb} = weight of test fuel in hopper at start of test run segment *i*, wet basis, kg

M_{ESiwb} = weight of test fuel in hopper at end of test run segment *i*, wet basis, kg

Sample Calculation (from medium burn rate segment):

FM = 5.9 %

M_{SSiwb} = 36.4 lbs

M_{ESiwb} = 32.7 lbs

0.4536 = Converstion factor from lbs to kg

M_{BSidb} = [(36.4 x 0.4536) - (32.7 x 0.4536)] (100/(100 + 6)

M_{BSidb} = **1.6** kg

BR – Average dry burn rate over full integrated test run, kg/hr
ASTM E2779 equation (3)

$$BR = \frac{60\ M_{Bdb}}{\theta}$$

Where,

θ = Total length of full intergrated test run, min

Sample Calculation:

M_{Bdb} = 5.57 kg

θ = 360 min

$$BR = \frac{60 \times 5.57}{360}$$

BR = **0.93** kg/hr

BR_{Si} – Average dry burn rate over test run segment *i*, kg/hr
ASTM E2779 equation (4)

$$BR_{Si} = \frac{60\ M_{BSidb}}{\theta_{Si}}$$

Where,

θ_{Si} = Total length of test run segment *i*, min

Sample Calculation (from medium burn rate segment):

M_{BSidb} = 1.58 kg

θ = 120 min

$$BR = \frac{60 \times 1.58}{120}$$

BR = **0.79** kg/hr

V_s – Average gas velocity in the dilution tunnel, ft/sec
ASTM E2515 equations (9)

$$V_s = F_p \times K_p \times C_P \times \left(\sqrt{\Delta P}\right)_{avg} \times \sqrt{\frac{T_s}{P_s \times M_s}}$$

Where:

F_p = Adjustment factor for center of tunnel pitot tube placement, $Fp = \frac{V_{strav}}{V_{scent}}$, ASTM E2515 Equation (1)

v_{scent} = Dilution tunnel velocity calculated after the multi-point pitot traverse at the center, ft/sec

v_{strav} = Dilution tunnel velocity calculated after the multi-point pitot traverse, ft/sec

k_p = Pitot tube constant, 85.49

C_p = Pitot tube coefficient: 0.99, unitless

ΔP* = Velocity pressure in the dilution tunnel, in H_2O

T_s = Absolute average gas temperature in the dilution tunnel, °R; (°R = °F + 460)

P_s = Absolute average gas static pressure in diltuion tunnel, = $P_{bar} + P_g$, in Hg

P_{bar} = Barometric pressure at test site, in. Hg

P_g = Static pressure of tunnel, in. H_20; (in Hg = in H_20/13.6)

M_s = **The dilution tunnel wet molecular weight; M_s = 28.78 assuming a dry weight of 29 lb/lb-mole

Sample calculation:

$$Fp = \frac{14.33}{15.59} = 0.919$$

$$V_s = 0.919 \times 85.49 \times 0.99 \times 0.241 \times \left(\frac{81.7 + 460}{\left(30.51 + \frac{-0.20}{13.6}\right) \times 28.78} \right)^{1/2}$$

V_s = **14.73** ft/s

*The ASTM test standard mistakenly has the square root of the average delta p instead of the average of the square root of delta p. The current EPA Method 2 is also incorrect. This was verified by Mike Toney at EPA.

**The ASTM test standard mistakenly identifies Ms as the dry molecular weight. It should be the wet molecular weight as indicated in EPA Method 2.

Q_{sd} – Average gas flow rate in dilution tunnel, dscf/hr
ASTM E2515 equation (3)

$$Q_{sd} = 3600 \times (1 - B_{ws}) \times v_s \times A \times \frac{T_{std}}{T_s} \times \frac{P_s}{P_{std}}$$

Where:

3600	=	Conversion from seconds to hours (ASTM method uses 60 to convert in minutes)
B_{ws}	=	Water vapor in gas stream, proportion by volume; assume 2%
A	=	Cross sectional area of dilution tunnel, ft^2
T_{std}	=	Standard absolute temperature, 528 °R
P_s	=	Absolute average gas static pressure in diltuion tunnel, = P_{bar} + P_g , in Hg
T_s	=	Absolute average gas temperature in the dilution tunnel, °R; (°R = °F + 460)
P_{std}	=	Standard absolute pressure, 29.92 in Hg

Sample calculation:

$$Q_{sd} = 3600 \times (1 - 0.02) \times 14.73 \times 0.196 \times \frac{528}{81.7 + 460} \times \frac{30.5 + \frac{-0.20}{13.6}}{29.92}$$

Q_{sd} = **#####** dscf/hr

$V_{m(std)}$ – Volume of Gas Sampled Corrected to Dry Standard Conditions, dscf

ASTM E2515 equation (6)

$$V_{m(std)} = K_1 \times V_m \times Y \times \frac{P_{bar} + \left(\frac{\Delta H}{13.6}\right)}{T_m}$$

Where:

K_1	=	17.64 °R/in. Hg
V_m	=	Volume of gas sample measured at the dry gas meter, dcf
Y	=	Dry gas meter calibration factor, dimensionless
P_{bar}	=	Barometric pressure at the testing site, in. Hg
ΔH	=	Average pressure differential across the orifice meter, in. H_2O
T_m	=	Absolute average dry gas meter temperature, °R

Sample Calculation:

Using equation for Train 1:

$$V_{m(std)} = 17.64 \times 59.062 \times 0.977 \times \frac{\left(30.51 + \frac{1.33}{13.6}\right)}{(82.2 + 460)}$$

$V_{m(std)}$ = **57.456** dscf

Using equation for Train 2:

$$V_{m(std)} = 17.64 \times 57.071 \times 0.979 \times \frac{\left(30.51 + \frac{1.04}{13.6}\right)}{(82.5 + 460)}$$

$V_{m(std)}$ = **55.560** dscf

Using equation for ambient train:

$$V_{m(std)} = 17.64 \times 55.10 \times 0.997 \times \frac{\left(\underline{30.51} + \frac{0.00}{13.6}\right)}{(73.3 + 460)}$$

$V_{m(std)}$ = **55.430** dscf

m_n – Total Particulate Matter Collected, mg
ASTM E2515 Equation (12)

$$m_n = m_p + m_f + m_g$$

Where:

m_p = mass of particulate matter from probe, mg

m_f = mass of particulate matter from filters, mg

m_g = mass of particulate matter from filter seals, mg

Sample Calculation:

Using equation for Train 1 (first hour):

m_n = 0.0 + 0.9 + 0.0

m_n = 0.9 mg

Using equation for Train 1 (remainder):

m_n = 0.0 + 1.5 + 0.3

m_n = 1.8 mg

Train 1 Aggregate = **2.7** mg

Using equation for Train 2:

m_n = 0.0 + 2.8 + 0.0

m_n = **2.8** mg

C_s - Concentration of particulate matter in tunnel gas, dry basis, corrected to standard conditions, g/dsc
ASTM E2515 equation (13)

$$C_s = K_2 \times \frac{m_n}{V_{m(std)}}$$

Where:

K_2	=	Constant, 0.001 g/mg
m_n	=	Total mass of particulate matter collected in the sampling train, mg
$V_{m(std)}$	=	Volume of gas sampled corrected to dry standard conditions, dscf

Sample calculation:

For Train 1:

$$C_s = 0.001 \times \frac{2.7}{57.46}$$

C_s = **0.00005** g/dscf

For Train 2

$$C_s = 0.001 \times \frac{2.8}{55.56}$$

C_s = **0.00005** g/dscf

For Ambient Train

$$C_r = 0.001 \times \frac{0.0}{55.43}$$

C_r = **0.000000** g/dscf

E_T – Total Particulate Emissions, g
ASTM E2515 equation (15)

$$E_T = (c_s - c_r) \times Q_{std} \times \theta$$

Where:

C_s	=	Concentration of particulate matter in tunnel gas, g/dscf
C_r	=	Concentration particulate matter room air, g/dscf
Q_{std}	=	Average dilution tunnel gas flow rate, dscf/hr
θ	=	Total time of test run, minutes

Sample calculation:

For Train 1

E_T = (0.000047 - 0.000000) x ###### x 360 /60

E_T = 2.86 g

For Train 2

E_T = (0.000050 - 0.000000) x ###### x 360 /60

E_T = 3.06 g

Average

E = 2.96 g

Total emission values shall not differ by more than 7.5% from the total average emissions

7.5% of the average =	0.22
Train 1 difference =	0.10
Train 2 difference =	0.10

PR - Proportional Rate Variation
ASTM E2515 equation (16)

$$PR = \left[\frac{\theta \times V_{mi} \times V_s \times T_m \times T_{si}}{\theta_i \times V_m \times V_{si} \times T_{mi} \times T_s} \right] \times 100$$

Where:

θ = Total sampling time, min

θ_i = Length of recording interval, min

V_{mi} = Volume of gas sample measured by the dry gas meter during the “ith” time interval, dcf

V_m = Volume of gas sample as measured by dry gas meter, dcf

V_{si} = Average gas velocity in the dilution tunnel during the "ith" time interval, ft/sec

V_s = Average gas velocity in the dilution tunnel, ft/sec

T_{mi} = Absolute average dry gas meter temperature during the "ith" time interval, ^oR

T_m = Absolute average dry gas meter temperature, ^oR

T_{si} = Absolute average gas temperature in the dilution tunnel during the "ith" time interval, ^oR

T_s = Absolute average gas temperature in the dilution tunnel, ^oR

Sample calculation (for the first 1 minute interval of Train 1):

$$PR = \left(\frac{360 \times 1.615 \times 14.73 \times (93.0 + 460) \times (82.2 + 460)}{10 \times 59.06 \times 14.48 \times (81.7 + 460) \times (75.0 + 460)} \right) \times 100$$

PR = 104 %

PM_R – Average particulate emissions for full integrated test run, g/hr
ASTM E2779 equation (5)

$$PM_R = 60 (E_T/\theta)$$

Where,

E_T = Tota particulate emissions, grams

θ = Total length of full intergrated test run, min

Sample Calculation:

E_T (Dual train average) = 2.96 g

θ = 360 min

$PM_R = 60$ x (2.96 / 360)

PM_R = **0.49** g/hr

PM_F – Average particulate emission factor for full integrated test run, g/dry kg of fuel burned
ASTM E2779 equation (6)

$$PM_F = E_T/M_{Bdb}$$

Where,

E_T = Tota particulate emissions, grams

M_{Bdb} = Weight of test fuel burned during test run, dry basis, kg

Sample Calculation:

E_T (Dual train average) = 2.96 g

M_{Bdb} = 5.57 kg

PM_F = 2.96 / 5.57)

PM_F = **0.53** g/kg

Section 5

Labeling & Owner's Manual(s)

CAUTION: HOT WHILE IN OPERATION DO NOT TOUCH, KEEP CHILDREN, CLOTHING AND FURNITURE AWAY. CONTACT MAY CAUSE SKIN BURNS. SEE NAMEPLATE AND INSTRUCTIONS.

ATTENTION: CHAUD LORS DE L'OPÉRATION. NE PAS TOUCHER. GARDEZ LES ENFANTS ET LES VÊTEMENTS LOIN DE L'ESPACE DÉSIGNÉ DE L'INSTALLATION. LE CONTACT PEUT CAUSER DES BRÛLURES À LA PEAU. VOIR L'ÉTIQUETTE ET LES INSTRUCTIONS.

EM

C OTL US

Report: 0135PS041S
Report: 0135PS041E

PP130-B Pellet Stove

SERIAL NO. / NUMÉRO DU
HC079 room for .14 x .875" S/N

1.5" x .375 Barcode Label

Listed Solid Fuel Room Heater/Pellet Type. Also suitable for Mobile Home Installation. This appliance has been tested and listed for use in Manufactured Homes in accordance with OAR 814-23-9000 through 814-23-909.

Appareil de chauffage de combustible solide/de type de boulettes. Accepté dans l'installation dans les maisons mobiles. Cet appareil a été testé et enregistré pour l'usage dans les Maisons Mobiles en accord avec OAR 814-23-9000 jusqu'à 814-23-909.

Listado de habitaciones de combustible sólido del calentador / Pellet Tipo. También es adecuado para la instalación de casas móviles. Este aparato ha sido probado y certificado para su uso en casas prefabricadas, de conformidad con OAR 814-23-9000 través de 814-23-909.

PREVENT HOUSE FIRES / PRÉVENTION DES FEUX DE MAISON

Install and use only in accordance with manufacturer's installation and operating instructions. Contact local building or fire officials about restrictions and installations inspection in your area.
WARNING - FOR MOBILE HOMES: Do not install appliance in a sleeping room. An outside combustion air inlet must be provided. The structural integrity of the mobile home floor, ceiling and walls must be maintained. Refer to manufacturer's instructions and local codes for precautions required for passing chimney through a combustible wall or ceiling. Inspect and clean vent system frequently in accordance with manufacturer's instructions. DO NOT CONNECT THIS UNIT TO A CHIMNEY SERVING ANOTHER APPLIANCE. Use a 3" or 4" diameter type "L" or "PL" venting system.

Installez et utilisez en accord avec les instructions d'installation et d'opération du fabricant. Contactez le bureau de la construction ou le bureau des incendies au sujet des restrictions et des inspections d'installation dans votre voisinage. Ne pas obstruez l'espace en dessous de l'appareil.
AVIS - Pour Les Maisons Mobiles: Ne pas installer dans une chambre à coucher. Un tuyau extérieur de combustion d'air doit être installé et ne doit pas être obstrué lorsque l'appareil est en usage. La structure intégrale du plancher, du plafond et des murs de la maison mobile doit être maintenue intacte. Référez vous aux instructions du fabricant et des codes locaux pour les précautions requises pour passer une cheminée à travers un mur ou un plafond combustibles, et les compensations maximums. Inspectez et nettoyez la cheminée fréquemment. Ne pas connecter cet appareil à une cheminée servant un autre appareil. Utilisez systèm de ventilation "L" ou "P" diamètre 76mm ou 102mm

Instale y use únicamente de acuerdo con la instalación del fabricante y las instrucciones de funcionamiento. Póngase en contacto con la construcción o de los bomberos sobre las restricciones y la inspección en nuestra área.
ADVERTENCIA - Para las casas móviles: No instale el aparato en una habitación para dormir. Una entrada de aire de combustión exterior debe ser proporcionada. La integridad estructural de la planta de casas móviles, techos y paredes deben ser mantenidos.
Consulte las instrucciones del fabricante y los códigos locales para la precauciones necesarias para pasar a través de una chimenea de pared o techo combustible. Inspeccione y limpie el sistema de ventilación con frecuencia, de conformidad con las instrucciones del fabricante. NO conecte esta unidad a UNA CHIMENEA DE SERVICIO otro aparato. Use un 3 "o 4" de diámetro tipo "L" o "PL" sistema de ventilación.

Conforms to ASTM Std E1509-12 (R2017). Certified to ULC S627-00. Room Heating Pellet BurningType, (UM) 84-HUD FOR USE ONLY WITH PELLETIZED WOOD FUEL. Do not use any other type of fuel.

Input Rating: 49,207 Btu's/hr. Electrical Rating:120 VAC, 60 Hz, Start 2.6 Amps, Run 2.3 AMPS. Route power cord away from unit. Do not route cord under or in front of appliance. Do not obstruct the space beneath the heater.

DANGER: Risk of electrical shock. Disconnect power supply before servicing. Replace glass only with 5mm ceramic. To start, turn dial control to desired setting, the stove will light automatically. To shutdown, turn dial control to off position. For further instruction refer to owner's manual. Keep viewing doors tightly closed during operation.

Conforme à la norme ASTM E1509-12 (R2017) Std. Certifié à la norme ULC S627-00 Std. Room Heating Pellet Burning Type, (UM) 84-HUD POUR USAGE AVEC LES BOULETTES DE BOIS. N'utiliser aucun autre genre de combustible.

Puissance de Rendement: 49,207 Btu's/hr. Puissance Électrique: 120 VAC, 60 Hz, Début 2.6 Amps, Courir 2,3 Amps, Éloignez le fil électrique de l'appareil. Ne pas faire passer le fil électrique au dessus ou en dessous de l'appareil. Ne pas bloquer l'espace au dessous de l'appareil.

DANGER: Il y a risque de décharge électrique. Déconnectez le fil électrique de la prise de contact avant le service. Remplacez la vitre seulement avec une vitre céramique de 5 mm disponible chez votre fournisseur. Pour commencer, tourner le cadran de commande au réglage désiré, le poêle s'allume automatiquement. Pour l'arrêt, tourner le cadran de commande en position OFF. Pour des instructions supplémentaires, référez vous au manuel du propriétaire. Gardez la porte d'ouverture et la porte des cendres fermées hermétiquement durant l'opération.

Cumple con la norma ASTM Std E1509-12 (R2017). Certificado de ULC S627-00 Std, cuarto de la calefacción de pellets BurningType, (UM), de 84 de HUD PARA USO EXCLUSIVO CON COMBUSTIBLE DE MADERA granulado. No utilice ningún otro tipo de combustible.

Clasificación de entrada: 49,207 BTU / hr. Clasificación eléctrica: 120 VAC, 60 Hz, 2,6 amperios Inicio, Ejecutar 2,3 amperios. Pase el cable de alimentación alejado de la unidad. No encamine el cordón por debajo o por delante del aparato. No obstruya el espacio debajo de la estufa.

PELIGRO: Riesgo de choque eléctrico. Desconecte el suministro eléctrico antes de darle servicio. Reemplace los vidrios sólo con cerámica de 5 mm. Para comenzar, gire el dial de control hasta la posición deseada, la estufa se encenderá automáticamente. Para apagar, gire el dial de control para la posición de apagado. Para obtener más instrucciones, consulte el manual del propietario. Mantenga las puertas de ver bien cerrados durante la operación.

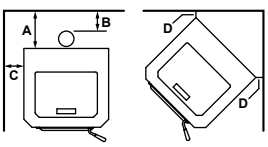

MINIMUM CLEARANCES TO COMBUSTIBLE MATERIALS / ESPACES LIBRES MINIMUM DES MATÉRIAUX
DISTANCIAS MÍNIMAS a los materiales combustibles

A	Back Wall / Mur Arrière / Muro Posterior	(horizontal installation)	3 in [76 mm]
B	Flue Pipe / Conduit de fumée / Cañón de Humos		3 in [76 mm]
C	Side Wall / Mur De Côté / Muro Lateral		9 in [229 mm]
CORNER INSTALLATION / INSTALLATION DU COIN / RINCÓN DE LA INSTALACIÓN			
D	Side Wall / Mur De Côté / Muro Lateral		3 in [76 mm]

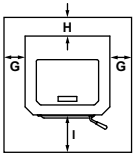

USA
G = 2 in
H* = 2 in
I = 6 in

CANADA
G = 203 mm
H* = 51 mm
I = 152 mm

FLOOR PROTECTION / PROTECTION DU SOL / PISO DE PROTECCION

Floor protector must be non-combustible material, extending beneath heater and to the front/sides/rear as indicated. Measure front distance (I) from the surface of the glass door.

Le poêle doit être placé sur une assise non combustible s'étendant tout autour de lui, comme les schémas l'indiquent. Mesurez la distance du devant (I) de la surface de la porte vitrée.

Protector de piso debe ser de material incombustible, se extiende por debajo del calentador y al frente / lado / trasero, como se indica. Medir la distancia frontal (I) de la superficie de la puerta de vidrio.

*Non-combustible floor protection must extend 2 inches (51mm) beneath the flue pipe when installed with horizontal venting or under the Top Vent Adapter with vertical installation. RECOMMENDED IN USA; REQUIRED IN CANADA.

*Un protecteur incombustible de plancher doit s'étendre 2 inches (51mm) sous le conduit de cheminée pour une installation de ventilation horizontale ou sous un adapteur de ventilation de dessus pour une installation verticale. RECOMMANDÉ AUX ÉTATS-UNIS; NÉCESSAIRE AU CANADA.

* No es combustible mínimo de protección debe extenderse 2 pulgadas (51mm) por debajo del conducto de humos cuando se instalan con la ventilación horizontal o en el adaptador de ventilación superior con instalación vertical. RECOMENDADO EN EE.UU.; REQUERIDA EN CANADÁ.

U.S. ENVIRONMENTAL PROTECTION AGENCY

Certified to comply with 2020 particulate emission standards at 0.53 g/hr EPA method 28 and 5G. This wood heater needs periodic inspection and repair for proper operation. Consult the owner's manual for further information. It is against federal regulations to operate this wood heater in a manner inconsistent with the operating instructions in the owner's manual.

2018	2019	2020	JAN	FEB	MAR	APR	MAY	JUN	JUL	AUG	SEP	OCT	NOV	DEC
☐	☐	☐	☐	☐	☐	☐	☐	☐	☐	☐	☐	☐	☐	☐

7104-205A

HEARTH & HOME technologies

Hearth & Home Technologies®
352 Mountain House Road
Halifax, PA 17032

1.877.427.3316
www.pelprostoves.com

DO NOT REMOVE THIS LABEL / NE PAS ENLEVER L'ÉTIQUETTE

Made in China / Fabriqué en Chine

CAUTION: HOT WHILE IN OPERATION DO NOT TOUCH. KEEP CHILDREN, CLOTHING AND FURNITURE AWAY. CONTACT MAY CAUSE SKIN BURNS. SEE NAMEPLATE AND INSTRUCTIONS.

ATTENTION: CHAUD LORS DE L'OPÉRATION. NE PAS TOUCHER. GARDEZ LES ENFANTS ET LES VÊTEMENTS LOIN DE L'ESPACE DÉSIGNÉ DE L'INSTALLATION. LE CONTACT PEUT CAUSER DES BRÛLURES À LA PEAU. VOIR L'ÉTIQUETTE ET LES INSTRUCTIONS.

c UL us LISTED
Solid Fuel Type Room Heater
Issue No. MH60687

Outfitter-II Pellet Stove

Serial No. / Nº de série: VN

BARCODE LABEL

Listed Solid Fuel Room Heater/Pellet Type. Also suitable for Mobile Home Installation. This appliance has been tested and listed for use in Manufactured Homes in accordance with OAR 814-23-9000 through 814-23-909.

Appareil de chauffage de combustible solide/de type de boulettes. Accepté dans l'installation dans les maisons mobiles. Cet appareil a été testé et enregistré pour l'usage dans les Maisons Mobiles en accord avec OAR 814-23-9000 jusqu'à 814-23-909.

Listado de habitaciones de combustible sólido del calentador / Pellet Tipo. También es adecuado para la instalación de casas móviles. Este aparato ha sido probado y certificado para su uso en casas prefabricadas, de conformidad con OAR 814-23-9000 través de 814-23-909.

PREVENT HOUSE FIRES / PRÉVENTION DES FEUX DE MAISON

Install and use only in accordance with manufacturer's installation and operating instructions. Contact local building or fire officials about restrictions and installations inspection in your area.

WARNING - FOR MOBILE HOMES: Do not install appliance in a sleeping room. An outside combustion air inlet must be provided. The structural integrity of the mobile home floor, ceiling and walls must be maintained. Refer to manufacturer's instructions and local codes for precautions required for passing chimney through a combustible wall or ceiling. Inspect and clean vent system frequently in accordance with manufacturer's instructions. DO NOT CONNECT THIS UNIT TO A CHIMNEY SERVING ANOTHER APPLIANCE. Use a 3" or 4" diameter type "L" or "PL" venting system.

Installez et utilisez en accord avec les instructions d'installation et d'opération du fabricant. Contactez le bureau de la construction ou le bureau des incendies au sujet des restrictions et des inspections d'installation dans votre voisinage. Ne pas obstruez l'espace en dessous de l'appareil.

AVIS - Pour Les Maisons Mobiles: Ne pas installer dans une chambre à coucher. Un tuyau extérieur de combustion d'air doit être installé et ne doit pas être obstrué lorsque l'appareil est en usage. La structure intégrale du plancher, du plafond et des murs de la maison mobile doit être maintenue intacte. Référez vous aux instructions du fabricant et des codes locaux pour les précautions requises pour passer une cheminée à travers un mur ou un plafond combustibles, et les compensations maximums. Inspectez et nettoyez la cheminée fréquemment. Ne pas connecter cet appareil à une cheminée servant un autre appareil. Utilisez systèm de ventilation "L" ou "P" diamètre 76mm ou 102mm

Instale y use únicamente de acuerdo con la instalación del fabricante y las instrucciones de funcionamiento. Póngase en contacto con la construcción o de los bomberos sobre las restricciones y la inspección en nuestra área.

Conforms to ASTM Std E1509-12 (R2017). Certified to ULC S627-00. Room Heating Pellet BurningType, (UM) 84-HUD FOR USE ONLY WITH PELLETIZED WOOD FUEL. Do not use any other type of fuel.

Input Rating: 49,207 Btu's/hr. Electrical Rating:120 VAC, 60 Hz, Start 2.6 Amps, Run 2.3 AMPS. Route power cord away from unit. Do not route cord under or in front of appliance. Do not obstruct the space beneath the heater.

DANGER: Risk of electrical shock. Disconnect power supply before servicing. Replace glass only with 5mm ceramic. To start, turn dial control to desired setting, the stove will light automatically. To shutdown, turn dial control to off position. For further instruction refer to owner's manual. Keep viewing doors tightly closed during operation.

Conforme à la norme ASTM E1509-12 (R2017) Std. Certifié à la norme ULC S627-00 Std. Room Heating Pellet Burning Type, (UM) 84-HUD POUR USAGE AVEC LES BOULETTES DE BOIS. N'utiliser aucun autre genre de combustible.

Puissance de Rendement: 49,207 Btu's/hr. Puissance Électrique: 120 VAC, 60 Hz, Début 2.6 Amps, Courir 2,3 Amps, Éloignez le fil électrique de l'appareil. Ne pas faire passer le fil électrique au dessus ou en dessous de l'appareil. Ne pas bloquer l'espace au dessous de l'appareil.

DANGER: Il y a risque de décharge électrique. Déconnectez le fil électrique de la prise de contact avant le service. Remplacez la vitre seulement avec une vitre céramique de 5 mm disponible chez votre fournisseur. Pour commencer, tourner le cadran de commande au réglage désiré, le poêle s'allume automatiquement. Pour l'arrêt, tourner le cadran de commande en position OFF. Pour des instructions supplémentaires, référez vous au manuel du propriétaire. Gardez la porte d'ouverture et la porte des cendres fermées hermétiquement durant l'opération.

Cumple con la norma ASTM Std E1509-12 (R2017). Certificado de ULC S627-00 Std, cuarto de la calefacción de pellets BurningType, (UM), de 84 de HUD PARA USO EXCLUSIVO CON COMBUSTIBLE DE MADERA granulado. No utilice ningún otro tipo de combustible.

Clasificación de entrada: 49,207 BTU / hr. Clasificación eléctrica: 120 VAC, 60 Hz, 2,6 amperios Inicio, Ejecutar 2,3 amperios. Pase el cable de alimentación alejado de la unidad. No encamine el cordón por debajo o por delante del aparato. No obstruya el espacio debajo de la estufa.

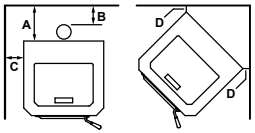

MINIMUM CLEARANCES TO COMBUSTIBLE MATERIALS / ESPACES LIBRES MINIMUM DES MATÉRIAUX
DISTANCIAS MÍNIMAS a los materiales combustibles

A	Back Wall / Mur Arrière / Muro Posterior	(horizontal installation)	3 in [76 mm]
B	Flue Pipe / Conduit de fumée / Cañón de Humos		3 in [76 mm]
C	Side Wall / Mur De Côté / Muro Lateral		9 in [229 mm]

CORNER INSTALLATION / INSTALLATION DU COIN / RINCÓN DE LA INSTALACIÓN

D	Side Wall / Mur De Côté / Muro Lateral	3 in [76 mm]

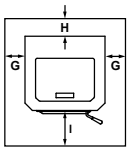

USA
G = 2 in
H* = 2 in
I = 6 in

CANADA
G = 203 mm
H* = 51 mm
I = 152 mm

FLOOR PROTECTION / PROTECTION DU SOL / PISO DE PROTECCION

Floor protector must be non-combustible material, extending beneath heater and to the front/sides/rear as indicated. Measure front distance (I) from the surface of the glass door.

Le poêle doit être placé sur une assise non combustible s'étendant tout autour de lui, comme les schémas l'indiquent. Mesurez la distance du devant (I) de la surface de la porte vitrée.

Protector de piso debe ser de material incombustible, se extiende por debajo del calentador y al frente / lado / trasero, como se indica. Medir la distancia frontal (I) de la superficie de la puerta de vidrio.

*Non-combustible floor protection must extend 2 inches (51mm) beneath the flue pipe when installed with horizontal venting or under the Top Vent Adapter with vertical installation. RECOMMENDED IN USA; REQUIRED IN CANADA.

*Un protecteur incombustible de plancher doit s'étendre 2 inches (51mm) sous le conduit de cheminée pour une installation de ventilation horizontale ou sous un adapteur de ventilation de dessus pour une installation verticale. RECOMMANDÉ AUX ÉTATS-UNIS; NÉCESSAIRE AU CANADA.

*No es combustible mínimo de protección debe extenderse 2 pulgadas (51mm) por debajo del conducto de humos cuando se instalan con la ventilación horizontal o en el adaptador de ventilación superior con instalación vertical. RECOMENDADO EN EE.UU.; REQUERIDA EN CANADÁ.

EPA
0135PS041E

HEARTH & HOME technologies
Hearth & Home Technologies®
352 Mountain House Road
Halifax, PA 17032
1.877.427.3316
www.pelprostoves.com

U.S. ENVIRONMENTAL PROTECTION AGENCY

Certified to comply with 2020 particulate emission standards at 0.53 g/hr EPA method 28 and 5G. This wood heater needs periodic inspection and repair for proper operation. Consult the owner's manual for further information. It is against federal regulations to operate this wood heater in a manner inconsistent with the operating instructions in the owner's manual.

2021	2022	2023	JAN	FEB	MAR	APR	MAY	JUN	JUL	AUG	SEP	OCT	NOV	DEC
☐	☐	☐	☐	☐	☐	☐	☐	☐	☐	☐	☐	☐	☐	☐

DO NOT REMOVE THIS LABEL / NE PAS ENLEVER L'ÉTIQUETTE

Made in Vietnam / Fabriqué en Vietnam

8105-208B

CAUTION: HOT WHILE IN OPERATION DO NOT TOUCH. KEEP CHILDREN, CLOTHING AND FURNITURE AWAY. CONTACT MAY CAUSE SKIN BURNS. SEE NAMEPLATE AND INSTRUCTIONS.

ATTENTION: CHAUD LORS DE L'OPÉRATION. NE PAS TOUCHER. GARDEZ LES ENFANTS ET LES VÊTEMENTS LOIN DE L'ESPACE DÉSIGNÉ DE L'INSTALLATION. LE CONTACT PEUT CAUSER DES BRÛLURES À LA PEAU. VOIR L'ÉTIQUETTE ET LES INSTRUCTIONS.

c UL us LISTED
Solid Fuel Type Room Heater
Issue No. MH60687

PP150 Pellet Stove

Serial No. / Nº de série: VN

BARCODE LABEL

Listed Solid Fuel Room Heater/Pellet Type. Also suitable for Mobile Home Installation. This appliance has been tested and listed for use in Manufactured Homes in accordance with OAR 814-23-9000 through 814-23-909.

Appareil de chauffage de combustible solide/de type de boulettes. Accepté dans l'installation dans les maisons mobiles. Cet appareil a été testé et enregistré pour l'usage dans les Maisons Mobiles en accord avec OAR 814-23-9000 jusqu'à 814-23-909.

Listado de habitaciones de combustible sólido del calentador / Pellet Tipo. También es adecuado para la instalación de casas móviles. Este aparato ha sido probado y certificado para su uso en casas prefabricadas, de conformidad con OAR 814-23-9000 través de 814-23-909.

PREVENT HOUSE FIRES / PRÉVENTION DES FEUX DE MAISON

Install and use only in accordance with manufacturer's installation and operating instructions. Contact local building or fire officials about restrictions and installations inspection in your area.

WARNING - FOR MOBILE HOMES: Do not install appliance in a sleeping room. An outside combustion air inlet must be provided. The structural integrity of the mobile home floor, ceiling and walls must be maintained. Refer to manufacturer's instructions and local codes for precautions required for passing chimney through a combustible wall or ceiling. Inspect and clean vent system frequently in accordance with manufacturer's instructions. DO NOT CONNECT THIS UNIT TO A CHIMNEY SERVING ANOTHER APPLIANCE. Use a 3" or 4" diameter type "L" or "PL" venting system.

Installez et utilisez en accord avec les instructions d'installation et d'opération du fabricant. Contactez le bureau de la construction ou le bureau des incendies au sujet des restrictions et des inspections d'installation dans votre voisinage. Ne pas obstruez l'espace en dessous de l'appareil.

AVIS - Pour Les Maisons Mobiles: Ne pas installer dans une chambre à coucher. Un tuyau extérieur de combustion d'air doit être installé et ne doit pas être obstrué lorsque l'appareil est en usage. La structure intégrale du plancher, du plafond et des murs de la maison mobile doit être maintenue intacte. Référez vous aux instructions du fabricant et des codes locaux pour les précautions requises pour passer une cheminée à travers un mur ou un plafond combustibles, et les compensations maximums. Inspectez et nettoyez la cheminée fréquemment. Ne pas connecter cet appareil à une cheminée servant un autre appareil. Utilisez systèm de ventilation "L" ou "P" diamètre 76mm ou 102mm

Instale y use únicamente de acuerdo con la instalación del fabricante y las instrucciones de funcionamiento. Póngase en contacto con la construcción o de los bomberos sobre las restricciones y la inspección en nuestra área.

Conforms to ASTM Std E1509-12 (R2017). Certified to ULC S627-00. Room Heating Pellet BurningType, (UM) 84-HUD FOR USE ONLY WITH PELLETIZED WOOD FUEL. Do not use any other type of fuel.

Input Rating: 49,207 Btu's/hr. Electrical Rating:120 VAC, 60 Hz, Start 2.6 Amps, Run 2.3 AMPS. Route power cord away from unit. Do not route cord under or in front of appliance. Do not obstruct the space beneath the heater.

DANGER: Risk of electrical shock. Disconnect power supply before servicing. Replace glass only with 5mm ceramic. To start, turn dial control to desired setting, the stove will light automatically. To shutdown, turn dial control to off position. For further instruction refer to owner's manual. Keep viewing doors tightly closed during operation.

Conforme à la norme ASTM E1509-12 (R2017) Std. Certifié à la norme ULC S627-00 Std. Room Heating Pellet Burning Type, (UM) 84-HUD POUR USAGE AVEC LES BOULETTES DE BOIS. N'utiliser aucun autre genre de combustible.

Puissance de Rendement: 49,207 Btu's/hr. Puissance Électrique: 120 VAC, 60 Hz, Début 2.6 Amps, Courir 2,3 Amps, Éloignez le fil électrique de l'appareil. Ne pas faire passer le fil électrique au dessus ou en dessous de l'appareil. Ne pas bloquer l'espace au dessous de l'appareil.

DANGER: Il y a risque de décharge électrique. Déconnectez le fil électrique de la prise de contact avant le service. Remplacez la vitre seulement avec une vitre céramique de 5 mm disponible chez votre fournisseur. Pour commencer, tourner le cadran de commande au réglage désiré, le poêle s'allume automatiquement. Pour l'arrêt, tourner le cadran de commande en position OFF. Pour des instructions supplémentaires, référez vous au manuel du propriétaire. Gardez la porte d'ouverture et la porte des cendres fermées hermétiquement durant l'opération.

Cumple con la norma ASTM Std E1509-12 (R2017). Certificado de ULC S627-00 Std, cuarto de la calefacción de pellets BurningType, (UM), de 84 de HUD PARA USO EXCLUSIVO CON COMBUSTIBLE DE MADERA granulado. No utilice ningún otro tipo de combustible.

Clasificación de entrada: 49,207 BTU / hr. Clasificación eléctrica: 120 VAC, 60 Hz, 2,6 amperios Inicio, Ejecutar 2,3 amperios. Pase el cable de alimentación alejado de la unidad. No encamine el cordón por debajo o por delante del aparato. No obstruya el espacio debajo de la estufa.

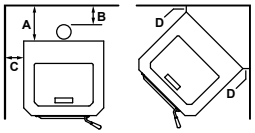

MINIMUM CLEARANCES TO COMBUSTIBLE MATERIALS / ESPACES LIBRES MINIMUM DES MATÉRIAUX
DISTANCIAS MÍNIMAS a los materiales combustibles

A	Back Wall / Mur Arrière / Muro Posterior	(horizontal installation)	3 in [76 mm]
B	Flue Pipe / Conduit de fumée / Cañón de Humos		3 in [76 mm]
C	Side Wall / Mur De Côté / Muro Lateral		9 in [229 mm]

CORNER INSTALLATION / INSTALLATION DU COIN / RINCÓN DE LA INSTALACIÓN

D	Side Wall / Mur De Côté / Muro Lateral	3 in [76 mm]

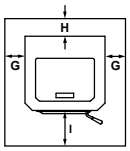

USA
G = 2 in
H* = 2 in
I = 6 in

CANADA
G = 203 mm
H* = 51 mm
I = 152 mm

FLOOR PROTECTION / PROTECTION DU SOL / PISO DE PROTECCION

Floor protector must be non-combustible material, extending beneath heater and to the front/sides/rear as indicated. Measure front distance (I) from the surface of the glass door.

Le poêle doit être placé sur une assise non combustible s'étendant tout autour de lui, comme les schémas l'indiquent. Mesurez la distance du devant (I) de la surface de la porte vitrée.

Protector de piso debe ser de material incombustible, se extiende por debajo del calentador y al frente / lado / trasero, como se indica. Medir la distancia frontal (I) de la superficie de la puerta de vidrio.

*Non-combustible floor protection must extend 2 inches (51mm) beneath the flue pipe when installed with horizontal venting or under the Top Vent Adapter with vertical installation. RECOMMENDED IN USA; REQUIRED IN CANADA.

*Un protecteur incombustible de plancher doit s'étendre 2 inches (51mm) sous le conduit de cheminée pour une installation de ventilation horizontale ou sous un adapteur de ventilation de dessus pour une installation verticale. RECOMMANDÉ AUX ÉTATS-UNIS; NÉCESSAIRE AU CANADA.

*No es combustible mínimo de protección debe extenderse 2 pulgadas (51mm) por debajo del conducto de humos cuando se instalan con la ventilación horizontal o en el adaptador de ventilación superior con instalación vertical. RECOMENDADO EN EE.UU.; REQUERIDA EN CANADÁ.

EPA
0135PS041E

HEARTH & HOME technologies
Hearth & Home Technologies®
352 Mountain House Road
Halifax, PA 17032
1.877.427.3316
www.pelprostoves.com

U.S. ENVIRONMENTAL PROTECTION AGENCY

Certified to comply with 2020 particulate emission standards at 0.53 g/hr EPA method 28 and 5G. This wood heater needs periodic inspection and repair for proper operation. Consult the owner's manual for further information. It is against federal regulations to operate this wood heater in a manner inconsistent with the operating instructions in the owner's manual.

2021	2022	2023	JAN	FEB	MAR	APR	MAY	JUN	JUL	AUG	SEP	OCT	NOV	DEC
☐	☐	☐	☐	☐	☐	☐	☐	☐	☐	☐	☐	☐	☐	☐

DO NOT REMOVE THIS LABEL / NE PAS ENLEVER L'ÉTIQUETTE

Made in Vietnam / Fabriqué en Vietnam

8104-208B





PP130 Pellet Stove

Owner's Manual

⚠WARNING!

Please read this entire manual before installation and use of this pellet fuel-burning room Stove, and save for future reference. Failure to follow these instructions could result in property damage, bodily injury or even death. Contact local building or fire officials about restrictions and installation inspection requirements in your area.

Note: To obtain a French translation of this manual, please contact your dealer or visit www.pelprostoves.com. Pour obtenir une traduction francaise de ce manuel, s'il vous plait contracter votre revendeur ou visitez www.pelprostoves.com

Get to Know Your PelPro® Stove

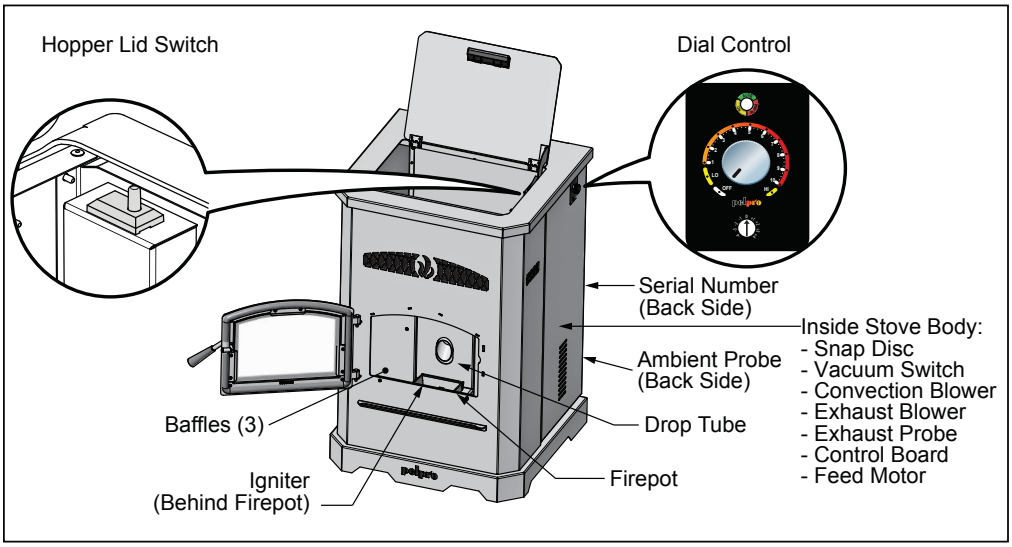

Safety First!

Safety Alert Key: It is important to pay attention to alerts you will see throughout this manual to ensure your safety.

- **DANGER!** Indicates a hazardous situation which, if not avoided will result in death or serious injury.
- **WARNING!** Indicates a hazardous situation which, if not avoided could result in death or serious injury.
- **CAUTION!** Indicates a hazardous situation which, if not avoided, could result in minor or moderate injury.
- **NOTICE:** Indicates practices which may cause damage to the Stove or to property.
- **Pro Tip:** Indicates additional information to help you better understand your Stove and optimize its performance.

NOTICE:
Fire Risk
PelPro disclaims any responsibility, and the warranty and agency listing will be voided, by the below actions.
DO NOT:



- Install or operate damaged Stove
- Modify Stove
- Install other than as instructed by the manufacturer
- Operate the Stove without fully assembling all components
- Over fire (burning at higher temperatures than recommended causing permanent damage to the Stove)
- Install any component not approved by the manufacturer
- Install parts or components not listed or approved
- Disable safety switches

Improper installation, adjustment, alteration, service or maintenance can cause injury or property damage. For assistance or additional information, consult a qualified installer, service agency or your dealer.

DANGER!
HOT SURFACES!
Glass and other surfaces are hot during operation AND cool down.
Hot glass will cause burns.



- Do not touch glass until it is cooled
- NEVER allow children to touch glass
- Keep children away; if you expect that children may come into contact with this Stove, we recommend a barrier such as a decorative screen (see your retailer for suggestions)
- CAREFULLY SUPERVISE children in same room as Stove
- Alert children and adults to hazards of high temperatures

High temperatures may ignite clothing or other flammable materials.

- Keep clothing, furniture, draperies and other flammable materials away

Table of Contents

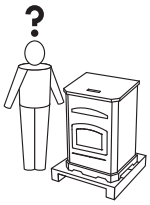

Getting Started 4
- Pallet removal
- What's included
- What you'll need

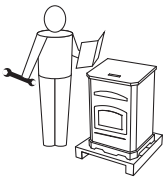

Installing Your Stove 6
- Getting ready
- Placing your Stove
- Venting your Stove



Using Your Stove 13
- Starting your Stove
- What to expect
- Comfort settings
- Turning your Stove off

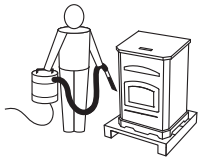

Maintaining Your Stove 20
- What you may need
- Where, when and how



Troubleshooting 24
- Power related
- Blockage related



Support 30
- Contact information
- Ordering Parts



Listings and Certifications 31
- Mobile home approval
- Glass specification
- Efficiencies
- Stove dimensions
- Warranty



Reference Materials 34
- Service Part List
- Maintenance Log

Getting Started

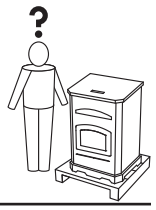

Pallet Removal

There are bolts holding your PelPro Stove in place on the pallet. To remove your Stove from the pallet:

Pallet Removal
Visit pelprostoves.com or scan the code:

1

Loosen the three retaining bolts on the back of the Stove and remove the right and left side panels.

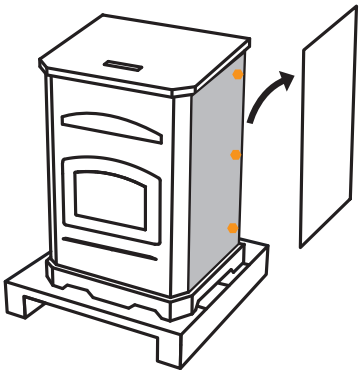

2

Using a 5/16 inch wrench, on each side of the Stove remove the two bolts.

Remove shipping brackets by reaching into Stove in the same area as the just removed bolts.

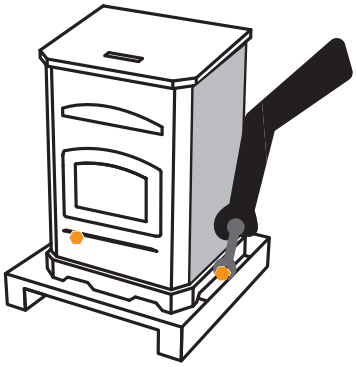

⚠ WARNING!
Inspect Stove and components for damage. Damaged parts may impair safe operation.
- Do NOT install damaged components.
- Do NOT install incomplete components.
- Do NOT install substitute components.

Report damaged parts to dealer.

⚠ CAUTION!
Risk of cuts, abrasions or flying debris. Wear protective gloves & safety glasses during install. Metal edges are sharp.

What's Included



Owner's manual



Cleaning tool



Power cord



Door handle



Online Installation & Trouble Shooting Videos

Outside air kit components:



4" Flex hose

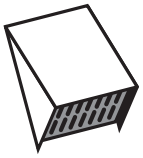

Termination Cap

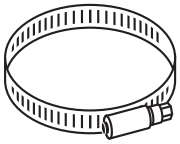

Hose clamp



Screws (4)

Getting Started



What You'll Need

Tools & Supplies

- High temperature silicone (500°F+)
- Level
- Phillips screwdriver
- Plumb line
- Tape measure
- Framing square
- Reciprocating saw
- Electric drill & bits
- Caulking gun
- Stud finder
- Utility knife
- Pliers
- Flashlight
- Hammer

Safety Equipment

Recommended for all installation and maintenance steps.



Gloves



Safety glasses



Close-toed shoes

Pellet Vent Pipe

Must be an approved 3" or 4" diameter Type "L" or "PL" vent. Use 4" diameter vent if flue height is over 15' or if installation is over 3,000ft. above sea level.



⚠ WARNING!

Fire Risk. NO OTHER vent components may be used. Substitute or damaged vent components may impair safe operation.

Floor Protection

Non-combustible material (such as a hearth pad) is required underneath your Stove.

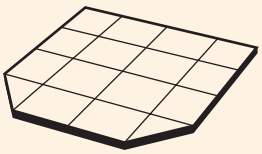

Surge Protector

Protect the electrical components of your Stove by using a surge protector.

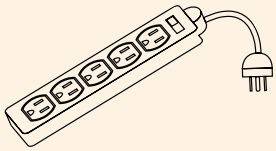

Pellet Fuel

Use only wood pellets in your Stove. For best performance, use premium, low-ash pellets (<1%) less than 1.5" in length and avoid the dusty bits and pieces of pellets in the bottom of the bag.

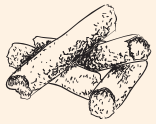

Installing Your Stove

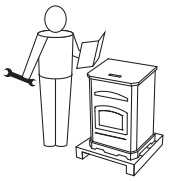

Getting Ready

Pro Tip
We highly recommend your Stove and pellet vent pipe be installed by a professional installer. Your retailer can make recommendations for you.
Installation MUST comply with local, regional, state and national codes and regulations.
Consult insurance carrier, local building inspector, fire officials or authorities having jurisdiction over restrictions, installation inspection and permits.

Placement

Where you place your Stove can significantly affect its performance and safety.

A **Your Home Acts Like a Chimney**
We recommend that you help your home by:
1. Using a minimum of 5 feet of vertical venting
2. Use the supplied outside air kit
3. Install your Stove on a main floor location

This will:
- Help your Stove breathe
- Minimize smoke leakage in the house
- Enhance performance

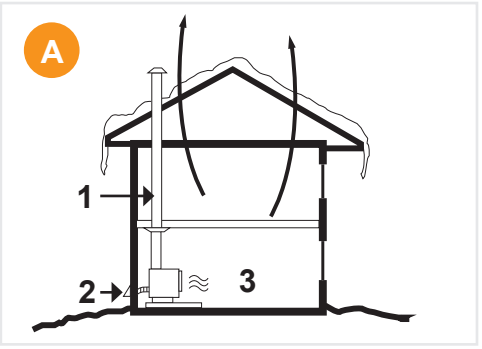

B **Clearance to Combustibles**
The space between your Stove and the items in your home that could burn. Materials such as:
- Wood
- Sheet rock (drywall)
- Carpet

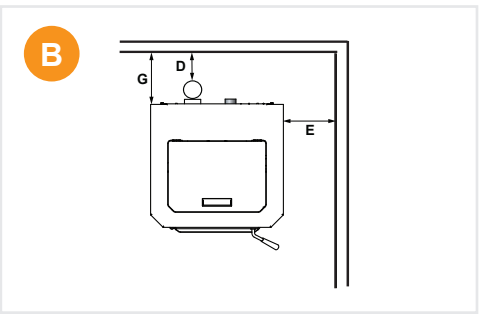



⚠ WARNING!
Asphyxiation Risk.
DO NOT INSTALL IN A SLEEPING ROOM. Consumes oxygen in the room.

For Canada, the installation must conform to CAN/CSA-B365

Installing Your Stove

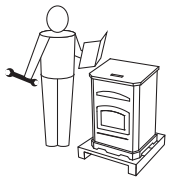

Getting Ready (Continued)

C Pellet Venting

Adding bends in the exhaust path restricts air flow, reduces performance and provides a collection point for ash deposits requiring more frequent cleaning.

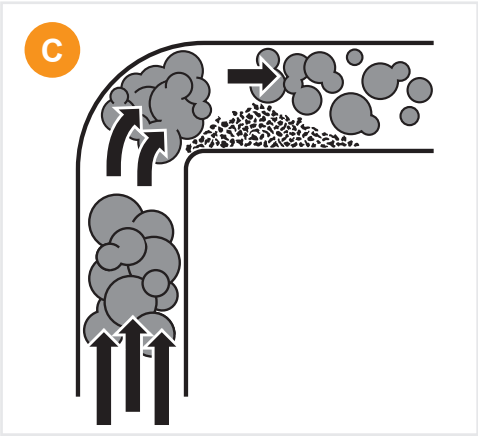

⚠ CAUTION

- Do not connect to any air distribution duct or system
- Do not install a flue damper in the exhaust venting system of this Stove
- Do not connect this Stove to a chimney flue serving another Stove
- The structural integrity of the manufactured home floor, wall and ceiling/roof must be maintained

REQUIRED:

Use only 3” or 4” type “L” or “PL” pellet pipe.

Pro Tip

This Stove can be installed with a 3 to 6 inch (76-152mm) Top Vent Offset Adapter Kit. The 3 to 6 inch (76-152mm) Top Vent Offset Adapter are tested to use 24 gauge single wall flue connector or Listed double wall flue connector to Class A Listed metal chimneys, or masonry chimneys meeting International Conference of Building Officials (ICBO) standards for solid fuel Stoves.

Installation Video

Visit pelprostoves.com or scan this code:

Installing Your Stove

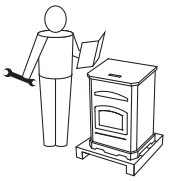

Vent Termination Clearances

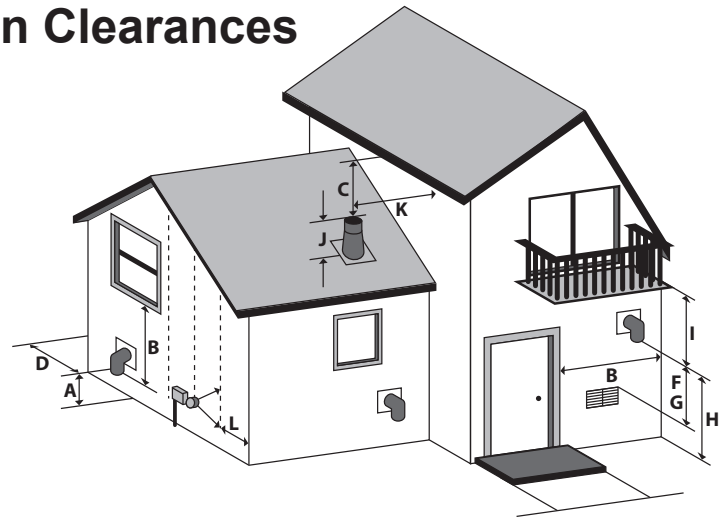

	Clearances	
A	12”	Clearance above grade, veranda porch, deck or balcony (Including vegetation and mulch)
B	12”	Clearance beside or below any windows or doors that open
	12”*	Clearance above any window or door that opens
C	18”	Vertical clearance to ventilated soffit located above the terminal within a horizontal distance of 2 feet from the center line of the terminal
D	12”	Clearance to an outside corner wall
F	12”, 48” no outside air kit	Clearance to a non-mechanical air supply inlet to the building or a combustion air inlet to any other Stove
G	36”	Clearance to a mechanical air supply inlet
H	84”**	Clearance above a paved sidewalk or paved driveway located on public property
I	12”**	Clearance under a veranda, porch, deck or balcony
J	12”	Clearance above the roof
K	24”	Clearance from an adjacent wall including neighboring buildings
L	36” within a height of 15 feet above the meter / regulator assembly	Clearance to each side of center line extended above natural gas or propane meter / regulator assembly or mechanical vent

*Recommended to prevent condensation on windows and thermal breakage. **This is a recommended distance. For additional requirements check local codes.

NOTICE:
Do NOT terminate vent:

- In any location that will allow flue gases or soot from entering or staining the building
- In any location which could create a nuisance or hazard
- In any enclosed or semi-enclosed area such as a carport, garage, attic, crawl space, under a sun deck or porch or narrow walkway
- Closely fenced area, or any location that can build up a concentration of fumes such as a stairwell, covered breezeway, etc.

NOTICE:
Do NOT terminate below an air inlet.

- It is recommended that at least 60” (1.52m) of vertical pipe be installed when Stove is vented directly through a wall—this will create a natural draft, which will help prevent the possibility of smoke or odor venting into the home during a power outage
- It will also keep exhaust from causing a nuisance or hazard by exposing people or shrubs to high temperatures
- The safest and preferred venting method is to extend the vent vertically through the roof or above the roof

Installing Your Stove

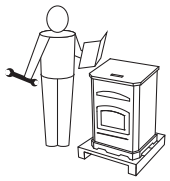

Placing Your Stove

1 It is necessary to install **EMBER PROTECTION**; a Type I floor protector for this Stove.

The Floor protector must be non-combustible material, extending beneath Stove with a minimum of 6 inches (152mm) in front of glass and 6 inches (152mm) to both sides of the fuel loading door. Open the door and measure 6 inches (152mm) from the side edge of the opening in the face of the Stove.

Notice: Be careful to protect the bottom of the Stove and floor surfaces when moving the Stove. Bottom edges of Stove are sharp and can scratch surfaces.

Notice: Clearances may only be reduced by means approved by the regulatory authority having jurisdiction.

2 Hearth pad minimum requirements:

USA Hearth Pad Requirements		Inches	mm
A	Sides	2	51
B	Back	2	51
C	Front	6	152

Canada Hearth Pad Requirements		Inches	mm
A	Sides	8	203
B	Back	2	51
C	Front	6	152

Non-combustible floor protection extending beneath the flue pipe is required with horizontal venting or under the top vent adapter with vertical installation.

*Non-combustible floor protection must extend 2 inches (51mm) beneath the flue pipe when installed horizontal venting or under the top vent adapter with vertical installation. CANADA REQUIRED, USA RECOMMENDED.

3 Confirm required clearances to combustibles:

Vertical Installations (Interior Flue)			
Straight back against wall		Inches	mm
D	Back wall to pellet pipe	3	254
E	Side wall to Stove	13	330

Corner Installation			
Straight back against wall		Inches	mm
F	Walls to Stove	3	76

Horizontal Installations			
Straight back against wall		Inches	mm
G	Back wall to Stove	2	51
E	Side wall to Stove	13	330

1

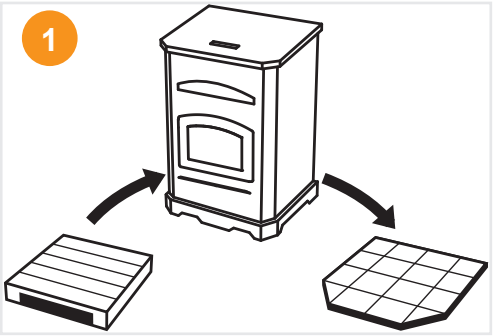

2

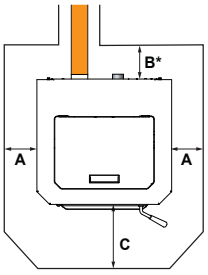

3

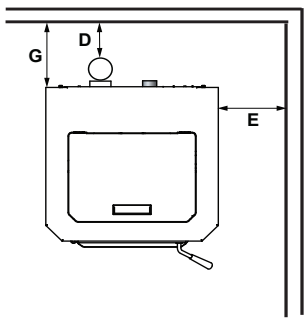

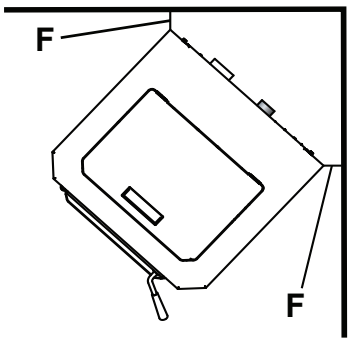

Installing Your Stove

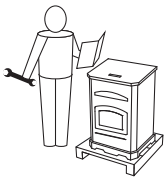

Venting Your Stove

⚠ CAUTION!
Take appropriate precautions to locate utilities within the wall and avoid contact.

1. **Mark and cut wall for venting penetration on exterior wall (if needed).**
2. **Install wall thimble (sold separately) per manufacturer requirements.**
3. **Install venting. (For additional installation options visit pelprostoves.com)**
4. **Use silicone to create an effective vapor barrier at the location where the chimney or other component penetrates to the exterior of the structure.**

Vertical - Interior, Preferred Installation

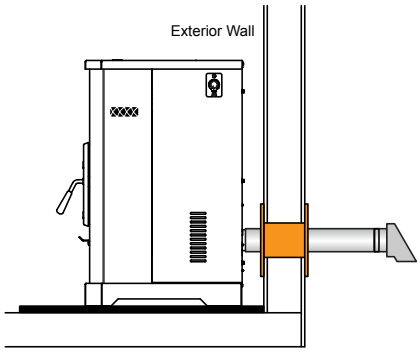

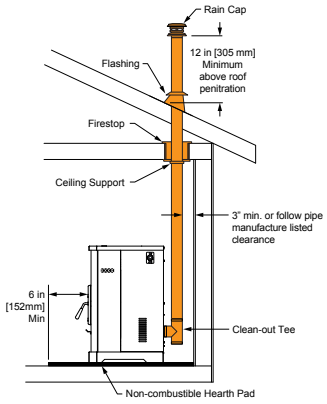

Exterior - Optional Installations

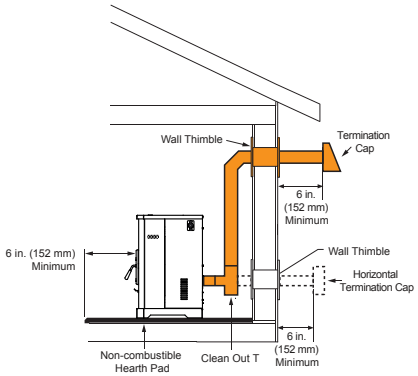

NOTE: In Canada when using a factory-built chimney it must be safety listed, Type UL103 HT (2100°F) CLASS “A” or conforming to CAN/ULC-S629M, STANDARD FOR 650°C FACTORY-BUILT CHIMNEYS.

Pro Tips

- See venting manufacturer’s required clearances to combustibles
- For horizontal installations, the minimum clearance from exterior to termination cap is 6”—you may want to increase to 18” clearance to minimize soot blow back on home exterior.

Install vent at clearances specified by the manufacturer

⚠ WARNING!
Do not terminate venting in any enclosed or semi-enclosed area such as: a carport, garage, attic, crawl space, under a sun deck or porch, narrow walkway or closely fenced area, or any location that can build up a concentration of fumes such as a stairwell, covered breezeway, etc.

⚠ CAUTION!
Ensure that your Stove venting terminates above your Stove. The following may occur:
- Your Stove will not draft properly
- Smoke may seep in your house
- Excessive sooting

Installing Your Stove

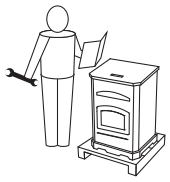

Venting Your Stove

The maximum horizontal venting allowed with no vertical venting attached is 48 inches including one 90° elbow or two 45° elbows. Addition of any horizontal venting beyond 48 inches requires a minimum 60 inches of additional vertical vent. Horizontal sections of vent pipe should have a 1/4 inch rise per foot. We recommend using the shortest venting and fewest elbows possible when venting horizontal.

We recommend the use of 4 inch vent with any installation requiring more than two 90° elbows, or more than 15 feet of venting.

- **45° elbow is equivalent to 1 foot of straight pipe**
- **90° elbow is equivalent to 3 feet of straight pipe**

⚠ WARNING!
Fire Risk.



- Only LISTED venting components may be used
- NO OTHER vent components may be used. Substitute or damaged vent components may impair safe operation.

Notice:
These are guidelines for successful venting of your pellet Stove. The more vertical rise you can obtain in your system, the better it will perform. Horizontal vent runs can accumulate ash and will need to be cleaned more often. Try to keep them as short as possible.

One 90° Elbow

Total Horizontal	Minimum Vertical	Vent Diameter
4	0	3
5	5	3
6	6	3
7	7	3
8	8	4
9	9	4
10	10	4
11	11	4
12	12	4
13	13	4
14	14	4
15	15	4
16	16	4
17	17	4
18	18	4
19	19	4

Minimum Vertical Vent for One Elbow

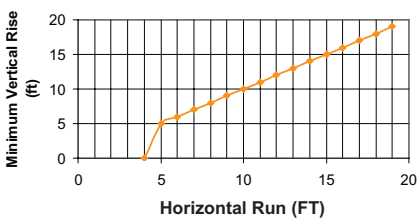

Two 90° Elbows

Total Horizontal	Minimum Vertical	Vent Diameter
2	5	3
3	6	3
4	7	3
5	8	3
6	9	3
7	10	4
8	11	4
9	12	4
10	13	4
11	14	4
12	15	4
13	16	4
14	17	4
15	18	4

Minimum Vertical Vent for Two Elbows

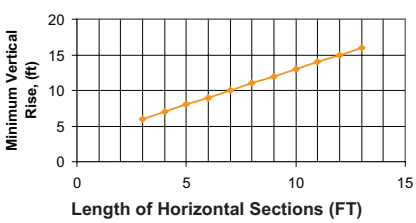

Three 90° Elbows

Total Horizontal	Minimum Vertical	Vent Diameter
2	11	4
3	12	4
4	13	4
5	14	4
6	15	4
7	16	4
8	17	4
9	18	4
10	19	4
11	20	4

Minimum Vertical Vent for Three Elbows

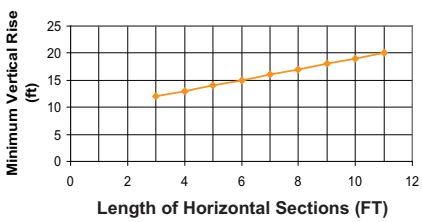

Installing Your Stove

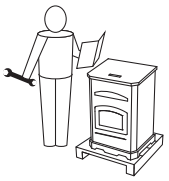

5 Install pellet venting through wall and connect vent/pipe to Stove **A**

- Some venting manufacturers offer pellet Stove adapters for their venting for easier installation
- Seal all pipe joints using high-temp silicone (500°+)
- Secure exhaust venting system to the Stove with at least 3 screws or rivets per the pipe manufacturer's instructions. Also secure all connector pipe joints with at least 3 screws through each joint.
- Install termination cap
- Confirm all required Stove clearances to combustibles

A

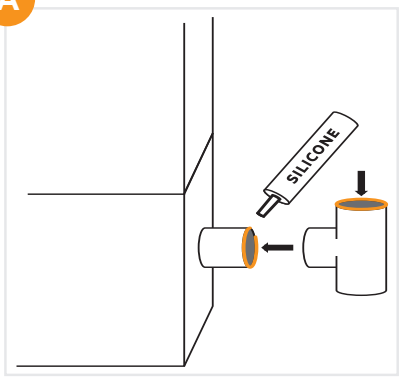

Pro Tip
Installing a clean-out "T" (sold separately) to the rear of your Stove, when venting vertically can save time during cleaning.

6 **Install outside air kit (included)**
For optimal performance, PelPro recommends the outside air kit for all installations. Outside air kit is required for all mobile/manufactured home installations.

Install through wall **B**

- Maintain clearances from exhaust
- Remove knock out in the rear of Stove
  - Attach flex pipe to outside air connection on Stove
  - Use hose clamp
  - Route tube outside the structure
  - Attach cap
  - Secure to outside wall with appropriate fasteners

B

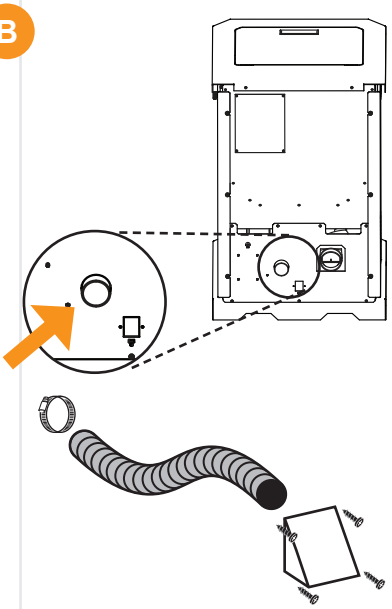

Take a Break
Inspect your work:

_____ Confirm clearances to combustibles are maintained

_____ Pipe joints are secure and properly sealed

_____ Outside air kit installed properly

_____ Confirm termination clearances

⚠ CAUTION!
Never draw outside combustion air from:

- Wall, floor or ceiling cavity
- Enclosed space such as an attic, garage or crawl space.

Using Your Stove



Fuel Tips

Fuel Material and Fuel Storage
Pellet fuel quality can greatly fluctuate. We recommend that you buy fuel in multi-ton lots whenever possible. However, we do recommend trying various brands before purchasing multi-ton lots to ensure your satisfaction. Store fuel in dry location not within clearances to combustibles of your Stove.

Fuel Material

- Made from sawdust or wood by-products
- Depending on the source material it may have a high or low ash content.

Higher Ash Content Material

- Hardwoods with a high mineral content
- Fuel that contains bark
- Standard grade pellets or high ash pellets

Lower Ash Content Material

- Most softwoods
- Fuels with low mineral content
- Most premium grade pellets

Pro Tip
We recommend the use of Pellet Fuels Institute certified pellet fuel with this product.

Your Stove has a manufacture-set minimum low burn rate that must not be altered. It is against federal regulations to alter this setting or otherwise operate your Stove in a manner inconsistent with operation instructions in this manual.

Using Your Stove



Starting your Stove the first time

What to Expect

1. Combustion blower will turn on
2. Igniter will turn on
3. Pellets will drop, smoke may occur in firebox but will evacuate, and flame will appear in fire pot.
4. Convection blower will automatically turn on after the Stove heats up. Convection blower will continue to run even after your Stove has been shut down.

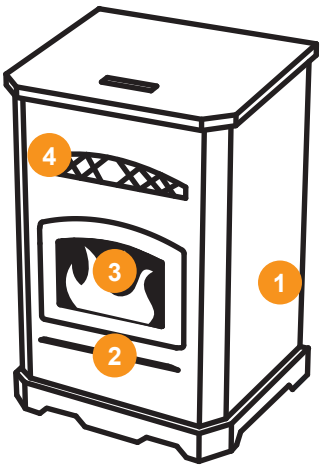

Pro Tips

- Odors and vapors are released during initial startup after purchase; burning your Stove on HI for 30 minutes will allow the paint to cure. Open windows or doors for air circulation until burn off is complete.
- During start up and normal operation your Stove's front door must be closed
- Priming is only required the first time your Stove is lit, or after a FUEL FEED ALARM.



⚠ WARNING!

Fire Risk

Keep combustible materials, gasoline and other flammable vapors and liquids clear of Stove.

- Do NOT operate Stove with door open
- Do NOT operate Stove with fire pot floor open
- Do NOT store flammable materials in the Stove's vicinity
- Do NOT use gasoline, lantern fuel, kerosene, charcoal lighter fluid or similar liquids or gels to start or "freshen up" a fire in this Stove

Keep all such liquids well away from the Stove while it is in use as combustible materials may ignite.



⚠ WARNING!

HOT SURFACES! Glass and other surfaces are hot during operation AND cool down.
Hot glass will cause burns.

- Do not touch glass until it is cooled
- NEVER allow children to touch glass
- Keep children away
- CAREFULLY SUPERVISE children in same room as fireplace
- Alert children and adults to hazards of high temperatures
- High temperatures may ignite clothing or other flammable materials
- Keep clothing, furniture, draperies and other flammable materials away

Using Your Stove



Use and Care
Visit pelprostoves.com or scan this code:

Important:
Allow up to 20 minutes for your Stove to start.

1 Confirm fire pot is properly positioned

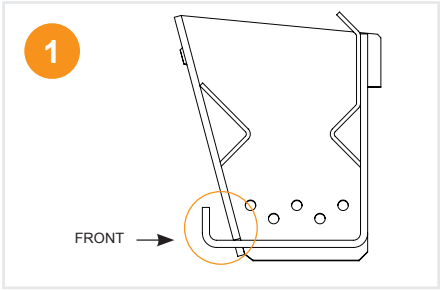

2 Confirm three baffles inside firebox are secure, placing the side baffles before the center

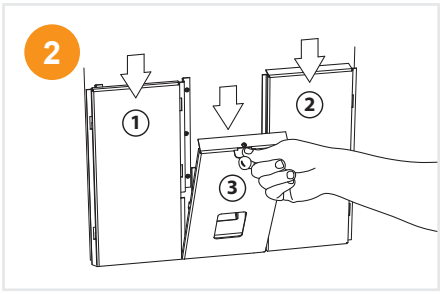

3 Add some pellets to hopper and fully close lid

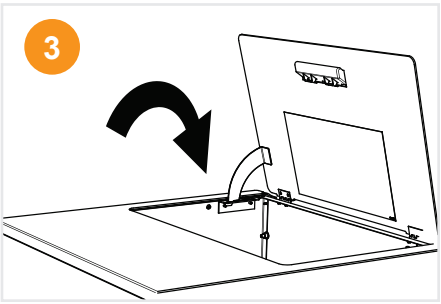

4 Ensure dial control is set in off position.

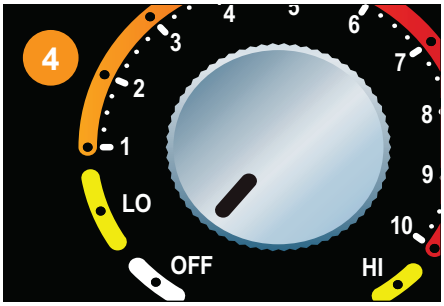

WARNING! Shock hazard.
- Plug directly into properly grounded 3 prong receptacle
- Do NOT route cord under or in front of Stove
- Recommend the use of a surge protector

Using Your Stove



Starting your Stove from an empty hopper

5 Plug in your Stove

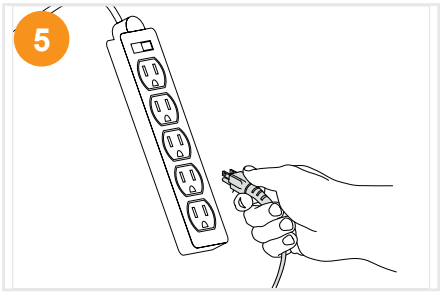

6 Wait 1 minute - LED light will start flashing green once per second.

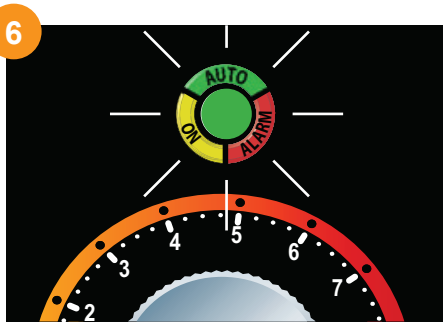

7 **Prime your Stove:**

1) Quickly turn the dial control from OFF to HI
2) Back to OFF
3) Then back to HI

The feed motor will run continuously for two minutes and the LED light will be solid green. Once primed, pellets will drop into the fire pot and the LED light will blink green as ignition starts. This process can take up to 20 minutes.



⚠ CAUTION:
During this process DO NOT:
- Try to restart, manually add pellets or use any type of accelerant

Using Your Stove



What Do the Blinking Lights Mean?

Green & Amber - Normal Operation

- Green, Steady On - Feed system is priming
- Green, 1 Blink - Stove is off and ready
- Green, Continuous Blinking - Stove is in the start up/ignition sequence
- Green, Varies Blinks - Varies depending on burn rate
- Amber, Steady On - Stove is set and running at either the minimum or maximum power levels
- Amber, Continuous Blinking - Stove is in the shutdown sequence. *Early models may have a green continuous blinking light during shutdown sequence.

Red - Operational Issue - Refer to troubleshooting

- Red, 1 Blink - Empty hopper, refer to troubleshooting
- Red, 2 Blinks - Exhaust probe alarm, check connections or refer to troubleshooting
- Red, 3 Blinks - Ambient probe alarm, check connections or refer to troubleshooting
- Red, 4 Blinks - Missed ignition, refer to troubleshooting
- Red, 8 Blinks - Exhaust gas over temperature, refer to troubleshooting

If your Stove does not ignite on the initial burn, the LED light will blink red 4 times indicating a missed ignition.

1. Turn your Stove to off, remove and clean the fire pot
2. Confirm fire pot is properly positioned
3. Prime your Stove per previous instructions

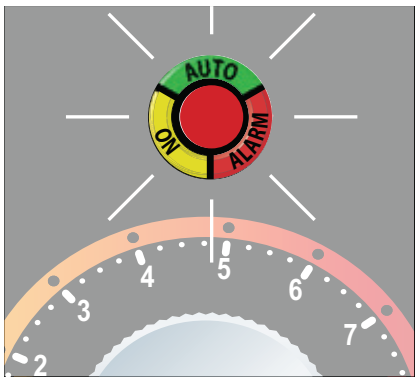

Is this your first start-up after purchase?
If you just bought this Stove, once a fire has been established in your Stove, leave the Stove burning on HI for 30 minutes to allow paint to cure.

After 30 minutes, turn the dial control to OFF and allow your Stove to cool completely. Once cooled, clean the fire pot. Your Stove is now ready to resume normal use.

Using Your Stove



Comfort Settings

Control your comfort with a single dial:

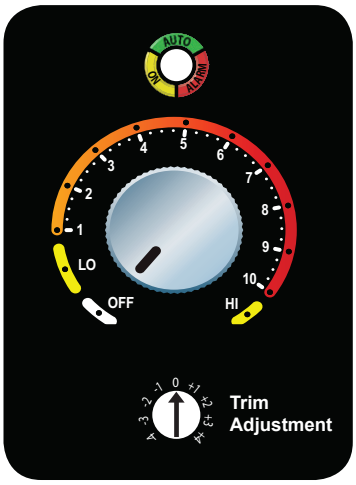

- **OFF setting** - Used to turn your Stove off
- **LO setting** – Your Stove will continue to run on low regardless of room temperature. LED light will be steady amber
- **1 through 10 settings** – Set to your desired comfort level. Once the desired comfort level is achieved the Stove will automatically shut down. When the temperature in the room drops below the desired comfort level, your Stove will automatically restart.
- **HI setting** - Your Stove will continue to run on high regardless of room temperature. LED light will be steady amber.

Pro Tip
If the dial control is turned to the off position and then back on, even if by mistake, your Stove will go through the shutdown process (approximately 15 minutes) and restart.

Trim Adjustment

Trim adjustment is the small dial located below the main dial control. Rotating this dial will adjust the air/fuel ratio and below are examples of when to use it:

- If the fire is too large, lazy or producing black soot, rotate the dial counterclockwise one level at a time and allow 15 minutes for stabilization before making another adjustment
- If your fire is too small and sometimes goes out when there are pellets in the hopper, rotate the dial clockwise one level at a time and allow 15 minutes for stabilization before making another adjustment.

Thermostat
Your PelPro Stove comes with a built-in thermostat system that provides easy temperature adjustments. The Stove is not designed to use a remote control or external thermostat.

Using Your Stove

Turning Your Stove Off

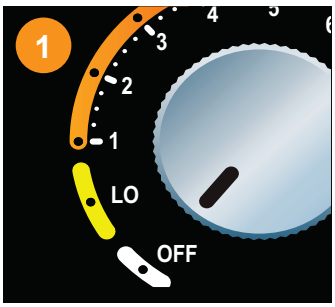

Turn dial to OFF position

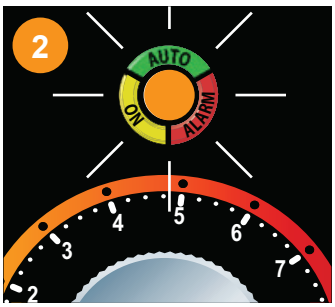

LED light will flash amber rapidly *Early models may have a green continuous blinking light during shutdown sequence.

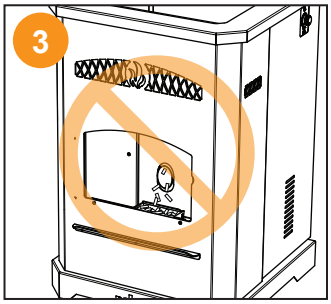

Auger stops feeding pellets

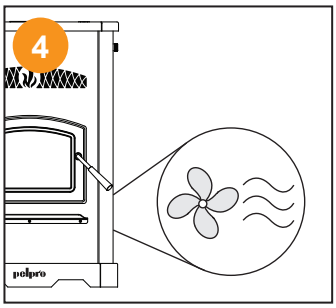

Blowers continue to run until after the exhaust temperature has cooled

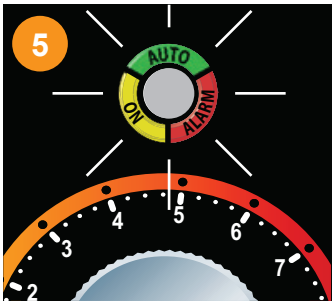

LED light will flash once per second

⚠ CAUTION!
Smoke Hazard

- Turn dial control to OFF, let Stove completely cool and exhaust blower must be off. Now you can unplug Stove before servicing
- Smoke spillage into room can occur if Stove is not cool before unplugging

Maintaining Your Stove

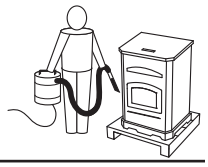

Cleaning & Maintenance

Important:
Regular cleaning helps to assure optimal performance of your Stove. Please refer to page 29 to log your maintenance and cleaning.

Cleaning your Stove
Visit pelprostoves.com or scan this code:

Maintaining your Stove
Visit pelprostoves.com or scan this code:

What You'll Need



Cleaning tool



Phillips head screwdriver



Safety glasses



Gloves



Ceramic glass cleaner & non-abrasive cloth

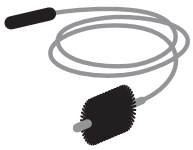

Flue cleaning brush



Metal container with lid

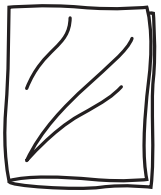

Drop cloth



Ash vacuum

Maintaining Your Stove

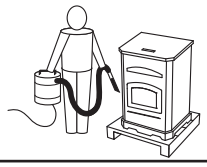

Where, When and How

Disposal of Ashes

Ashes should be placed in a metal container with a tight fitting lid. The closed container of ashes should be placed on a non-combustible floor or on the ground, well away from all combustible materials, pending final disposal. If the ashes are disposed of by burial in soil or otherwise locally dispersed, they should be retained in the closed container until all cinders have been thoroughly cooled.



⚠ WARNING!
Disconnect Stove from power supply before servicing

Zone 1 - Firebox

WEEKLY OR AS NEEDED

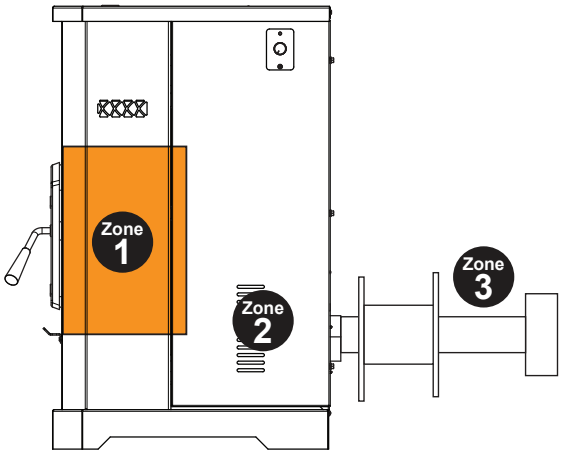

Fire pot

- Remove the fire pot
- Scrape clean and remove ashes
- Replace fire pot

Firebox

- Remove baffles and vacuum residual ash
- Remove ashes from firebox floor

⚠ WARNING!
If using a vacuum to clean Stove, be sure embers are thoroughly cooled to prevent a fire in the vacuum.

Glass

- Apply ceramic glass cleaner
- Use non-abrasive cloth to remove residue

Door Inspection

- The gasket between the glass and firebox should be inspected periodically to make sure there is a good seal.

Maintaining Your Stove

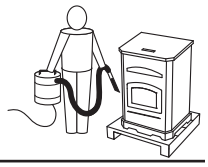

Pro Tip
The type of fuel you are burning will dictate how often you have to clean your fire pot.

If the fuel you are burning has a high dirt or ash content, it may be necessary to clean the fire pot more than once a day.

Poor quality fuel will cause clinkers to form in the fire pot. Clinkers are formed when dirt, ash or a non-burnable substance is heated to 2000 deg. F (1093 deg. C) and becomes glass-like.

Always burn dry fuel. Burning fuel with high moisture content take heat from the fuel and tends to cool the Stove, robbing heat from your home.

Damp pellet fuel can clog the feed system.

⚠ CAUTION!
Handle glass assembly with care and refer to maintenance instructions. **When cleaning glass:**
- Avoid striking, scratching or slamming glass.
- Do NOT clean glass when hot
- Do NOT use abrasive cleaners
- Do NOT operate with glass cracked, broken or scratched



⚠ WARNING!
Glass is 5mm thick high temperature heat resistant ceramic glass.
- DO NOT REPLACE with any other material
- Alternate material may shatter and cause injury

Zone 2 - Stove Body

MONTHLY OR AS NEEDED

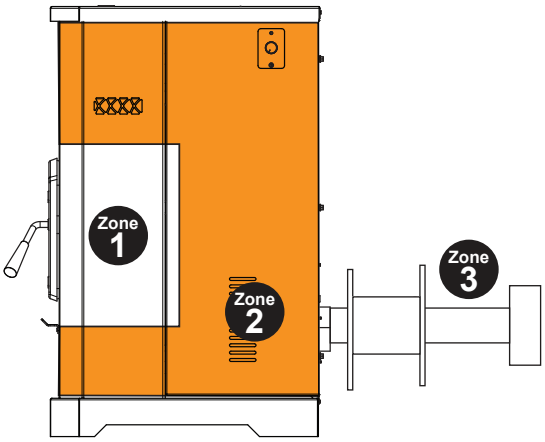

Convection Blower
- Remove right and left side panel to access and remove convection blower
- Vacuum any debris from the fan blades and blower housing

Hopper
- Empty hopper of any pellets
- Vacuum any remaining pellets/debris from the hopper

Maintaining Your Stove

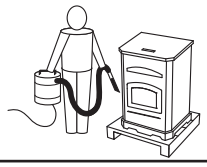

Electrical Components
- Identify and remove any debris
- Verify all connections are secure

ANNUALLY OR AS NEEDED

Exhaust Blower
- Remove left side panel to access and remove exhaust blower
- Vacuum any debris from the fan blades and blower housing

Zone 3 - Venting

ANNUALLY OR AS NEEDED

Termination Cap
- Remove termination cap
- Brush out to remove dust and hard buildup

Vent Components
- Soot, creosote, and fly ash will collect in the exhaust venting system and restrict the flow of the flue gases. This build up will occur more quickly in horizontal sections and elbows.
- Use the appropriate sized chimney brush to remove ash and buildup from the venting

Outside Air Kit
- Ensure there are no obstructions in the outside air kit cap

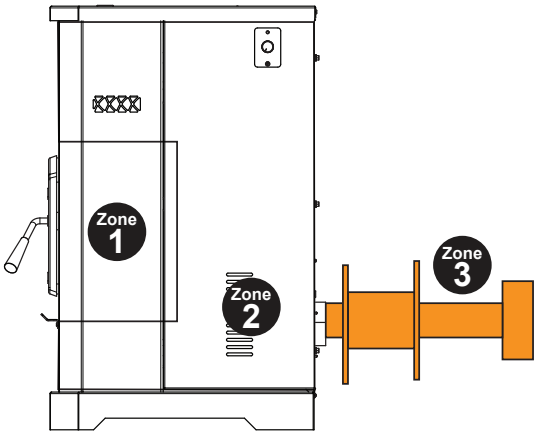

Having Trouble?
Visit the Troubleshooting section of this manual.

⚠ Caution!

When wood pellets are burned at a low temperature, they produces organic vapors which combine with moisture to form creosote vapors.

Creosote vapors condense in the relatively cool chimney flue of a newly-started or a low-temperature fire. As a result, creosote residue accumulates on the flue lining. When more heat is called for, this residue can be ignited, which creates an extremely hot fire in the chimney flue; this may damage the chimney or even destroy your home.

Your chimney should be inspected once every few months during the heating season to determine if a creosote or soot buildup has occurred. If creosote or soot has accumulated, it should be removed to reduce the risk of a chimney fire.

Troubleshooting



Troubleshooting your Stove
Visit pelprostoves.com or scan the code:

Power Related

In the event of a power outage:

- If using a generator, PelPro recommends a steady state generator for best Stove performance.
- This Stove needs 110v to run properly. This Stove has not been tested for use with a third party battery backup.

Pro Tip
Check passages to assure they are clear of ash and obstructions. Poor airflow leads to poor performance of your Stove.

Stove plugged in but no response

- Unplug your Stove
- Check your home's circuit breaker
- Reset snap disc (located between drop tube and hopper (Zone 2) A
- Visually inspect wires, blowers and power cord for breaks or wear to find cause of possible short circuit (Zone 2)

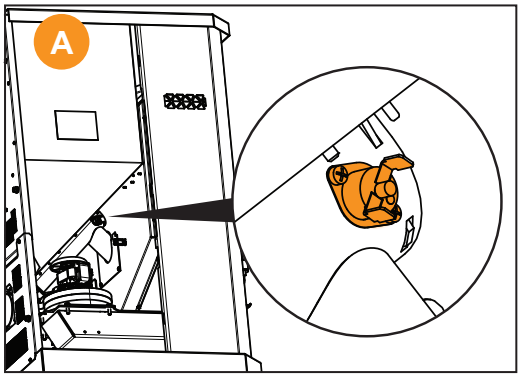

Component (i.e. blower) fails to start or fails to turn off

- Unplug your Stove
- Check all connections and power plugs are secure
- Visually inspect wires, blowers and power cord to find cause of possible short circuit

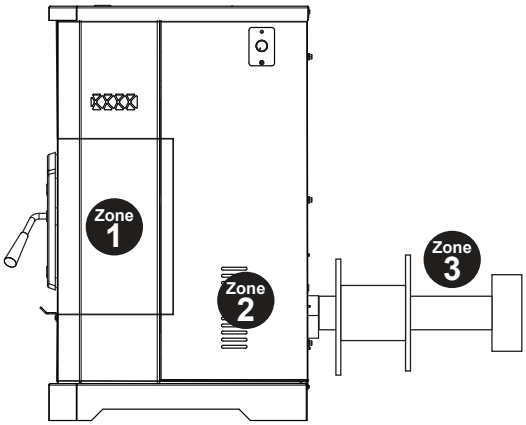

Troubleshooting

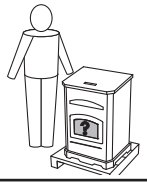

Blockage Related

Black soot on outside of house

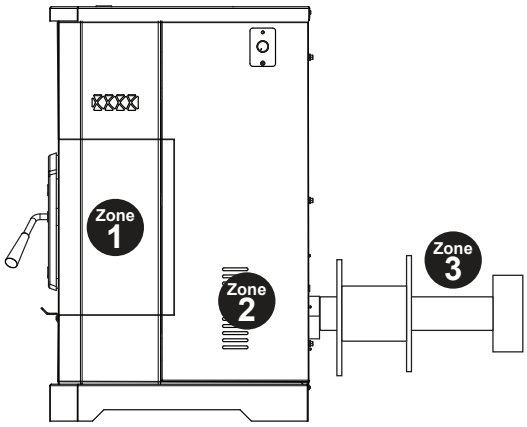

- Confirm exhaust path is clean and clear (Zone 1 and 3)
  - Adjust air/fuel ratio using trim adjustment dial (See page 23 for trim adjustment instructions)
- Ensure termination cap has at least 18” clearance to reduce the effects of soot blow-back on home exterior (ie. siding)—if not able, refer to page 10 for alternate installation options

Rumbling/whistling noise during operation

- Confirm exhaust path is clean and clear (Zone 1 & 3)
  - Adjust air/fuel ratio using trim adjustment dial (See page 18 for trim adjustment instructions)

Stove will not light

- Confirm firebox is clean and clear (Zone 1)
  - Igniter is getting hot (glows orange)
- Inspect Stove body (Zone 2)
  - Confirm fuel is in hopper, close lid securely
  - Remove right side panel to access and confirm vacuum switch is clear and connected at both ends
  - Confirm all exhaust blower connections secure
  - Confirm the feed assembly and motor are clean and clear of debris
- Confirm exhaust path is clean and clear (Zone 3)

Troubleshooting

Blockage Related

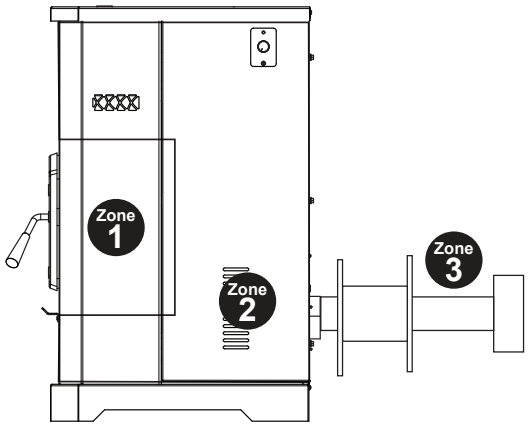

Fire starts but goes out

- Confirm firebox is clean and clear (Zone 1)
  - Ensure fire pot holes are clear
- Inspect Stove body (Zone 2)
  - Confirm exhaust probe is connected
  - Inspect and clean the exhaust outlet
- Confirm exhaust path is clean and clear (Zone 3)

Starts and stops frequently in automatic mode

- Determine if your room is experiencing varying temperatures due to repeated opening/closing of doors or windows—correct if necessary
- Examine Stove body (Zone 2)
  - Inspect ambient probe and confirm that at least 2” is exposed outside of Stove body

Slow or smoky start-up and/or lazy flame

- Confirm exhaust path is clean and clear (Zone 3)
- Examine Stove body (Zone 2)
  - Align igniter so it is properly placed and centered
  - Review fuel quality (see Pellet Fuel information on page 13)

Troubleshooting

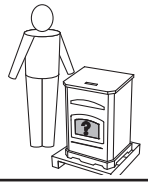

Symptom	Possible Cause	Corrective Action
Igniter does not turn off	Igniter short circuit. The fuse will be blown and upon replacement of the fuse, the igniter will remain on when Stove has power.	Inspect wires, blowers, and power cord to find cause of short circuit. Replace board and failed component.
Feed motor does not shut off	Feed motor short circuit. The fuse will be blown and upon replacement of the fuse, the feed motor will remain on when Stove has power.	Open hopper to stop the feed motor. Inspect wires feed motor, control board, and power cord to find source of short circuit. Replace control board and failed component.
Stove fails to shut off.	Stove running in maximum or minimum	Turn dial control to Off position. See Also, “Feed Motor Does Not Shut Off”. The Stove should go into a shutdown.
Large, lazy flame, orange color. Black ash on glass.	Dirty Stove. Poor fuel quality, high ash content. Incorrect air-fuel adjustment Excessive feeding/Feed Motor locked on	Clean Stove, including fire pot and venting system. Clean exhaust path. Try a different brand of pellets. Turn fuel adjustment trim dial to COUNTERCLOCK-WISE to increase combustion air speed; see trim pot adjustment section. Follow corrective action for feed motor does not turn off symptom.
Excessive fuel spilling over the fire pot into the ash wells and/or excessive flame	Excessive feeding/Feed Motor locked on	Follow corrective action for feed motor does not turn off.

Troubleshooting



Following correction of any alarm, turn the dial control to the OFF position, wait 10 seconds and turn back to desired setting OR unplug the Stove, wait 10 seconds then restore power.

Alarm (LED Flashing RED)	Possible Cause	Corrective Action
1 Flash: Empty Hopper	No fuel is delivered to the fire pot to sustain flame Hopper empty (most likely) Auger Jam (next likely) No vacuum Hopper lid open Flame is evident but the exhaust probe is not able to recognize the hot exhaust temperature Exhaust probe not attached to outlet Exhaust path is dirty	Fill the hopper, inspect the feed tube for jams, inspect the venting and firebox for obstructions and clean if necessary, inspect the exhaust blower to make sure it runs, or close the hopper lid. Inspect and clean the exhaust outlet, firebox, fire pot, and behind the baffles. Inspect the exhaust probe to see if it is securely attached to the side of the exhaust outlet.
2 Flashes: Exhaust Probe Fail *The exhaust probe senses a temperature of less than negative 20 degrees Celsius or above 300 degrees Celsius.*	The exhaust temperature is above or below the acceptable range. Exhaust Probe Failure Not plugged in Failed component	Plug the probe into the board Replace the component
3 Flashes: Ambient Probe Alarm *The ambient probe senses a temperature of less than negative 20 degrees Celsius or above 70 degrees Celsius.*	The ambient temperature is above or below the acceptable range. Ambient Probe Failure Not plugged in Failed component	Plug the probe into the board Replace the component
4 Flashes: Missed Ignition *During the ignition sequence the load does not ignite. The Stove will automatically retry once from the first failed attempt.*	Fuel No fuel Hopper Empty Feed Jam Feed doesn't turn Feed motor disconnected or failed Fire pot Fire pot Dirty so fuel is not near ignition hole in the fire pot Igniter No power Debris in the end of the igniter chamber	 Fill the hopper Inspect and clear jam in the feed tube Inspect the feed motor circuit (hopper lid must be closed, vacuum switch must be closed (ie exhaust blower on), and feed motor must be plugged in. Clean the fire pot Check leads and if the igniter works. Clean the end of the igniter chamber from inside the firebox (removal of the fire pot required for this step).
8 Flashes: Exhaust Over Temperature *The exhaust temperature has exceeded the allowable temperature.*	Fuel Feed Motor Locked On Non-approved fuel used Convection blower Dirty Failed Installation Installation configuration is tight allowing for limited air circulation around the Stove.	Review the feed motor and feed rates. Normal feed motor operation is on between 1* and 4* seconds out of every 7 seconds. (*depending on model and burn rate setting) If the feed motor does not turn off, replace the control board. Review the fuel being used. Clean Replace Review the installation and move if necessary.

Troubleshooting

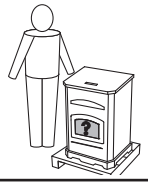

Still having trouble?

Access additional resources at:
pelprostoves.com/troubleshooting



Warranty

If replacement parts are needed, please note warranty coverage begins on the date of purchase. Retain your original receipt as proof of purchase. The warranty period for covered components is as follows:

Components Covered	**Warranty Period** (Parts only, Labor not included)
Electrical	1 Year
Steel Parts (excluding fire pot)	5 Years
All replacement parts are covered for remainder of original warranty period or 90 days, whichever is longer	90 Days

Additional terms and limitations apply. See page 28 for complete warranty information.

Support

Please review the “Maintaining Your Stove” and “Troubleshooting” sections in this manual.

Visit **pelprostoves.com** to access:

- Order replacement parts
- Installation videos
- Troubleshooting videos
- Use and care videos
- Manuals and more

To contact a Consumer Care Specialist, email us at **Info_PelPro@hearthnhome.com** or call **877-427-3316**.

Listings and Certifications

Stove Certification

Series	PP130-B
Laboratory	OMNI Test Laboratories
Safety Report No.	0135PS041S
Type	Solid Fuel Room Stove/Pellet Fuel Burning Type
Standard	ASTM E1509-12 and ULC S627-00, Room Stove Pellet Fuel Burning type and (UM) 84-HUD, Mobile Home Approved.

Note
This installation must conform with local codes.
In the absence of local codes you must comply with **ASTM E1509-12 and ULC S627-00 by OMNI Test Laboratories and (UM) 84-HUD**

⚠ WARNING!
- It is critical to have a working smoke detector installed in the home of Stove operation.
- Smoke alarms that are properly installed and maintained play a vital role in reducing fire deaths and injuries. Having a working smoke alarm reduces the chance of fire related injuries.
- Install at least one carbon monoxide detector on each floor of your home.



⚠ WARNING! Asphyxiation Risk.
DO NOT INSTALL IN A SLEEPING ROOM. Your Stove consumes oxygen in the room.

Note
This wood stove needs periodic inspection and repair for proper operation. It is against federal regulations to operate this wood heater in a manner inconsistent with operating instructions in this manual.

Mobile Home Approved

This Stove is approved for mobile home
Installations **when not installed in a sleeping room and when an outside combustion air inlet is provided**.

- The structural integrity of the mobile home floor, ceiling, and walls must be maintained
- The Stove must be properly grounded to the frame of the mobile home with #8 copper ground wire, and use only listed double-wall connector pipe
- Outside Air Kit provided with each Stove must be installed in a mobile home installation and must remain clear of leaves, debris, ice and/or snow. It must be unrestricted while the Stove is in use to prevent room air starvation which causes smoke spillage.
- The Stove must be secured to the mobile home structure by bolting it to the floor through holes provided at bottom of your cast legs on your Stove.

Listings and Certifications

Glass Specifications

This Stove is equipped with 5mm ceramic glass.
Replace glass only with 5mm ceramic glass. Please contact PelPro for replacement glass.

Electrical Rating (On High)

PP130-B: 120 VAC, 60 Hz, Start 2.6 Amps,
Run 2.3 Amps

BTU & Efficiency Specifications

Model	PP130-B
Emissions Report No.	0135PS041E
EPA Certified	0.53 grams/hr
*HHV Tested Efficiency	81.9%
**BTU Input	11,676 - 49,207 / hr
***Heating Capacity	750 to 1,450 sq. ft. depending on climate zone
Vent Size	3” or 4” L or PL
Hopper Capacity	130 lbs (Approximate)
Fuel	Wood pellets
Shipping Weight	xxx lbs

This manual describes the installation and operation of the Brand PelPro, Model PP130-B wood Stove.
This Stove meets the 2020 U.S. Environmental Protection Agency’s crib wood emission limits for wood Stoves sold after May 15, 2020. Under specific test conditions this Stove has been shown to deliver heat at rates ranging from 9,605 to 40,637 Btu/hr.

* Weighted average HHV efficiency using data collected during EPA emissions test.
**BTU input/output will vary, depending on the brand of fuel you use in your Stove.
**Heating capacity depends on climate zone, structure layout, insulation, windows, etc.

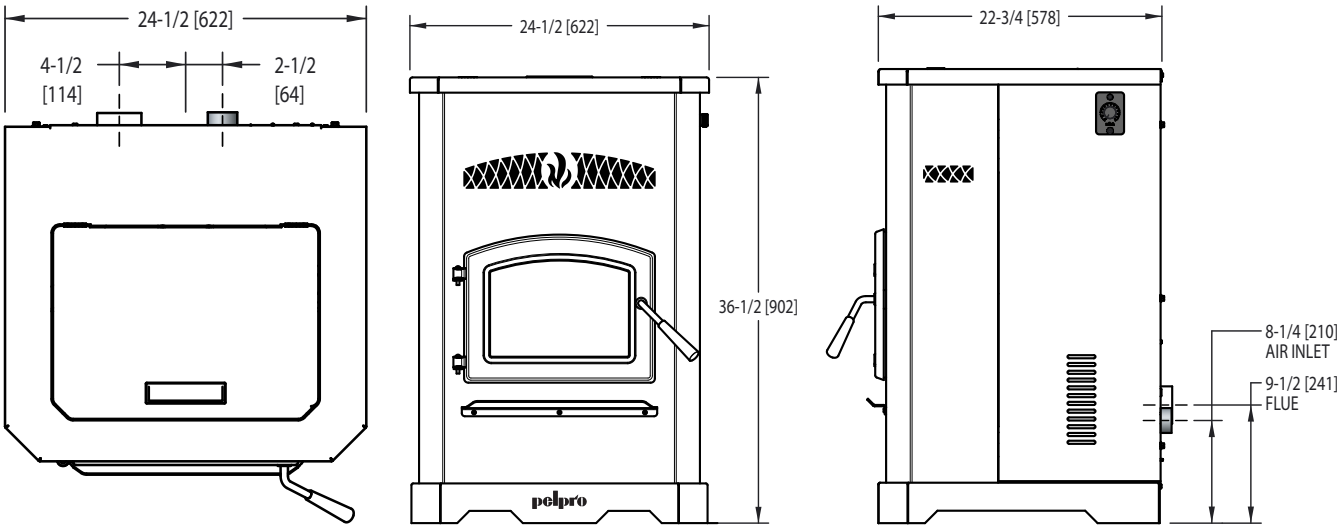

Listings and Certifications

Hearth & Home Technologies, Inc. - PelPro Limited Warranty

Hearth & Home Technologies, Inc. (HHT), on behalf of its PelPro brand, extends the following warranty for PelPro Stoves purchased from an authorized retailer.

If you experience issues with your PelPro Stove, Consumer Care is available to assist you with troubleshooting technical issues. Please contact PelPro Consumer Care at 1-877-427-3316 with any product issues rather than contacting the retailer where you purchased your PelPro Stove.

This warranty covers components of the PelPro Stoves as listed in the table below.

Warranty Coverage:
Subject to the table below, HHT warrants to the owner of the PelPro Stove that the Stove will be free from defects in materials and workmanship at the time of manufacture. After installation, if covered components are found to be defective in materials or workmanship during the applicable warranty period, HHT will replace the covered components.

HHT, at its own discretion, may fully discharge all of its obligations under such warranties by replacing the product itself or refunding the verified purchase price of the product itself. The maximum amount recoverable under this warranty is limited to the purchase price of the product. This warranty is subject to conditions, exclusions, and limitations as described below.

Warranty Period:
Warranty coverage begins on the date of original purchase. The warranty period for covered components is as follows:

Components Covered	Warranty Period (Parts only, Labor not included)
Electrical	1 Year
Steel Parts (excluding fire pot)	5 Years
All replacement parts are covered for remainder of original warranty period or 90 days, whichever is longer	90 Days

Parts Service & Returns:
HHT is proud to offer the best technical and sales support in the industry. If you have any questions about how to operate your Stove or if you need service parts, please visit Pelprostoves.com or call 1-877-427-3316.

Warranty Exclusions:
Warranty does not cover damage or breakage due to misuse, improper handling or modifications. There is no warranty on the paint, glass, fire pot, fire brick, or any gaskets, or against damage caused from corrosion. There is no expressed or implied performance warranty on PelPro Stoves as HHT has no control over the installation, operation, cleaning, maintenance, or type of fuel burned.

Some states do not allow exclusion or limitation of incidental or consequential damages, or limitations of implied warranties, so the limitations or exclusions set forth in this limited warranty may not apply to you. This limited warranty gives you specific legal rights and you may have other rights, which vary from state to state. Warranty is void if the PelPro Stove has not been installed, operated, cleaned and maintained in strict accordance with HHT's instructions.

NEITHER HHT NOR THE RETAILER FROM WHO YOU PURCHASED YOUR PELPRO Stove SHALL BE RESPONSIBLE, LEGALLY OR OTHERWISE, FOR THE INCIDENTAL OR CONSEQUENTIAL DAMAGE TO PROPERTY OR PERSONS RESULTING FROM THE USE OF THIS PRODUCT. ANY WARRANTY IMPLIED BY LAW, INCLUDING BUT NOT LIMITED TO IMPLIED WARRANTIES OF THE MERCHANTABILITY OR FITNESS, SHALL BE LIMITED TO ONE (1) YEAR ON THE BREACH OF THIS WARRANTY OR ANY TYPE OF WARRANTY EXPRESSED OR IMPLIED BY LAW. HHT SHALL IN NO EVENT BE LIABLE FOR ANY SPECIAL, INDIRECT, CONSEQUENTIAL OR OTHER DAMAGES OF ANY NATURE WHATSOEVER IN EXCESS OF THE ORIGINAL PURCHASE PRICE OF THIS PRODUCT. ALL WARRANTIES BY HHT ARE SET FORTH HEREIN AND NO CLAIM SHALL BE MADE AGAINST HHT ON ANY ORAL WARRANTY OR REPRESENTATION.

Service Parts — PP130

Pellet Stove

Beginning Manufacturing Date: Apr 2014
Ending Manufacturing Date: Active

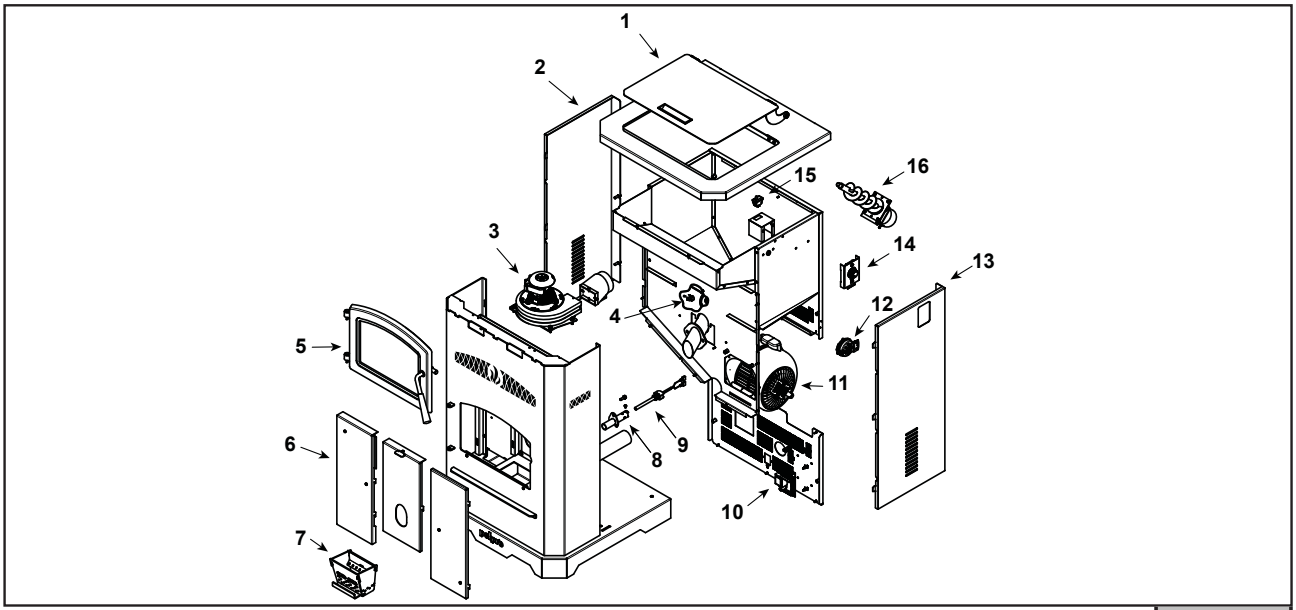

IMPORTANT: THIS IS DATED INFORMATION. When requesting service or replacement parts for your appliance please provide model number and serial number. All parts listed in this manual must be ordered from a dealer.

ITEM	DESCRIPTION	COMMENTS	PART NUMBER	Stocked at Depot
1	Hopper Lid Assembly		SRV7086-019	
	Hopper Extension		PPHE200	
	Handle, Hopper Lid		SRV200-0110	
2	Side Curtain, Left Hand		SRV7086-154	
3	Exhaust Combustion Blower		812-4400	Y
	Gasket, Between Blower Housing and Stove		SRV240-0812	Y
	Gasket, Between Blower Housing and Motor		812-4710	Y
4	Snap disc, Manual Reset		SRV230-0080	Y
5	Door Assembly		SRV7086-021	Y
6	Baffle Kit		SRV7077-006	
7	Firepot		SRV7077-003	Y
8	Igniter Chamber Kit		SRV7077-110	
9	Igniter Kit		SRV7000-660	Y
10	Control Board		SRV7077-050	Y
11	Convection Blower		KS-5020-1052	Y
	Convection Blower Bracket		SRV7081-210	
12	Vacuum Switch		SRV7000-531	Y
	Vacuum Hose, 5/32 ID	3 Ft	SRV240-0450	Y
13	Side Curtain, Right Hand		SRV7086-153	Y
14	Dial Control		SRV7083-036	Y
	Wire Harness, Dial Control		SRV7000-667	Y
15	Hopper Switch		SRV7000-612	Y

See Following page for additional servcie parts

Service Parts **PP130**

Beginning Manufacturing Date: Apr 2014
Ending Manufacturing Date: Active

#5 Door Assembly

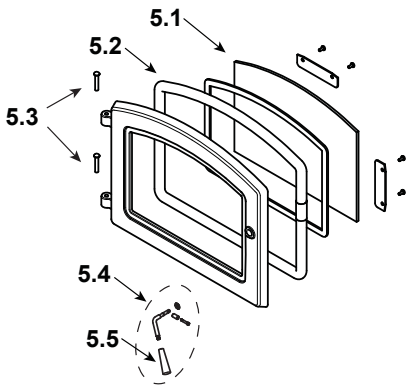

IMPORTANT: THIS IS DATED INFORMATION. When requesting service or replacement parts for your appliance please provide model number and serial number. All parts listed in this manual must be ordered from a dealer.

ITEM	DESCRIPTION	COMMENTS	PART NUMBER	Stocked at Depot
5	Door Assembly		SRV7086-021	Y
5.1	Glass Assembly		SRV7081-173	
5.2	Rope, Door, 3/4" x 84"		832-1680	
5.3	Hinge Pins	Pkg of 2	433-1590/2	
5.4	Threaded Handle Assembly Kit		SRV7093-024	Y
5.5	Handle Black Phenolic Kit		KS-5140-1442	Y

#16 Feed Assembly Kit

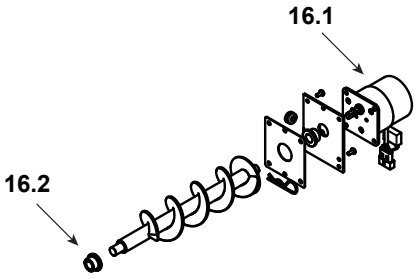

16	Feed Assembly Kit		SRV7077-014	Y
16.1	Feed Motor		SRV7000-670	Y
16.2	Feed Shaft Bushing	Pkg of 2	7000-600/2	Y
	Power Cord		812-1180	Y
	Ambient Probe		SRV7000-668	Y
	Exhaust Probe		SRV7000-669	Y
	Wire Harness		SRV7093-184	Y
	Wire Clip	Pkg of 10	7000-400/10	Y

Reference Materials

We recommend that you record the following information for your heating Stove:

Date purchased/installed: _____
(Attach proof of purchase)

Serial Number:_____Location on Stove:_____

Store purchased from:_____

Store Location: _____

Maintenance Log:

_____

_____

_____

_____

_____

_____

_____

_____

_____

_____

_____

_____

_____

_____

Reference Materials

Maintenance Log:

Reference Materials



Maintenance Log:

Reference Materials



Maintenance Log:



Hearth & Home Technologies®
352 Mountain House Road
Halifax, PA 17032

Model: PP 130-B
Hearth & Home Technologies
352 Mountain House Road
Halifax, PA 17032

Owner's Manual

PP 150





PP150 Pellet Stove

Owner's Manual

⚠ WARNING!

Please read this entire manual before installation and use of this pellet fuel-burning room Stove, and save for future reference. Failure to follow these instructions could result in property damage, bodily injury or even death. Contact local building or fire officials about restrictions and installation inspection requirements in your area.

Note: To obtain a French translation of this manual, please contact your dealer or visit www.pelprostoves.com. Pour obtenir une traduction francaise de ce manuel, s'il vous plait contracter votre revendeur ou visitez www.pelprostoves.com

Get to Know Your PelPro® Stove

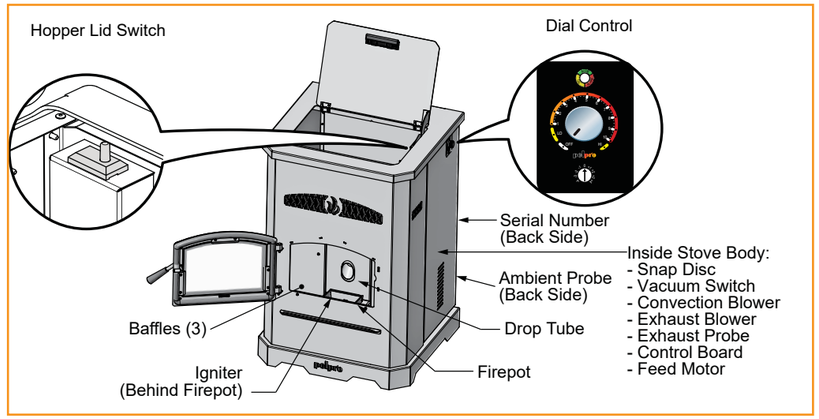

Safety First!

Safety Alert Key: It is important to pay attention to alerts you will see throughout this manual to ensure your safety.

- **DANGER!** Indicates a hazardous situation which, if not avoided will result in death or serious injury.
- **WARNING!** Indicates a hazardous situation which, if not avoided could result in death or serious injury.
- **CAUTION!** Indicates a hazardous situation which, if not avoided, could result in minor or moderate injury.
- **NOTICE:** Indicates practices which may cause damage to the Stove or to property.
- **Pro Tip:** Indicates additional information to help you better understand your Stove and optimize its performance.

NOTICE:

Fire Risk

Pelpro disclaims any responsibility, and the warranty and agency listing will be voided, by the below actions.

DO NOT:

- Install or operate damaged Stove
- Modify Stove
- Install other than as instructed by the manufacturer
- Operate the Stove without fully assembling all components
- Over fire (burning at higher temperatures than recommended causing permanent damage to the Stove)
- Install any component not approved by the manufacturer
- Install parts or components not listed or approved
- Disable safety switches

Improper installation, adjustment, alteration, service or maintenance can cause injury or property damage. For assistance or additional information, consult a qualified installer, service agency or your dealer.

DANGER!

HOT SURFACES!

Glass and other surfaces are hot during operation AND cool down.

Hot glass will cause burns.

- Do not touch glass until it is cooled
- NEVER allow children to touch glass
- Keep children away; if you expect that children may come into contact with this Stove, we recommend a barrier such as a decorative screen (see your retailer for suggestions)
- CAREFULLY SUPERVISE children in same room as Stove
- Alert children and adults to hazards of high temperatures

High temperatures may ignite clothing or other flammable materials.

- Keep clothing, furniture, draperies and other flammable materials away

WARNING

This product and the fuels used to operate this product (wood), and the products of combustion of such fuels, can expose you to chemicals including carbon black, which is known to the State of California to cause cancer, and carbon monoxide, which is known to the State of California to cause birth defects or other reproductive harm. For more information go to: WWW.P65Warnings.ca.gov

Table of Contents

- Get to Know Your Stove
- California - Prop65

Getting Started 4

- Pallet Removal
- What's Included
- What You'll Need

Installing Your Stove 6

- Getting Ready
- Vent Termination Clearances
- Placing Your Stove
- Venting Your Stove

Using Your Stove 14

- Fuel Tips
- Starting your Stove the first time
- Starting your Stove from an empty hopper
- What Do the Blinking Lights Mean?
- Comfort Settings
- Trim Adjustment
- Turning Your Stove Off

Maintaining Your Stove 21

- Cleaning & Maintenance
- What You'll Need
- Where, When and How

Replacement Parts 25

Troubleshooting 29

- Power Related
- Blockage Related
- Warranty

Support 35

- Contact information
- Ordering Parts

Listings and Certifications 36

- Stove Certification
- Mobile Home Approved
- Glass Specifications
- Electrical Rating (On High)
- BTU & Efficiency Specifications
- Stove dimensions
- Warranty

Reference Materials 39

- Service Part List
- Maintenance Log

Getting Started



Pallet Removal

There are bolts holding your PelPro Stove in place on the pallet. To remove your Stove from the pallet:

Pallet Removal
Visit pelprostoves.com
or scan the code:

1

Loosen the three retaining bolts on the back of the Stove and remove the right and left side panels.

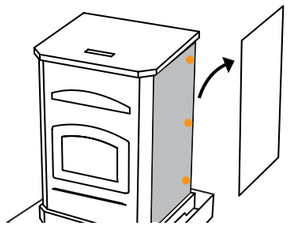

2

Using a 5/16 inch wrench, on each side of the Stove remove the two bolts.

Remove shipping brackets by reaching into Stove in the same area as the just removed bolts.

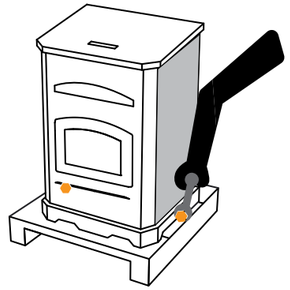

WARNING!
Inspect Stove and components for damage. Damaged parts may impair safe operation.
- Do NOT install damaged components.
- Do NOT install incomplete components.
- Do NOT install substitute components.

Report damaged parts to dealer.

CAUTION!
Risk of cuts, abrasions or flying debris. Wear protective gloves & safety glasses during install. Metal edges are sharp.

What's Included


Owner's manual


Cleaning tool

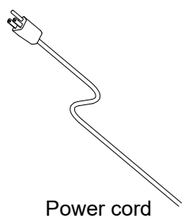
Power cord


Door handle

Online Installation & Trouble Shooting Videos

Outside air kit components:


2" Flex hose

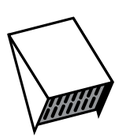
Termination Cap

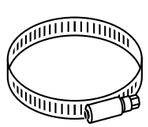
Hose clamp


Screws (4)

Getting Started

Getting Started



What You'll Need

Tools & Supplies

- High temperature silicone (500°F+)
- Level
- Phillips screwdriver
- Plumb line
- Tape measure
- Framing square
- Reciprocating saw
- Electric drill & bits
- Caulking gun
- Stud finder
- Utility knife
- Pliers
- Flashlight
- Hammer

Safety Equipment
Recommended for all installation and maintenance steps.


Gloves


Safety glasses


Close-toed shoes

Pellet Vent Pipe
Must be an approved 3" or 4" diameter Type "L" or "PL" vent. Use 4" diameter vent if flue height is over 15' or if installation is over 3,000ft. above sea level.

WARNING!
Fire Risk. NO OTHER vent components may be used. Substitute or damaged vent components may impair safe operation.

Floor Protection
Non-combustible material (such as a hearth pad) is required underneath your Stove.

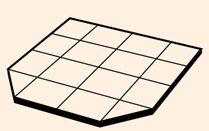

Surge Protector
Protect the electrical components of your Stove by using a surge protector.

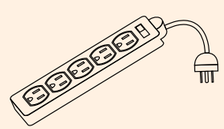

Pellet Fuel
Use only wood pellets in your Stove. For best performance, use premium, low-ash pellets (<1%) less than 1.5" in length and avoid the dusty bits and pieces of pellets in the bottom of the bag.



Installing Your Stove



Getting Ready

Pro Tip
We highly recommend your Stove and pellet vent pipe be installed by a professional installer.
Your retailer can make recommendations for you.
Installation MUST comply with local, regional, state and national codes and regulations.
Consult insurance carrier, local building inspector, fire officials or authorities having jurisdiction over restrictions, installation inspection and permits.

Placement
Where you place your Stove can significantly affect its performance and safety.

A **Your Home Acts Like a Chimney**
We recommend that you help your home by:
1. Using a minimum of 5 feet of vertical venting
2. Use the supplied outside air kit
3. Install your Stove on a main floor location

This will:
- Help your Stove breathe
- Minimize smoke leakage in the house
- Enhance performance

Clearance to Combustibles
The space between your Stove and the items in your home that could burn. Materials such as:
B
- Wood
- Sheet rock (drywall)
- Carpet

A

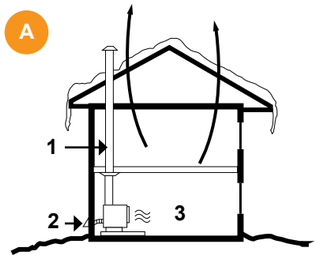

B

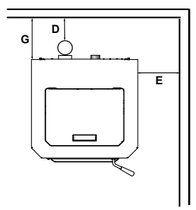

WARNING!
Asphyxiation Risk.
DO NOT INSTALL IN A SLEEPING ROOM. Consumes oxygen in the room.

For Canada, the installation must conform to CAN/CSA-B365

Installing Your Stove

Getting Ready (Continued)

C **Pellet Venting**
Adding bends in the exhaust path restricts air flow, reduces performance and provides a collection point for ash deposits requiring more frequent cleaning.

C

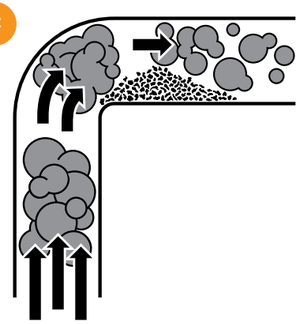

CAUTION
- Do not connect to any air distribution duct or system
- Do not install a flue damper in the exhaust venting system of this Stove
- Do not connect this Stove to a chimney flue serving another Stove
- The structural integrity of the manufactured home floor, wall and ceiling/roof must be maintained

REQUIRED:
Use only 3” or 4” type “L” or “PL” pellet pipe.

Pro Tip
This Stove can be installed with a 3 to 6 inch (76-152mm) Top Vent Offset Adapter Kit. The 3 to 6 inch (76-152mm) Top Vent Offset Adapter are tested to use 24 gauge single wall flue connector or Listed double wall flue connector to Class A Listed metal chimneys, or masonry chimneys meeting International Conference of Building Officials (ICBO) standards for solid fuel Stoves.

Caution, do not pass connector pipe through a combustible wall or ceiling. Please refer to connector pipe installation instructions for details.

Installation Video

Visit pelprostoves.com or scan this code:

Installing Your Stove



Vent Termination Clearances

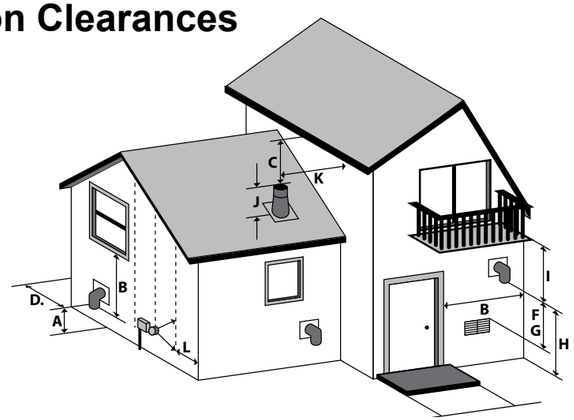

	Clearances	
A	12”	Clearance above grade, veranda porch, deck or balcony (Including vegetation and mulch)
B	12”	Clearance beside or below any windows or doors that open
	12”*	Clearance above any window or door that opens
C	18”	Vertical clearance to ventilated soffit located above the terminal within a horizontal distance of 2 feet from the center line of the terminal
D	12”	Clearance to an outside corner wall
F	12”, 48” no outside air kit	Clearance to a non-mechanical air supply inlet to the building or a combustion air inlet to any other Stove
G	36”	Clearance to a mechanical air supply inlet
H	84”**	Clearance above a paved sidewalk or paved driveway located on public property
I	12”**	Clearance under a veranda, porch, deck or balcony
J	12”	Clearance above the roof
K	24”	Clearance from an adjacent wall including neighboring buildings
L	36” within a height of 15 feet above the meter / regulator assembly	Clearance to each side of center line extended above natural gas or propane meter / regulator assembly or mechanical vent

*Recommended to prevent condensation on windows and thermal breakage. **This is a recommended distance. For additional requirements check local codes.

NOTICE:
Do NOT terminate vent:

- In any location that will allow flue gases or soot from entering or staining the building
- In any location which could create a nuisance or hazard
- In any enclosed or semi-enclosed area such as a carport, garage, attic, crawl space, under a sun deck or porch or narrow walkway
- Closely fenced area, or any location that can build up a concentration of fumes such as a stairwell, covered breezeway, etc.

NOTICE:
Do NOT terminate below an air inlet.

- It is recommended that at least 60” (1.52m) of vertical pipe be installed when Stove is vented directly through a wall—this will create a natural draft, which will help prevent the possibility of smoke or odor venting into the home during a power outage
- It will also keep exhaust from causing a nuisance or hazard by exposing people or shrubs to high temperatures
- The safest and preferred venting method is to extend the vent vertically through the roof or above the roof

Installing Your Stove

Installing Your Stove



Placing Your Stove

1 It is necessary to install **EMBER PROTECTION**; a Type 1 floor protector for this Stove.

The Floor protector must be non-combustible material, extending beneath Stove with a minimum of 6 inches (152mm) in front of glass and 6 inches (152mm) to both sides of the fuel loading door. Open the door and measure 6 inches (152mm) from the side edge of the opening in the face of the Stove.

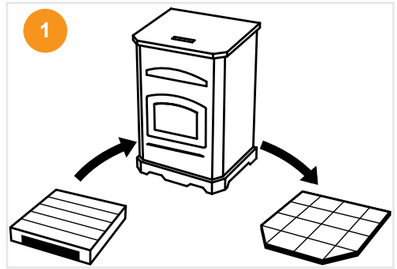

Notice: Be careful to protect the bottom of the Stove and floor surfaces when moving the Stove. Bottom edges of Stove are sharp and can scratch surfaces.

Notice: Clearances may only be reduced by means approved by the regulatory authority having jurisdiction.

2 Hearth pad minimum requirements:

USA Hearth Pad Requirements		Inches	mm
A	Sides	2	51
B	Back	2	51
C	Front	6	152

Canada Hearth Pad Requirements		Inches	mm
A	Sides	6	152
B	Back	2	51
C	Front	6	152

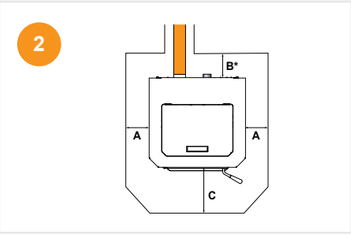

Non-combustible floor protection extending beneath the flue pipe is required with horizontal venting or under the top vent adapter with vertical installation.

*Non-combustible floor protection must extend 2 inches (51mm) beneath the flue pipe when installed horizontal venting or under the top vent adapter with vertical installation. CANADA REQUIRED, USA RECOMMENDED.

Installing Your Stove



3 Confirm required clearances to combustibles:

Vertical Installations (Interior Flue)			
Straight back against wall		Inches	mm
D	Back wall to pellet pipe	3	76
E	Side wall to Stove	9	229

Corner Installation			
Straight back against wall		Inches	mm
F	Walls to Stove	3	76

Horizontal Installations			
Straight back against wall		Inches	mm
G	Back wall to Stove	3	76
E	Side wall to Stove	9	229

3

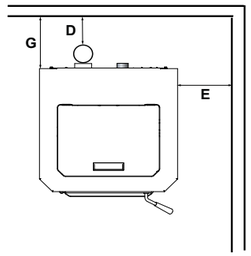

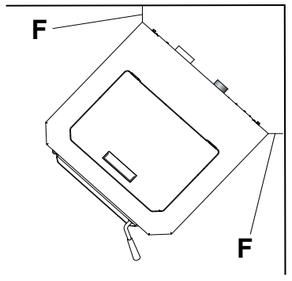

4 Alcove:

		Minimum*		Maximum	
		Inches	mm	Inches	mm
H	Height	52	1321	n/a	n/a
I	Width	42-1/2	1080	n/a	n/a
J	Depth**	n/a	n/a	25-3/4	654

*All minimums listed are to a combustible surface.

**Front of stove must be flush or extend past the alcove front.

4

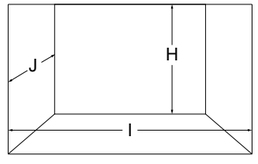

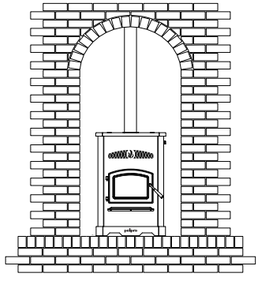

Installing Your Stove



Venting Your Stove

⚠ CAUTION!
Take appropriate precautions to locate utilities within the wall and avoid contact.

1. **Mark and cut wall for venting penetration on exterior wall (if needed).**
2. **Install wall thimble (sold separately) per manufacturer requirements.**
3. **Install venting. (For additional installation options visit pelprostoves.com)**
4. **Use silicone to create an effective vapor barrier at the location where the chimney or other component penetrates to the exterior of the structure.**

Vertical - Interior, Preferred Installation

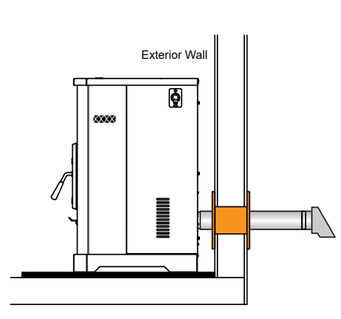

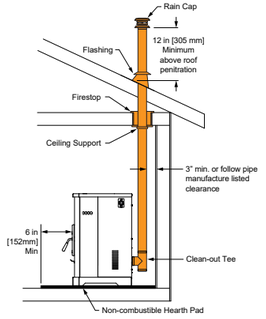

Exterior - Optional Installations

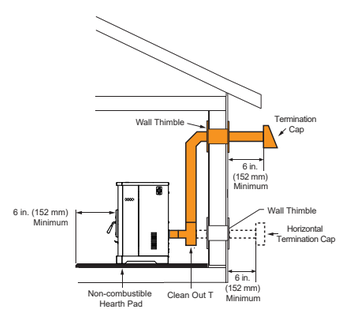

NOTE: In Canada when using a factory-built chimney it must be safety listed, Type UL103 HT (2100°F) CLASS "A" or conforming to CAN/ULC-S629M, STANDARD FOR 650°C FACTORY-BUILT CHIMNEYS.

Pro Tips

- See venting manufacturer's required clearances to combustibles
- For horizontal installations, the minimum clearance from exterior to termination cap is 6"—you may want to increase to 18" clearance to minimize soot blow back on home exterior.

Install vent at clearances specified by the manufacturer

⚠ WARNING!
Do not terminate venting in any enclosed or semi-enclosed area such as: a carport, garage, attic, crawl space, under a sun deck or porch, narrow walkway or closely fenced area, or any location that can build up a concentration of fumes such as a stairwell, covered breezeway, etc.

⚠ CAUTION!
Ensure that your Stove venting terminates above your Stove. The following may occur:
• Your Stove will not draft properly
• Smoke may seep in your house
• Excessive sooting

Installing Your Stove



Venting Your Stove

The maximum horizontal venting allowed with no vertical venting attached is 48 inches including one 90° elbow or two 45° elbows. Addition of any horizontal venting beyond 48 inches requires a minimum 60 inches of additional vertical vent. Horizontal sections of vent pipe should have a 1/4 inch rise per foot. We recommend using the shortest venting and fewest elbows possible when venting horizontal.

We recommend the use of 4 inch vent with any installation requiring more than two 90° elbows, or more than 15 feet of venting.

⚠ WARNING!
Fire Risk.



- Only LISTED venting components may be used
- NO OTHER vent components may be used. Substitute or damaged vent components may impair safe operation.

Notice:
These are guidelines for successful venting of your pellet Stove. The more vertical rise you can obtain in your system, the better it will perform. Horizontal vent runs can accumulate ash and will need to be cleaned more often. Try to keep them as short as possible.

- **45° elbow is equivalent to 1 foot of straight pipe**
- **90° elbow is equivalent to 3 feet of straight pipe**

ONE 90° ELBOW		
Total Horizontal	Minimum Vertical	Vent Diameter
4	0	3
5	5	3
6	6	3
7	7	3
8	8	4
9	9	4
10	10	4
11	11	4
12	12	4
13	13	4
14	14	4
15	15	4
16	13	4
17	17	4
18	18	4
19	19	4

TWO 90° ELBOWS		
Total Horizontal	Minimum Vertical	Vent Diameter
2	5	3
3	6	3
4	7	3
5	8	3
6	9	3
7	10	4
8	11	4
9	12	4
10	13	4
11	14	4
12	15	4
13	16	4
14	17	4
15	18	4

THREE 90° ELBOWS		
Total Horizontal	Minimum Vertical	Vent Diameter
2	11	4
3	12	4
4	13	4
5	14	4
6	15	4
7	16	4
8	17	4
9	18	4
10	19	4
11	20	4

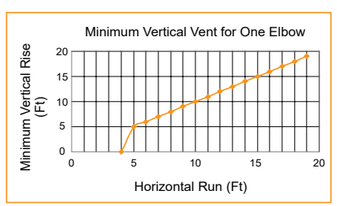

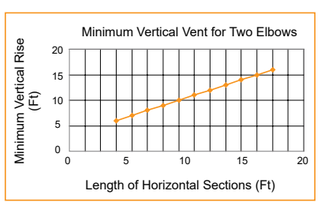

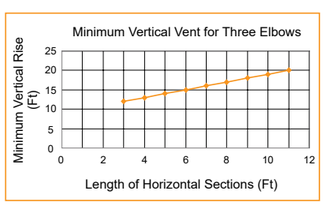

Installing Your Stove

Installing Your Stove



5 Install pellet venting through wall and connect vent/pipe to Stove **A**

- Some venting manufacturers offer pellet Stove adapters for their venting for easier installation
- Seal all pipe joints using high-temp silicone (500°+)
- Secure exhaust venting system to the Stove with at least 3 screws or rivets per the pipe manufacturer's instructions. Also secure all connector pipe joints with at least 3 screws through each joint.
- Install termination cap
- Confirm all required Stove clearances to combustibles

A

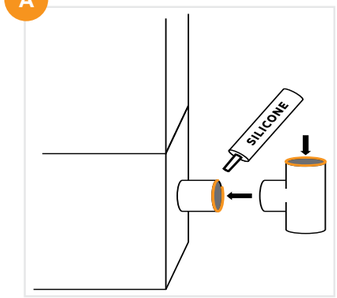

Pro Tip
Installing a clean-out "T" (sold separately) to the rear of your Stove, when venting vertically can save time during cleaning.

6 **Install outside air kit (included)**
For optimal performance, PelPro recommends the outside air kit for all installations. Outside air kit is required for all mobile/manufactured home installations.

Install through wall **B**

- Maintain clearances from exhaust
- Remove knock out in the rear of Stove
  - Attach flex pipe to outside air connection on Stove
  - Use hose clamp
  - Route tube outside the structure
  - Attach cap
  - Secure to outside wall with appropriate fasteners

B

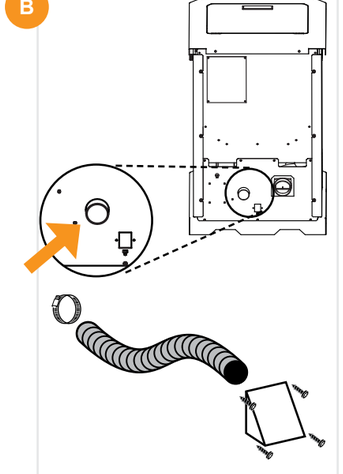

Take a Break
Inspect your work:

_____ Confirm clearances to combustibles are maintained

_____ Pipe joints are secure and properly sealed

_____ Outside air kit installed properly

_____ Confirm termination clearances



⚠ CAUTION!
Never draw outside combustion air from:

- Wall, floor or ceiling cavity
- Enclosed space such as an attic, garage or crawl space.

Using Your Stove



Fuel Tips

Fuel Material and Fuel Storage
Pellet fuel quality can greatly fluctuate. We recommend that you buy fuel in multi-ton lots whenever possible. However, we do recommend trying various brands before purchasing multi-ton lots to ensure your satisfaction. Store fuel in dry location not within clearances to combustibles of your Stove.

Fuel Material

- Made from sawdust or wood by-products
- Depending on the source material it may have a high or low ash content.

Higher Ash Content Material

- Hardwoods with a high mineral content
- Fuel that contains bark
- Standard grade pellets or high ash pellets

Lower Ash Content Material

- Most softwoods
- Fuels with low mineral content
- Most premium grade pellets

Pro Tip
We recommend the use of Pellet Fuels Institute certified pellet fuel with this product.

Your Stove has a manufacture-set minimum low burn rate that must not be altered. It is against federal regulations to alter this setting or otherwise operate your Stove in a manner inconsistent with operation instructions in this manual.

Using Your Stove

Using Your Stove



Starting your Stove the first time

What to Expect

1. Combustion blower will turn on
2. Igniter will turn on
3. Pellets will drop, smoke may occur in firebox but will evacuate, and flame will appear in fire pot.
4. Convection blower will automatically turn on after the Stove heats up. Convection blower will continue to run even after your Stove has been shut down.

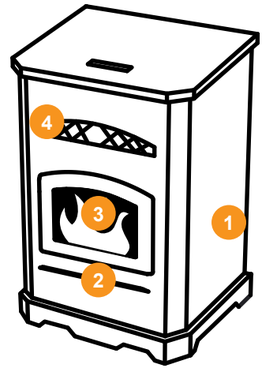

Pro Tips

- Odors and vapors are released during initial startup after purchase; burning your Stove on HI for 30 minutes will allow the paint to cure. Open windows or doors for air circulation until burn off is complete.
- During start up and normal operation your Stove's front door must be closed
- Priming is only required the first time your Stove is lit, or after a FUEL FEED ALARM.



WARNING!
Fire Risk
Keep combustible materials, gasoline and other flammable vapors and liquids clear of Stove.

- Do NOT operate Stove with door open
- Do NOT operate Stove with fire pot floor open
- Do NOT store flammable materials in the Stove's vicinity
- Do NOT use gasoline, lantern fuel, kerosene, charcoal lighter fluid or similar liquids or gels to start or "freshen up" a fire in this Stove

Keep all such liquids well away from the Stove while it is in use as combustible materials may ignite.



WARNING!
HOT SURFACES! Glass and other surfaces are hot during operation AND cool down.
Hot glass will cause burns.

- Do not touch glass until it is cooled
- NEVER allow children to touch glass
- Keep children away
- CAREFULLY SUPERVISE children in same room as fireplace
- Alert children and adults to hazards of high temperatures
- High temperatures may ignite clothing or other flammable materials
- Keep clothing, furniture, draperies and other flammable materials away

Using Your Stove



Use and Care
Visit pelprostoves.com or scan this code:

Important:
Allow up to 20 minutes for your Stove to start.

1 Confirm fire pot is properly positioned

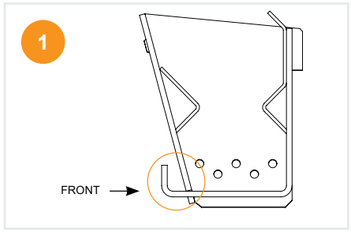

2 Confirm three baffles inside firebox are secure, placing the side baffles before the center

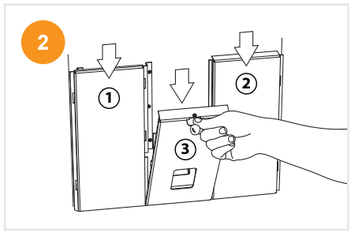

3 Add some pellets to hopper and fully close lid

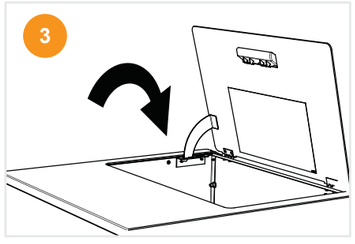

4 Ensure dial control is set in off position.

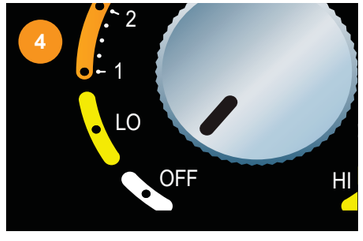

WARNING! Shock hazard.
- Plug directly into properly grounded 3 prong receptacle
- Do NOT route cord under or in front of Stove
- Recommend the use of a surge protector

Using Your Stove



Starting your Stove from an empty hopper

5 Plug in your Stove

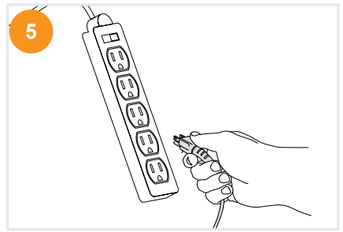

6 Wait 1 minute - LED light will start flashing green once per second.



7 **Prime your Stove:**
1) Quickly turn the dial control from OFF to HI
2) Back to OFF
3) Then back to HI

The feed motor will run continuously for two minutes and the LED light will be solid green. Once primed, pellets will drop into the fire pot and the LED light will blink green as ignition starts. This process can take up to 20 minutes.



CAUTION:
During this process DO NOT:
- Try to restart, manually add pellets or use any type of accelerant

Using Your Stove

What Do the Blinking Lights Mean?

Green & Amber - Normal Operation

- Green, Steady On - Feed system is priming
- Green, 1 Blink - Stove is off and ready
- Green, Continuous Blinking - Stove is in the start up/ignition sequence
- Green, Varies Blinks - Varies depending on burn rate
- Amber, Steady On - Stove is set and running at either the minimum or maximum power levels
- Amber, Continuous Blinking - Stove is in the shutdown sequence. *Early models may have a green continuous blinking light during shutdown sequence.

Red - Operational Issue - Refer to troubleshooting

- Red, 1 Blink - Empty hopper, refer to troubleshooting
- Red, 2 Blinks - Exhaust probe alarm, check connections or refer to troubleshooting
- Red, 3 Blinks - Ambient probe alarm, check connections or refer to troubleshooting
- Red, 4 Blinks - Missed ignition, refer to troubleshooting
- Red, 8 Blinks - Exhaust gas over temperature, refer to troubleshooting

If your Stove does not ignite on the initial burn, the LED light will blink red 4 times indicating a missed ignition.

1. Turn your Stove to off, remove and clean the fire pot
2. Confirm fire pot is properly positioned
3. Prime your Stove per previous instructions

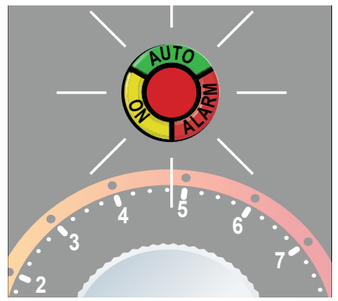

Is this your first start-up after purchase?
If you just bought this Stove, once a fire has been established in your Stove, leave the Stove burning on HI for 30 minutes to allow paint to cure.

After 30 minutes, turn the dial control to OFF and allow your Stove to cool completely. Once cooled, clean the fire pot. Your Stove is now ready to resume normal use.

Using Your Stove

Using Your Stove

Comfort Settings

Control your comfort with a single dial:

- **OFF setting** - Used to turn your Stove off
- **LO setting** – Your Stove will continue to run on low regardless of room temperature. LED light will be steady amber
- **1 through 10 settings** – Set to your desired comfort level. Once the desired comfort level is achieved the Stove will automatically shut down. When the temperature in the room drops below the desired comfort level, your Stove will automatically restart.



- **HI setting** - Your Stove will continue to run on high regardless of room temperature. LED light will be steady amber.

Pro Tip
If the dial control is turned to the off position and then back on, even if by mistake, your Stove will go through the shutdown process (approximately 15 minutes) and restart.

Trim Adjustment

Trim adjustment is the small dial located below the main dial control. Rotating this dial will adjust the air/fuel ratio and below are examples of when to use it:

- If the fire is too large, lazy or producing black soot, rotate the dial counterclockwise one level at a time and allow 15 minutes for stabilization before making another adjustment
- If your fire is too small and sometimes goes out when there are pellets in the hopper, rotate the dial clockwise one level at a time and allow 15 minutes for stabilization before making another adjustment.

Thermostat
Your PelPro Stove comes with a built-in thermostat system that provides easy temperature adjustments. The Stove is not designed to use a remote control or external thermostat.

Using Your Stove

Turning Your Stove Off



Turn dial to OFF position

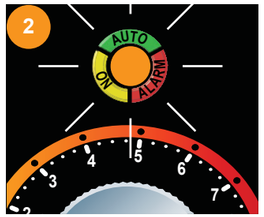

LED light will flash amber rapidly *Early models may have a green continuous blinking light during shutdown sequence.

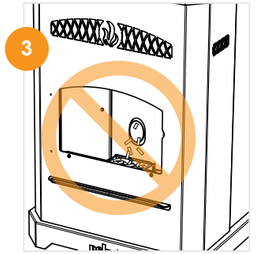

Auger stops feeding pellets.

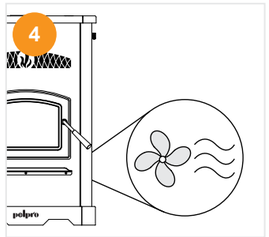

Blowers continue to run until after the exhaust temperature has cooled.

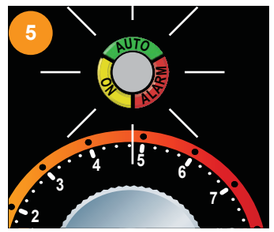

LED light will flash once per second.

CAUTION!
Smoke Hazard

- Turn dial control to OFF, let Stove completely cool and exhaust blower must be off. Now you can unplug Stove before servicing
- Smoke spillage into room can occur if Stove is not cool before unplugging

Maintaining Your Stove

Cleaning & Maintenance

Important:
Regular cleaning helps to assure optimal performance of your Stove. Please refer to page 29 to log your maintenance and cleaning.

Cleaning your Stove
Visit pelprostoves.com or scan this code:

Maintaining your Stove
Visit pelprostoves.com or scan this code:

What You'll Need



Cleaning tool



Phillips head screwdriver



Safety glasses



Gloves



Ceramic glass cleaner & non-abrasive cloth

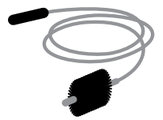

Flue cleaning brush



Metal container with lid



Drop cloth



Ash vacuum

Maintaining Your Stove



Where, When and How

Disposal of Ashes
Ashes should be placed in a metal container with a tight fitting lid. The closed container of ashes should be placed on a non-combustible floor or on the ground, well away from all combustible materials, pending final disposal. If the ashes are disposed of by burial in soil or otherwise locally dispersed, they should be retained in the closed container until all cinders have been thoroughly cooled.



⚠ WARNING!
Disconnect Stove from power supply before servicing

Zone 1 - Firebox

WEEKLY OR AS NEEDED

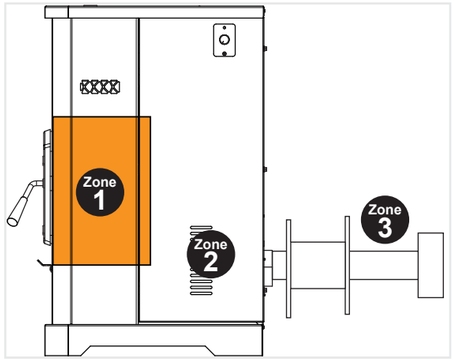

Fire pot
- Remove the fire pot
- Scrape clean and remove ashes
- Replace fire pot

Firebox
- Remove baffles and vacuum residual ash
- Remove ashes from firebox floor

⚠ WARNING!
If using a vacuum to clean Stove, be sure embers are thoroughly cooled to prevent a fire in the vacuum.

Glass
- Apply ceramic glass cleaner
- Use non-abrasive cloth to remove residue

Door Inspection
- The gasket between the glass and firebox should be inspected periodically to make sure there is a good seal.

Maintaining Your Stove



Pro Tip
The type of fuel you are burning will dictate how often you have to clean your fire pot.

If the fuel you are burning has a high dirt or ash content, it may be necessary to clean the fire pot more than once a day.

Poor quality fuel will cause clinkers to form in the fire pot. Clinkers are formed when dirt, ash or a non-burnable substance is heated to 2000 deg. F (1093 deg. C) and becomes glass-like.

Always burn dry fuel. Burning fuel with high moisture content take heat from the fuel and tends to cool the Stove, robbing heat from your home.

Damp pellet fuel can clog the feed system.



⚠ CAUTION!
Handle glass assembly with care and refer to maintenance instructions. **When cleaning glass:**
- Avoid striking, scratching or slamming glass.
- Do NOT clean glass when hot
- Do NOT use abrasive cleaners
- Do NOT operate with glass cracked, broken or scratched

Zone 2 - Stove Body

MONTHLY OR AS NEEDED

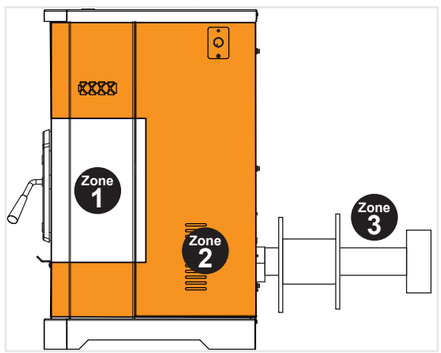

Convection Blower
- Remove right and left side panel to access and remove convection blower
- Vacuum any debris from the fan blades and blower housing

Hopper
- Empty hopper of any pellets
- Vacuum any remaining pellets/debris from the hopper

Maintaining Your Stove

Maintaining Your Stove

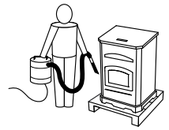

Electrical Components
- Identify and remove any debris
- Verify all connections are secure

ANNUALLY OR AS NEEDED

Exhaust Blower
- Remove left side panel to access and remove exhaust blower
- Vacuum any debris from the fan blades and blower housing

Zone 3 - Venting

ANNUALLY OR AS NEEDED

Termination Cap
- Remove termination cap
- Brush out to remove dust and hard buildup

Vent Components
- Soot, creosote, and fly ash will collect in the exhaust venting system and restrict the flow of the flue gases. This build up will occur more quickly in horizontal sections and elbows.
- Use the appropriate sized chimney brush to remove ash and buildup from the venting

Outside Air Kit
- Ensure there are no obstructions in the outside air kit cap

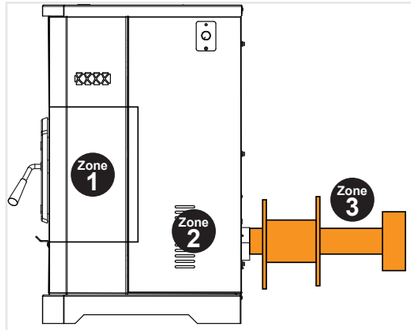

Having Trouble?
Visit the Troubleshooting section of this manual.

⚠ Caution!

When wood pellets are burned at a low temperature, they produces organic vapors which combine with moisture to form creosote vapors.

Creosote vapors condense in the relatively cool chimney flue of a newly-started or a low-temperature fire. As a result, creosote residue accumulates on the flue lining. When more heat is called for, this residue can be ignited, which creates an extremely hot fire in the chimney flue; this may damage the chimney or even destroy your home.

Your chimney should be inspected once every few months during the heating season to determine if a creosote or soot buildup has occurred. If creosote or soot has accumulated, it should be removed to reduce the risk of a chimney fire.

Replacement Parts



Replacement part for your Stove
Visit pelprostoves.com

Zone 1 - Front of Stove

Glass

1. Open the door from the appliance by lifting door off of hinge pins and lay on a flat surface face down.
2. Using a Phillips head screwdriver, remove the 3 brackets and set aside.
3. Remove old glass and gasket from door.
4. Replace gasket to door and add glass.
5. Re-install the brackets using the same screws.

Glass replacement kit: SRV7081-173
Door assembly replacement kit: SRV7086-021

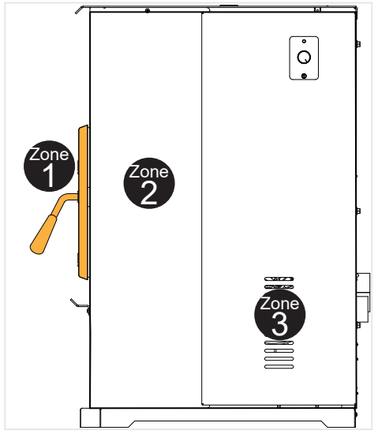

⚠ WARNING!
Glass is 5mm thick high temperature heat resistant ceramic glass.
- DO NOT REPLACE with any other material
- Alternate material may shatter and cause injury

Zone 2 - Firebox

Baffles

1. Turn the dial control to the off position. Make sure the unit is cool.
2. Remove the center baffle first by using the handle at the top of the baffle and pull up and then towards you. The hooks on the baffle will slide out of the slots in the bracket.
3. Remove the left baffle and then the right baffle by pulling up and then towards you. The left and right baffles have similar hooks and slots.

Replacement kit: SRV7077-006

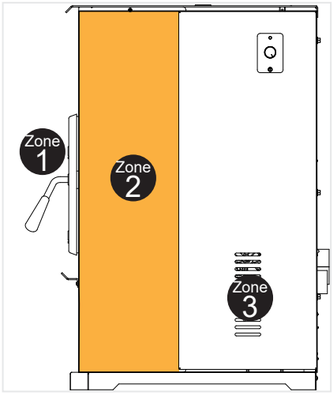

Zone 3 - Back of Stove

Convection Blower

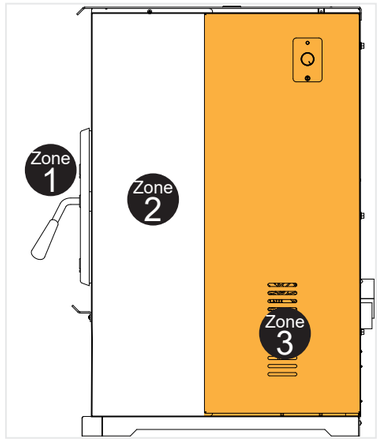

1. Turn the dial control to the off position. Unplug the power to the unit.
2. Remove the right side panel by loosening the three screws attaching it to the back of the appliance.
3. Using a 7/16 wrench or socket, remove the 2 nuts holding the blower to the convection plenum
4. Lower the back of the blower and lift out.
5. With the blower removed, unplug its wires from the wire harness.
6. Remove the screws holding the retainer plate to the convection blower housing.
7. To replace, put the bottom lip of the blower into the lower slot. Attach the top of the blower to nuts. Reattach the metal plate and screw nuts into bolts.
8. Attach wires to wire harness.
9. Attach the right side panel and tighten screws.

Replacement kit: KS-5020-1052

Exhaust Blower

1. Turn the dial control to the off position. Unplug the power to the unit.
2. Remove the left side panel by loosening the three screws attaching it to the back of the appliance.
3. Disconnect 2 white wires from the blue wires of the exhaust blower.
4. Remove the blower motor attached to a removable plate on the exhaust blower. Depending on the model, use a 1/4 inch socket, or 1/4 inch Nut Driver or #2 Phillips Head screw driver to loosen the 6 screws in the keyhole shaped holes and rotate the plate. It is only necessary to loosen screws.
5. Remove the exhaust blower and gasket.
6. Check for degradation on the gasket and replace if necessary using the gasket included in the kit.
7. Re-install in reverse order.

Replacement kit: 812-4400

Snap Disc

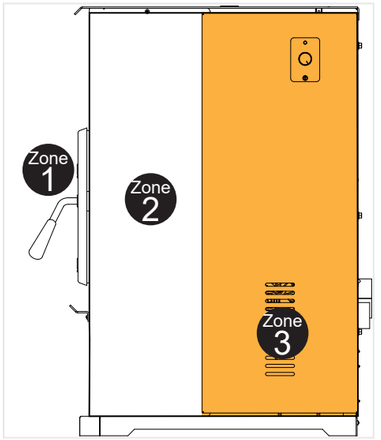

1. Turn the dial control to the off position. Unplug the power to the unit.
2. Using #2 Phillips screwdriver, loosen the bolts on the rear of the unit holding on the left side panel. You do not need to remove the screws. Remove side panel by lifting up and out.
3. Locate the snap disk on the top side of the feed tube where it meets the hopper. Disconnect the wire leads from the snap disk.
4. Using a #1 Phillips screwdriver, remove two 6-32 fasteners retaining the snap disk onto the side of the feed tube.
5. Using the same fasteners, attach the new snap disk. Attach the wire leads.
6. Restore power.

Replacement kit: SRV230-0080

Igniter

1. Turn the dial control to the off position. Unplug the power to the unit.
2. Remove the right side panel & unplug the wire leads to the igniter.
3. Remove the screw in the top of the igniter chamber. Pinch the ends of the bracket together and pull the igniter straight out of the igniter chamber.
4. If there is difficulty in removing the igniter from the chamber, the chamber can be removed from the rear of the firebox by removing the 1/4-20 bolt using 3/8” socket.
5. Re-install the new igniter into the chamber using the bracket. Reattach wires to terminals.
6. Inspect the igniter from the front of the unit by removing the firepot and looking into the end of the chamber. MAKE SURE THE IGNITER IS CENTERED IN THE CHAMBER.

Replacement kit: SRV7000-660

Replacement Parts

Control Board

1. Turn the dial control to the off position. Unplug the power to the unit.
2. Unplug the wires from the control board. The connectors are locking connectors. Pinch the release tab on each connector and gently tug and rock loose.
3. Pinch the 4 plastic pins from the rear of the unit with needle nose pliers to release the control board connectors.
4. Install new board following the steps in reverse.

Replacement kit: SRV7104-050

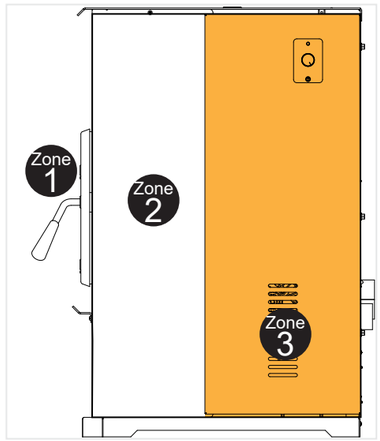

Feed Motor Assembly

1. Turn the dial control to the off position and unplug the appliance. Remove the right side panel and feed motor cover plate in the rear of the appliance.
2. Remove the 4 screws and cover plate.
3. Remove remaining pellets in feed assembly.
4. Unplug feed motor from wire harness.
5. Remove silicone from around busing end cap. Using Phillips head screwdriver remove 2 screws retaining the end cap to the feed tube.
6. From inside the hopper, lightly tap on the end cap alternating side to side to remove feed assembly from feed tube.
7. Re-install new feed assembly in reverse order; ensuring that the top of the feed bushing is in place and the busing end cap is symmetrical in the feed tube chamber prior to final tightening of the retaining screws. Silicone the end cap to the feed tube.
8. Plug the feed motor leads back in and restore power.

Replacement kit: SRV7077-014

Troubleshooting

Troubleshooting your Stove
Visit pelprostoves.com or scan the code:

Power Related

In the event of a power outage:

- If using a generator, PelPro recommends a steady state generator for best Stove performance.
- This Stove needs 110v to run properly. This Stove has not been tested for use with a third party battery backup.

Pro Tip
Check passages to assure they are clear of ash and obstructions. Poor airflow leads to poor performance of your Stove.

Stove plugged in but no response

- Unplug your Stove
- Check your home's circuit breaker
- Reset snap disc (located between drop tube and hopper (Zone 2)
- Visually inspect wires, blowers and power cord for breaks or wear to find cause of possible short circuit (Zone 2)

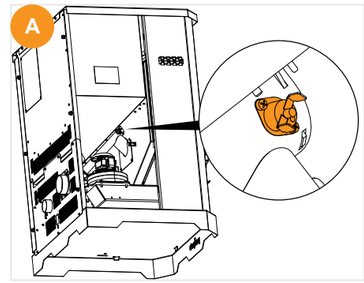

Component (i.e. blower) fails to start or fails to turn off

- Unplug your Stove
- Check all connections and power plugs are secure
- Visually inspect wires, blowers and power cord to find cause of possible short circuit

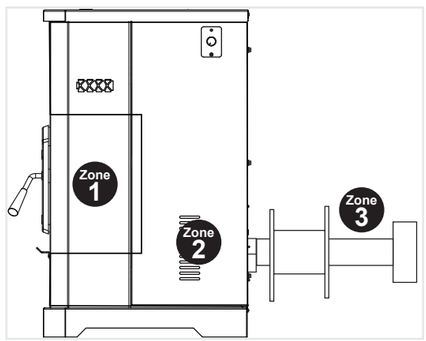

Troubleshooting

Blockage Related

Black soot on outside of house

- Confirm exhaust path is clean and clear (Zone 1 and 3)
  - Adjust air/fuel ratio using trim adjustment dial (See page 19 for trim adjustment instructions)
- Ensure termination cap has at least 18” clearance to reduce the effects of soot blow-back on home exterior (ie. siding)—if not able, refer to page 8 for alternate installation options

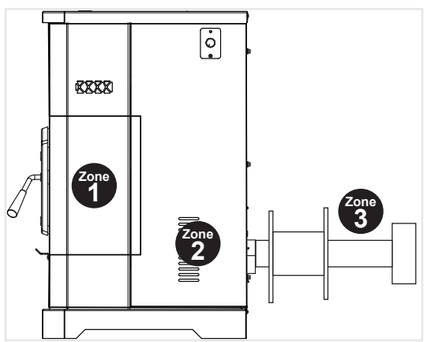

Rumbling/whistling noise during operation

- Confirm exhaust path is clean and clear (Zone 1 & 3)
  - Adjust air/fuel ratio using trim adjustment dial (See page 19 for trim adjustment instructions)

Stove will not light

- Confirm firebox is clean and clear (Zone 1)
  - Igniter is getting hot (glows orange)
- Inspect Stove body (Zone 2)
  - Confirm fuel is in hopper, close lid securely
  - Remove right side panel to access and confirm vacuum switch is clear and connected at both ends
  - Confirm all exhaust blower connections are secure
  - Confirm the feed assembly and motor are clean and clear of debris
- Confirm exhaust path is clean and clear (Zone 3)

Troubleshooting

Troubleshooting

Blockage Related

Fire starts but goes out

- Confirm firebox is clean and clear (Zone 1)
  - Ensure fire pot holes are clear
- Inspect Stove body (Zone 2)
  - Confirm exhaust probe is connected
  - Inspect and clean the exhaust outlet
- Confirm exhaust path is clean and clear (Zone 3)

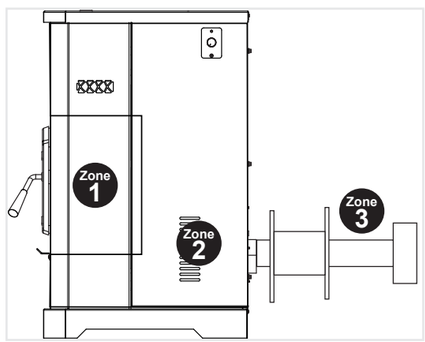

Starts and stops frequently in automatic mode

- Determine if your room is experiencing varying temperatures due to repeated opening/closing of doors or windows—correct if necessary
- Examine Stove body (Zone 2)
  - Inspect ambient probe and confirm that at least 2” is exposed outside of Stove body

Slow or smoky start-up and/or lazy flame

- Confirm exhaust path is clean and clear (Zone 3)
- Examine Stove body (Zone 2)
  - Align igniter so it is properly placed and centered
  - Review fuel quality (see Pellet Fuel information on page 14)

Troubleshooting



Symptom	Possible Cause	Corrective Action
Igniter does not turn off	Igniter short circuit. The fuse will be blown and upon replacement of the fuse, the igniter will remain on when Stove has power.	Inspect wires, blowers, and power cord to find cause of short circuit. Replace board and failed component.
Feed motor does not shut off	Feed motor short circuit. The fuse will be blown and upon replacement of the fuse, the feed motor will remain on when Stove has power.	Open hopper to stop the feed motor. Inspect wires feed motor, control board, and power cord to find source of short circuit. Replace control board and failed component.
Stove fails to shut off.	Stove running in maximum or minimum	Turn dial control to Off position. See Also, “Feed Motor Does Not Shut Off”. The Stove should go into a shutdown.
Large, lazy flame, orange color. Black ash on glass.	Dirty Stove. Poor fuel quality, high ash content. Incorrect air-fuel adjustment Excessive feeding/Feed Motor locked on	Clean Stove, including fire pot and venting system. Clean exhaust path. Try a different brand of pellets. Turn fuel adjustment trim dial to COUNTER-CLOCKWISE to increase combustion air speed; see trim pot adjustment section. Follow corrective action for feed motor does not turn off symptom.
Excessive fuel spilling over the fire pot into the ash wells and/or excessive flame	Excessive feeding/Feed Motor locked on	Follow corrective action for feed motor does not turn off.

Troubleshooting

Troubleshooting



Following correction of any alarm, turn the dial control to the OFF position, wait 10 seconds and turn back to desired setting OR unplug the Stove, wait 10 seconds then restore power.

Alarm (LED Flashing RED)	Possible Cause	Corrective Action
1 Flash: Empty Hopper	No fuel is delivered to the fire pot to sustain flame Hopper empty (most likely) Auger Jam (next likely) No vacuum Hopper lid open Flame is evident but the exhaust probe is not able to recognize the hot exhaust temperature Exhaust probe not attached to outlet Exhaust path is dirty	Fill the hopper, inspect the feed tube for jams, inspect the venting and firebox for obstructions and clean if necessary, inspect the exhaust blower to make sure it runs, or close the hopper lid. Inspect and clean the exhaust outlet, firebox, fire pot, and behind the baffles. Inspect the exhaust probe to see if it is securely attached to the side of the exhaust outlet.
2 Flashes: Exhaust Probe Fail *The exhaust probe senses a temperature of less than negative 20 degrees Celsius or above 300 degrees Celsius.*	The exhaust temperature is above or below the acceptable range. Exhaust Probe Failure Not plugged in Failed component	Plug the probe into the board Replace the component
3 Flashes: Ambient Probe Alarm *The ambient probe senses a temperature of less than negative 20 degrees Celsius or above 70 degrees Celsius.*	The ambient temperature is above or below the acceptable range. Ambient Probe Failure Not plugged in Failed component	Plug the probe into the board Replace the component
4 Flashes: Missed Ignition *During the ignition sequence the load does not ignite. The Stove will automatically retry once from the first failed attempt.*	Fuel No fuel Hopper Empty Feed Jam Feed doesn’t turn Feed motor disconnected or failed Fire pot Fire pot Dirty so fuel is not near ignition hole in the fire pot Igniter No power Debris in the end of the igniter chamber	Fill the hopper Inspect and clear jam in the feed tube Inspect the feed motor circuit (hopper lid must be closed, vacuum switch must be closed (ie exhaust blower on), and feed motor must be plugged in. Clean the fire pot Check leads and if the igniter works. Clean the end of the igniter chamber from inside the firebox (removal of the fire pot required for this step).
8 Flashes: Exhaust Over Temperature *The exhaust temperature has exceeded the allowable temperature.*	Fuel Feed Motor Locked On Non-approved fuel used Convection blower Dirty Failed Installation Installation configuration is tight allowing for limited air circulation around the Stove.	Review the feed motor and feed rates. Normal feed motor operation is on between 1* and 4* seconds out of every 7 seconds. (*depending on model and burn rate setting) If the feed motor does not turn off, replace the control board. Review the fuel being used. Clean Replace Review the installation and move if necessary.

Troubleshooting



Still having trouble?

Access additional resources at:
pelprostoves.com/troubleshooting

Warranty

If replacement parts are needed, please note warranty coverage begins on the date of purchase. Retain your original receipt as proof of purchase. The warranty period for covered components is as follows:

Components Covered	Warranty Period (Parts only, Labor not included)
Electrical	1 Year
Steel Parts (excluding fire pot)	5 Years
All replacement parts are covered for remainder of original warranty period or 90 days, whichever is longer	90 Days

Additional terms and limitations apply. See page 38 for complete warranty information.

Support

Please review the “Maintaining Your Stove” and “Troubleshooting” sections in this manual.

Visit pelprostoves.com to access:

- Order replacement parts
- Installation videos
- Troubleshooting videos
- Use and care videos
- Manuals and more

Listings and Certifications

Stove Certification

Series	PP150
Laboratory	UL LLC
Safety Report No.	MH60687
Type	Solid Fuel Room Stove/Pellet Fuel Burning Type
Standard	ASTM E1509-12 and ULC S627-00, Room Stove Pellet Fuel Burning type and (UM) 84-HUD, Mobile Home Approved.

Pellet Fuels Institute

c UL us LISTED

Note
This installation must conform with local codes.
In the absence of local codes you must comply with **ASTM E1509-12 and ULC S627-00 and (UM) 84-HUD**

⚠ WARNING!

- It is critical to have a working smoke detector installed in the home of Stove operation.
- Smoke alarms that are properly installed and maintained play a vital role in reducing fire deaths and injuries. Having a working smoke alarm reduces the chance of fire related injuries.
- Install at least one carbon monoxide detector on each floor of your home.

⚠ WARNING! Asphyxiation Risk.
DO NOT INSTALL IN A SLEEPING ROOM. Your Stove consumes oxygen in the room.

Note
This wood stove needs periodic inspection and repair for proper operation. It is against federal regulations to operate this wood heater in a manner inconsistent with operating instructions in this manual.

Mobile Home Approved

This Stove is approved for mobile home
Installations **when not installed in a sleeping room and when an outside combustion air inlet is provided**.

- The structural integrity of the mobile home floor, ceiling, and walls must be maintained
- The Stove must be properly grounded to the frame of the mobile home with #8 copper ground wire, and use only listed double-wall connector pipe
- Outside Air Kit provided with each Stove must be installed in a mobile home installation and must remain clear of leaves, debris, ice and/or snow. It must be unrestricted while the Stove is in use to prevent room air starvation which causes smoke spillage.
- The Stove must be secured to the mobile home structure by bolting it to the floor through holes provided at bottom of your cast legs on your Stove.

Listing and Code Approvals

Listings and Certifications

Glass Specifications

This Stove is equipped with 5mm ceramic glass.
Replace glass only with 5mm ceramic glass. Please contact PelPro for replacement glass.

Electrical Rating (On High)

PP150: 120 VAC, 60 Hz, Start 2.6 Amps,
Run 2.3 Amps

BTU & Efficiency Specifications

Emissions Report No.	0135PS041E
EPA Certificatin #	Number: 128-18
EPA Certified	0.53 grams per hour
***LHV Tested Efficiency**	87.5%
****HHV Tested Efficiency**	81.9%
*****BTU Output**	9,605 to 40,667 / hr.
******BTU Input**	11,676 to 49,207 / hr.
*******Heating Capacity**	1,225 to 2,500 sq. ft. depending on climate zone
Vent Size	3” or 4” L or PL
Hopper Capacity	150 lbs (Approximate)
Fuel	Premium Wood pellets
Shipping Weight	275 lbs

EM O-TL C US

The PP150 is Certified to comply with 2020 particulate emission standards.

EPA CERTIFIED 2020

*Weighted average LHV efficiency using data collected during EPA emissions test.
**Weighted average HHV efficiency using data collected during EPA emissions test.
***Maximum BTU output based on HHV efficiency and the high burn section of the EPA emissions test.
****Maximum BTU input based on the high burn section of the EPA emissions test.
*****Heating capacity depencs on climate zone, structure layout, insulation, windows, etc.

Stove Dimensions

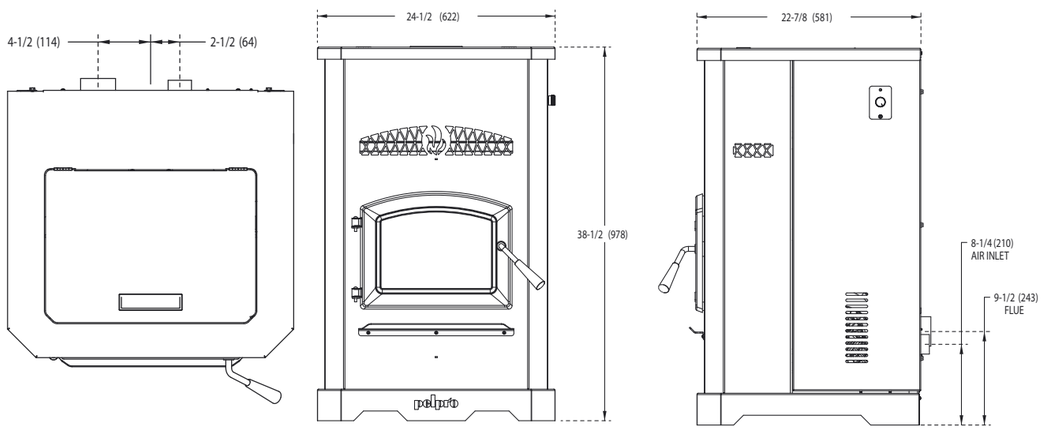

Listings and Certifications

Hearth & Home Technologies, Inc. - PelPro Limited Warranty

Hearth & Home Technologies, Inc. (HHT), on behalf of its PelPro brand, extends the following warranty for PelPro Stoves purchased from an authorized retailer.

If you experience issues with your PelPro Stove, Consumer Care is available to assist you with troubleshooting technical issues.

This warranty covers components of the PelPro Stoves as listed in the table below.

Warranty Coverage:

Subject to the table below, HHT warrants to the owner of the PelPro Stove that the Stove will be free from defects in materials and workmanship at the time of manufacture. After installation, if covered components are found to be defective in materials or workmanship during the applicable warranty period, HHT will replace the covered components.

HHT, at its own discretion, may fully discharge all of its obligations under such warranties by replacing the product itself or refunding the verified purchase price of the product itself. The maximum amount recoverable under this warranty is limited to the purchase price of the product. This warranty is subject to conditions, exclusions, and limitations as described below.

Warranty Period:

Warranty coverage begins on the date of original purchase. The warranty period for covered components is as follows:

Components Covered	Warranty Period (Parts only, Labor not included)
Electrical	1 Year
Steel Parts (excluding fire pot)	5 Years
All replacement parts are covered for remainder of original warranty period or 90 days, whichever is longer	90 Days

Parts Service & Returns:

HHT is proud to offer the best technical and sales support in the industry. If you have any questions about how to operate your Stove or if you need service parts, please visit PelProstoves.com.

Warranty Exclusions:

Warranty does not cover damage or breakage due to misuse, improper handling or modifications. There is no warranty on the paint, glass, fire pot, fire brick, or any gaskets, or against damage caused from corrosion. There is no expressed or implied performance warranty on PelPro units as HHT has no control over the installation, operation, cleaning, maintenance, or type of fuel burned.

Some states do not allow exclusion or limitation of incidental or consequential damages, or limitations of implied warranties, so the limitations or exclusions set forth in this limited warranty may not apply to you. This limited warranty gives you specific legal rights and you may have other rights, which vary from state to state. Warranty is void if the PelPro Stove has not been installed, operated, cleaned and maintained in strict accordance with HHT's instructions.

NEITHER HHT NOR THE RETAILER FROM WHO YOU PURCHASED YOUR PELPRO UNIT SHALL BE RESPONSIBLE, LEGALLY OR OTHERWISE, FOR THE INCIDENTAL OR CONSEQUENTIAL DAMAGE TO PROPERTY OR PERSONS RESULTING FROM THE USE OF THIS PRODUCT. ANY WARRANTY IMPLIED BY LAW, INCLUDING BUT NOT LIMITED TO IMPLIED WARRANTIES OF THE MERCHANTABILITY OR FITNESS, SHALL BE LIMITED TO ONE (1) YEAR ON THE BREACH OF THIS WARRANTY OR ANY TYPE OF WARRANTY EXPRESSED OR IMPLIED BY LAW. HHT SHALL IN NO EVENT BE LIABLE FOR ANY SPECIAL, INDIRECT, CONSEQUENTIAL OR OTHER DAMAGES OF ANY NATURE WHATSOEVER IN EXCESS OF THE ORIGINAL PURCHASE PRICE OF THIS PRODUCT. ALL WARRANTIES BY HHT ARE SET FORTH HEREIN AND NO CLAIM SHALL BE MADE AGAINST HHT ON ANY ORAL WARRANTY OR REPRESENTATION.

Reference Materials

Service Parts **PP150**

Pellet Stove

Beginning Manufacturing Date: Aug 2021
Ending Manufacturing Date: Active

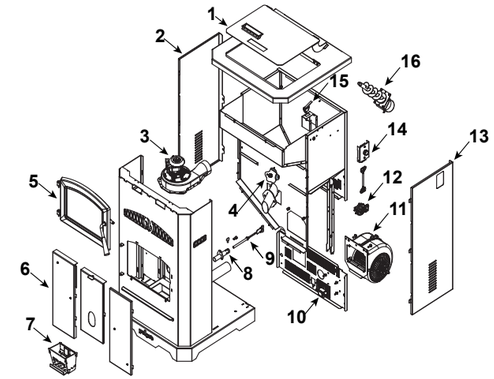

IMPORTANT: THIS IS DATED INFORMATION. When requesting service or replacement parts for your appliance please provide model number and serial number. All parts listed in this manual must be ordered from a dealer.

ITEM	DESCRIPTION	COMMENTS	PART NUMBER	Stocked at Depot
1	Hopper Lid Assembly		SRV7086-019	
	Hopper Extension		PPHE200	
	Handle, Hopper Lid		SRV200-0110	
2	Side Curtain, Left Hand		SRV8104-154	Y
3	Exhaust Combustion Blower		812-4400	Y
	Gasket, Between Blower Housing and Stove		SRV240-0812	Y
	Gasket, Between Blower Housing and Motor		812-4710	Y
4	Snap disc, Manual Reset		SRV230-0080	Y
5	Door Assembly		SRV7086-021	Y
6	Baffle Kit		SRV7077-006	
7	Firepot		SRV7077-003	Y
8	Igniter Chamber Kit		SRV7077-110	
9	Igniter Kit		SRV7000-660	Y
10	Control Board		SRV7104-050	Y
11	Convection Blower		KS-5020-1052	Y
	Convection Blower Gasket		SRV7081-195	
	Convection Blower Bracket		SRV7081-210	
12	Vacuum Switch		SRV7000-531	Y
	Vacuum Hose, 5/32 ID	3 Ft	SRV240-0450	Y
	Hose, Barb Assembly		SRV229-0920	
13	Side Curtain, Right Hand		SRV8104-153	Y
14	Dial Control		SRV7083-036	Y
	Wire Harness, Dial Control		SRV7000-667	Y
15	Hopper Switch		SRV7000-612	Y

See Following page for additional servcie parts 6/21

Service Parts **PP150**

Beginning Manufacturing Date: Aug 2021
Ending Manufacturing Date: Active

#5 Door Assembly

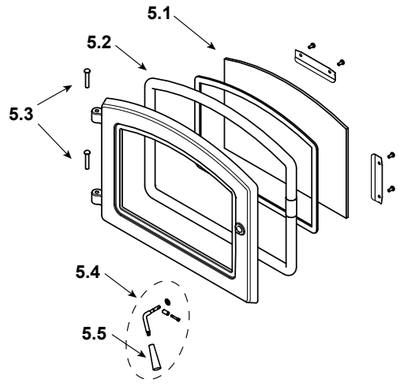

IMPORTANT: THIS IS DATED INFORMATION. When requesting service or replacement parts for your appliance please provide model number and serial number. All parts listed in this manual must be ordered from a dealer.

ITEM	DESCRIPTION	COMMENTS	PART NUMBER	Stocked at Depot
5	Door Assembly		SRV7086-021	Y
5.1	Glass Assembly		SRV7081-173	
5.2	Rope, Door, 3/4” x 84”		832-1680	
5.3	Hinge Pins	Pkg of 2	433-1590/2	
5.4	Threaded Handle Assembly Kit		SRV7093-024D	Y
5.5	Handle Black Phenolic Kit		KS-5140-1442	Y

#16 Feed Assembly Kit

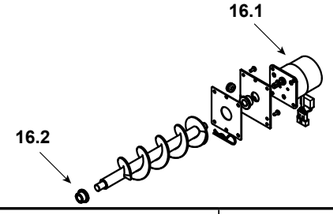

16	Feed Assembly Kit		SRV7077-014	Y
16.1	Feed Motor		SRV7000-670	Y
16.2	Feed Shaft Bushing	Pkg of 2	7000-600/2	Y
	Power Cord		812-1180	Y
	Ambient Probe		SRV7000-668	Y
	Component Pack		SRV8104-028	
	Exhaust Probe		SRV7000-669	Y
	Wire Harness		SRV7093-184	Y
	Wire Clip	Pkg of 10	7000-400/10	Y

Reference Materials

We recommend that you record the following information for your heating stove:

Date Purchased / installed: _____
(Attach Proof of Purchase)

Serial Number: _____ Location on Stove: _____

Store Purchased From: _____

Store Location: _____

Maintenance Log:

Reference Materials

Maintenance Log:

Reference Materials

Maintenance Log:


pelpro
PELLET APPLIANCES

Model: PP 130-B
Hearth & Home Technologies
352 Mountain House Road
Halifax, PA 17032

Owner's Manual

Outfitter-II

Owner's Manual

Operation & Care

INSTALLER: Leave this manual with party responsible for use and operation.
OWNER: Retain this manual for future reference.

Contact your dealer with questions on installation, operation, or service.

QUADRA-FIRE®

PELLET BURNING APPLIANCE

MODEL NUMBER:
OUTFITTER-II

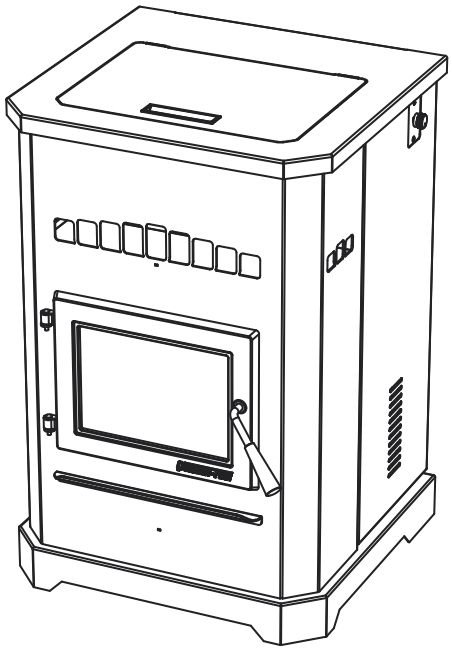

Pellet Fuels Institute

Intertek

⚠ CAUTION

Tested and approved for wood pellets, Burning of any other type of fuel voids your warranty.

Installation and service of this appliance should be performed by qualified personnel. Hearth & Home Technologies recommends HHT Factory Trained or NFI certified professionals.

hearthED FACTORY TRAINING Fuel Your Fire

NFI NATIONAL FIREPLACE INSTITUTE® A CERTIFICATION AGENCY

⚠ WARNING



If the information in these instructions is not followed exactly, a fire could result causing property damage, personal injury, or death.

- Do not store or use gasoline or other flammable vapors and liquids in the vicinity of this or any other appliance.
- Do not over fire - If appliance or chimney connector glows, you are over firing. Over firing will void your warranty.
- Comply with all minimum clearances to combustibles as specified.

Failure to comply may cause house fire.

⚠ WARNING



HOT SURFACES!
Glass and other surfaces are hot during operation AND cool down.

Hot glass will cause burns.

- Do not touch glass until it is cooled
- NEVER allow children to touch glass
- Keep children away
- CAREFULLY SUPERVISE children in same room as fireplace.
- Alert children and adults to hazards of high temperatures
- **High temperatures may ignite clothing or other flammable materials.**
- Keep clothing, furniture, draperies and other flammable materials away.

⚠ CAUTION

Check building codes prior to installation.

- Installation MUST comply with local, regional, state and national codes and regulations.
- Consult local building, fire officials or authorities having jurisdiction about restrictions, installation inspection, and permits.

NOTE: To obtain a French translation of this manual, please contact your dealer or visit www.quadrafire.com.

REMARQUE : Pour obtenir une traduction française de ce manuel, s'il vous plaît contacter votre revendeur ou visitez www.quadrafire.com.

Congratulations

and Welcome to the Quadra-Fire Family!

NOTE: Clearances may only be reduced by means approved by the regulatory authority having jurisdiction

A. Sample of Serial Number / Safety Label

LOCATION: Back of appliance

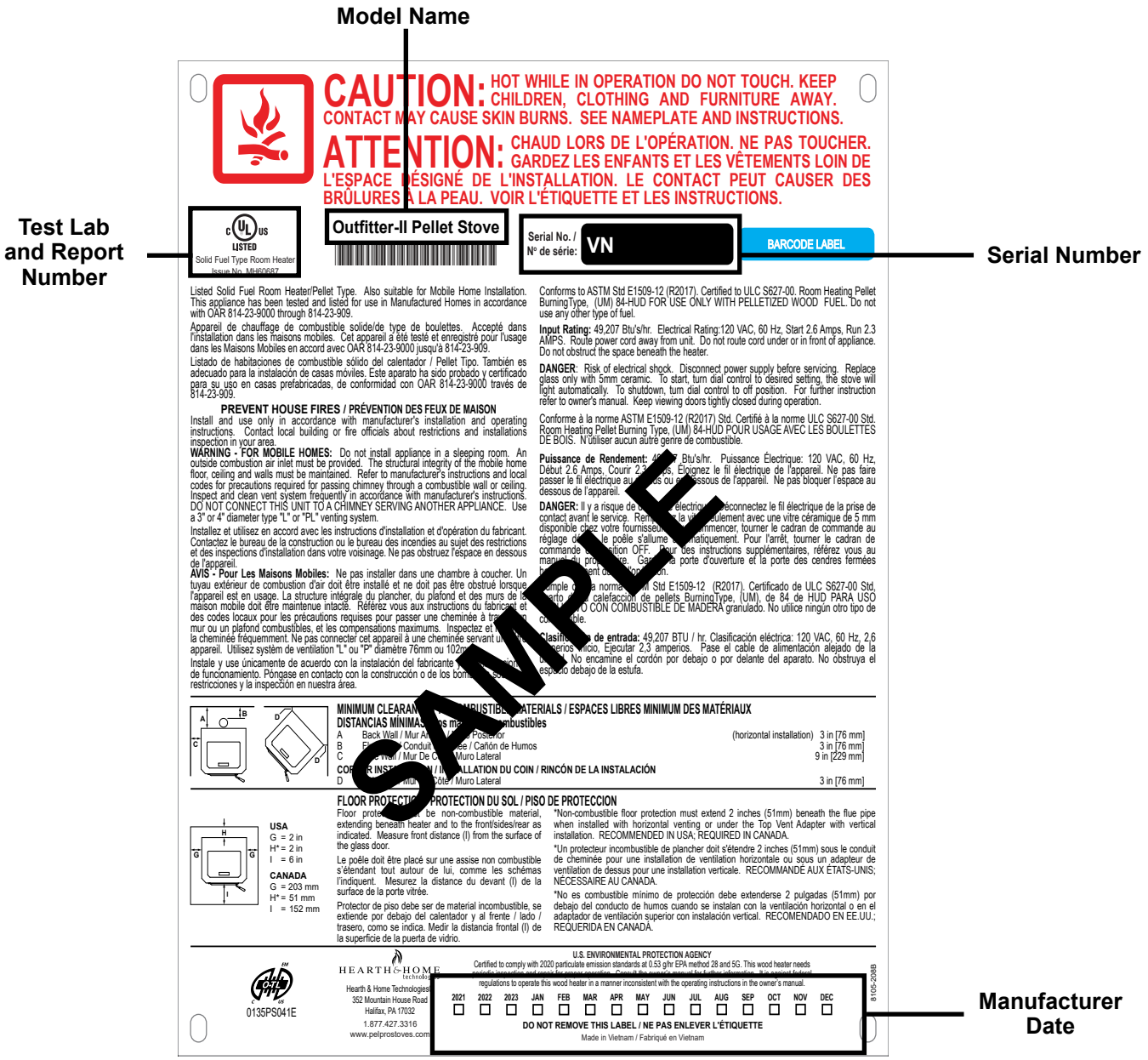

Safety Alert Key:

- **DANGER!** Indicates a hazardous situation which, if not avoided will result in death or serious injury.
- **WARNING!** Indicates a hazardous situation which, if not avoided could result in death or serious injury.
- **CAUTION!** Indicates a hazardous situation which, if not avoided, could result in minor or moderate injury.
- **NOTICE:** Indicates practices which may cause damage to the appliance or to property.

TABLE OF CONTENTS

A. Sample of Serial Number / Safety Label 2
B. Warranty Policy 4
C. Quick Start Guide. 6

1 Listing and Code Approvals

A. Appliance Safety Certification 7
B. Appliance Emissions Certification 7
C. BTU & Efficiency Specifications. 7
D. Glass Specifications. 8
E. Electrical Rating (on high) 8
F. Mobile Home Approved 8
G. Sleeping Room 8
H. California - Prop65. 8

2 General Information

A. Fire Safety 9
B. Combustible/Non-Combustible Materials. 9
C. Fuel Material and Fuel Storage 9

3 General Operating Information

A. General Operating Parts 10
B. Priming the Feed Tube. 11
C. Firepot Burn Down. 11
D. Shutdown. 11
E. Starting Your First Fire 11
F. Fire Characteristics. 12
G. Ignition Cycles 12
H. Trim Adjustment. 12
I. Clear Space. 12
J. Thermostat Controls 13
K. Thermostat Setup Options 13
L. Thermostat Operation Instructions 14
M. Thermostat Temperature Programs. 14
N. Thermostat Other Features 15
O. Thermostat Battery Replacement 16
P. LED Color Coding Chart and Explanation 17

4 Maintaining & Servicing Your Appliance

A. Proper Shutdown Procedure 18
B. Quick Reference Maintenance Chart. 18
C. General Maintenance. 19
D. High Ash Fuel Content Maintenance 22
E. Frequently Asked Questions 23
F. Glass Replacement 23

6 Reference Materials

A. Maintenance and Service Log 25
B. Service Parts List. 26

➔ = Contains updated information

Quadra-Fire is a registered trademark of Hearth & Home Technologies.

B. Warranty Policy

Hearth & Home Technologies

LIMITED LIFETIME WARRANTY

Hearth & Home Technologies, on behalf of its hearth brands ("HHT"), extends the following warranty for HHT gas, wood, pellet and electric hearth appliances that are purchased from an HHT authorized dealer.

WARRANTY COVERAGE:

HHT warrants to the original owner of the HHT appliance at the site of installation, and to any transferee taking ownership of the appliance at the site of installation within two years following the date of original purchase, that the HHT appliance will be free from defects in materials and workmanship at the time of manufacture. After installation, if covered components manufactured by HHT are found to be defective in materials or workmanship during the applicable warranty period, HHT will, at its option, repair or replace the covered components. HHT, at its own discretion, may fully discharge all of its obligations under such warranties by replacing the product itself or refunding the verified purchase price of the product itself. The maximum amount recoverable under this warranty is limited to the purchase price of the product. This warranty is subject to conditions, exclusions and limitations as described below.

WARRANTY PERIOD:

Warranty coverage for consumers begins at the date of installation. In the case of new home construction, warranty coverage begins on the date of first occupancy of the dwelling or six months after the sale of the product by an independent, authorized HHT dealer/distributor, whichever occurs earlier. However, the warranty shall commence no later than 24 months following the date of product shipment from HHT, regardless of the installation or occupancy date. The warranty period for parts and labor for covered components is produced in the following table.

The term "Limited Lifetime" in the table below is defined as: 20 years from the beginning date of warranty coverage for gas appliances, and 10 years from the beginning date of warranty coverage for wood and pellet appliances. These time periods reflect the minimum expected useful lives of the designated components under normal operating conditions.

Warranty Period		HHT Manufactured Appliances and Venting					
Parts	Labor	Gas	Pellet	Wood	Electric	Venting	Components Covered
1 Year		X	X	X	X	X	All parts including handles, external enamaled components and other material except as covered by Conditions, Exclusions, and Limitations listed
2 years			X	X			Igniters, Auger Motors, Electronic Components, and Glass
		X					Electrical components limited to modules, remotes/wall switches, valves, pilots, blowers, junction boxes, wire harnesses, transformers and lights (excluding light bulbs)
		X		X			Molded Refractory Panels, Glass Liners
3 years			X				Firepots, burnpots, mechanical feeders/auger assemblies
5 years	1 year	X					Vent Free Burners, Vent Free Logs
			X	X			Castings, Medallions and Baffles
6 years	3 years			X			Catalyst - Limitations Listed
7 years	3 years		X	X			Manifold tubes, HHT Chimney and Terminations
10 years	1 year	X					Burners, logs and refractory
Limited Lifetime	3 years	X	X	X			Firebox and heat exchanger, FlexBurn® System (engine, inner cover,access cover and fireback)
1 Year	None	X	X	X	X	X	All replacement parts beyond warranty period

See conditions, exclusions and limitations on the next page

WARRANTY CONDITIONS:

- This warranty only covers HHT appliances that are purchased through an HHT authorized dealer or distributor. A list of HHT authorized dealers is available on the HHT branded websites.
- This warranty is only valid while the HHT appliance remains at the site of original installation.
- This warranty is only valid in the country in which the HHT authorized dealer or distributor that sold the appliance resides.
- Contact your installing dealer for warranty service. If the installing dealer or distributor is unable to provide necessary parts, contact the nearest HHT authorized dealer or supplier. Additional service fees may apply if you are seeking warranty service from a dealer other than the dealer from whom you originally purchased the product.
- Check with your dealer in advance for any costs to you when arranging a warranty call. Travel and shipping charges for parts are not covered by this warranty.
- Limited Catalyst Warranty
    - For wood burning products containing a catalyst, the catalyst will be warranted for a six-year period to the original purchaser at the site of original installation. The purchaser must provide the name, address, and telephone number of the location where the product is installed, proof of original purchase date, date of failure, and any relevant information regarding the failure of the catalyst.

WARRANTY EXCLUSIONS:

This warranty does not cover the following:

- Changes in surface finishes as a result of normal use. As a heating appliance, some changes in color of interior and exterior surface finishes may occur. This is not a flaw and is not covered under warranty.
- Damage to printed, plated, or enameled surfaces caused by fingerprints, accidents, misuse, scratches, melted items, or other external sources and residues left on the plated surfaces from the use of abrasive cleaners or polishes.
- Repair or replacement of parts that are subject to normal wear and tear during the warranty period are not covered. These parts include: paint, wood and pellet gaskets, firebricks, grates, flame guides, batteries and the discoloration of glass.
- Expansion, contraction, or movement of certain parts causing noise. These conditions are normal and complaints related to this noise are not covered by this warranty.
- Damages resulting from: (1) failure to install, operate, or maintain the appliance in accordance with the installation instructions, operating instructions, and listing agent identification label furnished with the appliance; (2) failure to install the appliance in accordance with local building codes; (3) shipping or improper handling; (4) improper operation, abuse, misuse, continued operation with damaged, corroded or failed components, accident, or improperly/incorrectly performed repairs (5) environmental conditions, inadequate ventilation, negative pressure, or drafting caused by tightly sealed constructions, insufficient make-up air supply, or handling devices such as exhaust fans or forced air furnaces or other such causes; (6) use of fuels other than those specified in the operation instructions; (7) installation or use of components not supplied with the appliance or any other components not expressly authorized and approved by HHT; (8) modification of the appliance not expressly authorized and approved by HHT in writing; and/or (9) interruptions or fluctuations of electrical power supply to the appliance.
- Non-HHT venting components, hearth connections or other accessories used in conjunction with the appliance.
- Any part of a pre-existing fireplace system in which an insert or a decorative gas appliance is installed.
- HHT's obligation under this warranty does not extend to the appliance's capability to heat the desired space. Information is provided to assist the consumer and the dealer in selecting the proper appliance for the application. Consideration must be given to the appliance location and configuration, environmental conditions, insulation and air tightness of the structure.

This warranty is void if:

- The appliance has been over-fired, operated in atmospheres contaminated by chlorine, fluorine, or other damaging chemicals. Over-firing can be identified by, but not limited to, warped plates or tubes, deformation/warping of interior cast iron structure or components, rust colored cast iron, bubbling, cracking and discoloration of steel or enamel finishes.
- The appliance is subjected to prolonged periods of dampness or condensation.
- There is any damage to the appliance or other components due to water or weather damage which is the result of, but not limited to, improper chimney or venting installation.

LIMITATIONS OF LIABILITY

- The owner's exclusive remedy and HHT's sole obligation under this warranty, under any other warranty, express or implied, or in contract, tort or otherwise, shall be limited to replacement, repair, or refund, as specified above. In no event will HHT be liable for any incidental or consequential damages caused by defects in the appliance. Some states do not allow exclusions or limitation of incidental or consequential damages, so these limitations may not apply to you. This warranty gives you specific rights; you may also have other rights, which vary from state to state. EXCEPT TO THE EXTENT PROVIDED BY LAW, HHT MAKES NO EXPRESS WARRANTIES OTHER THAN THE WARRANTY SPECIFICED HEREIN. THE DURATION OF ANY IMPLIED WARRANTY IS LIMITED TO DURATION OF THE EXPRESSED WARRANTY SPECIFIED ABOVE.

QUICK START GUIDE

Before you plug in this appliance, follow these instructions

Set Up

1. Empty fire box of component packet and any other debris.

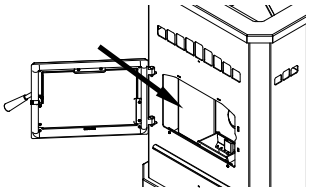

2. Add pellets and close lid.

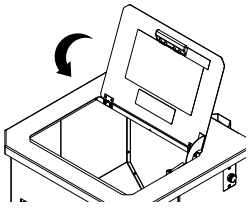

3. Turn DIAL to OFF
4. Plug in the appliance
   - Exhaust blower will run for about 45 Seconds (wait for it to stop before priming)
   - Green light will start fl ashing
5. Ensure thermostat is connected properly per included instructions.

Prime

1. After the exhaust blower has stopped; quickly turn the dial from OFF to HI two times:



- The LIGHT will turn solid green and pellets will feed. Wait for 2 minutes
- If the LIGHT did not turn solid green:
- Turn dial back to OFF
- Unplug appliance, plug it back in and repeat

Priming is only needed for first fire or starting fire on empty hopper.
NOTE: The prime function is only required during initial set up of the unit, or after the unit has alarmed out due to an empty hopper. Priming while under normal operating conditions will cause the fire pot to overfill.

Run

1. While thermostat is in RUN mode, the set temperature can be temporarily changed by pressing UP.
2. Choose Setting:

*The temporarily changed set temperature will return to the programmed value stored in memory when start time of the next upcoming scheduled event is reached (MORN, DAY, EVE, OR NITE).

**Appliance will not turn on unless target temperature is a higher temperature than the room temperature.

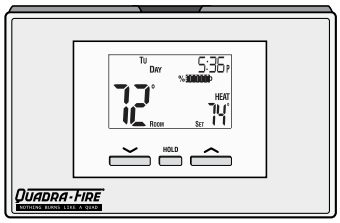

- LO – HI*
- Green LIGHT will begin flashing and stove will start

It may take as long as 10 minutes to achieve a fire in the fire pot. Turning the knob or thermostat to off during this time will interrupt the startup process.

*For first fire, HHT recommends running on HI for first 30 minutes

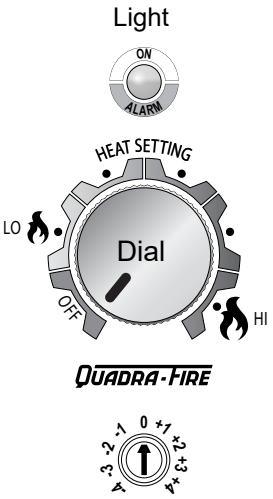

Trim
Control Panel

1 Important Safety Information

A. Appliance Certification

Model	OUTFITTER-II
Laboratory	UL LLC
Report No.	MH60687
Type	Solid Fuel Room Appliance/Pellet Fuel Burning Type
Standard	ASTM E1509-12 and ULC S627-00 Room Appliance Pellet Fuel Burning type and (UM) 84-HUD, Mobile Home Approved.

B. Appliance Emissions Certification

Model	OUTFITTER-II
Laboratory	OMNI Test Laboratories, Inc.
Report No.	0135PS041E
Standard	Method 28R, ASTM E1509-04 and ASTM E2779
Can be found at: www.quadrafire.com/about-us/epa-certification	

The OUTFITTER-II is Certified to comply with 2020 particulate emission standards.



This pellet appliance needs periodic inspection and repair for proper operation. Consult the owner's manual for further information. It is against federal regulations to operate this pellet appliance in a manner inconsistent with operating instructions in this manual.

NOTICE: This installation must conform with local codes. In the absence of local codes you must comply with the **ASTM E1509-04, ULC S627-00 and (UM) 84-HUD**.

C. BTU & Efficiency Specifications

EPA Certification Number:	128-18
EPA Certified Emissions:	0.53 grams per hour
***LHV Tested Efficiency:**	87.5%
****HHV Tested Efficiency:**	81.9%
*****EPA BTU Output:**	9,605 to 40,667 per hr
******BTU Input:**	11,676 to 49,207 per hr
Vent Size:	3" or 4" Type "L" or "PL"
Hopper Capacity:	130 lbs.
Fuel	Premium Wood Pellets
* Weighted average LHV (Low Heating Value) efficiency using data collected during EPA emissions tests in accordance with the requirements of CSA B415.1.	
** Weighted average HHV (High Heating Value) efficiency using data collected during EPA emissions tests in accordance with the requirements of CSA B415.1.	
*** A range of BTU outputs calculated using HHV efficiency and the burn rates from the EPA tests.	
**** Based on the maximum feed rate per hour multiplied by approximately 8600 BTU's which is the average BTU's from a pound of pellets.	

D. Glass Specifications

This appliance is equipped with 5mm ceramic glass. Replace glass only with 5mm ceramic glass. Please contact your dealer for replacement glass.

E. Electrical Rating (on high)

120 VAC, 60 Hz, Start 2.6 Amps, Run 2.3 Amps

F. Mobile Home Approved

- This appliance is approved for mobile home installations when not installed in a sleeping room and when an outside combustion air inlet is provided.
- The structural integrity of the mobile home floor, ceiling, and walls must be maintained.
- The appliance must be properly grounded to the frame of the mobile home with #8 copper ground wire, and use only listed double-wall connector pipe.
- Outside Air Kit, part 811-0872 or OAK-3 must be installed in a mobile home installation.
- Appliance must be secured to mobile home structure.

G. Sleeping Room

When installed in a sleeping room it is recommended that 3ft of vertical be installed prior to horizontally exiting the room and a smoke/CO alarm be installed in the bedroom; The size of the room must be at least 50ft³ per 1,000 Btu/hr stove input, if the stove exceeds the room size, outside air must be installed.

H. California - Prop65

WARNING

This product and the fuels used to operate this product (wood), and the products of combustion of such fuels, can expose you to chemicals including carbon black, which is known to the State of California to cause cancer, and carbon monoxide, which is known to the State of California to cause birth defects or other reproductive harm. For more information go to: WWW.P65Warnings.ca.gov

WARNING



Fire Risk

Hearth & Home Technologies disclaims any responsibility for, and the warranty will be voided by, the following actions:

- Installation and use of any damaged appliance.
- Modification of the appliance.
- Installation other than as instructed by Hearth & Home Technologies.
- Installation and/or use of any component part not approved by Hearth & Home Technologies.
- Operating appliance without fully assembling all components.
- Operating appliance without legs attached (if supplied with appliance).
- Do NOT Over fire - If appliance or chimney connector glows, you are over firing.

Any such action that may cause a fire hazard.

Improper installation, adjustment, alteration, service or maintenance can cause injury or property damage.

For assistance or additional information, consult a qualified installer, service agency or your dealer.

NOTE: Hearth & Home Technologies, manufacturer of this appliance, reserves the right to alter its products, their specifications and/or price without notice.

Hearth & Home Technologies WILL NOT warranty appliances that exhibit evidence of over-firing. Evidence of over-firing includes, but is not limited to:

- Warped air tube
- Deteriorated refractory brick retainers
- Deteriorated baffle and other interior components

2 General Information

A. Fire Safety

To provide reasonable fire safety, the following should be given serious consideration:

- Install at least one smoke detector on each floor of your home.
- Install at least one carbon monoxide detector on each floor of your home.
- Locate smoke detector away from the heating appliance and close to the sleeping areas.
- Follow the smoke detector manufacturer's placement and installation instructions and maintain regularly.
- Follow the carbon monoxide manufacturer's placement and installation instructions and maintain regularly.
- Conveniently locate a Class A fire extinguisher to contend with small fires.
- In the event of a hopper fire:
  - Evacuate the house immediately.
  - Notify fire department.

B. Combustible/Non-Combustible Materials

- **Combustible Material**
  - Material made of or surfaced with wood, compressed paper, plant fibers, plastics, or any material capable of igniting and burning, whether flame-proofed or not, plastered or non plastered.
- **Non-combustible Material**
  - Material which will not ignite and burn. Such materials are those consisting entirely of steel, iron, brick, tile, slate, glass or plasters, or any combination thereof.
- **Non-combustible Sealant Material**
  - Sealants which will not ignite and burn: Rutland, Inc. Fireplace Mortar #63, Rutland 76R, Nuflex 304, GE RTV106 or GE RTB116 (or equivalent).

C. Fuel Material and Fuel Storage

Pellet fuel quality can greatly fluctuate. We recommend that you buy fuel in multi-ton lots whenever possible. However, we do recommend trying various brands before purchasing multi-ton lots to ensure your satisfaction.

Fuel Material

- Made from sawdust or wood by-products
- Depending on the source material it may have a high or low ash content.

Higher Ash Content Material

- Hardwoods with a high mineral content
- Fuel that contains bark
- Standard grade pellets or high ash pellets

Lower Ash Content Material

- Most softwoods
- Fuels with low mineral content
- Most premium grade pellets

Clinkers

Minerals and other non-combustible materials such as sand will turn into a hard, glass-like substance called a clinker when heated in the firepot.

Trees from different areas will vary in mineral content. That is why some fuels produce more clinkers than others.

Moisture

Always burn dry fuel. Burning fuel with high moisture content takes heat from the fuel and tends to cool the appliance, robbing heat from your home. Damp pellet fuel can clog the feed system.

Size

- Pellets are either 1/4 inch or 5/16 inch (6-8mm) in diameter
- Length should be no more that 1-1/2 inches (38mm)
- Pellet lengths can vary from lot to lot from the same manufacturer
- Due to length variations, the feed rate may need adjusting occasionally

Performance

- Higher ash content requires the firepot and the ash drawer to be emptied more frequently
- Hardwoods require more air to burn properly
- Premium wood pellets produce the highest heat output
- Burning pellets longer than 1-1/2 inches (38mm) can cause an inconsistent fuel feed rate and/or missed ignitions of feed jams.

Storage

- Wood pellets should be left in their original sealed bag until using to prevent moisture absorption
- Do not store any pellet fuel within the clearance requirements or in an area that would hinder routine cleaning and maintenance.

D. Before Your First Fire

1. First, make sure your appliance has been properly installed and that all safety requirements have been met. Pay particular attention to the fire protection and venting.
2. Double check that the firebox is empty and the firepot is in place!
3. Close and latch the door.

3 General Operating Information

WARNING



HOT SURFACES!
Glass and other surfaces are hot during operation AND cool down.
Hot glass will cause burns.

- Do not touch glass until it is cooled
- NEVER allow children to touch glass
- Keep children away
- CAREFULLY SUPERVISE children in same room as appliance.
- Alert children and adults to hazards of high temperatures.
- **High temperatures may ignite clothing or other flammable materials.**
- Keep clothing, furniture, draperies and other flammable materials away.

NOTICE: If you expect that children may come into contact with this appliance, we recommend a barrier such as a decorative screen (See your retailer for suggestions).

A. General Operating Parts

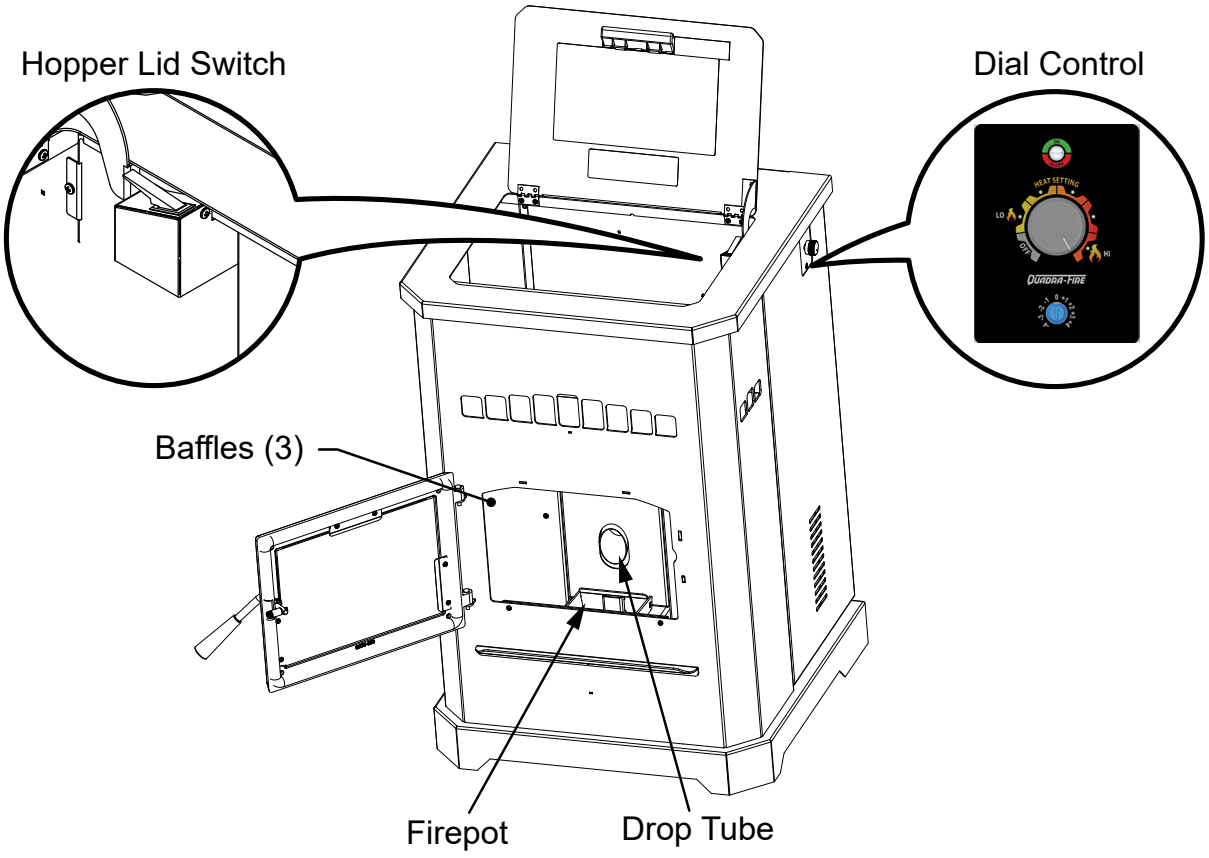

B. Priming the Feed Tube

STOP!

Please Read Prior to Attempting Prime Function

When attempting Prime function it is NECESSARY to operate the dial control QUICKLY in a single fluid motion. If this is not performed properly, the appliance will not prime.

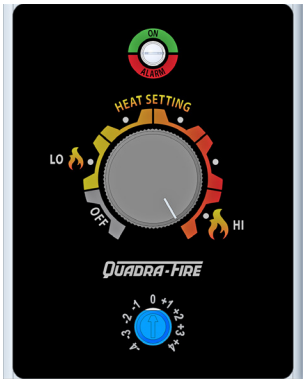

WARNING

A FIREPOT THAT IS MORE THAN HALF FULL IS OVERFILLED AND CAN BE DANGEROUS. DO NOT OVERFILL FIREPOT FOR IGNITION.
Overfilling the firepot could cause an unsafe ignition resulting in injury or damage. Firepot must be emptied.



The feed tube may need to be primed only if the hopper is being filled for the first time or if the appliance has run out of pellets. To prime the appliance, turn the dial control QUICKLY from the OFF position to the HI position, to OFF to HI in one fluid motion. The LED light will be a solid green color to indicate a successful prime function. When the feed motor is running continuously, the LED light will be a solid green color. When pellets start to drop into the firepot, the feed tube is primed. Turn the dial control to the desired position and the appliance will begin its ignition sequence with a blinking green light. Allow the appliance up to 20 minutes for ignition to occur.

CAUTION

Do not restart or manually add pellets or any type of fuel to the burn pot during this process.

If the appliance does not ignite, the LED light will blink red four times showing a missed ignition alarm. Turn the appliance to off and remove and EMPTY the firepot.

Return the firepot to the appliance in the correct orientation. See figure in Cleaning Fire pot in the General Maintenance section of Owner's Manual under Maintaining and Servicing the Appliance.

Attempt relighting sequence (see Lighting Instructions Guide).

C. Firepot Burn Down

A feature of these pellet appliances is the firepot burn down cycle. The frequency of the cycle is once every hour the appliance is burning. During this event, the feed is reduced to the lowest setting and the exhaust blower ramps up to the highest setting. The purpose of the burn down cycle is to help remove debris from the firepot and help the appliance burn as efficient as possible. The cycle lasts 99 seconds. Please be aware that the burn down does not replace daily cleaning activities but makes them easier.

D. Shutdown

To shut the appliance down, turn the dial control counter clockwise to the OFF position. During the shutdown process, the LED will flash amber or green rapidly just like the ignition sequence. The firepot burn down cycle will begin but without the feed motor running. The feed will be terminated during this shutdown process. The exhaust and convection blowers will remain on during the shutdown process until the exhaust has cooled.

If maintenance or daily cleaning is going to be conducted immediately following a shutdown, please use caution as components especially those inside the firebox may still be hot.

Please note that if the dial control is turned to the off position and back on even if by mistake, the appliance will go through the shutdown sequence.

E. Starting Your First Fire

1. Turn the dial control to "OFF".
2. Make sure the firepot is clean, in place, and free of debris.
3. Plug the appliance into the wall and fill the hopper with wood pellets. Shut the hopper lid.
4. Turn the dial control to the desired burn setting.

The appliance will go into the ignition sequence followed by start up (The green LED will flash rapidly). The ignition sequence involves the exhaust blower turning on, the igniter turning on, and the feed motor running in two stages. The first stage involves the feed motor running continuously for about a minute to preload pellets into the firepot. Following the preload and a delay, the feed motor will begin cycling on and off. When the pellets are warming up and on the verge of igniting, it is not uncommon for the firebox to fill with smoke. Once ignition actually happens, the smoke should evacuate quickly. During this stage as well as any part during the burn process, the front door should not be opened. This cycle continues until the appliance senses ignition by a rise in the exhaust temperature or the appliance times out. Following the ignition cycle the appliance begins to feed additional pellets gradually for a few minutes to build up the fire. This is important to have a controlled start up to keep the appliance in balance.

F. Fire Characteristics

The overall height of the flame will vary throughout the burn for a couple of reasons. First is that the flame will vary based on type of fuel or even batch of fuel. Secondly, the appliance adjusts the burn rate according to the how far away the room temperature is from the set temperature. This should not cause alarm. The third characteristic that affects the fire relates to general maintenance and cleaning. Infrequent or poor general maintenance will result is poorer performance. Indicators of the need for additional maintenance activities include a lazy flame, black sooted glass, pellets not igniting, or pellets falling to the side of the firepot. See the maintenance section for additional information.

⚠ CAUTION

Odors, vapors, and smoke released during initial operation.

- Curing of high temperature paint.
- Open windows for air circulation.

Odors may be irritating to sensitive individuals.

G. Ignition Cycles

1. At the beginning of each ignition cycle, it is normal to see some smoke in the firebox. The smoke will stop once the fire starts.
2. The convection blower will automatically turn on after your appliance has been burning for approximately 10 minutes.
3. This blower transfers heat from your appliance into the room, and will continue to run even after the unit has shutdown. It will turn off after the exhaust temperature has cooled.
4. Occasionally the appliance may run out of fuel and shut itself down. When this happens the empty hopper alarm will be triggered.

H. Trim Adjustment

Trim adjustment is the small dial located below the main dial control. The function of the trim adjustment is to allow for variations in elevation, venting and installation configurations, and fuel types (hard wood/soft wood).

Rotating this dial will adjust the air/fuel ratio to the appliance:

- Clockwise adjustments increase the flame height.
- Counter-clockwise adjustments will decrease the flame height.
- When changing trim settings only adjust 1 level at a time, allowing 15 minutes for fire to stabilize before making another adjustment.
- The factory default trim adjustments are set to zero (0) for most fuels and recommended venting configurations.

A properly adjusted fire will have a bright, active flame pattern that extends out of the fire pot approximately 6 to 9 inches when burning on high. A properly adjusted fire will burn cleaner and have higher efficiencies.

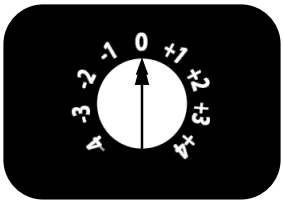

Figure 12.1

I. Clear Space

⚠ WARNING

RISK OF FIRE!
Do NOT place combustible objects in front or to the sides of the appliance. High temperatures may ignite clothing, furniture or draperies.

Mantel: Avoid placing candles and other heat-sensitive objects on mantel or hearth. Heat may damage these objects.

NOTICE: Clearances may only be reduced by means approved by the regulatory authority having jurisdiction.

⚠ WARNING

RISK OF FIRE!
Keep combustible materials, gasoline and other flammable vapors and liquids clear of appliance.

- Do NOT store flammable materials in the appliance's vicinity.
- Do NOT use gasoline, lantern fuel, kerosene, charcoal lighter fluid or similar liquids to start or "freshen up" a fire in this heater.

Keep all such liquids well away from the heater while it is in use as combustible materials may ignite.

J. Thermostat Controls

TEMPERATURE (HEAT / OFF) SWITCH:

Set this switch to HEAT to control your appliance. The off position will disable the appliance.

SET (MULTI- FUNCTION) SLIDE SWITCH:

This provides easy access to common settings, and should always remain in RUN unless items are being adjusted.

NOTE: When thermostat is set to “Manual” non-programmable mode, all positions of the SET slide switch will act like RUN.

UP / DOWN BUTTONS:

The UP and DOWN buttons are used to control the set temperature, or adjust any other on-screen items. An items flashing, is the item currently being adjusted.

HOLD BUTTON:

This button activates and deactivates the manual Temperature HOLD feature, which maintains a fixed set temperature indefinitely without following a program routine.

COPY BUTTON:

This is used to copy temperature program items from one day to the next. Also used to access the menu setup.

NEXT BUTTON:

This is used when setting items such as software options, and temperature programs when they are flashing on the screen. Pressing the NEXT button will cycle through which item is flashing.

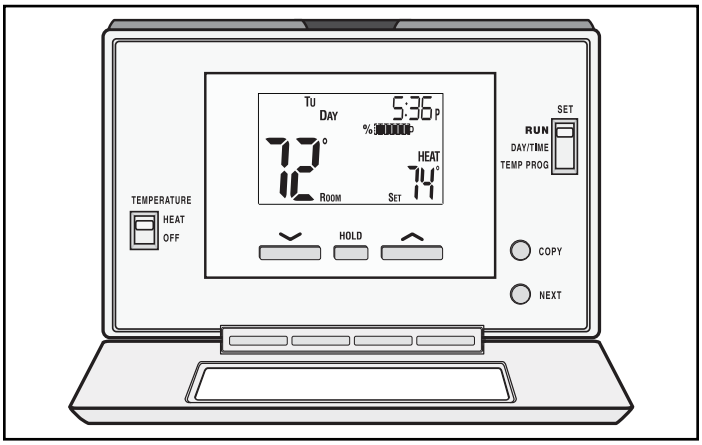

Figure 13.1

K. Thermostat Setup Options

Setup options for how the thermostat will function are performed using a menu on the display screen.

TO ACCESS THE SETUP MENU:

Move the TEMPERATURE switch into the OFF position, and then hold down the COPY button for approximately 5 seconds until the screen changes. The menu will always start with item #01, and is advanced to each following item by a single press of the NEXT button. The options for each item are changed using the UP or DOWN buttons.

ITEM #01 (CLK = CLOCK FORMAT):

- 12Hr, default: This displays the clock times using standard AM and PM values.
- 24Hr: This displays the clock times using the military-time format (example 22:00 hours, without using AM or PM).

ITEM #02 (TMP = TEMPERATURE SCALE):

- F, default: Shows all temperature values in Fahrenheit.
- C: Shows all temperature values Celsius.

ITEM #03 (PROGRAMMING STYLE):

- 7 Day, default: This style uses a separate program routine for each of the 7 days in the week.
- 5/2 Day: This style uses a weekday program routine for Monday, Tuesday, Wednesday, Thursday, Friday, and a separate weekend program routine for Saturday and Sunday.
- Manual Non-Programmable: In this setting, there are no program routines for the thermostat to follow and the temperature control will be set only by the UP and DOWN buttons on the front panel.

ITEM #04 (PERD = EVENT OR PERIOD QUANTITY):

- 4P, default: Thermostat uses four Events per day (called MORN, DAY, EVE, and NITE).
- 2P: The thermostat uses two Events per day (called DAY and NITE).

NOTE: Event or Period Quantity feature is not accessible during Manual Non-Programmable mode.

ITEM #07 (DLAY = DELAY TIME):

- 5, default: Thermostat waits 5 minutes before turning the system back on after it was last run. This internal delay prevents the appliance from turning on too quickly after shutting down. The 5 minute setting is fine for most applications.
- 2: Same operation as above but reduced to 2 minutes between state changes.

NOTE: There is no delay available when the thermostat is manually turned up and down.

ITEM #08 (TEMPERATURE DIFFERENTIAL):

- The thermostat works by turning your heating system on and off whenever the room temperature varies from the desired set-point temperature.
- Use the UP/DOWN buttons to change the number value between 1 and 9. Generally your system should cycle on about 3 to 6 times per hour. A smaller differential number makes the system cycle more frequently, so the room temperature is more precise and constant. A larger differential number will make the system remain on for a longer duration each time and decreases the number of cycles per hour.
- Default is set to 4.

L. Thermostat Operation Instructions

SET DAY AND TIME:

Place the SET switch into the DAY/TIME position. With the day flashing press UP or DOWN to set the day or the week. Press NEXT and the clock time will start flashing. Use UP or DOWN to set the time; verify the AM/PM indicator is correct. Return the SET switch to RUN position when finished.

HEATING:

Basic operation of the thermostat can be obtained with the SET switch in the RUN position. The temperature can be adjusted using the UP and DOWN buttons. When the thermostat is first powered on, it will follow a default temperature routine that is preset from the factory **(Figure 15.1)**.

LCD DISPLAY BACK LIGHT:

Event	Time	Temperature
MORN	6:00 AM	70°F (21°C)
DAY	8:00 AM	62°F (17°C)
EVE	6:00 PM	70°F (21°C)
NITE	10:00 PM	62°F (17°C)

Figure 15.1

The display screen is lighted to assist viewing at nighttime, or in locations with low light levels. Press any button on the front panel to activate the approximate 10 second back light.

TEMPERATURE OVERRIDE:

While thermostat is in RUN mode, the set temperature can be temporarily changed by pressing UP or DOWN. The temporarily changed set temperature will return to the programmed value stored in memory when start time of the next upcoming scheduled event is reached (MORN, DAY, EVE, OR NITE). While the temporary changed set temperature is in effect, the word OVERRIDE will be shown on the display screen. To cancel, move TEMPERATURE switch to OFF and back to HEAT again.

TEMPERATURE HOLD:

Temperature hold is used for maintaining a fixed set temperature; once a HOLD is initiated, the thermostat will maintain the set temperature indefinitely. To enter a HOLD state, press the HOLD button one time and the word HOLD will appear on the display. To cancel, press the HOLD button once again.

STATIC NOTICE

Thermostat is protected against normal static electric discharges, however to minimize the risk of damaging the thermostat in extremely dry weather, please touch a grounded metal object before touching the thermostat.

M. Thermostat Temperature Programs

The thermostat by default has 4 separate program events they are: MORN, DAY, EVE, and NITE. Each event ends at the start time of the following event.

NOTE: If the thermostat is set for 2 events a day instead of 4, the thermostat will only use the DAY and NITE events.

SET TEMPERATURE PROGRAMS:

1. Move TEMPERATURE switch to HEAT.
2. Move SET switch to TEMP PROG position.
3. Starting with Monday, use the UP or DOWN buttons to adjust the start time and set temperature for the MORN event, and then press NEXT button to advance.
4. Adjust the start time and set temperature of the DAY event then press NEXT button.
5. Continue in this same manner to adjust the start time and set temperatures for the EVE and NITE events for Monday.

NOTE: When the last event is finished for each day or group of days, the thermostat will advance forward into the next day or group of days.

6. Use steps 3 through 5 to set up the events for the rest of the week or group of days.
7. Return the SET switch back to RUN.

COPY PROGRAM FEATURE:

Using similar instructions as **SET TEMPERATURE PROGRAMS** the **COPY** button will allow a whole day of set program events to be copied to another day.

1. Move TEMPERATURE switch to HEAT as well as move SET switch to TEMP PROG position.
2. Starting with Monday, use the UP or DOWN buttons to adjust the start time and set temperature for the MORN, DAY, EVE, and NITE events. Press the COPY button and then press the NEXT button to advance to Tuesday.
3. With Tuesday displayed press COPY button. As all programs events from Monday will be copied to Tuesday (this will advance automatically to the next day; Wednesday, as the word COPY will appear on the screen for one second).
4. Continue in this pressing COPY button to set desired days with original setting.

NOTE: The word COPY will not appear on the display for Monday, but will display each day afterwards for approximately one second and the day of the week will automatically advance forward to the next day.

N. Thermostat Other Features

NOTE: All other features need to be completed in a timely manner as the thermostat will time out after 10 seconds.

TEMPERATURE CALIBRATION:

The internal temperature sensor in this thermostat is accurately calibrated at the factory, and in most cases alterations to this setting should not be needed. The temperature calibration feature allows you to manually offset the measured temperature by as much as plus or minus 5°F (3°C) from its original value. If several thermostats are used in the same house, this feature can be used to synchronize this thermostat to the others.

Change the temperature calibration:

1. Move TEMPERATURE switch to OFF.
2. Move SET switch to RUN.
3. Press and hold both UP and DOWN buttons together for at least 5 seconds; the words SET and CAL will appear on the display along with a single flashing temperature digit.
4. Use the UP or DOWN buttons to change the number of degrees desired for adjustment; 0° is the default value and also means no correction will be applied.
5. Press the NEXT button to accept the setting.

KEYPAD LOCKOUT:

There is the option to lock the front panel buttons to prevent unauthorized tampering of your thermostat settings.

To Lock the Keypad:

1. Move TEMPERATURE switch to HEAT.
2. Move SET switch to RUN.
3. Perform a single press of each button in the following sequence:
   - NEXT, NEXT, NEXT, HOLD

A padlock will appear on the display screen.

To Unlock the Keypad:

1. Move TEMPERATURE switch to HEAT.
2. Move SET switch to RUN.
3. Perform a single press of each button in the following sequence:
   - NEXT, NEXT, NEXT, HOLD

A padlock will no longer be present on the display screen.

HARDWARE RESET:

The hardware reset button; labeled HW RST, is a small round push button that is located in the middle of the circuit board, just below the battery holder **(Figure 15.1)**. Pressing this button will:

- Cause the LCD display screen to become fully populated
- Thermostat to perform an internal system check of its components

If the thermostat appears to be acting in an erratic manner, pressing the HW RST button may remedy this behavior. The temperature programs are not erased when a hardware reset is performed, however the clock will have to be changed to match the current day and time.

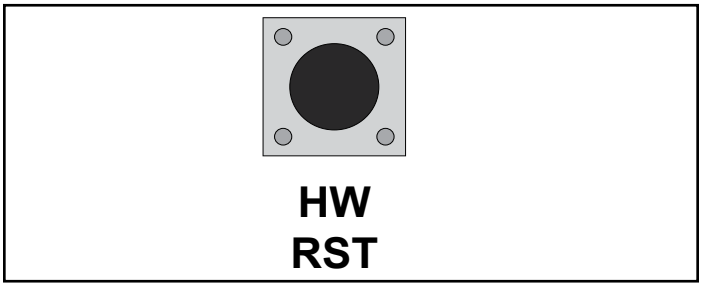

Figure 15.1

SOFTWARE RESET:

Software reset is used to erase ALL temperature events, and to return all user-adjustable software settings back to their original factory default settings.

To Perform a Software Reset:

1. Verify the thermostat's keypad is not locked.
2. Move TEMPERATURE switch to OFF.
3. Press and hold the UP, DOWN, and NEXT buttons all at the same time for at least 5 seconds. When the LCD display screen will become fully populated let go of all buttons at that point the screen will return to normal.

The clock will have to be changed to match the current day and time.

O. Thermostat Battery Replacement

This thermostat is powered by two "AA" Alkaline batteries. The batteries should be replaced AT LEAST once per year to ensure reliable operation or sooner if the LO BATT appears on the display screen. The batteries are located on the back of the thermostat's circuit board. The front portion of the thermostat can be removed from the back half by using the tabs on the top edge of the thermostat housing (**Figure 16.1**).

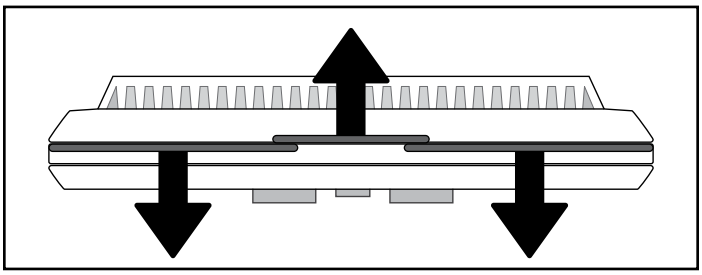

Figure 16.1

When installing new batteries, it is recommended using only brand new "AA" size alkaline batteries. Please verify the polarity markings shown in the battery compartment before adding batteries to the compartment. When finished, line up the front of the thermostat to the base, and firmly press together to securely latch the front and back halves together properly.

BATTERY GRAPHIC:

Anytime time the batteries are physically present in the thermostat, there will be a visual indicator showing the life of the battery. This will appear on the display screen (**Figures 16.2 & 16.3**).



Figure 16.2 - Full battery icon



Figure 16.3 - Low battery icon

CONNECT THERMOSTAT WIRES TO APPLIANCE:

There is a 4 screw terminal block located on the back lower left corner of the stove directly above the power cord inlet. The center 2 screws are for the thermostat wires **(Figure 16.4)**.

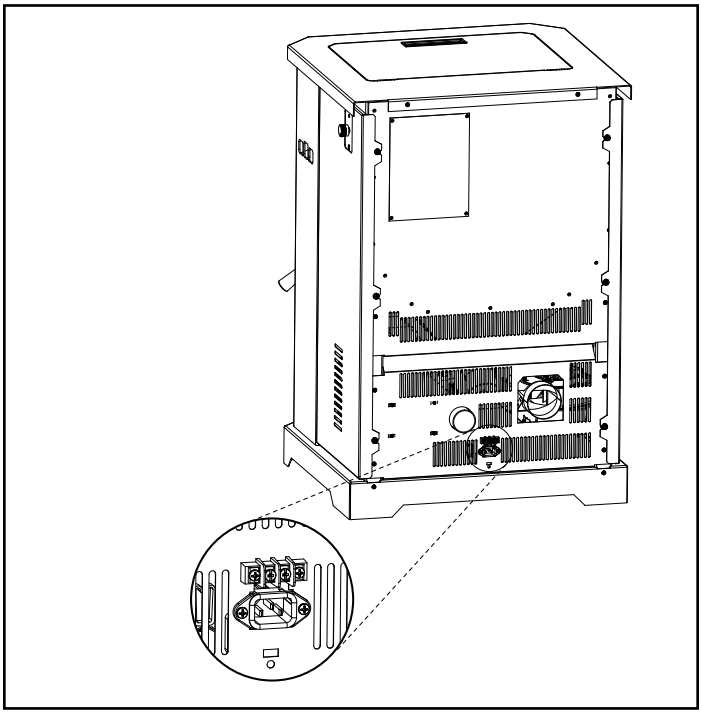

Figure 16.4

CAUTION



Shock hazard.

- Do NOT remove grounding prong from plug.
- Plug directly into properly grounded 3 prong receptacle.
- Route cord away from appliance.
- Do NOT route cord under or in front of appliance.

P. LED Color Coding Chart and Explanation

LED Color	Number of Flashes between pauses	Description	Notes
Green	Steady ON while priming feed tube (max time 2 minutes)	Feed Motor is running continuously. (This primes the feed tube).	When priming the feed system and filling the firepot, **DO NOT OVERFILL FIREPOT FOR IGNITION.** The unit will automatically go into start up following the prime function.
Green	Steady ON while burning	Room temperature is close to set point and burning on lowest burnt rate.	
Green	1x	Unit is off and ready.	To start appliance, follow start up sequence.
Green	Blinks Continuously	Appliance is in the start up/ignition sequence or in shutdown.	During shut down, the blowers will shut off when the exhaust temperature has cooled.
Green	Varies	When in the automatic mode, the number of flashes between pauses indicates the burn rate (1 for low up to 5 for high).	Adjust the dial control to change the desired room temperature.
Amber	Steady ON	Appliance is set and running at either the minimum or maximum power levels.	The unit will shut off only when the hopper runs out of fuel, the user changes the dial control to a different state, or the unit senses an error.
Amber	Blinks Continuously	Appliance is in the in shutdown sequence.	During shut down, the blowers will shut off when the exhaust temperature has cooled.
Red	1x	Empty Hopper Alarm	This alarm is caused by the fire going out from lack of fuel. See troubleshooting section for more information.
Red	2x	Exhaust Probe Alarm	Failed component error. See troubleshooting section for more information.
Red	3x	Ambient Probe Alarm	Failed component error. See troubleshooting section for more information.
Red	4x	Missed Ignition	There are a total of 2 tries per ignition sequence. If after 2 tries there is no rise in exhaust temperature this error will occur. See the troubleshooting section for additional information and correction.
Red	8x	Exhaust Gas Over Temperature Alarm	The exhaust temperature exceed the allowable limit. See the troubleshooting section for more information and correction.

⚠ WARNING



Fire Risk

Do NOT operate appliance:

- With appliance door open.
- Firepot floor open.

Do NOT store fuel:

- Closer than required clearances to combustibles to appliance
- Within space required for loading or ash removal.

4 Maintaining & Servicing Your Appliance

When properly maintained, your appliance will give you many years of trouble-free service. Contact your GHP dealer to answer questions regarding proper operation, troubleshooting and service for your appliance.

A. Proper Shutdown Procedure

Turn dial control to off, let appliance completely cool and exhaust blower must be off. After cooling unplug appliance before servicing.

⚠ CAUTION



Shock and Smoke Hazard

- Smoke spillage into room can occur if appliance is not cool before unplugging.
- Risk of shock if appliance not unplugged before servicing appliance.

Follow the detailed instructions found in this section for each step listed as referenced in the chart below.

B. Quick Reference Maintenance Chart

Cleaning or Inspection	Frequency		Daily	Weekly	Monthly	Yearly
Firepot	Every 3 bags of fuel	OR	X			
Ash Removal from Firebox	Every 5 bags of fuel or more frequently depending on ash build-up	OR		X		
Glass	When clear view of firepot becomes obscure	OR		X		
Hopper	Every 25 bags of fuel	OR			X	
Exhaust Path, Drop Tube and Behind Baffles	Every 25 bags or more frequently depending on ash build-up	OR			X	
Door Handle & Gasket Inspection	Prior to heating season	OR			X	
Blower, Convection	Every 25 bags or more frequently depending on operating environment.	OR			X	
Blower, Exhaust	More frequently depending on the fuel type	OR				X
Firebox - Prepare for Non-Burn Season	At end of heating season	OR				X
Venting System	Every 3 tons or more frequently depending on the fuel type	OR				X

NOTICE: *These are recommendations. Clean more frequently if you encounter heavy build-up of ash at the recommended interval or you see soot coming from the vent.* **Not properly cleaning your appliance on a regular basis will void your warranty.**

C. General Maintenance

1. Types of Fuel

The type of fuel you are burning will dictate how often you have to clean your firepot.

If the fuel you are burning has a high dirt or ash content, it may be necessary to clean the firepot more than once a day.

Poor quality fuel will cause clinkers to form in the firepot. A clinker is formed when dirt, ash or a non-burnable substance is heated to 2000°F (1093°C) and becomes glass-like. See section D following for more details on fuels with high ash content.

2. Cleaning Firepot with the Firepot Clean-Out Tool

- **Frequency:** Daily or more often as needed
- **By:** Homeowner

a. The appliance must be in complete shutdown and cool and the exhaust blower off. If you are just cleaning the firepot, there is no need to unplug the appliance.

b. Open the front door of the appliance and lift out the firepot. Use the firepot cleaning tool to break up deposits inside the firepot and dispose in an approved container. Depending on the quality of fuel used, the front of the firepot may need to be removed for better access for cleaning.

c. Use the narrow end of the firepot cleaning tool to clean the holes.

d. With the firepot out clean the area below the firepot.

e. Reassemble the firepot and place back inside the firepot riser. Make sure the firepot is in the correct direction with the slanted lip in the rear. Failure to install the firepot correctly may result in missed ignitions.

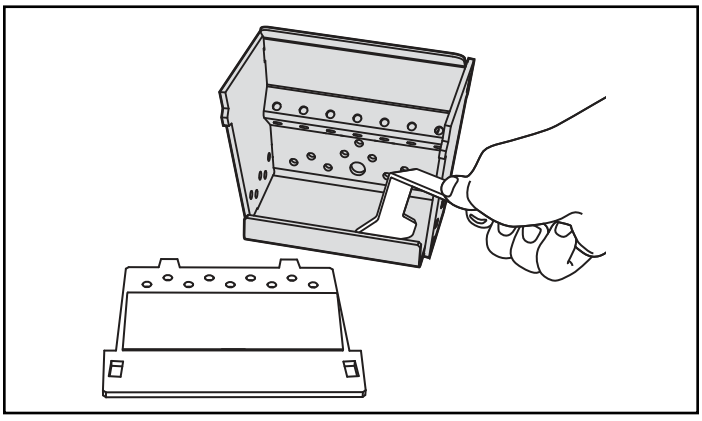

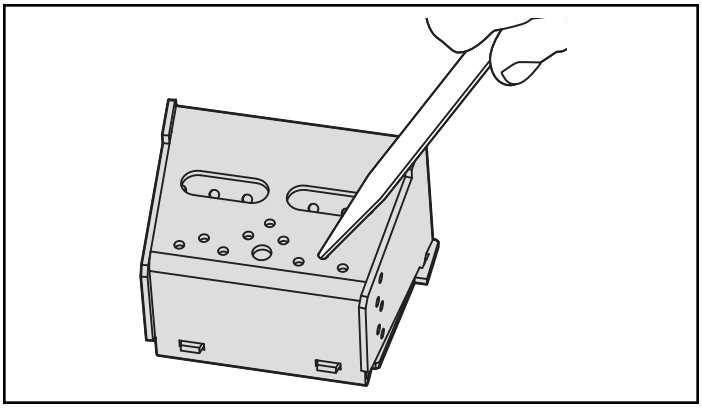

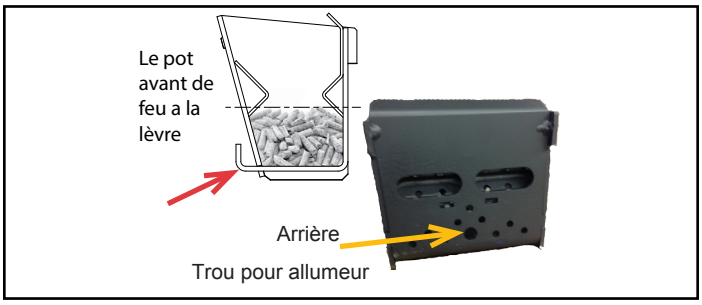

3. Ash Removal from Firebox

- **Frequency:** Weekly or more frequently depending on ash build-up.
- **By:** Homeowner

a. There must not be any hot ashes in the firebox during cleaning so allow the appliance to completely cool. The firebox ash should be removed every time the exhaust path is cleaned. Frequent cleaning of the ash in the firebox will help slow down the build-up of ash in the exhaust blower and vent system.

b. Vacuum out the firebox thoroughly on both sides of the firebox and the floor and ceiling. Remember to place the ash and debris into a metal or non-combustible container.

See Disposal of Ashes.

4. Disposal of Ashes

- **Frequency:** As needed
- **By:** Homeowner

Ashes should be placed in a metal container with a tight-fitting lid. The closed container of ashes should be placed on a non-combustible floor or on the ground, well away from all combustible materials, pending final disposal.

If the ashes are disposed of by burial in soil or otherwise locally dispersed, they should be retained in the closed container until all cinders have been thoroughly cooled.

⚠ WARNING



Disposal of Ashes

- Ashes should be placed in metal container with tight fitting lid.
- Ashes should be retained in closed container until all cinders have thoroughly cooled.

5. Cleaning the Glass

- **Frequency:** When clear view of the firepot becomes obscure
- **By:** Homeowner
  a. Appliance must be completely cool before cleaning glass.
  b. Vacuum fly ash from glass and door rope.
  c. Use a damp paper towel or any non-abrasive glass cleaner. Wipe off with dry towel.

⚠ CAUTION

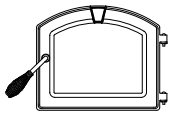

Handle glass assembly with care.

When cleaning glass:

- Avoid striking, scratching or slamming glass.
- Do NOT clean glass when hot.
- Do NOT use abrasive cleaners.
- Refer to maintenance instructions.
- Do NOT operate with glass cracked, broken or scratched.

6. Cleaning the Hopper

- **Frequency:** Monthly or after burning 25 bags of fuel
- **By:** Homeowner

After burning approximately 25 bags of fuel you will need to clean the hopper to prevent sawdust build-up.

A combination of sawdust and pellets on the bottom end of the auger reduces the amount of fuel supply to the firepot. This can result in nuisance shutdowns and mis-starts.

a. The appliance must be in complete shutdown. Allow the appliance to completely run out of pellets and cool down.
b. Empty the hopper of any remaining pellets.
c. Vacuum the hopper and feed tube. To access the feed tube remove the four screws from the auger cover located inside of the hopper.

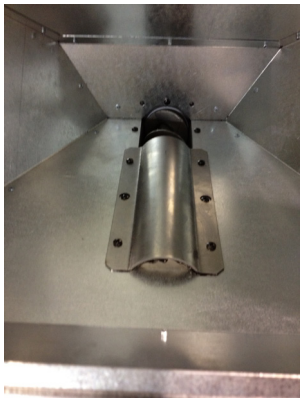

7. Cleaning the Exhaust Path, Baffles & Drop Tube

- **Frequency:** Monthly or every 25 bags or more frequently depending on ash build-up.
- **By:** Homeowner

a. Appliance must be completely cool.

b. Open the door and remove the center baffle first and then the right and left baffles. Thoroughly vacuum the exhaust path and drop tube and continue throughout the rest of the firebox. Also vacuum the front and back of the baffles.

c. Using a small brush, clean the inner walls of the exhaust outlet from the access hole inside the firebox. The access hole will be visible following the removal of the left side baffle. After loosening up debris on the inner walls of the outlet, vacuum out.

— This is important as the exhaust temperature probe is attached to the right side of the outlet. If this is not maintained on a regular basis, the appliance will experience nuisance shut downs and/or missed ignitions.

d. Replace the right and left baffles and then the center baffle and close and latch the door.

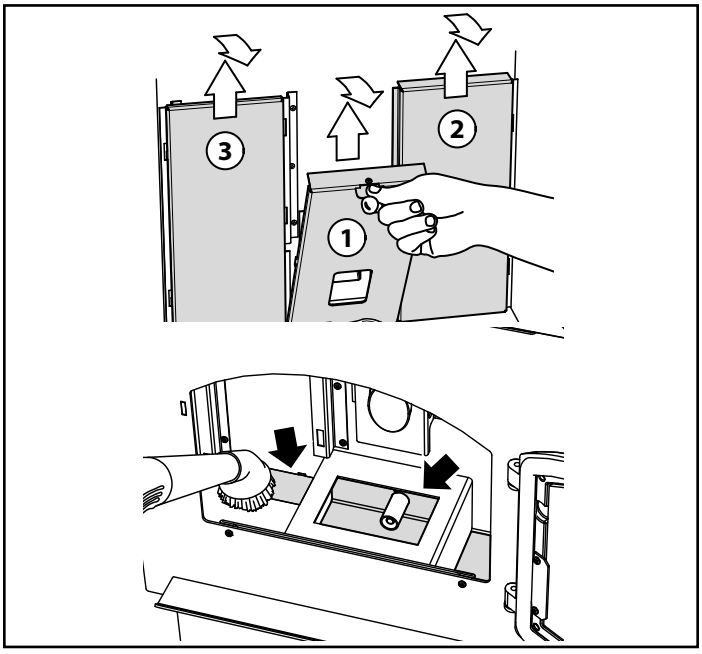

8. Door Handle Inspection

- **Frequency:** Monthly or prior to heating season
- **By:** Homeowner

The gasket between the glass and firebox should be inspected periodically to make sure there is a good seal.

NOTE: Quadra-Fire recommends using a heavy duty vacuum cleaner specifically designed for solid fuel appliance cleaning.

9. Cleaning Convection Blower - Requires No Lubrication

- **Frequency:** Monthly depending on Dust/Dirt build-up
- **By:** Homeowner or Qualified Service Technician

a. Be sure the appliance is allowed to cool and has been unplugged.

b. Remove the right side panel.

c. Using 7/16 socket or wrench, remove convection blower bolts and bracket.

d. Sweep or vacuum out any build-up on the impellers. Use a brush or compressed air to loosen dirt if needed.

— Avoid damaging the impellers.

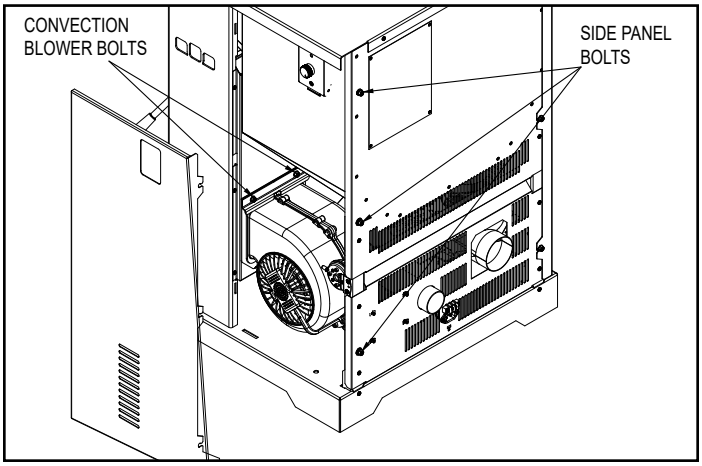

10. Cleaning Exhaust Blower - Requires No Lubrication

- **Frequency:** Yearly or more frequently depending on ash build-up
- **By:** Homeowner or Qualified Service Technician

a. Be sure the appliance is allowed to cool, has been unplugged and the exhaust blower is off.

b. Remove the left side panel.

c. Remove the six screws holding the exhaust blower motor to the housing and remove the motor. Using caution as to not damage the gasket when removing the blower. If damage occurs, install a new gasket available as a replacement part.

d. Vacuum the blower's impellers. Use care not to bend or damage the blower fins.

e. Using a brush or vacuum attachment, clean the inside of the exhaust outlet.

f. Reattach the motor. Make sure the wires are attached to the terminals on the blower.

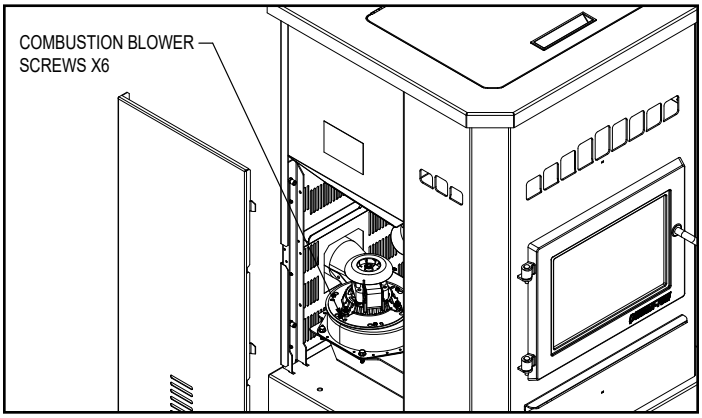

11. <u>Preparing Firebox for Non-Burn Season</u>

- **Frequency:** Yearly
- **By:** Homeowner

a. Be sure the appliance is allowed to cool, has been unplugged and the exhaust blower is off.

b. Remove all ash from the firebox and vacuum thoroughly.

c. Paint all exposed steel, including cast-iron.

— Purchase high temperature paint from your local retailer.

— Must use a high-temperature paint made specifically for heating appliances.

12. <u>Soot and Fly Ash: Formation & Need for Removal in Exhaust Venting System.</u>

- **Frequency:** Yearly or more frequently depending on ash build-up.
- **By:** Qualified Service Technician/Homeowner

Be sure the appliance is allowed to cool, has been unplugged and the exhaust blower is off.

The products of combustion will contain small particles of fly ash. The fly ash will collect in the exhaust venting system and restrict the flow of the flue gases.

At start-up if there is incomplete combustion, or if there is a shutdown or incorrect operation of the appliance it will lead to some soot formation. This will collect in the exhaust venting system.

The venting (chimney) system may need to be cleaned at least once a year or more often depending upon the quality of your fuel or if there are any horizontal pipe sections. Ash will build up more quickly in the horizontal sections and elbows.

D. High Ash Fuel Content Maintenance

- **Frequency:** As needed
- **By:** Homeowner

Poor quality pellet fuel, lack of maintenance, or if the small dial control is set to a less than optimum setting, poor combustion conditions that make the firepot fill quickly with ashes and clinkers.

This condition makes the appliance susceptible to overfilling the firepot with pellets which may result in smoking, sooting and possible hopper fires. The figure below shows an example where the firepot overfills, pellets back up into the feed tube and ash has accumulated in the firebox.

An inefficient and non-economical method of burning of fuel caused by poor quality pellet fuel is shown below.

If the ash buildup exceeds the half way point in the firepot **IMMEDIATE ATTENTION AND CLEANING IS REQUIRED**.

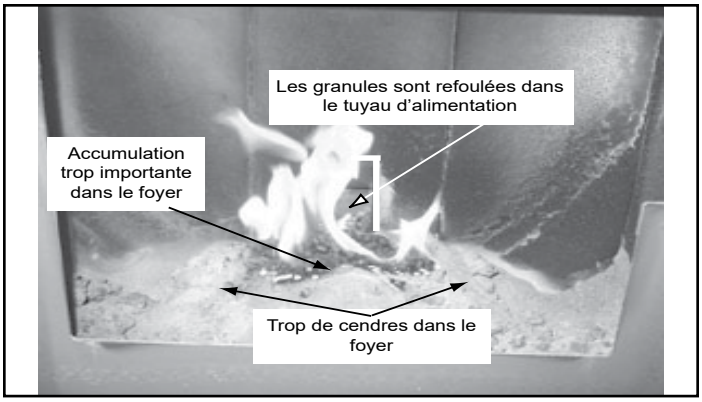



E. Frequently Asked Questions

What causes my glass to become dirty?

If the glass has white ash build up it is normal and the glass should be cleaned. If it is a black soot build up airflow through the unit may be restricted. The most often cause is overdue maintenance and cleaning. See “Maintaining and Servicing Appliance” in the owner’s manual and/or make adjustments to the trim control.

How can I get more heat out of the appliance?

The most often cause of diminished heat output is overdue maintenance and cleaning. See “Maintaining and Servicing Appliance” in the owner’s manual.

What should I do if I smell smoke or there is ash/soot coming from the appliance?

While there will always be some smoke smell from wood burning appliances (including pellet) you should investigate all venting to make sure it is sealed properly. Most venting requires silicone to seal the seams. In addition most homes are built very tight today and with exhaust systems can create negative pressure in the home. See “Negative Pressure” under “Getting Started” in the owner’s manual if you have checked the venting but still have smoke coming from the appliance. For ash or soot check the above and the exhaust blower housing and seals.

Why would my appliance run fine last winter but not start this fall?

It is possible that the stove was not properly prepared for the Non-burn season. See “Troubleshooting” in the owner’s manual.

Why would the metal on the inside of the appliance begin to flake?

There are some pellet mills that get their raw materials from lumber mills that purchase logs that are transported in sea water. These pellets can have a higher salt content and cause the metals in the unit to corrode prematurely and deteriorate. If you are seeing any components inside the firebox deteriorate it is recommended to change pellet brands immediately.

Is there a place to lubricate the blowers to quiet them down?

The most often cause of noisy blowers is from the impellers becoming dirty over time. See “General Maintenance & Cleaning” under “Maintaining & Servicing Appliance” in the owner’s manual. No form of lubrication should ever need applied to the blowers.

What is the metal object with the bend in it for that came inside the plastic bag?

It is a clean-out tool used to help clean the firepot and remove any jams in the rare event they occur in the feed tube.

Why is there a black residue building up on the outside of my home?

Wind can cause this to happen. If the appliance is operating correctly very little soot should ever exit the termination cap. Also check to be sure the venting is installed per the owner’s manual and local codes.

Do I need an outside air kit?

Outside air is required for mobile home installations and in some jurisdictions. Refer to “Listing & Code Approvals” and “Mobile Home Installation”. Also refer to local building codes.

I am seeing sparks coming out of my pipe (termination cap) outside is this safe?

This is normal. As long as clearances to combustibles were followed this is safe.

I have no power to anything. Does this unit have a circuit breaker or fuse or a reset button?

This unit has one serviceable fuse on the control board and a resetable snap switch mounted to the feed tube.

Can I burn corn in my unit?

NO, corn is not an approved fuel.

Where is the serial # of my unit is located?

The serial # is located on the back of the stove.

F. Glass Replacement

WARNING

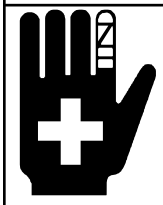

- Glass is 5mm thick high temperature heat-resistant ceramic glass.
- DO NOT REPLACE with any other material.
- Alternate material may shatter and cause injury.

1. Open the door from the appliance by lifting door off of hinge pins and lay on a flat surface face down.
2. Using a Phillips Head screw driver, remove the 3 brackets and set aside.
3. Remove old glass and replace with the new glass.
4. Re-install the brackets using the same screws.

A. Maintenance and Service Log

Date of Service	Performed By	Description of Service

B. Service Parts List

QUADRA-FIRE® **Service Parts**

Pellet Cabinet Style Stove

OUTFITTER-II

Beginning Manufacturing Date: Jul 2022
Ending Manufacturing Date: Active

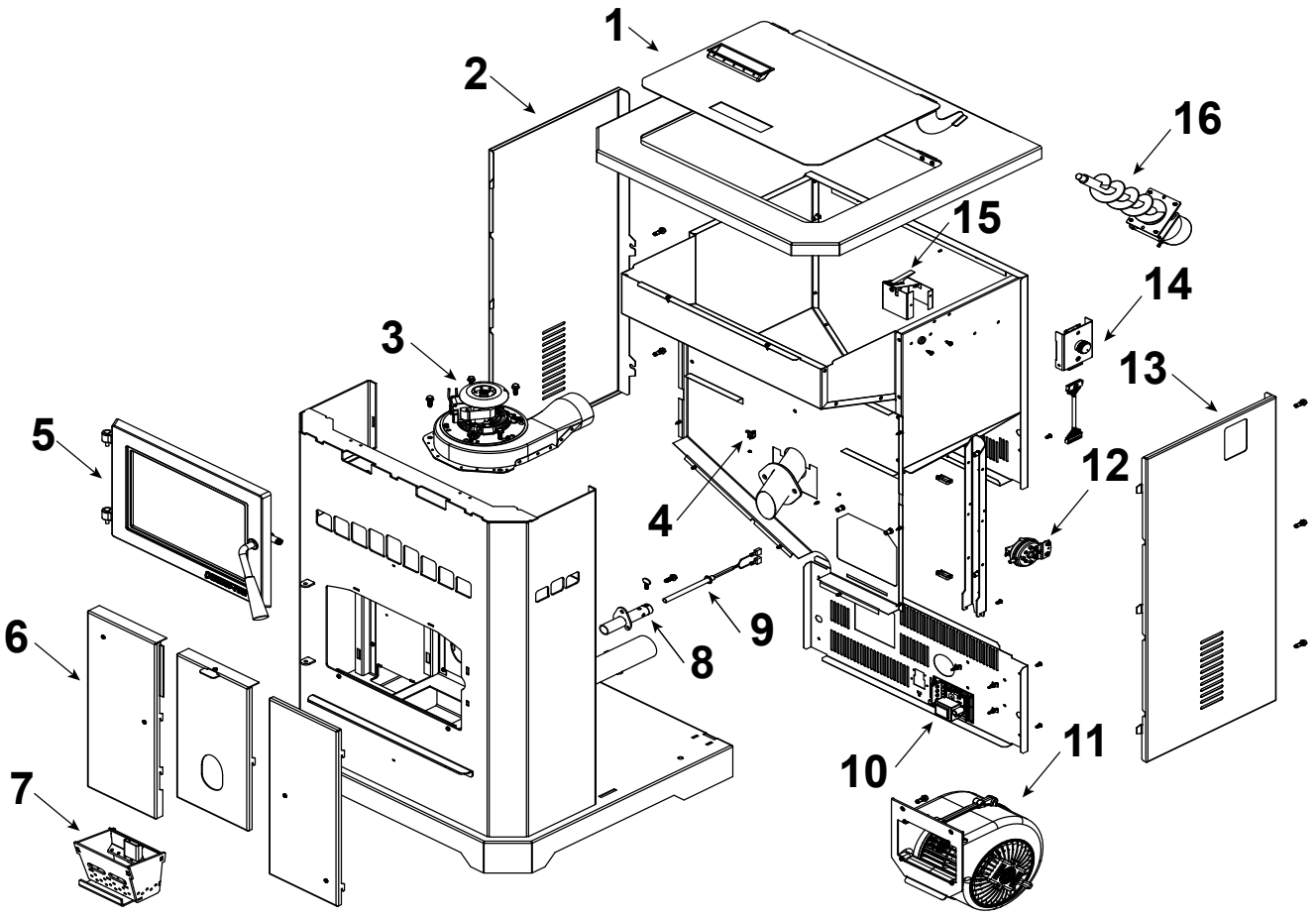

Part number list on following pages.

07/21

IMPORTANT: THIS IS DATED INFORMATION. When requesting service or replacement parts for your appliance please provide model number and serial number. All parts listed in this manual must be ordered from a dealer.

ITEM	DESCRIPTION	COMMENTS	PART NUMBER	Stocked at Depot
1	Hopper Lid Assembly		SRV7086-019	
	Hopper Extension		PPHE200	
	Handle, Hopper Lid		SRV200-0110	
2	Side Curtain, Left Hand		SRV7086-154	Y
3	Exhaust Combustion Blower		812-4400	Y
	Gasket, Between Blower Housing and Stove		SRV240-0812	Y
	Gasket, Between Blower Housing and Motor		812-4710	Y
4	Snap disc, Manual Reset		SRV230-0080	Y
5	Door Assembly		SRV8105-021	Y
6	Baffle Kit		SRV7077-006	
7	Firepot		SRV7077-003	Y
8	Igniter Chamber Kit		SRV7077-110	
9	Igniter Kit		SRV7000-660	Y
10	Control Board		SRV7104-050	Y
11	Convection Blower		KS-5020-1052	Y
	Convection Blower Gasket		SRV7081-195	
	Convection Blower Bracket		SRV7081-210	
12	Vacuum Switch		SRV7000-531	Y
	Vacuum Hose, 5/32 ID	3 Ft	SRV240-0450	Y
	Hose, Barb Assembly		SRV229-0920	
13	Side Curtain, Right Hand		SRV7086-153	Y
14	Dial Control		SRV7080-036	Y
	Wire Harness, Dial Control		SRV7000-667	Y
15	Hopper Switch		SRV7000-612	Y

#4 Door Assembly

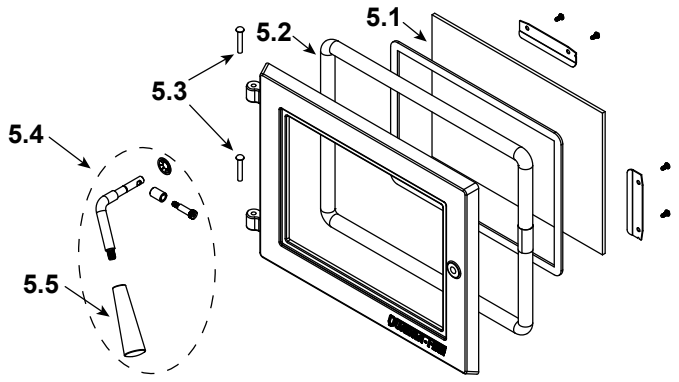

5	Door Assembly		SRV8105-021	Y
5.1	Glass Assembly		SRV8105-173	
5.2	Rope, Door, 3/4” x 84”		832-1680	
5.3	Hinge Pins	Pkg of 2	433-1590/2	
5.4	Threaded Handle Assembly Kit		SRV7093-024D	Y
5.5	Handle Black Phenolic Kit		KS-5140-1442	Y

See Following page for additional servcie parts

7/21

IMPORTANT: THIS IS DATED INFORMATION. When requesting service or replacement parts for your appliance please provide model number and serial number. All parts listed in this manual must be ordered from a dealer.



ITEM	DESCRIPTION	COMMENTS	PART NUMBER	Stocked at Depot
#16 Feed Assembly	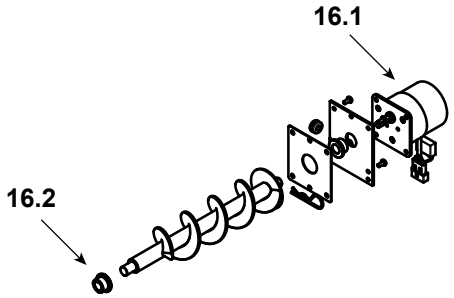			
16	Feed Assembly Kit		SRV7077-014	**Y**
16.1	Feed Motor		SRV7000-670	**Y**
16.2	Feed Shaft Bushing	Pkg of 2	7000-600/2	**Y**
	Power Cord		812-1180	**Y**
	Ambient Probe		SRV7000-668	**Y**
	Component Pack		SRV8104-028	
	Exhaust Probe		SRV7000-669	**Y**
	Wire Harness		SRV7093-184	**Y**
	Wire Clip	Pkg of 10	7000-400/10	**Y**

QUADRA-FIRE®

NOTHING BURNS LIKE A QUAD

CONTACT INFORMATION

Hearth & Home Technologies
352 Mountain House Road
Halifax, PA 17032
Division of HNI INDUSTRIES

**Please contact your Quadra-Fire dealer with any questions or concerns.
For the number of your nearest Quadra-Fire dealer
log onto www.quadrafire.com**

CAUTION



DO NOT DISCARD THIS MANUAL

- Important operating and maintenance instructions included.
- Read, understand and follow these instructions for safe installation and operation.
- Leave this manual with party responsible for use and operation of this appliance.



We recommend that you record the following pertinent information for your heating appliance.

Date purchased/installed:	
Serial Number:	Location on appliance:
Dealership purchased from:	Dealer Phone: 1( ) -
Notes:	

This product may be covered by one or more of the following patents: (United States) 5341794, 5263471, 6688302, 7216645, 7047962 or other U.S. and foreign patents pending.

HEARTH&HOME technologies™

Installation Manual

Installation & Appliance Set-Up

INSTALLER: Leave this manual with party responsible for use and operation.
OWNER: Retain this manual for future reference.

NOTICE: DO NOT DISCARD THIS MANUAL

QUADRA-FIRE®

PELLET BURNING APPLIANCE

MODEL NUMBER:
OUTFITTER-II

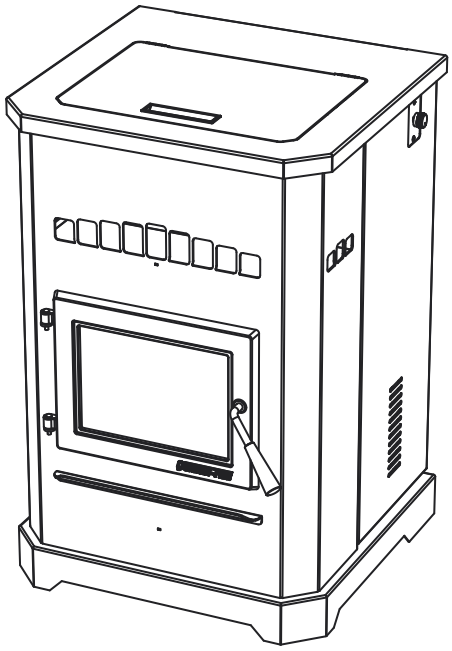

EM OTL

Pellet Fuels Institute

ETL LISTED C US Intertek

⚠ CAUTION

Tested and approved for wood pellets, Burning of any other type of fuel voids your warranty.

Installation and service of this appliance should be performed by qualified personnel. Hearth & Home Technologies recommends HHT Factory Trained or NFI certified professionals.

hearthED FACTORY TRAINING Fuel Your Fire

NFI NATIONAL FIREPLACE INSTITUTE® A CERTIFICATION AGENCY

⚠ WARNING

If the information in these instructions is not followed exactly, a fire could result causing property damage, personal injury, or death.

- Do not store or use gasoline or other flammable vapors and liquids in the vicinity of this or any other appliance.
- Do not over fire - If appliance or chimney connector glows, you are over firing. Over firing will void your warranty.
- Comply with all minimum clearances to combustibles as specified.

Failure to comply may cause house fire.

⚠ WARNING

HOT SURFACES!
Glass and other surfaces are hot during operation AND cool down.

Hot glass will cause burns.

- Do not touch glass until it is cooled
- NEVER allow children to touch glass
- Keep children away
- CAREFULLY SUPERVISE children in same room as fireplace.
- Alert children and adults to hazards of high temperatures
- **High temperatures may ignite clothing or other flammable materials.**
- Keep clothing, furniture, draperies and other flammable materials away.

⚠ CAUTION

Check building codes prior to installation.

- Installation MUST comply with local, regional, state and national codes and regulations.
- Consult local building, fire officials or authorities having jurisdiction about restrictions, installation inspection, and permits.

NOTE: To obtain a French translation of this manual, please contact your dealer or visit www.quadrafire.com.

REMARQUE : Pour obtenir une traduction française de ce manuel, s'il vous plaît contacter votre revendeur ou visitez www.quadrafire.com.

Safety Alert Key:

- **DANGER!** Indicates a hazardous situation which, if not avoided will result in death or serious injury.
- **WARNING!** Indicates a hazardous situation which, if not avoided could result in death or serious injury.
- **CAUTION!** Indicates a hazardous situation which, if not avoided, could result in minor or moderate injury.
- **NOTICE:** Indicates practices which may cause damage to the appliance or to property.

TABLE OF CONTENTS

1 Important Safety Information

A. Appliance Certification 3
B. Appliance Emissions Certification 3
C. BTU & Efficiency Specifications 3
D. Glass Specifications. 4
E. Electrical Rating (on high) 4
F. Mobile Home Approved 4
G. Non-Combustible Materials 4
H. Combustible Materials 4
I. Sleeping Room 4
J. Stove Composition 4
K. California - Prop65 4

2 Getting Started

A. Design, Installation & Location Considerations 5
B. Thermostat Wall Control Location 6
C. Tools And Supplies Needed 6
D. Inspect Appliance and Components 6
E. Install Checklist 7

3 Dimensions and Clearances

A. Appliance Dimensions 8
B. Clearances to Combustibles (UL and ULC) 12
C. Hearth Pad Requirements 13
D. Alcove 14

4 Vent Information

A. Venting Termination Minimum Requirements. 15
B. Avoiding Smoke and Odors 16
C. Negative Pressure 17
D. Draft17
E. Minimum Vacuum Requirements 17
F. Chimney and Exhaust Connection 17
G. Equivalent Feet of Pipe 18
H. Pipe Selection Chart 18

5 Venting Systems

A. Through The Wall 19
B. Vertical into Existing Class A Chimney 20
C. Vertical - Interior - Typical Installation 20
D. Through The Wall & Vertical - External 20
E. Masonry 21
F. Alternate Masonry 21

6 Appliance Set-Up

A. Outside Air Kit 22
B. Top Vent Adapter Installation 23
C. Rear Vent Adapter Installations 23
D. Thermostat Installation. 24

7 Mobile Home Installation 25

8 Reference Materials

A. Service & Maintenance Log 26

➔ = Contains updated information

Quadra-Fire is a registered trademark of Hearth & Home Technologies.

1 Important Safety Information

A. Appliance Certification

Model	OUTFITTER-II
Laboratory	UL LLC
Report No.	MH60687
Type	Solid Fuel Room Appliance/Pellet Fuel Burning Type
Standard	ASTM E1509-12 and ULC S627-00 Room Appliance Pellet Fuel Burning type and (UM) 84-HUD, Mobile Home Approved.

B. Appliance Emissions Certification

Model	OUTFITTER-II
Laboratory	OMNI Test Laboratories, Inc.
Report No.	0135PS041E
Standard	Method 28R, ASTM E1509-04 and ASTM E2779
Can be found at: www.quadrafire.com/about-us/epa-certification	

The OUTFITTER-II is Certified to comply with 2020 particulate emission standards.



This pellet appliance needs periodic inspection and repair for proper operation. Consult the owner's manual for further information. It is against federal regulations to operate this pellet appliance in a manner inconsistent with operating instructions in this manual.

NOTICE: This installation must conform with local codes. In the absence of local codes you must comply with the **ASTM E1509-04, ULC S627-00 and (UM) 84-HUD**.

C. BTU & Efficiency Specifications

EPA Certification Number:	128-18
EPA Certified Emissions:	0.53 grams per hour
***LHV Tested Efficiency:**	87.5%
****HHV Tested Efficiency:**	81.9%
*****EPA BTU Output:**	9,605 to 40,667 per hr
******BTU Input:**	11,676 to 49,207 per hr
Vent Size:	3" or 4" Type "L" or "PL"
Hopper Capacity:	130 lbs.
Fuel	Premium Wood Pellets
* Weighted average LHV (Low Heating Value) efficiency using data collected during EPA emissions tests in accordance with the requirements of CSA B415.1.	
** Weighted average HHV (High Heating Value) efficiency using data collected during EPA emissions tests in accordance with the requirements of CSA B415.1.	
*** A range of BTU outputs calculated using HHV efficiency and the burn rates from the EPA tests.	
**** Based on the maximum feed rate per hour multiplied by approximately 8600 BTU's which is the average BTU's from a pound of pellets.	

D. Glass Specifications

This appliance is equipped with 5mm ceramic glass. Replace glass only with 5mm ceramic glass. Please contact your dealer for replacement glass.

E. Electrical Rating (on high)

115 VAC, 60 Hz, Start 2.6 Amps, Run 2.3 Amps

F. Mobile Home Approved

- This appliance is approved for mobile home installations when not installed in a sleeping room and when an outside combustion air inlet is provided.
- The structural integrity of the mobile home floor, ceiling, and walls must be maintained.
- The appliance must be properly grounded to the frame of the mobile home with #8 copper ground wire, and use only listed double-wall connector pipe.
- Outside Air Kit, part 811-0872 or OAK-3 must be installed in a mobile home installation.
- Appliance must be secured to mobile home structure.

G. Non-Combustible Materials

Material which will not ignite and burn, composed of any combination of the following:

- Steel
- Plaster
- Brick
- Iron
- Concrete
- Tile
- Glass
- Slate

Materials reported as passing **ASTM E 136, Standard Test Method for Behavior of Metals, in a Vertical Tube Furnace of 750° C**.

H. Combustible Materials

Material made of/or surfaced with any of the following materials:

- Wood
- Compressed Paper
- Plant Fibers
- Plastic
- Plywood/OSB
- Sheet Rock (drywall)

Any material that can ignite and burn: flame proofed or not, plastered or non-plastered.

I. Sleeping Room

When installed in a sleeping room it is recommended that 3ft of vertical be installed prior to horizontally exiting the room and a smoke/CO alarm be installed in the bedroom. The size of the room must be at least 50ft³ per 1,000 Btu/hr stove input, if the stove exceeds the room size, outside air must be installed.

J. Stove Composition

These pellet burning stoves are made of steel, cast iron or a combination of both with a ceramic viewing glass. These stoves incorporate a self-feeding system including a fuel storage hopper and a mechanical feed system which is controlled by a micro-processing control board. Each model contains a variable speed distribution blower to circulate room air through the heat exchanger and out to the room and a combustion blower which forces the exhaust out of the stove.

K. California - Prop65

WARNING

This product and the fuels used to operate this product (wood), and the products of combustion of such fuels, can expose you to chemicals including carbon black, which is known to the State of California to cause cancer, and carbon monoxide, which is known to the State of California to cause birth defects or other reproductive harm. For more information go to: WWW.P65Warnings.ca.gov

WARNING



Fire Risk

Hearth & Home Technologies disclaims any responsibility for, and the warranty will be voided by, the following actions:

- Installation and use of any damaged appliance.
- Modification of the appliance.
- Installation other than as instructed by Hearth & Home Technologies.
- Installation and/or use of any component part not approved by Hearth & Home Technologies.
- Operating appliance without fully assembling all components.
- Operating appliance without legs attached (if supplied with appliance).
- Do NOT Over fire - If appliance or chimney connector glows, you are over firing.

Any such action that may cause a fire hazard.

Improper installation, adjustment, alteration, service or maintenance can cause injury or property damage.

For assistance or additional information, consult a qualified installer, service agency or your dealer.

NOTE: Hearth & Home Technologies, manufacturer of this appliance, reserves the right to alter its products, their specifications and/or price without notice.

2 Getting Started

A. Design, Installation & Location Considerations

1. Appliance Location

NOTICE: Check building codes prior to installation.

- Installation MUST comply with local, regional, state and national codes and regulations.
- Consult insurance carrier, local building inspector, fire officials or authorities having jurisdiction over restrictions, installation inspection and permits.

It is a good idea to plan your installation on paper, using exact measurements for clearances and floor protection, before actually beginning the installation. Location of the appliance and chimney will affect performance.

Consideration must be given to:

- Safety, convenience, traffic flow
- Placement of the chimney and chimney connector and to minimize the use of chimney offsets.
- Place the appliance where there will be a clear passage for a Listed chimney through the ceiling and roof (vertical) or through exterior wall (horizontal).
- Installing the required outside air kit will affect the location of the vent termination.

When locating vent and venting termination, the ideal location is to vent above roof line when possible. This minimizes the affects of wind loading.

Since pellet exhaust can contain ash, soot or sparks, you must consider the location of:

- Windows
- Air Intakes
- Air Conditioner
- Overhang, soffits, porch roofs, adjacent walls
- Landscaping, vegetation
- Horizontal or vertical vent termination

2. Floor Support

The supporting floor under the appliance must be able to handle the weight of the appliance, fuel load and the weight of the chimney.

Ensure that your floor will support these weights prior to installation. Add sufficient additional support to meet this weight requirement prior to installation. The weight of the appliance is 240 lbs.

WARNING

Risk of Fire.
Damaged parts could impair safe operation. Do NOT install damaged, incomplete or substitute components.

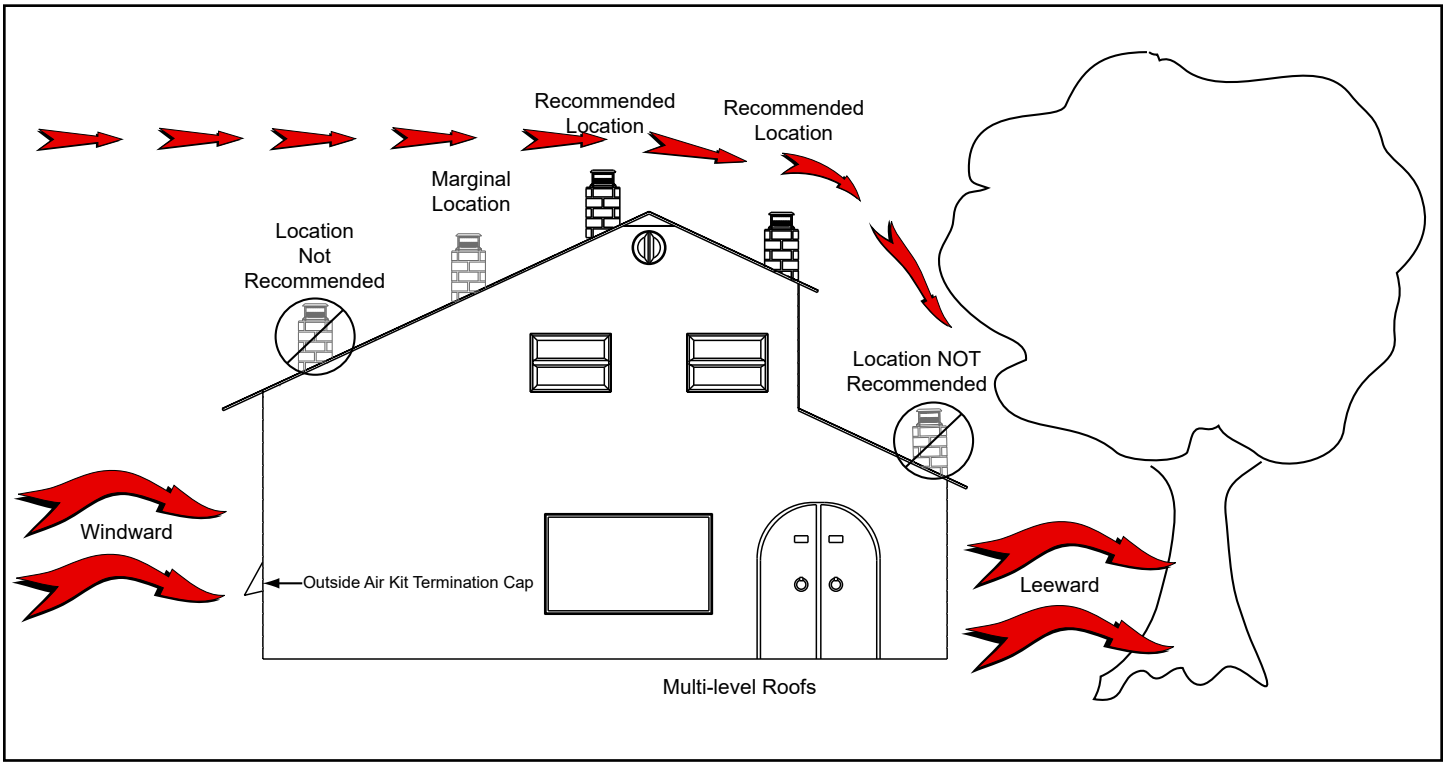

Figure 5.1

B. Thermostat Wall Control Location

The thermostat wall control's location will have some affect on the appliance's operation.

- Maximum wire length from appliance is 100 feet (30.48m) continuous non-spliced wire. Recommended 20 gauge wire, solid copper.
- When located close to the appliance, it may require a slightly higher temperature setting to keep the rest of the house comfortable.
- When located in an adjacent room or on a different floor level, you will notice higher temperatures near the appliance.

C. Tools And Supplies Needed

Tools and building supplies normally required for installation, unless installing into an existing masonry fireplace:

- Reciprocating Saw
- Channel Locks
- Hammer
- Phillips Screwdriver
- Tape Measure
- Plumb Line
- 1/4" Self-Tapping Screws
- Framing Material
- Hi-temp Caulking Material
- Gloves
- Safety Glasses
- Framing Square
- Electric Drill & Bits (1/4")
- Level

May also need:

- Vent Support Straps
- Venting Paint

D. Inspect Appliance and Components

- Open the appliance and remove all the parts and articles packed inside the Component Pack. Inspect all the parts and glass for shipping damage.
- Report to your dealer any parts damaged in shipment.
- All labels have been removed from the glass door.
- Plated surfaces have been wiped clean with a soft cloth, if applicable.
- **Read all the instructions before starting the installation. Follow these instructions carefully during the installation to ensure maximum safety and benefit.**
- **Follow pipe manufacturer instructions for installation and air clearance requirements.**

WARNING

Risk of Fire!

- Damaged parts could impair safe operation.
- Do NOT install damaged, incomplete or substitute components.

WARNING

Hearth & Home Technologies disclaims any responsibility for, and the warranty will be voided by, the following actions:

- Installation and use of any damaged appliance.
- Modification of the appliance.
- Installation other than as instructed by Hearth & Home Technologies.
- Installation and/or use of any component part not approved by Hearth & Home Technologies.
- Operating appliance without fully assembling all components.
- Operating appliance without legs attached (if supplied with appliance).
- Do NOT Over fire!

Or any such action that may cause a fire hazard.

E. Removal of Appliance from Pallet

1. Remove box and 2x4 structural boards being careful not to damage product
2. Using 3/8 socket or wrench, loosen the three retaining bolts on the back of stove and remove right and left panels
3. Using 7/16 socket or wrench, remove pallet mount screws and washers.
4. Remove pallet from under stove
5. Assemble side panels back on stove

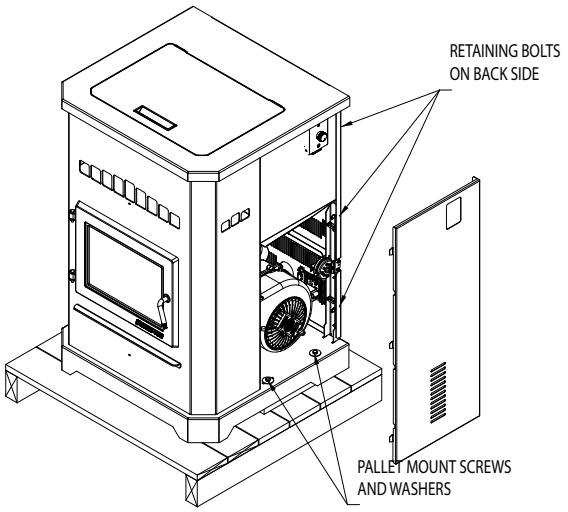

E. Install Checklist

ATTENTION INSTALLER:

Follow this Standard Work Checklist

This standard work checklist is to be used by the installer in conjunction with, not instead of, the instructions contained in this installation manual.

Customer: _____
Date Installed: _____
Lot/Address: _____
Location of Appliance: _____
Installer: _____
Dealer/Distributor Phone Number: _____
Serial Number: _____
Model Name: _____

WARNING! Risk of Fire or Explosion! Failure to install appliance to these instructions can lead to a fire or explosion.

Appliance Install	**YES**	**IF NO, WHY?**
Verified clearance to combustibles.	☐	_____
Appliance is leveled and connector is secured to appliance.	☐	_____
Hearth extension size/height decided.	☐	_____
Outside air kit installed.	☐	_____
Floor protection requirements have been met.	☐	_____
If appliance is connected to a masonry chimney, it should be cleaned and inspected by a professional. If installed to a factory built metal chimney, the chimney must be installed according to the manufacturer's instructions and clearances.	☐	_____
Venting/Chimney		
Chimney configuration complies with diagrams.	☐	_____
Chimney installed, locked and secured in place with proper clearance.	☐	_____
Chimney meets recommended height requirements (5 feet minimum vertical).	☐	_____
Roof flashing installed and sealed.	☐	_____
Terminations installed and sealed.	☐	_____
Electrical		
120 VAC unswitched power provided to the appliance.	☐	_____
Check outlet with multi-meter for proper polarity and voltage (115-120 VAC).	☐	_____
Record voltage reading: _____		
Clearances		
Verified all clearances meet installation manual requirements.	☐	_____
Mantels and wall projections comply with installation manual requirements.	☐	_____
Floor protection and heart extensions installed per manual requirements.	☐	_____
Appliance Setup		
All protective materials removed.	☐	_____
All labels have been removed from the door.	☐	_____
All packaging materials are removed from inside/under appliance.	☐	_____
Manual bag and all of its contents are removed from inside/under the appliance and given to the party responsible for use and operation.	☐	_____
Started appliance and verified that all motors and blowers operate as they should.	☐	_____
Checked draft using a Manometer. Record readings: _____	☐	_____
Checked vacuum using a Manometer. Record readings: _____	☐	_____

Hearth & Home Technologies recommends the following:
Photographing the installation and copying this checklist for your file.
That this checklist remain visible at all times on the appliance until the installation is complete.

Comments: Further description of the issues, who is responsible (Installer/Builder/Other Trades, ets.) and corrective action needed:

Comments communicated to party responsible _____ by _____ on _____
(Builder/Gen. Contractor) (Installer) (Date)

3 Dimensions and Clearances

A. Appliance Dimensions

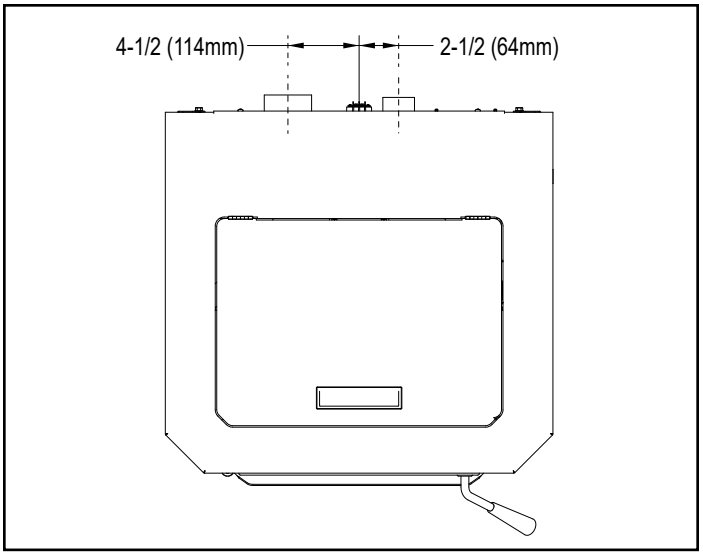

Figure 8.1 - Top View

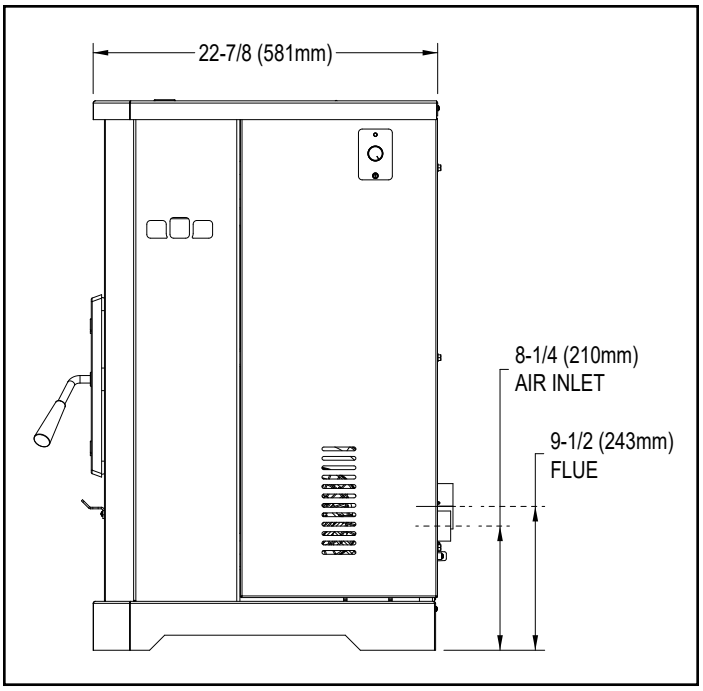

Figure 8.2 - Side View

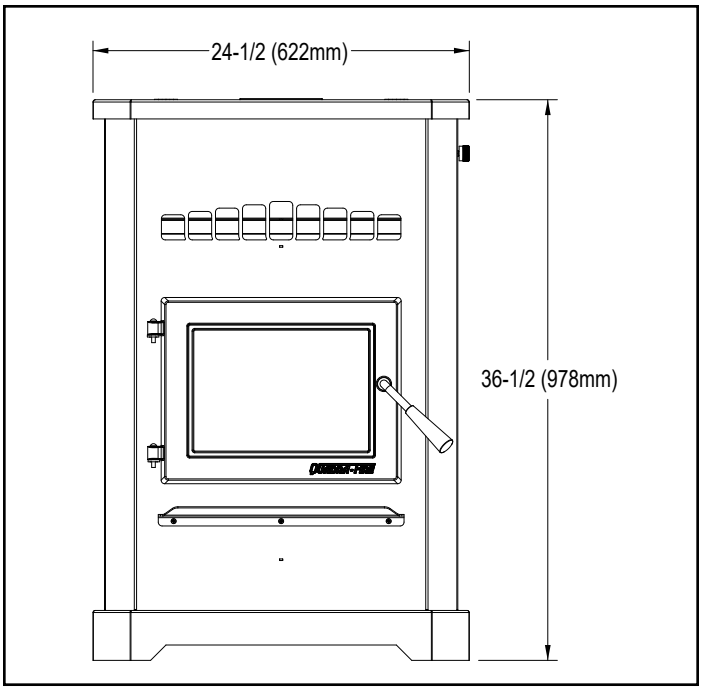

Figure 8.3 - Front View

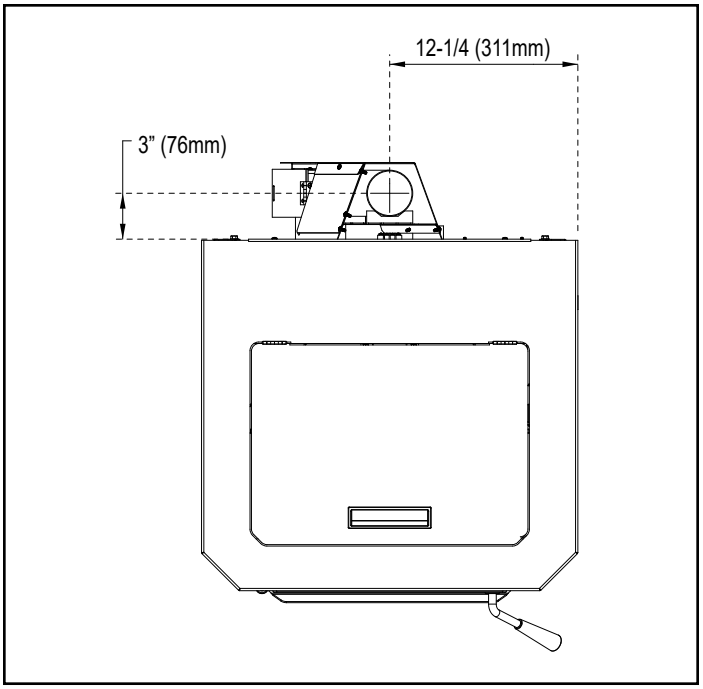

Figure 9.1 - Top View w/ Top Vent Adapter (TPVNT-7)

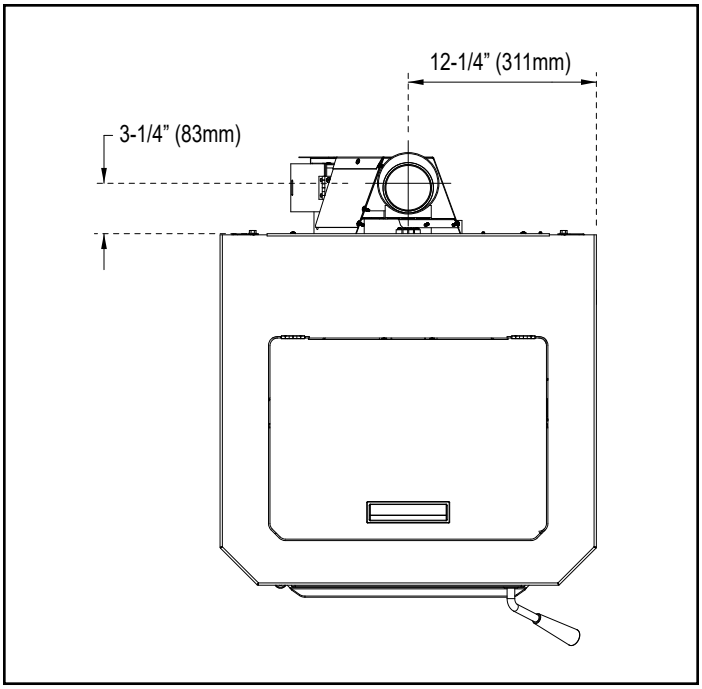

Figure 9.3 - Top View w/ Top Vent Adapter (TPVNT-7) & 3 to 4 inch Offset Adapter (811-0720)

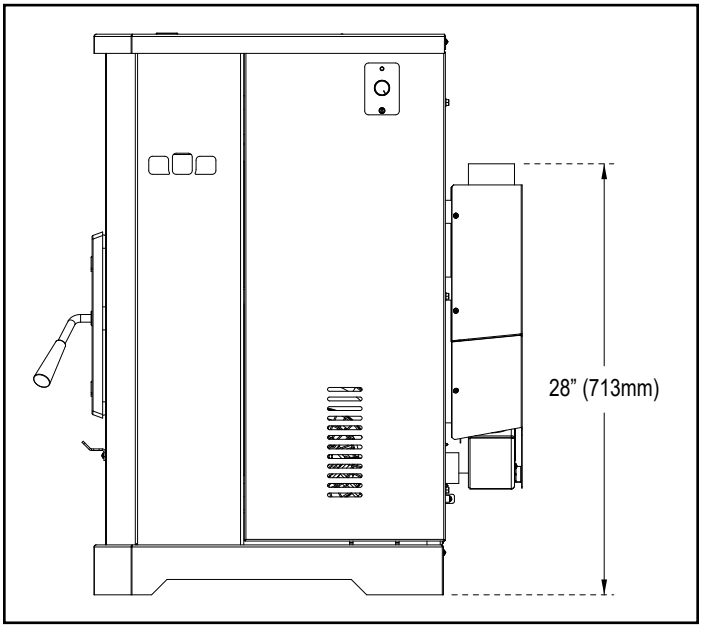

Figure 9.2 - Side View w/ Top Vent Adapter (TPVNT-7)

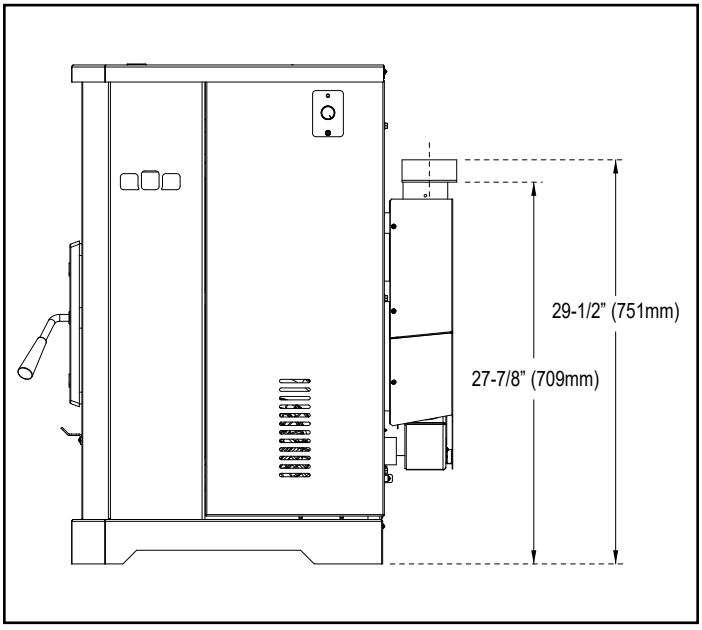

Figure 9.4 - Side View w/ Top Vent Adapter (TPVNT-7) & 3 to 4 inch Offset Adapter (811-0720)

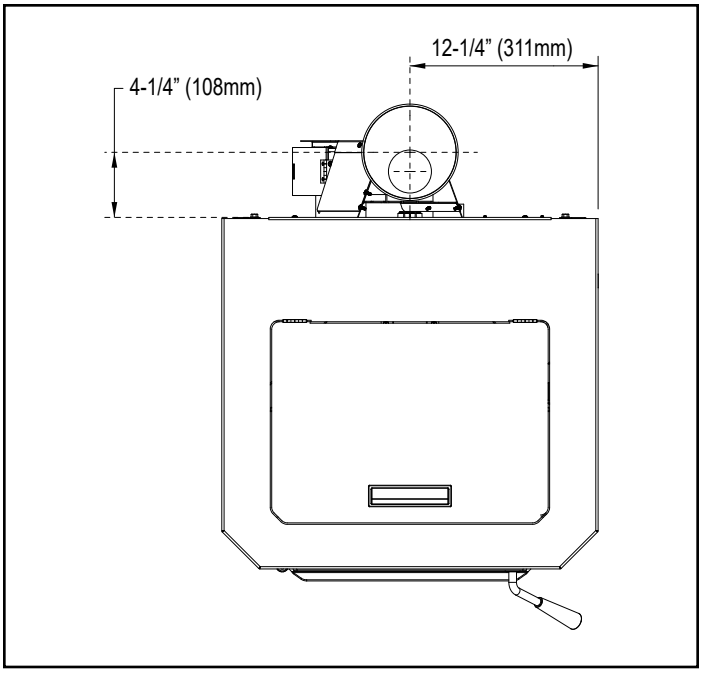

Figure 10.1 - Top View w/ Top Vent Adapter (TPVNT-7) & 3 to 6 inch Offset Adapter (812-3570)

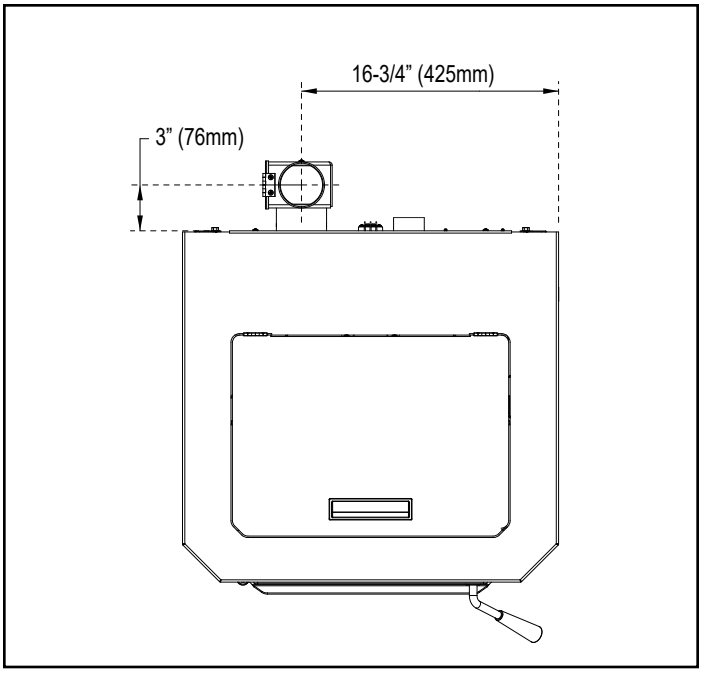

Figure 10.3 - Top View w/ Top Vent Adapter (TPVNT-6)

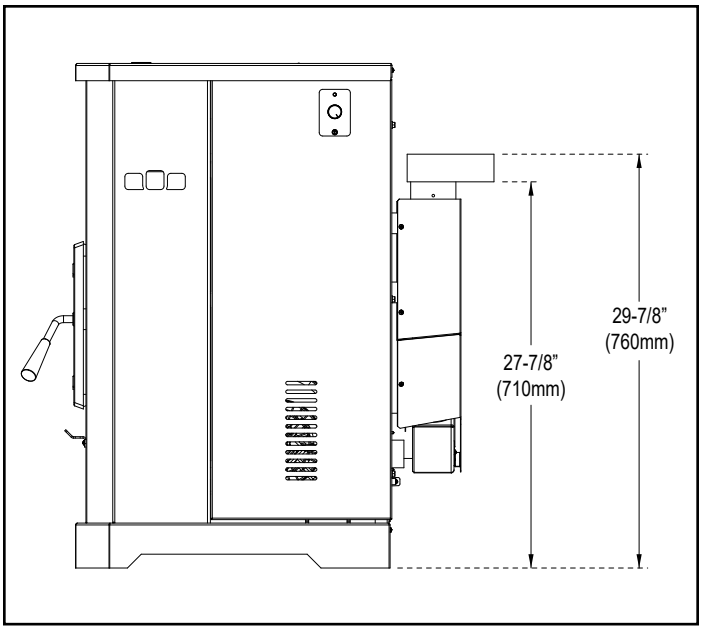

Figure 10.2 - Side View w/ Top Vent Adapter (TPVNT-7) & 3 to 6 inch Offset Adapter (812-3570)

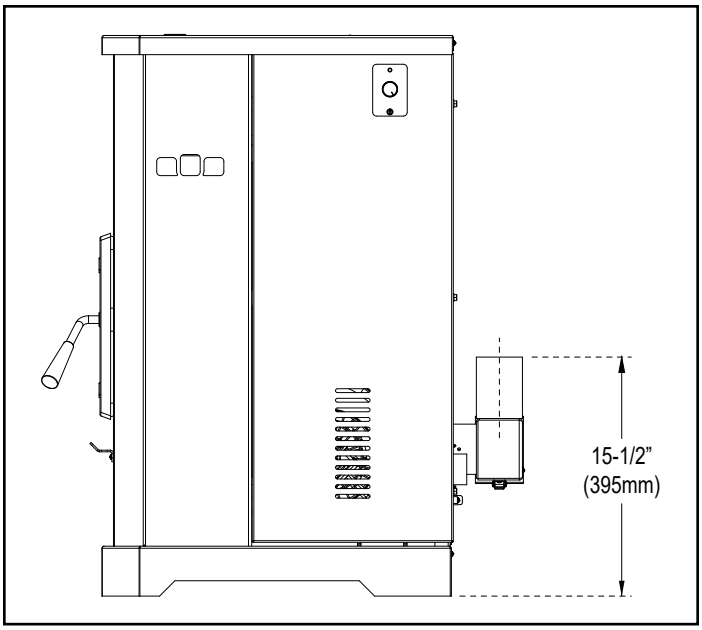

Figure 10.4 - Side View w/ Top Vent Adapter (TPVNT-6)

B. Clearances to Combustibles (UL and ULC)

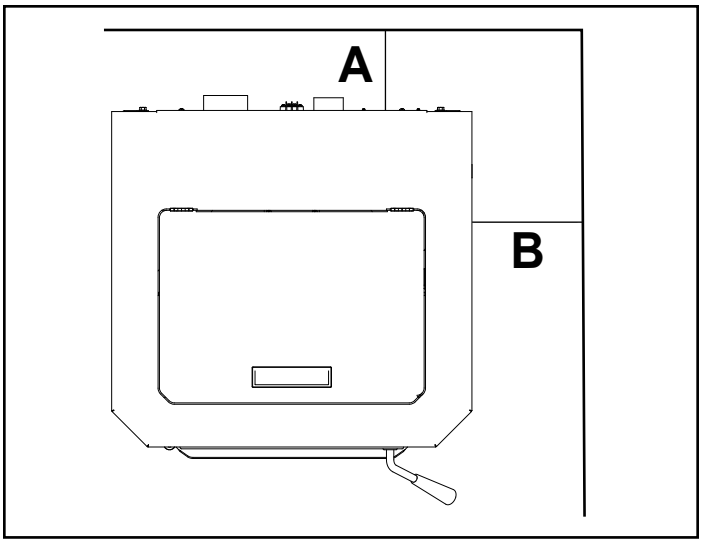

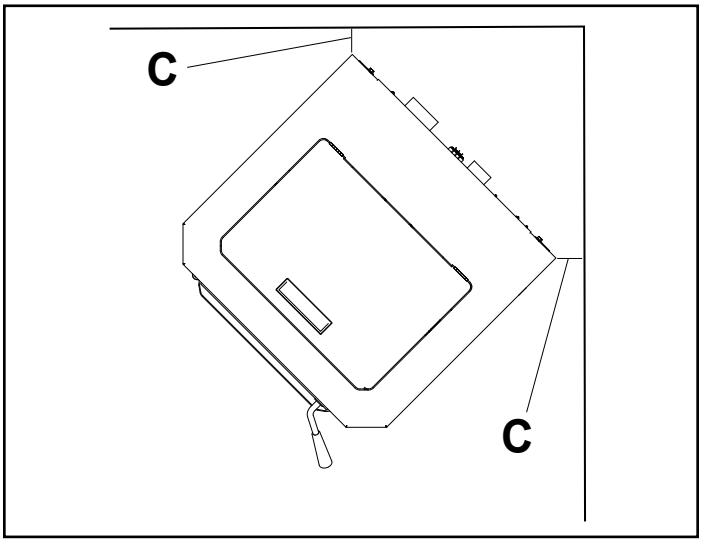

Straight Back Against Wall		Inches	Millimeters
A	Back Wall to Appliance	3	76
B	Side Wall to Appliance	9	229

Corner Installation		Inches	Millimeters
C	Walls to Appliance	3	76

Table 12.1

NOTE:
- Illustrations reflect typical installations and are FOR DESIGN PURPOSES ONLY.
- Illustrations/diagrams are not drawn to scale.
- Actual installation may vary due to individual design preference.

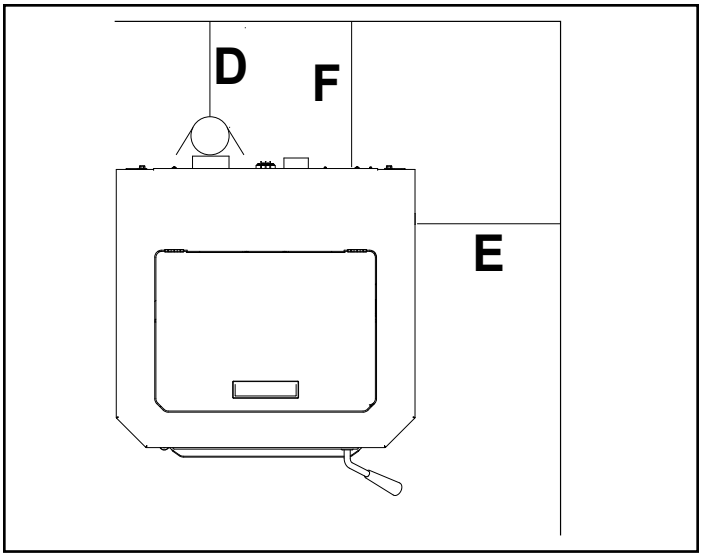

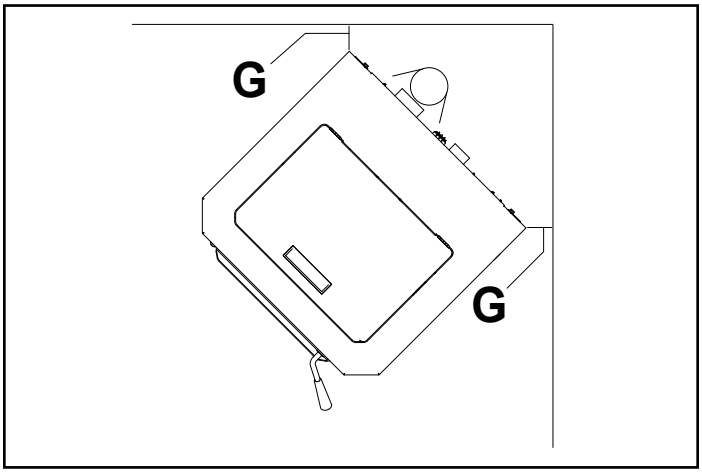

Installations with 3 to 3 inch Top Vent Adapter

Vertical Installation		Inches	Millimeters
D	Back Wall to Pellet Pipe	3	76
E	Side Wall to Appliance	9	229
F	Back Wall to Appliance	7-5/8	194

Corner Installation		Inches	Millimeters
G	Walls to Appliance	3	76

Table 12.2

Installations with 3 to 6 inch Offset Adapter

Vertical Installation		Inches	Millimeters
D	Back Wall to Pipe	3	76
E	Side Wall to Appliance	9	229
F	Back Wall to Appliance	10-1/4	260

Corner Installation		Inches	Millimeters
G	Walls to Appliance	3	76

Table 12.3

C. Hearth Pad Requirements (UL and ULC)

EMBER PROTECTION: It is necessary to install a Type I floor protector.

Floor protector must be non-combustible material, extending beneath appliance with a minimum of 6 inches (152mm) in front of glass and 6 inches (152mm) to both sides of the fuel loading door. Open the door and measure 6 inches (152mm) from the side edge of the opening in the face of the appliance.***See exception.**

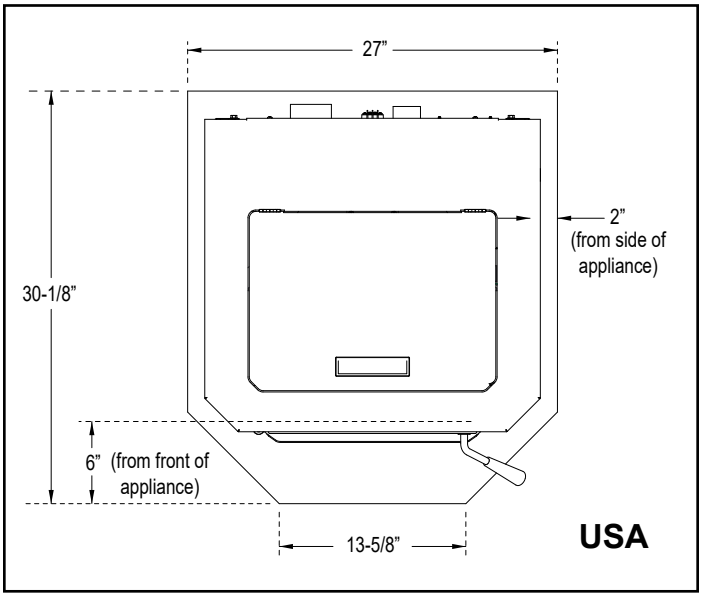

Figure 12.1

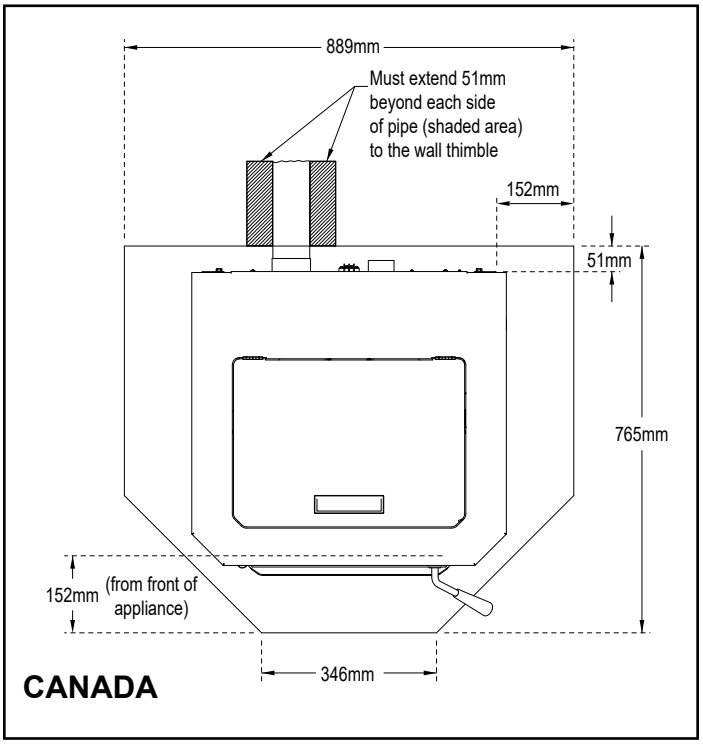

Figure 12.2

USA INSTALLATIONS: A non-combustible floor protection is recommended extending beneath the flue pipe when installed with horizontal venting or under the Top Vent Adapter with vertical installation.

CANADA INSTALLATIONS: A non-combustible floor protection extending beneath the flue pipe is **required** with horizontal venting or under the Top Vent Adapter with vertical installation.

WARNING

Fire Risk

Comply with all minimum clearances to combustibles as specified.

Failure to comply may cause house fire.

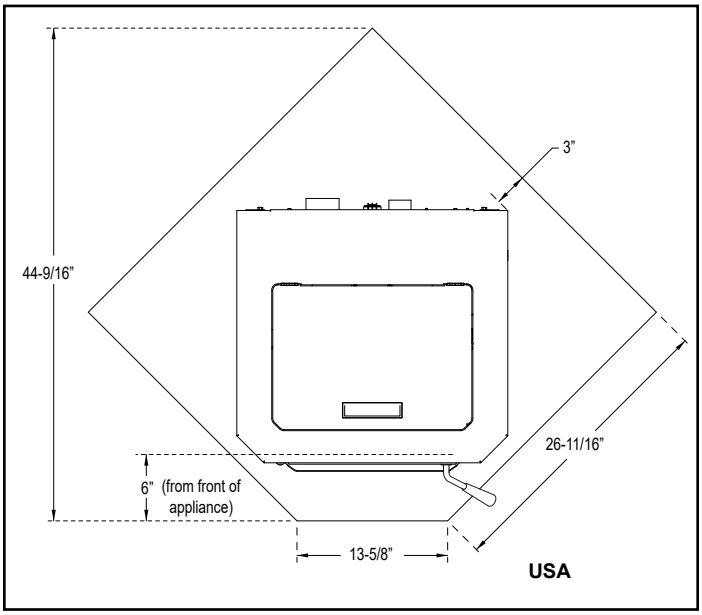

Figure 12.3

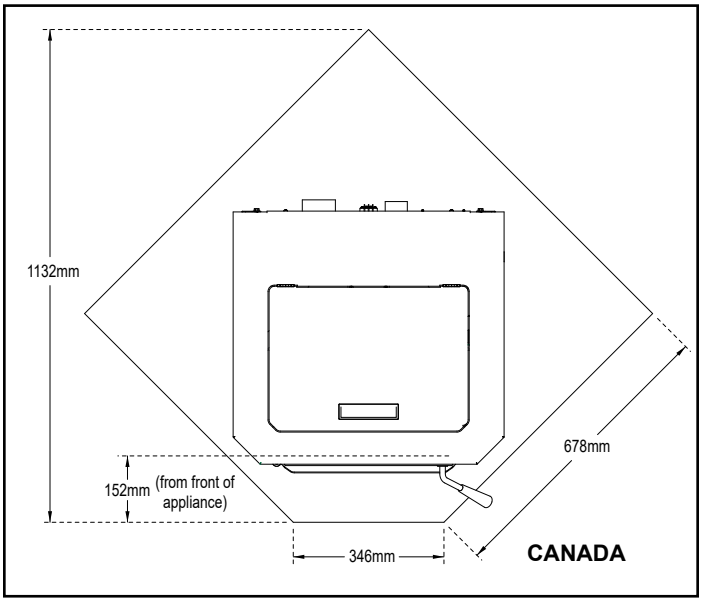

Figure 12.4

D. Alcove

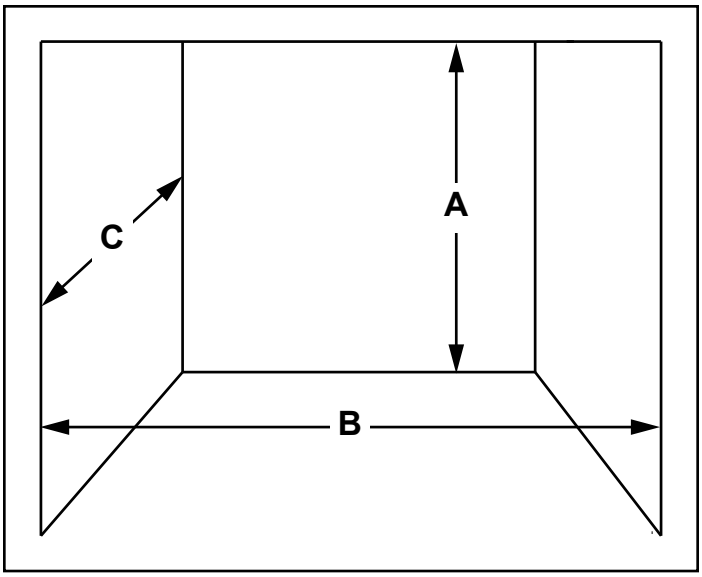

Figure 13.1

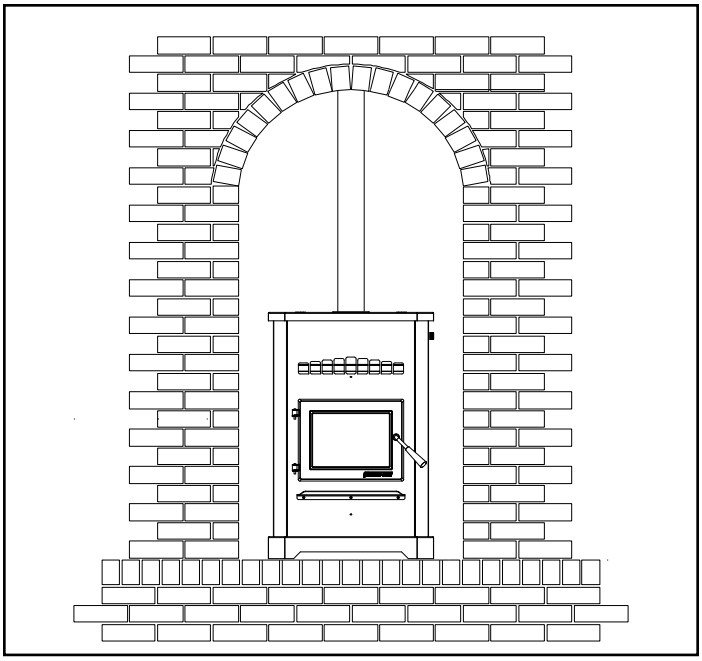

Figure 13.2

		Minimum*		Maximum	
		Inches	Millimeters	Inches	Millimeters
A	**Height**	52	1321	n/a	n/a
B	**Width**	42-1/2	1080	n/a	n/a
C	**Depth**	n/a	n/a	25-3/4	654
* All minimums listed are to a combustible surface.					

Table 13.1

NOTE:
- Illustrations reflect typical installations and are FOR DESIGN PURPOSES ONLY.
- Illustrations/diagrams are not drawn to scale.
- Actual installation may vary due to individual design preference.

4 Vent Information

A. Venting Termination Minimum Requirements

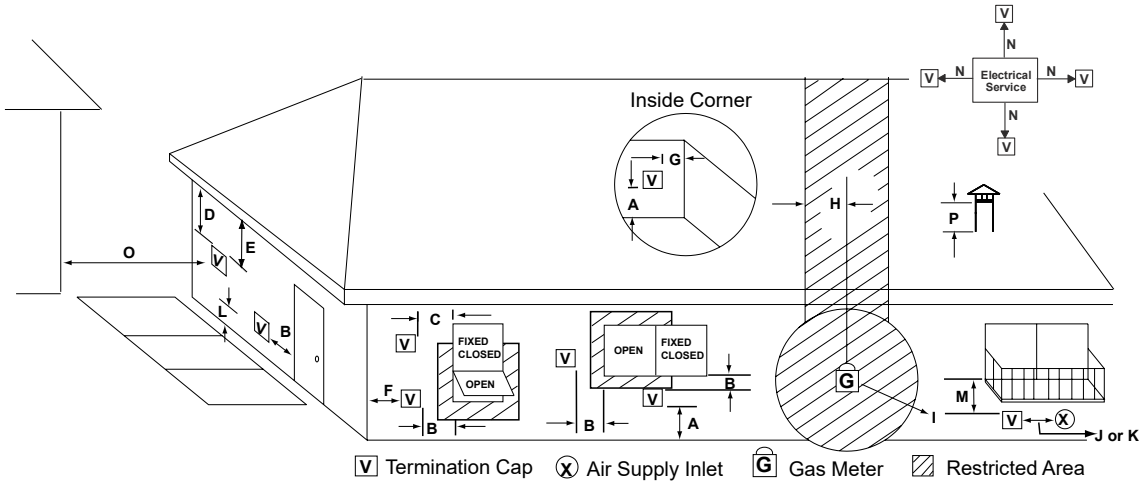

All minimum clearances are listed with an Outside Air Kit (OAK) installed, unless otherwise noted in table below.

A	12 in.	Above Finish Grade (the grade surface must be a non-combustible material
B	12 in. 48 in. no OAK	Open door or window: below or to the side
B	12 in.	Open door or window: above
C	6 in.	Permanently closed window: above, below or to the side
D	18 in. 36 in. no OAK	Vertical clearance to a ventilated soffit located above the terminal within a horizontal distance of 2 ft from the center-line of the terminal
E	12 in.	Clearance to unventilated soffit
F	12 in.	Clearance to outside corner
G	12 in.	Clearance to inside corner
H	36 in.	Above gas meter/regulator measured from horizontal center-line of regulator
I	36 in. USA 72 in. Canada	Clearance to service regulator vent outlet
J	12 in. 48 in. no OAK	Clearance to non-mechanical air supply inlet to the building or the combustions air inlet to any other appliance
K	10 ft horizontal 3 ft vertical	Clearance to mechanical air supply
L	7 ft.	Above paved sidewalk, paved driveway located on **public** property
M	12 in.	Under an open veranda, porch, deck or balcony
N	See Note below*	Electric service: above, below or to the side (location must not obstruct or interfere with access)
O	24 in.	Adjacent building, fences and protruding parts of the structure
P	12 in.	Clearance above roof line for vertical terminations

***NOTE:** Consult local building, fire officials or authorities having jurisdiction. Local codes or regulations may require different clearances.

24 in.	Above grass, top of plants, wood or any other combustible
12 in. 36 in. no OAK	Clearance from any forced air intake of other appliance
12 in.	Clearance horizontally from combustible wall
15 in.	Vented directly through a wall, minimum length of horizontal pipe
6 in. horizontal 12 in. vertical	Minimum horizontal or vertical terminations must protrude from wall

NOTICE: Termination must exhaust above air inlet elevation.

- It is recommended that at least 60 inches (1.52m) of vertical pipe be installed when appliance is vented directly through a wall. This will create a natural draft, which will help prevent the possibility of smoke or odor venting into the home during a power outage.
- It will also keep exhaust from causing a nuisance or hazard by exposing people or shrubs to high temperatures.
- The safest and preferred venting method is to extend the vent vertically through the roof or above the roof.

NOTICE: Do NOT Terminate Vent:

- In any location that will allow flue gases or soot from entering or staining the building.
- In any location which could create a nuisance or hazard.
- In any enclosed or semi-enclosed area such as a carport, garage, attic, crawl space, under a sun deck or porch, narrow walkway.
- Closely fenced area, or any location that can build up a concentration of fumes such as a stairwell, covered breezeway, etc.

B. Avoiding Smoke and Odors

Negative Pressure, Shut-Down and Electrical Power Failure

To reduce the probability of back-drafting or burn-back in the pellet appliance during power failure or shut down conditions, it must be able to draft naturally without exhaust blower operation.

Negative pressure in the house will resist this natural draft if not accounted for in the pellet appliance installation.

Heat rises in the house and leaks out at upper levels. This air must be replaced with cold air from outdoors which flows into lower levels of the house.

Vents and chimneys into basements and lower levels of the house can become the conduit for air supply and reverse under these conditions.

Outside Air

An outside air kit is recommended in all installations. The Outside Air Kit must be ordered separately.

Per national building codes, consideration must be given to combustion air supply to all combustion appliances. Failure to supply adequate combustion air for all appliance demands may lead to back-drafting of those and other appliances.

When the appliance is roof vented (strongly recommended):

The air intake is best located on the exterior wall oriented towards the prevailing wind direction during the heating season.

When the appliance is side-wall vented:

The air intake is best located on the same exterior wall as the exhaust vent outlet and located lower on the wall than the exhaust vent outlet.

The outside air supply kit can supply most of the demands of the pellet appliance, but consideration must be given to the total house demand.

House demand may consume the air needed for the appliance. It may be necessary to add additional ventilation to the space in which the pellet appliance is located.

Consult with your local HVAC professional to determine the ventilation demands for your house.

Vent Configurations

When installing a pellet appliance with a horizontal vent configuration the frequency of power outages should be considered:

- Power outages during operation will cause the appliance to immediately turn off and may create conditions where smoke will back draft into the house. In order to reduce the likelihood of smoke back drafting into the house during a power outage, Hearth and Home Technologies strongly suggests:
  - Installing the pellet venting with a minimum vertical run of 5 feet (1.52m).
  - Installing the outside air kit at least 4 feet (1.22m) below the vent termination.

To prevent soot damage to exterior walls of the house and to prevent re-entry of soot or ash into the house:

- Maintain specified clearances to windows, doors and air inlets, including air conditioners.
- Vents should not be placed below ventilated soffits. Run the vent above the roof.
- Avoid venting into alcove locations.
- Vents should not terminate under overhangs, decks or onto covered porches.
- Maintain minimum clearance of 12 inches (305mm) from the vent termination to the exterior wall. If you see deposits developing on the wall, you may need to extend this distance to accommodate your installation conditions.

CAUTION

- DO NOT CONNECT THIS Appliance TO A CHIMNEY FLUE SERVICING ANOTHER APPLIANCE.
- DO NOT CONNECT TO ANY AIR DISTRIBUTION DUCT OR SYSTEM.

Hearth & Home Technologies assumes no responsibility for, not does the warranty extend to, smoke damage caused by reverse drafting of pellet appliances under shut down or power failure conditions.

C. Negative Pressure

Negative pressure results from the imbalance of air available for the appliance to operate properly. It can be strongest in lower levels of the house.

Causes include:

- Exhaust fans (kitchen, bath, etc.)
- Range hoods
- Combustion air requirements for furnaces, water appliances and other combustion appliances
- Clothes dryers
- Location of return-air vents to furnace or air conditioning
- Imbalances of the HVAC air handling system
- Upper level air leaks such as:
  - Recessed lighting
  - Attic hatch
  - Duct leaks

To minimize the effects of negative air pressure:

- Install the outside air kit with the intake facing prevailing winds during the heating season
- Ensure adequate outdoor air for all combustion appliances and exhaust equipment
- Ensure furnace and air conditioning return vents are not located in the immediate vicinity of the appliance
- Avoid installing the appliance near doors, walkways or small isolated spaces
- Recessed lighting should be a “sealed can” design
- Attic hatches weather stripped or sealed
- Attic mounted duct work and air handler joints and seams taped or sealed

WARNING

Risk of Asphyxiation!
Negative pressure can cause spillage of combustion fumes and soot.

D. Draft

Draft is the pressure difference needed to vent an appliance successfully. When an appliance is drafting successfully, all combustion byproducts are exiting the home through the chimney.

Install through the warm airspace enclosed by the building envelope. This helps to produce more draft, especially during lighting and die-down of the fire.

Considerations for successful draft include:

- Preventing negative pressure
- Location of appliance and chimney

NOTICE: Hearth & Home Technologies assumes no responsibility for the improper performance of the chimney system caused by:

- Inadequate draft due to environmental conditions
- Down drafts
- Tight sealing construction of the structure
- Mechanical exhausting devices

E. Minimum Vacuum Requirements

.075 inches W.C.

F. Chimney and Exhaust Connection

1. **Chimney & Connector**: Use 3 or 4 inch (76-102mm) diameter type “L” or “PL” venting system. It can be vented vertically or horizontally.
2. **Mobile Home:** Approved for all Listed pellet vent. If using the 3 inch (76mm) vertical Top Vent Adapter Kit or the 3 to 6 inch (76-152mm) Top Vent Offset Adapter, use Listed double wall flue connector. A Quadra-Fire Outside Air Kit must be used with manufactured home installations.
3. **Residential:** The 3 inch (76mm) vertical Top Vent Adapter Kit and the 3 to 6 inch (76-152mm) Top Vent Offset Adapter are tested to use 24 gauge single wall flue connector or Listed double wall flue connector to Class A Listed metal chimneys, or masonry chimneys meeting International Residential Code standards for solid fuel appliances.
4. **INSTALL VENT AT CLEARANCES SPECIFIED BY THE VENT MANUFACTURER.**
5. Seal exhaust venting system to the unit with High Temp 500ºF RTV silicone sealant. Secure the venting system to the unit with at least (3) screws. All pellet vent pipe must be secured together either by means provided by the pipe manufacturer or by (3) screws at each joint.
6. DO NOT INSTALL A FLUE DAMPER IN THE EXHAUST VENTING SYSTEM OF THIS Appliance.
7. DO NOT CONNECT THIS Appliance TO A CHIMNEY FLUE SERVING ANOTHER APPLIANCE.

NOTE: Follow venting manufacturers recommendations for sealing pipe joints.

G. Equivalent Feet of Pipe

The table below can help you calculate the equivalent feet of pipe which is a method used to determine pellet vent size **(Figure 17.1)**.

CAUTION



Vent surfaces get HOT, can cause burns if touched. Non-combustible shielding or guards may be required.

Example of 3 Elbow-Rear Vent Termination Calculation

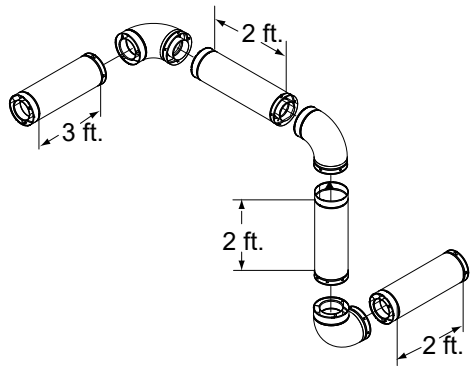

Figure 17.1

Pellet Venting Component	# of Elbows	Feet of Pipe	Multiplied By	Equivalent Feet	Components Equivalent Feet
90° Elbow or Tee	3		X	5	15
45° Elbow			X	3	
Horizontal Pipe		7	X	1	7
Vertical Pipe		2	X	0.5	1
				Total Equivalent Feet	23

Table 17.1

NOTE: This is a generic example and is not intended to represent any specific fuel type.

H. Pipe Selection Chart

The chart will help you in determining proper venting size according to the equivalent feet of pipe calculated previously and the altitude above sea level of this installation **(Figure 17.2)**.

1. Locate the calculated equivalent feet of pipe on the vertical left side of the chart.
2. Move to the right horizontally on the chart until you reach your altitude above sea level.
3. If you fall below the diagonal line, 3 or 4 inch (76 to 102mm) pipe may be used.
4. If it is anywhere above the diagonal line, a 4 inch (102mm) diameter pipe is required.

NOTICE:
- A 90° elbow is 5 times as restrictive to the flow of exhaust gases under positive pressure as 1 foot (305mm) of horizontal pipe.
- A foot of horizontal pipe is twice as restrictive as a foot of vertical pipe.

WARNING



Risk of Fire!
- Only LISTED venting components may be used.
- NO OTHER vent components may be used.
- Substitute or damaged vent components may impair safe operation.

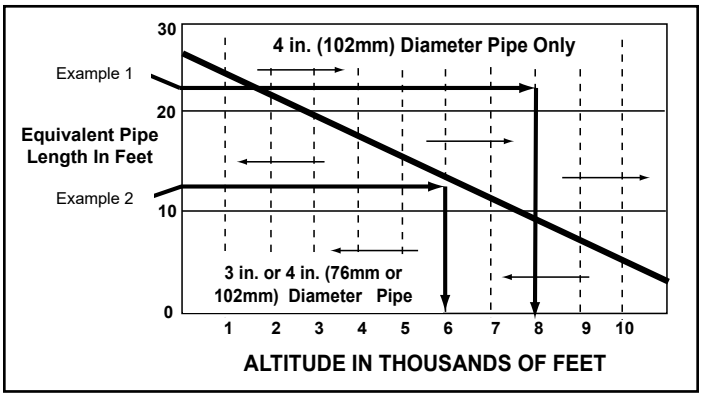

Figure 17.2

- **Example 1**: If the equivalent length of pipe is 23 feet (7m) with altitude of 8,000 feet (2438m) you must use 4 inch (102mm) diameter type “L” or “PL” vent.
- **Example 2**: If the equivalent length of pipe is 12 feet (3.7m) with altitude of 6,000 feet (1829m) you may use 3 or 4 inch (76 to 102mm) diameter type “L” or “PL” vent.

WARNING



Risk of Injury or Property Damage.
- Improper installation, adjustment, alteration, service or maintenance can cause injury or property damage.
- Refer to the owner’s information manual provided with this appliance.
- For assistance or additional information consult a qualified installer, service agency or your dealer.

5 Venting Systems

A. Through The Wall

Horizontal termination cap must be a minimum of 6 inches. (152mm) from the wall. Approved for mobile home installations. Must use 3 or 4 inch (76-102mm) “L” or “PL” listed pellet venting or Listed double wall pipe and an authorized Outside Air Kit in mobile homes.

NOTICE: Please note that while the minimum clearance for the termination cap is 6 inches (152mm) there is the possibility of soot build-up around the termination area. If this occurs we suggest to move the termination further away from the house to prevent it.

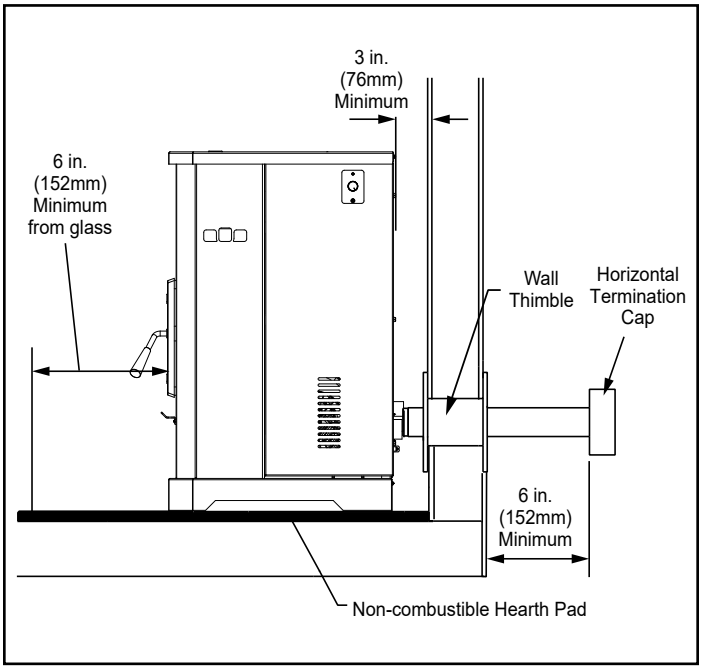

Figure 18.1 - Straight Out

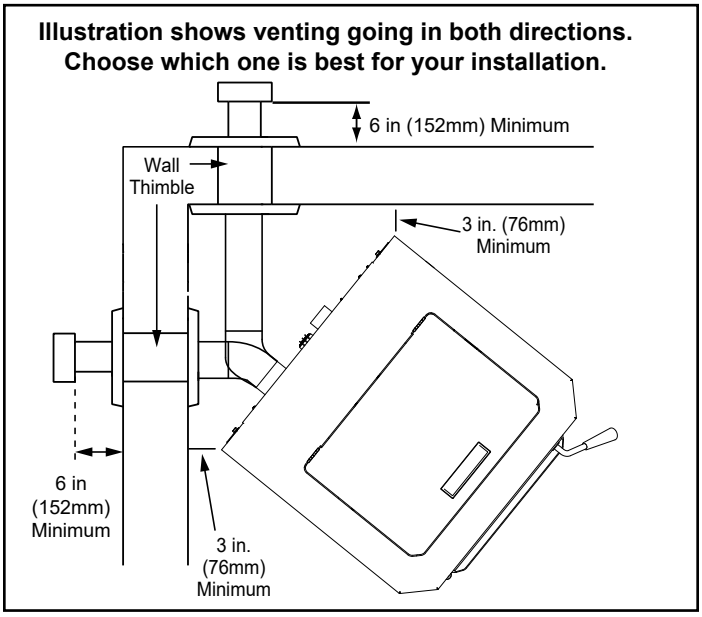

Figure 18.2 - 45 Degree

NOTE: In Canada, where passage through a wall or partition of combustible construction is desired, the installation shall conform to **CAN/CSA-B365**

CAUTION

We strongly recommend that you DO NOT DOWNWARD VENT.
The following may occur:

- The appliance will not vent properly
- Smoke spillage in the house
- Excessive sooting

B. Vertical into Existing Class A Chimney

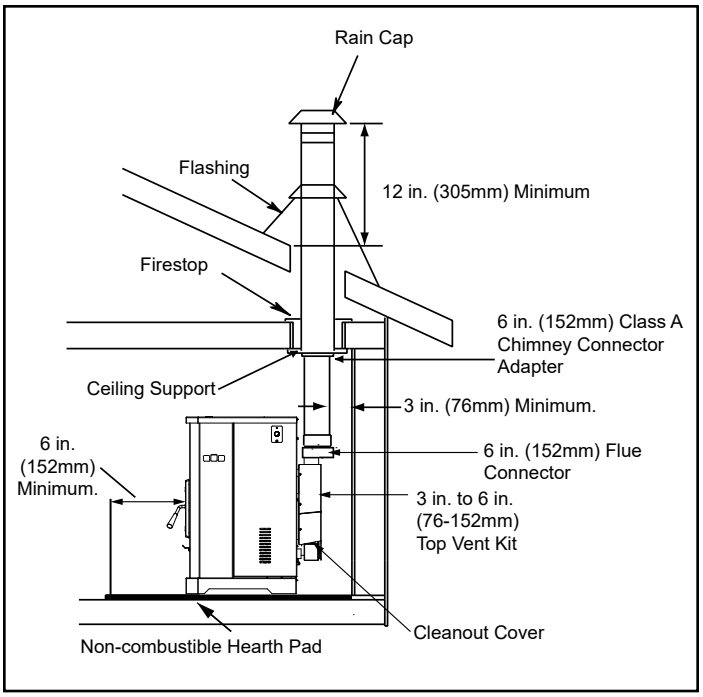

Figure 19.1

We strongly recommend a minimum of 60 inches (1.5m) vertical, however above the eve is preferred.

Both installations are approved for mobile home installations. Must use 3 or 4 inch (76 to 102mm) “L” or “PL” Listed pellet venting or Listed double wall pipe and authorized Outside Air Kit in mobile homes. Single wall pipe is approved for residential installations only.

Air Clearance to Pipe:

This appliance was tested with standard 3 inch (76mm) Listed pellet vent.

Pellet pipe manufactures Listed reduce clearance pipe may be use for reduce clearance from 3 inch (76mm) air clearance to no less than 1 inch (25mm) air clearance to combustibles for approved Listed pellet pipe.

Follow pipe manufactures listed air clearances to combustibles and installation instructions for all reduced air clearances installations.

NOTE: In Canada, where passage through a wall or partition of combustible construction is desired, the installation shall conform to **CAN/CSA-B365**

C. Vertical - Interior - Typical Installation

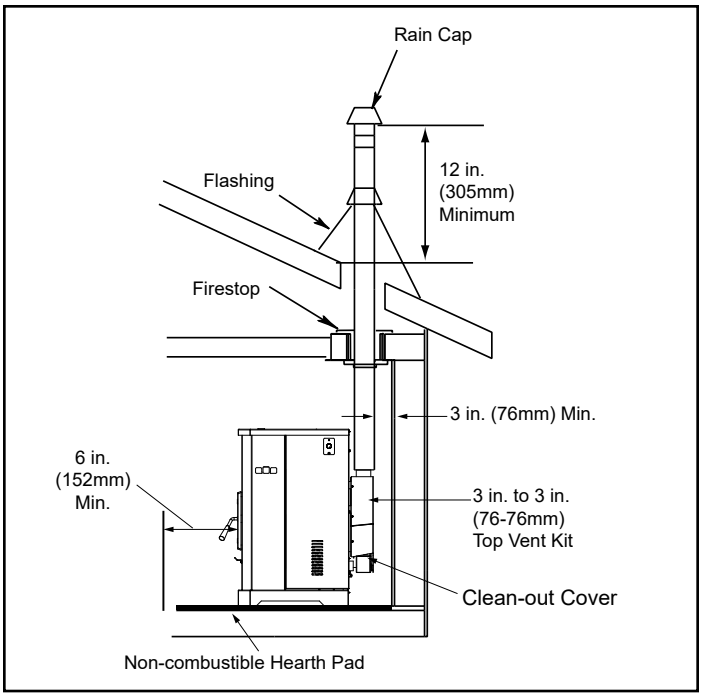

Figure 19.2 - Preferred Method #1

D. Through The Wall & Vertical - External

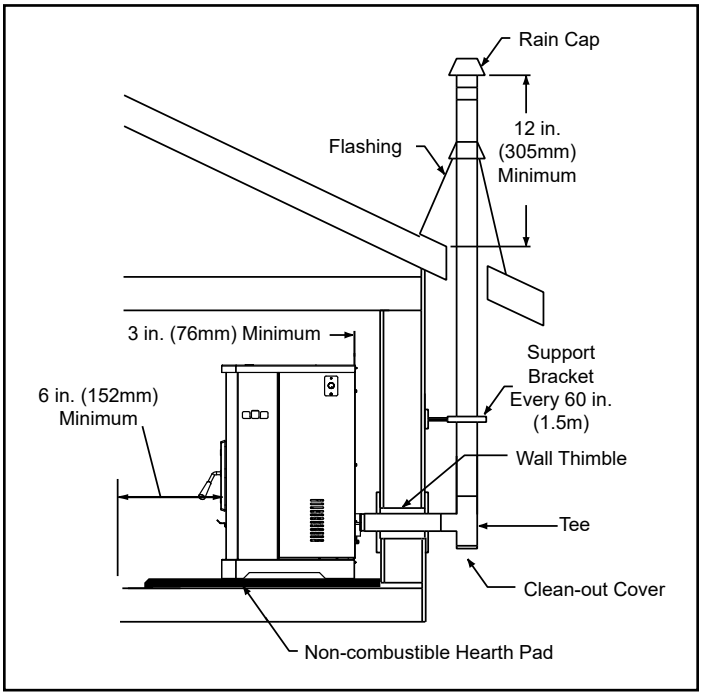

Figure 19.3 - Preferred Method #2

WARNING

Fire Risk

Inspection of Chimney:

- Masonry chimney must be in good condition.
- Meets minimum standard of **NFPA 211**
- Factory-built chimney must be a minimum 6 inch (152mm) UL103 HT.

E. Masonry

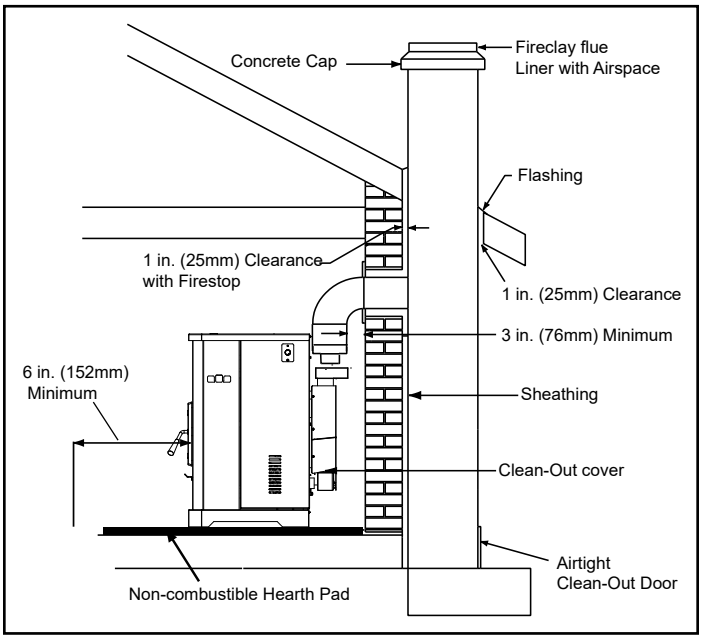

Figure 20.1

F. Alternate Masonry

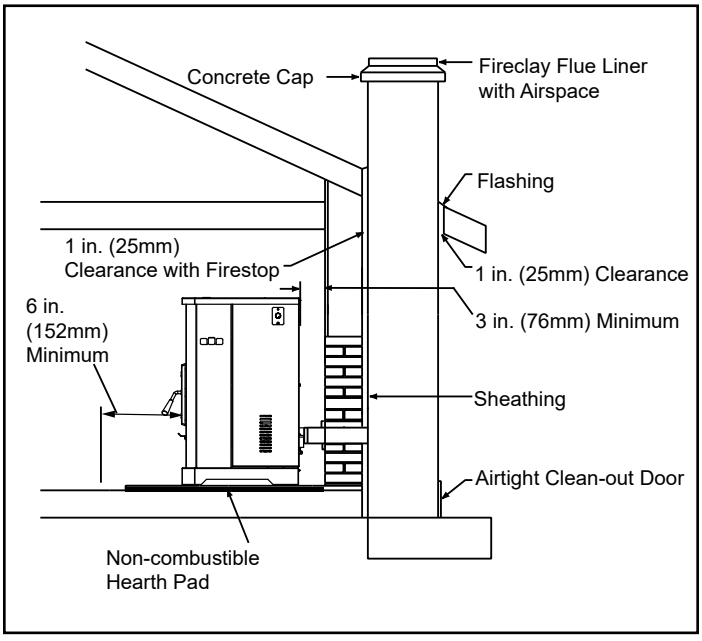

Figure 20.2

6 Appliance Set-Up

A. Outside Air Kit (included)

For optimal performance, Quadra-Fire recommends the outside air kit for all installations. Outside air kit is required for all mobile/manufactured home installations.

Install through wall

- Maintain clearances from exhaust
  - Attach flex pipe to outside air connection on Stove
  - Use hose clamp
  - Route tube outside the structure
  - Attach cap
  - Secure to outside wall with appropriate fasteners

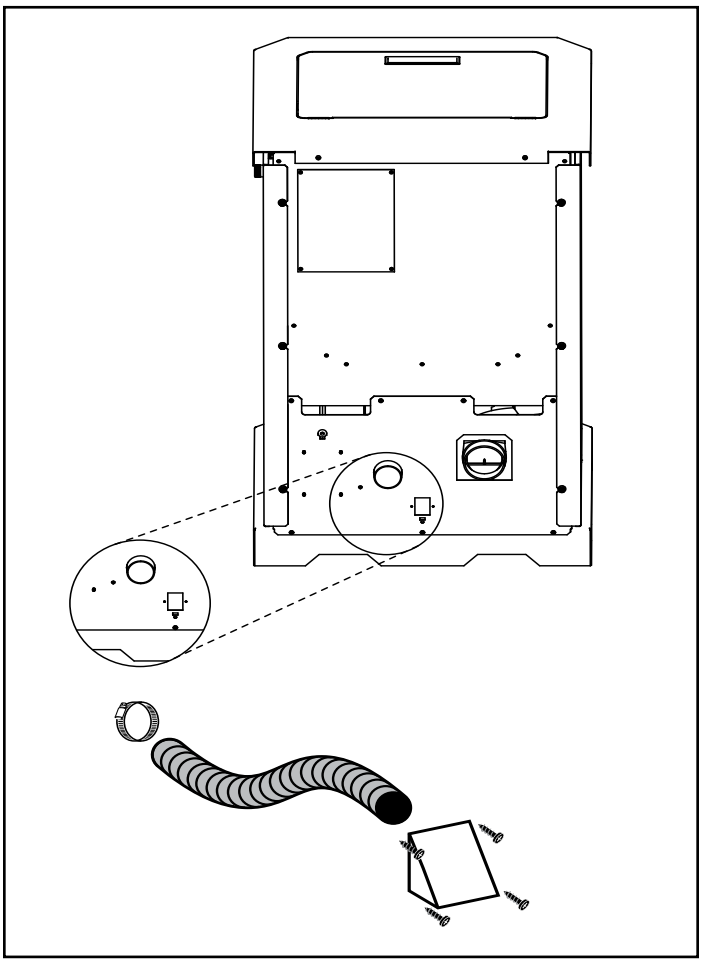

Figure 21.1

CAUTION

Never draw outside combustion air from:

- Wall, floor or ceiling cavity
- Enclosed space such as an attic or garage

B. Top Vent Adapter Installation

3 to 3 inch Top Vent Adapter

3 to 6 inch Top Vent Offset Adapter

1. Put a layer of high temperature silicone on the 3 inch (76mm) exhaust outlet. Do not put silicone inside of pipe **(Figure 22.1)**.
2. Slide the top vent adapter onto the rear exhaust outlet and adjust the assembly to a vertical position **(Figure 22.1)**.
3. Install the 4 mounting screws.
4. Drill 2 holes with #26 drill bit through the rear exhaust outlet using the 2 holes already in the short horizontal pipe in the top vent adapter as a guide. Install the 2 screws **(Figure 22.1)**.
5. Install the vent pipe into the top vent adapter.
6. To clean the top vent adapter open the clean-out cover **(Figure 22.1)**.

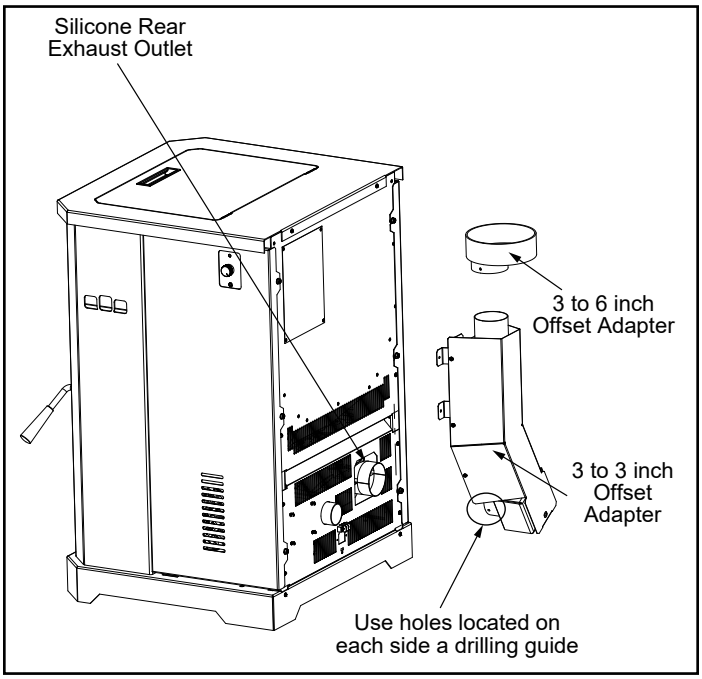

Figure 22.1

C. Rear Vent Adapter Installations

1. Put a layer of high temperature silicone on the 3 inch (76mm) exhaust outlet. Do not put silicone inside of pipe **(Figure 22.1)**.
2. Slide the adapter onto the rear exhaust outlet and adjust the assembly to the appropriate position.
3. Install the vent pipe into the adapter.

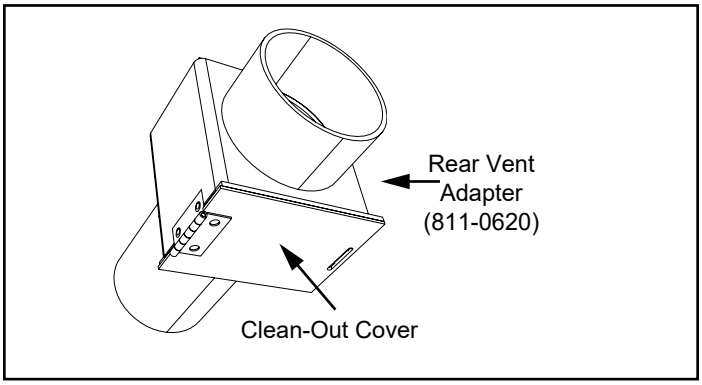

Figure 22.2 - Rear Vent Adapter (811-0620)

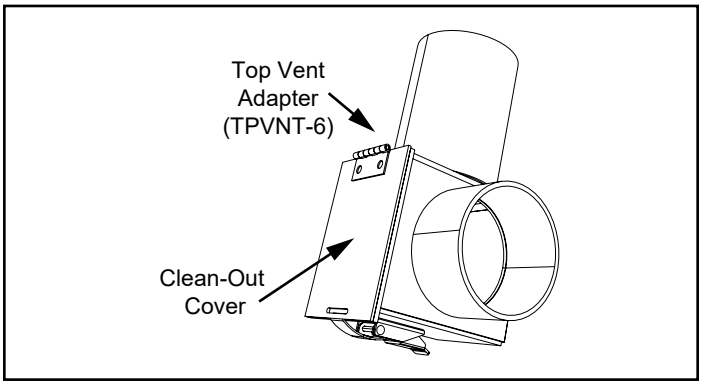

Figure 22.3 - 90° Rear to Top Vent Adapter (TPVNT-6)

D. Thermostat Installation and Operation

The kit comes with a programmable wall thermostat and 25' of thermostat wire. If you need to run more than 25' make sure you use a continuous strand of 18 to 22 gauge thermostat wire. For optimum performance your thermostat should be:

- Mounted on an inside wall, approximately 5' above the floor
- Do not locate where there is poor air circulation such as in a corner, alcove, behind doors, bookcase or other objects
- Located away from drafts, direct sunlight, above a lamp, television, radiator, a wall next to a window, or direct heat from the appliance
- Avoid damp environments as this can lead to corrosion that may shorten thermostat life
- If painting or construction work around, cover the thermostat completely or wait until work is complete before installation.

CAUTION

Shock hazard.

- Do NOT remove grounding prong from plug.
- Plug directly into properly grounded 3 prong receptacle.
- Route cord away from appliance.
- Do NOT route cord under or in front of appliance.

1. Separate the body of the thermostat from the mounting plate by gently pulling the two pieces apart **(Figure 23.1)**

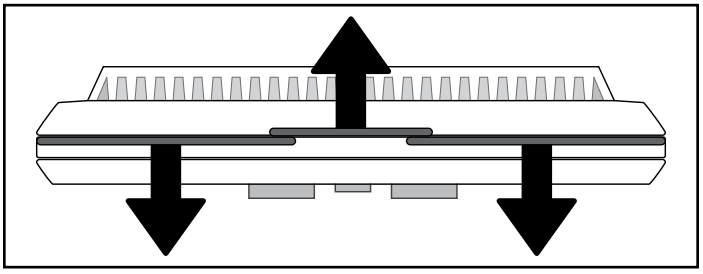

Figure 23.1

2. Use a drill with either a 3/16 drill bit for drywall or a 7/32 drill bit for plaster drill holes.
3. Using a hammer tap in wall anchors.
4. Route the wires through the opening in the base plate, and hold the base against the wall while aligning up to the holes. Attach base plate using a Phillips head screwdriver and two screws.
5. Connect your thermostat wire to the W and R terminals **(Figure 23.2)**.

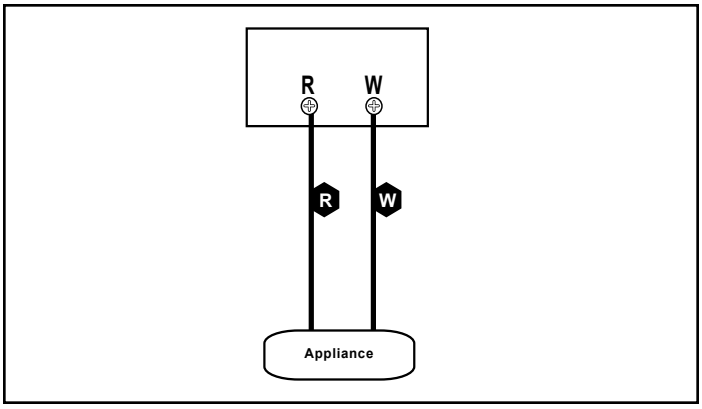

Figure 23.2

NOTE: Ensure bare wire ends are held ALL the way into the terminal block while the screws are being tightened.

6. There are two **AA ALKALINE ONLY** batteries already installed into the thermostat; to activate, remove black plastic tab that is located inside the battery compartment.

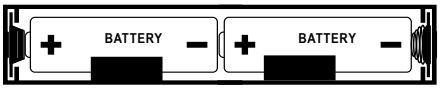

Figure 23.3

7. Snap the thermostat to the base plate.

There is a 4 screw terminal block located on the back lower left corner of the appliance directly above the power cord inlet. The center 2 screws are for the thermostat wires.

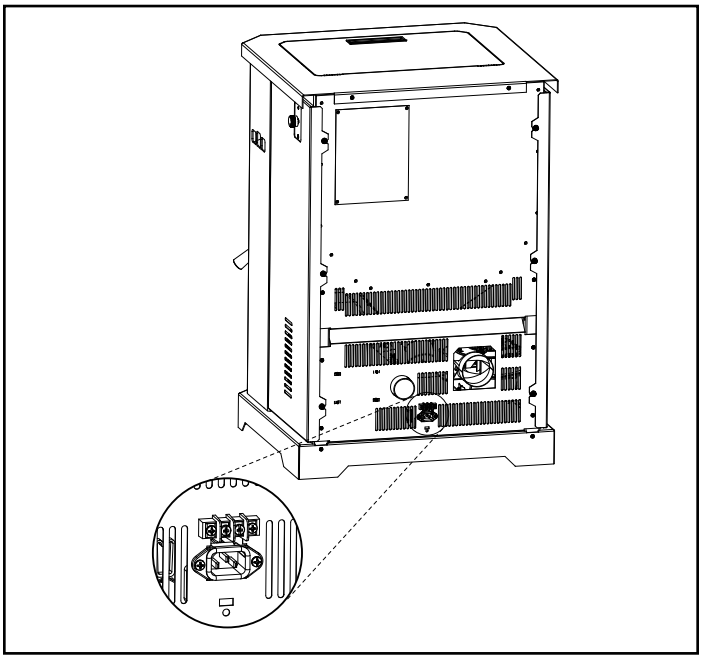

Figure 23.2

7 Mobile Home Installation

You must use a Quadra-Fire Outside Air Kit for installation in a mobile home.

1. An outside air inlet must be provided for the combustion air and must remain clear of leaves, debris, ice and/or snow. It must be unrestricted while the appliance is in use to prevent room air starvation which causes smoke spillage. Smoke spillage can also set off smoke alarms.
2. The combustion air duct system must be made of metal. It must permit zero clearance to combustible construction and prevent material from dropping into the inlet or into the area beneath the dwelling and contain a rodent screen.
3. The appliance must be secured to the mobile home structure by bolting it to the floor (using lag bolts). Use the same holes that secured the appliance to the shipping pallet.
4. The appliance must be grounded with #8 solid copper grounding wire or equivalent, terminated at each end with an NEC approved grounding device.
5. Refer to Clearances to Combustibles and floor protection requirements on page 12 for listings to combustibles and appropriate chimney systems.
6. Use silicone to create an effective vapor barrier at the location where the chimney or other component penetrates to the exterior of the structure.
7. Follow the chimney manufacturer's instructions when installing the vent system for use in a mobile home.
8. Installation shall be in accordance with the **Manufacturers Home & Safety Standard (HUD) CFR 3280, Part 24**.

WARNING

Products of combustion generate carbon monoxide and different fuels generate different levels.

Carbon monoxide:

- Only use approved fuels in this appliance.
- Always keep door shut during operation. Operating this appliance with doors open can allow CO to leak into the home.

CO can kill you before you are aware it is in your home. At lower levels of exposure, CO causes mild effects that are often mistaken for the flu. These symptoms include headaches, dizziness, disorientation, nausea and fatigue. The effects of CO exposure can vary greatly from person to person depending on age, overall health and the concentration and length of exposure.

CAUTION

THE STRUCTURAL INTEGRITY OF THE MOBILE HOME FLOOR, WALL AND CEILING/ROOF MUST BE MAINTAINED

Do NOT cut through:

- Floor joist, wall, studs or ceiling trusses.
- Any supporting material that would affect the structural integrity.

This appliance is to be connected to a factory-built chimney conforming to **CAN/ULC-S629, Standard for 650°C Factory-Built Chimneys**.

For removal of the chimney for mobile home transportation, contact the proper transportation officials.

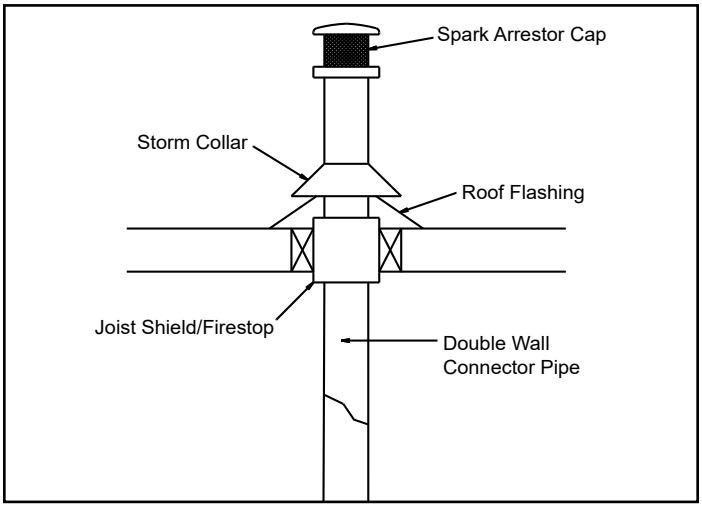

Figure 24.1

CAUTION

Never draw outside combustion air from:

- Wall, floor or ceiling cavity
- Enclosed space such as an attic or garage

WARNING

It is critical to have a working smoke detector installed in the home of appliance operation.

- Smoke alarms that are properly installed and maintained play a vital role in reducing fire deaths and injuries. Having a working smoke alarm reduces the chance of fire related injuries.

WARNING

NEVER INSTALL IN A SLEEPING ROOM.

8 Reference Materials

A. Service & Maintenance Log

Date of Service	Performed By	Description of Service

QUADRA-FIRE®

NOTHING BURNS LIKE A QUAD

CONTACT INFORMATION

Hearth & Home Technologies
352 Mountain House Road
Halifax, PA 17032
Division of HNI INDUSTRIES

**Please contact your Quadra-Fire dealer with any questions or concerns.
For the number of your nearest Quadra-Fire dealer
log onto www.quadrafire.com**

CAUTION



DO NOT DISCARD THIS MANUAL

- Important operating and maintenance instructions included.
- Read, understand and follow these instructions for safe installation and operation.
- Leave this manual with party responsible for use and operation of this appliance.



We recommend that you record the following pertinent information for your heating appliance.

Date purchased/installed:	
Serial Number:	Location on appliance:
Dealership purchased from:	Dealer Phone: 1( ) -
Notes:	

This product may be covered by one or more of the following patents: (United States) 5341794, 5263471, 6688302, 7216645, 7047962 or other U.S. and foreign patents pending.

HEARTH&HOME technologies™

Appendix A

Revision History

Date	Project No.	Tech. & Evaluator	Report Sect.	Summary of Changes
June 2018	0135PS041E	Bruce Davis	All	Original Report Generated
August 17, 2021	0135PS041E.REV001 Edition (000)	Bruce Davis	Preface	Cover, signatories, and table of content updated to add new models and edition number.
			1	Introduction updated by adding additional appliances statement. Sampling procedure updated by adding B415 example calculation statement. Summary of results updated by adding negative filter explanation and valid and appropriate statement.
			2	Model similarities added to page 13.
			3	Precision data added to page 30.
			5	Label added for model Outfitter-II and PP 150 on page 80, and 81. Manual for model PP 150 added to page 122. Manual for model Outfitter-II added to page 146.
			Appendix A	Revision History added to report.
September 7, 2021	0135PS041E.REV001 Edition (001)	Bruce Davis	3	Test instructions on page 21 and conditioning data on page 23 updated for clarity
			5	Updated PP130-B label on page 78, previous version stated not for sale after 2015.
September 7, 2022	0135PS041E.REV001 Edition (002)	Riley Tiegs Ken Morgan	3	Dilution Tunnel Schematic Added pg 22.