Hearth & Home Technologies

Project # 24-253
Brand(s): Quadra Fire, Heat & Glo, Heatilator, Majestic
Model(s): Pioneer-III-ARC, Pioneer-III-REC
Type: Single Burn Rate Factory Built Fireplace
March 26, 2024
Revised: May 24, 2024

ASTM E2780 Standard Test Method for Determining Particulate Matter Emissions from Wood Heaters
EPA Test Method 28R for Certification and Auditing of Wood Heaters

Contact: Colin McCormick
1915 West Saunders Street
Mt Pleasant IA, 52641
mccormickcj@hearthnhome.com
509-690-1000

Prepared by: Sebastian Button, Laboratory Supervisor

11785 SE Highway 212 – Suite 305
Clackamas, OR 97015-9050
(503) 650-0088
WWW.PFSTECO.COM

Revision Summary

Date: 3/26/2024– Original Issue

Revised: May 24, 2024

- Updated model name(s) per client request. Updated labels & manual with new names and revised Certificate of Conformity.

Contents

Affidavit 3
Introduction 4
Notes 4
Wood Heater Identification and Testing 5
Test Procedures and Equipment 6
Results 7
Summary Table 7
Test Run Narrative 8
Run 1 8
Run 2 8
Test Conditions Summary 8
Appliance Operation and Test Settings 9
Settings & Run Notes 9
Appliance Description 10
Test Fuel Properties 14
Sampling Locations and Descriptions 15
Sampling Methods 16
Analytical Methods Description 16
Calibration, Quality Control and Assurances 16
Appliance Sealing and Storage 16
Sealing Label 16
Sealed Unit 17
List of Appendices 18

Affidavit

PFS-TECO was contracted by Hearth & Home Technologies (HHT) to provide testing services for the Pioneer-III-ARC & REC Single Burn Rate Factory Built Fireplace per EPA Method 28R, *Certification and Auditing of Wood Heaters*. All testing and associated procedures were conducted at PFS-TECO's Portland Laboratory beginning on 2/6/2024 and ending on 2/7/2024. PFS-TECO's Portland Laboratory is located at 11785 SE Highway 212 – Suite 305, Clackamas, Oregon 97015. Testing procedures followed EPA Method 28R and ASTM E2780, *Standard Test Method for Determining Particulate Matter Emissions from Wood Heaters*. Particulate sampling was performed per ASTM E2515, *Standard Test Method for Determination of Particulate Matter Emissions Collected by a Dilution Tunnel*.

PFS-TECO is accredited by the U.S. Environmental Protection Agency for the certification and auditing of wood heaters pursuant to subpart AAA of 40 CFR Part 60, New Source Performance Standards for Residential Wood Heaters and subpart QQQQ of 40 CFR Part 60, Standards of Performance for New Hydronic Heaters and Forced Air Furnaces, Methods 28R, 28WHH, 28 WHH-PTS, and all methods listed in Sections 60.534 and 60.5476. PFS-TECO holds EPA Accreditation Certificate Numbers 4 and 4M (mobile). PFS-TECO is accredited by IAS to ISO 17020:2012 "Criteria for Bodies Performing Inspections", and ISO 17025:2017 "Requirements for Testing Laboratories." PFS-TECO is also accredited by Standards Council of Canada to ISO 17065:2012 "Requirements for Bodies Operating Product Certification Systems."

The following people were associated with the testing, analysis and report writing associated with this project.

Sebastian Button, Laboratory Supervisor

Introduction

HHT contracted with PFS-TECO to perform EPA certification testing on the Pioneer-III-ARC & REC Single Burn Rate Factory Built Fireplace. All testing was performed at PFS-TECO's Portland Laboratory. All testing was performed by Sebastian Button.

Notes

- Prior to start of testing, 50 hours of conditioning was performed by the manufacturer at a medium burn setting in accordance with ASTM E2780.
- Prior to start of testing, the dilution tunnel was cleaned with a steel brush.
- A separate, independent, third filter train was utilized to determine 1st hour emissions for all test runs.
- A total of 2 test runs were completed on this single burn rate appliance. The burn rate from each test agrees within 10% of the average, meeting the requirements of a single burn rate appliance. All runs have been found to be appropriate, no anomalies occurred. See the Run Narrative section for further detail on each run.
- For both test runs, the fuel length was slightly shorter than the nominal 5/6 of the longest firebox dimension. At nominal length (23.25") the fuel load density exceeded the 7.7 lb/ft^3 limit for fuel weight. For each test, the fuel loads were incrementally shortened until the total load weight was just within the allowed weight range at 21.75" and 22" for test run 1 and 2, respectively.
- This unit was originally intended to be tested as a multi-burn rate appliance for use with a thermostat to control heat demand. Testing described in this report was performed with the thermostat not calling for heat for the duration of both test cycles. With the unit failing to burn slowly enough to meet the criteria for a category 2 burn rate of less than 1.0 kg/hr, the manufacturer elected to produce and market this unit as a single burn rate appliance. If the unit is operated without a thermostat connected, it will operate in an identical manner as the conditions under which tests were performed. This was discussed and approved by EPA staff at both OAQPS and OECA at the time testing occurred.

Wood Heater Identification and Testing

- Appliance Tested: ***Pioneer-III-ARC & REC***
- PFS Tracking Number: ***180***
- *Manufacturer:* ***Hearth And Home Technologies***
- Catalyst: ***No***
- Heat exchange blower: ***Integral***
- Type: ***Wood Stove***
- Style: ***Built-In Single Burn Rate Wood Stove***
- Date Received: ***Friday, February 02, 2024***
- Testing Period – Start: ***Tuesday, February 06, 2024***
  Finish: ***Wednesday, February 07, 2024***
- Test Location: ***PFS TECO***
  11785 SE Hwy 212
  Clackamas, OR 97015
- Elevation: ***~131 Feet above sea level***
- Test Technician(s): Sebastian Button
- Observers: ***Colin McCormick of HHT***

Test Procedures and Equipment

All Sampling and analytical procedures were performed by Sebastian Button. All procedures used are directly from ASTM E2780 and ASTM E2515. See the list below for equipment used. See Appendix C submitted with this report for calibration data.

Equipment List:

Equipment ID#	Equipment Description
50	Digiweigh DWP12i Platform Scale
53	APEX XC-60-ED Digital Emissions Sampling Box A
54	APEX XC-60-ED Digital Emissions Sampling Box B
203	APEX XC-50-DIR Digital Emissions Sampling Box C
55	Apex Ambient Air Sample Box
57	California Analytical ZRE CO2/CO/O2 IR ANALYZER
94	Moisture meter calibration block
95	Anemometer
97	10 lb audit weight
107	Sartorius Analytical Balance
109A/B	Troemner 100mg/200mg Audit Weights
111	Dwyer 1430 Microtector
115	Delmhorst Wood Moisture Meter
189	Mettler 3'x3' floor scale w/digital weight indicator
207	Dewalt Tape Measure
208	Digital Calipers
215	Temperature Logger
CC505834	Gas Analyzer Calibration Span Gas
CC139173	Gas Analyzer Calibration Mid Gas

Barometric Pressure data was taken from a local National Weather Service station, corrected for altitude differences in accordance with ASTM E2515 6.1.2.

Results

A total of 2 test runs were performed on the Pioneer-III-ARC & REC. The average emissions rate for the 2 run test series was measured to be **1.3 g/hr** with a Higher Heating Value efficiency of **68%.** The average CO emission rate for the 2 tests was **2.0 g/min.** The HHT Pioneer-III-ARC & REC meets the 2020 cribwood PM emission standard of ≤ 2.0 g/hr per CFR 40 part 60, §60.532 (b).

Detailed individual run data can be found in Appendix A submitted with this report.

Summary Table

Date	2/6/2024	2/7/2024
Run Number	1	2
Emission Rate (g/hr)	1.14	1.53
Burn Rate (kg/hr)	1.45	1.41
Heat Output (Btu/hr)	18,341	17,665
Overall Efficiency (% HHV)	68%	67%
CO Emissions (g/MJ Output)	5.92	7.02
CO Emissions (g/kg Dry Fuel)	79.78	93.78
CO Emissions (g/min)	1.91	2.18
Emissions – 1st hr (g/hr)	10.48	14.20
Particulate emission average of 2 test runs: 1.3 grams per hour.		
Average HHV efficiency of 2 test runs: 68%.		
Average CO Emissions Rate: 2.0 g/min		

Test Run Narrative

Run 1

Run 1 was performed on 2/6/2024 as a single burn rate appliance, per EPA Method 28R. The total test time was 479 minutes. The particulate emissions rate for the test was 1.14 g/hr, the burn rate was 1.45 kg/hr with an HHV efficiency of 68%. The difference in average surface temperature between the beginning and end of the test exceeded 126°F, however, the alternative wood heater equilibrium requirements specified in section 10.3 of ASTM E2780 were met, so the test run is still considered valid. All test results were appropriate and valid. There were no anomalies and all test criteria were met.

Run 2

Run 2 was performed on 2/7/2024 as a single burn rate appliance, per EPA Method 28R. The total test time was 492 minutes. The particulate emissions rate for the test was 1.53 g/hr, the burn rate was 1.41 kg/hr with an HHV efficiency of 67.4%. The difference in average surface temperature between the beginning and end of the test exceeded 126°F, however, the alternative wood heater equilibrium requirements specified in section 10.3 of ASTM E2780 were met, so the test run is still considered valid. All test results were appropriate and valid. There were no anomalies and all test criteria were met.

Test Conditions Summary

Testing conditions for all runs fell within allowable specifications of the ASTM 2780 and ASTM E2515. A summary of facility conditions, fuel burned, and run times is listed below.

Run	Ambient (°F)		Relative Humidity (%)		Average Barometric Pressure (In. Hg.)	Preburn Fuel Weight (lbs)	Test Fuel Weight (lbs)	Test Fuel Moisture (%DB)	Test Run Time (Min)
	Pre	Post	Pre	Post					
1	72	67.1	32.2	35.6	29.63	20.47	31.02	22.9	479
2	70	64.9	30.0	33.6	29.67	26.54	31.04	23.2	492

Appliance Operation and Test Settings

The appliance was operated according to procedures as described in the Operations Manual, found in Appendix B submitted with this report. Detailed run information can be found in Appendix A submitted with this report.

Settings & Run Notes

	Pre-Burn Air Setting	Test Run Air and Fan Settings
Run 1	N/A – Single burn rate appliance has no air control, integral fan automatically controlled	N/A – Single burn rate appliance has no air control, integral fan automatically controlled
Run 2	N/A – Single burn rate appliance has no air control, integral fan automatically controlled	N/A – Single burn rate appliance has no air control, integral fan automatically controlled

Appliance Description

Model(s): Pioneer-III-ARC & REC

Appliance Type: Single Burn Rate Factory Built Fireplace

Total/Usable Firebox Volume: 4.06 ft^3, the total firebox volume and usable firebox volume are the same for this appliance.

Additional Branding: These models are also offered under different branding names: Quadra-Fire, Heat & Glo, Heatilator, & Majestic. All models are identical, differing only in branding designations.

Air Introduction System: The Pioneer-III-ARC & REC features automatically controlled combustion air with no user adjustable controls. Air travels from the intake to a variety of primary and secondary combustion air ports within the firebox. Primary air enters through an air wash above the loading door and a pilot air port at the lower front of the firebox. Secondary air enters through three secondary tubes located at the top of the firebox under the baffle and through ports adjacent to the air wash directed over the top of the baffle. After travelling around the baffle, combustion products exit the firebox through an 8” flue collar located at the top of the unit. Air entering through the intake, is automatically metered based on thermocouple temperatures located in the unit. Dimensions on all these features can be found in Appendix D.

Baffles: A 0.5” C-cast baffle plate rests on top of the secondary tubes and is insulated on top by a 1” thick superwool blanket.

Catalytic Combustor: N/A

Refractory Insulation: The firebox is lined with 1.25” thick high-density firebrick.

Flue Outlet: 8-inch exhaust outlet located on the top of the appliance.

Fan: An integral variable speed convection fan is mounted to the bottom of the appliance.

Appliance design drawings can be found in Appendix D submitted with the CBI copy of this report.

Firebox Volume Dimension

Total Firebox Volume = Usable Firebox Volume

PFS·TECO

An Employee-Owned Company • PFS Corporation d/b/a PFS TECO

PROJECT: 24-253 Pioneer III DATE:

Front View

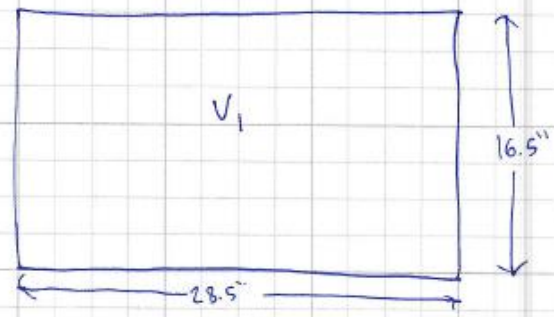

Side View

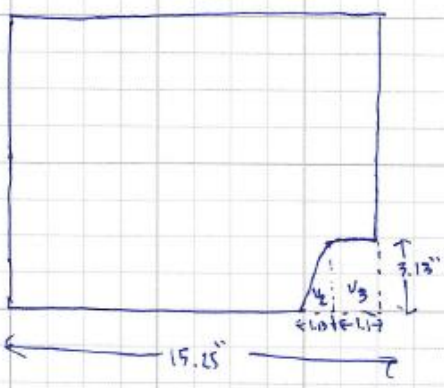

5/6 fuel length
⇒ 23.75"

$V_1 = 28.5'' \times 16.5'' \times 15.25'' \Rightarrow 7171.3\ in^3 \Rightarrow 4.15\ ft^3$

$V_2 = \frac{1}{2}[1.13'' \times 3.13'' \times 28.5''] \Rightarrow 50.4\ in^3 \Rightarrow 0.029\ ft^3$

$V_3 = 3.13'' \times 1.1'' \times 28.5'' \Rightarrow 98.1\ in^3 \Rightarrow 0.056\ ft^3$

$V_1 - V_2 - V_3 \Rightarrow \boxed{4.06\ ft^3}$

CORPORATE OFFICE: 1507 Matt Pass • Cottage Grove, WI 53527 • 608.839.1013 • www.PFSTECO.com

PFS TECO TESTED

MARKS YOU CAN BUILD ON

Appliance Front

Appliance Left

Appliance Right

Appliance Rear

Test Fuel Properties

Test fuel used was Douglas Fir dimensional lumber, air-dried to the specified moisture content range. A typical fuel load is pictured below:

Typical Fuel Load

Sampling Locations and Descriptions

Sample ports are located 14 feet downstream from any disturbances and 2 feet upstream from any disturbances. Flow rate traverse data was collected 12 feet downstream from any disturbances and 4 feet upstream from any disturbances. (See below).

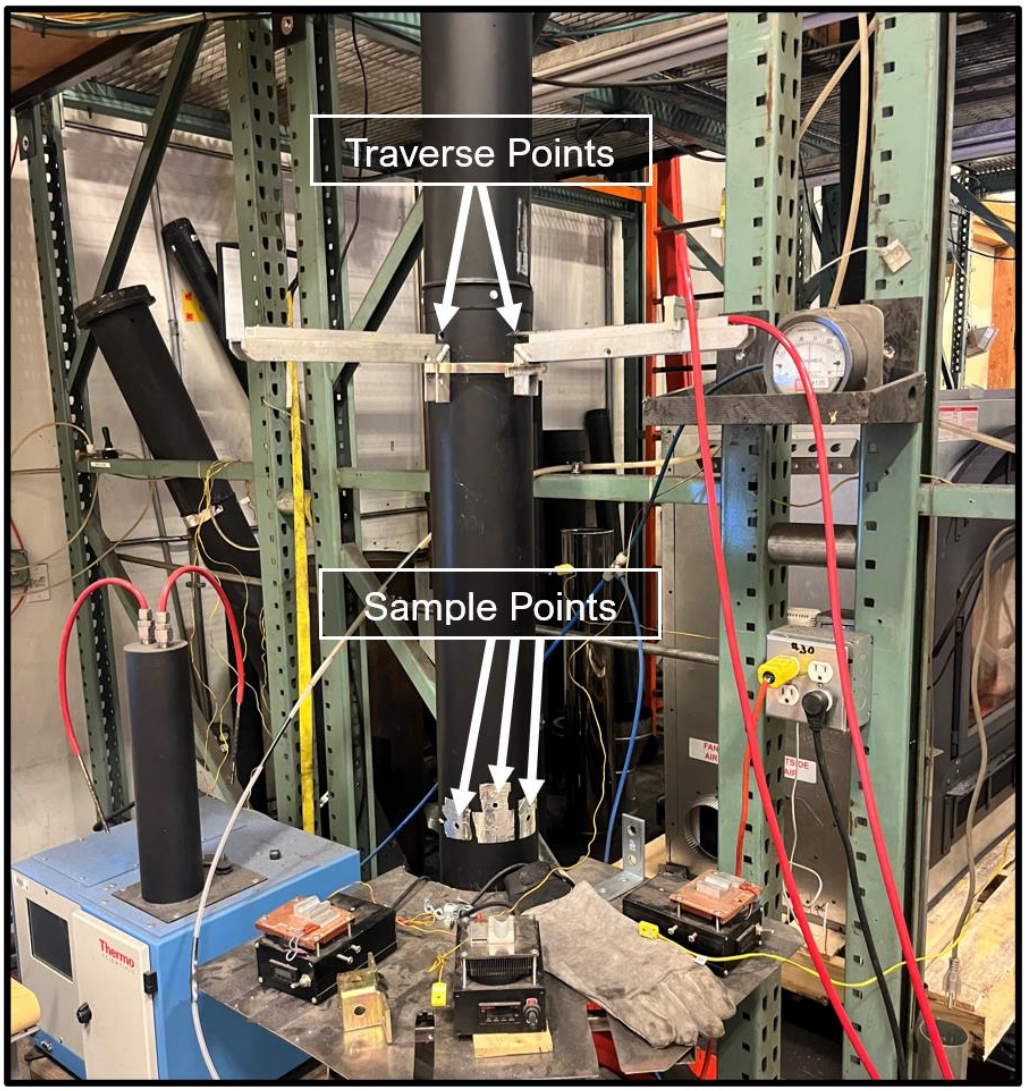

Sampling Methods

ASTM E2515 was used in collecting particulate samples. The dilution tunnel is 6 inches in diameter. All sampling conditions per ASTM E2515 were followed. No alternate procedures were used.

Analytical Methods Description

All sample recovery and analysis procedures followed ASTM E2515 procedures. At the end of each test run, filters, O-Rings and probes were removed from their housings dessicated for a minimum of 24 hours, and then weighed at 6 hour intervals to a constant weight per ASTM E2515-11 Section 10. .

Calibration, Quality Control and Assurances

Calibration procedures and results were conducted per EPA Method 28R and ASTM E2515-11. Test method quality control procedures (leak checks, volume meter checks, stratification checks, proportionality results) followed the procedures outlined. All leak check data can be found on the Quality systems check page for each run performed in Appendix A of the report.

Appliance Sealing and Storage

Upon completion of testing, the appliance was secured with metal strapping and the seal below was applied, the appliance was then returned to the manufacturer's location at: 1915 West Saunders Street Mt Pleasant IA, 52641, for archival.

Sealing Label

ATTENTION:

THIS SEAL IS NOT TO BE BROKEN WITHOUT PRIOR AUTHORIZATION FROM THE UNITED STATES ENVIRONMENTAL PROTECTION AGENCY.

THIS APPLIANCE HAS BEEN SEALED INACCORDANCE WITH REQUIREMNTS OF 40CFR PART 60 SUBPART AAA §60.535 (a)(2)(vii)

REPORT #_____ DATE SEALED_____

MANUFACTURER_____ MODEL #_____

Sealed Unit

List of Appendices

The following appendices have been submitted electronically in conjunction with this report:

Appendix A – Test Run Data, Technician Notes, and Sample Analysis – Page 20 of Non-CBI PDF

Appendix B – Labels and Manuals – Page 170 of Non-CBI Report

Appendix C –Equipment Calibration Records – Page 260 of Non-CBI Report

Appendix D – Design Drawings (CBI Report Only)

Appendix E – Manufacturer QAP (CBI Report Only)

Appendix A: Test Run Data

Pre-Conditioning Data

Client:	HHT	Job #:	F24-253
Model:	Pioneer-III	Tracking #:	180
Date(s):	2/5/2024	Technician:	

Elapsed Time (hrs)	Flue (°F)	Catalyst Exit (°F)	Notes: Indicate initial air setting and any changes in in setting during conditioning, as well as weight and average moisture content of all fuel additions.
0	519	NA	1-23-24 ML Preliminary Test Run
1	529	NA	1-23-24 ML Preliminary Test Run
2	476	NA	1-23-24 ML Preliminary Test Run
3	154	NA	1-23-24 ML Preliminary Test Run
4	129	NA	1-23-24 ML Preliminary Test Run
5	130	NA	1-23-24 ML Preliminary Test Run
6	133	NA	1-23-24 ML Preliminary Test Run
7	130	NA	1-23-24 ML Preliminary Test Run
8	122	NA	1-23-24 ML Preliminary Test Run
9	112	NA	1-23-24 ML Preliminary Test Run
10	104	NA	1-23-24 ML Preliminary Test Run
11	113	NA	1-23-24 ML Preliminary Test Run
12	457	NA	1-19-24 ML Preliminary Test Run
13	528	NA	1-19-24 ML Preliminary Test Run
14	465	NA	1-19-24 ML Preliminary Test Run
15	165	NA	1-19-24 ML Preliminary Test Run
16	134	NA	1-19-24 ML Preliminary Test Run
17	127	NA	1-19-24 ML Preliminary Test Run
18	123	NA	1-19-24 ML Preliminary Test Run
19	113	NA	1-19-24 ML Preliminary Test Run
20	108	NA	1-19-24 ML Preliminary Test Run
21	533	NA	1-18-24 MH Preliminary Test Run
22	577	NA	1-18-24 MH Preliminary Test Run
23	452	NA	1-18-24 MH Preliminary Test Run
24	168	NA	1-18-24 MH Preliminary Test Run
25	130	NA	1-18-24 MH Preliminary Test Run
26	130	NA	1-18-24 MH Preliminary Test Run
27	114	NA	1-18-24 MH Preliminary Test Run
28	108	NA	1-18-24 MH Preliminary Test Run
29	216	NA	1-18-24 MH Preliminary Test Run
30	334	NA	12-28-23 ML Preliminary Test Run
31	526	NA	12-28-23 ML Preliminary Test Run
32	398	NA	12-28-23 ML Preliminary Test Run
33	158	NA	12-28-23 ML Preliminary Test Run
34	132	NA	12-28-23 ML Preliminary Test Run
35	111	NA	12-28-23 ML Preliminary Test Run
36	115	NA	12-28-23 ML Preliminary Test Run
37	119	NA	12-28-23 ML Preliminary Test Run
38	127	NA	12-28-23 ML Preliminary Test Run
39	130	NA	12-28-23 ML Preliminary Test Run
40	471	NA	12-18-23 ML Preliminary Test Run
41	509	NA	12-18-23 ML Preliminary Test Run
42	488	NA	12-18-23 ML Preliminary Test Run
43	230	NA	12-18-23 ML Preliminary Test Run
44	153	NA	12-18-23 ML Preliminary Test Run
45	140	NA	12-18-23 ML Preliminary Test Run
46	125	NA	12-18-23 ML Preliminary Test Run
47	121	NA	12-18-23 ML Preliminary Test Run
48	118	NA	12-18-23 ML Preliminary Test Run
49	364	NA	12-12-23 ML Preliminary Test Run
50	559	NA	12-12-23 ML Preliminary Test Run

Signature/Date:_____ 3/25/2024

Date	1/23/2024	**Run #**	
Model #	PioneerIII	**Attempted Burn Rate**	Mid Low
Firebox Size	4.06		

Load Range

25.578	28.42	31.262

Piece Size Thickness	Width	Length	Weight lbs	Dry Uncorrected Meter Moisture (19-25%)			Ave. Moisture
4	4	19	4.93	23	23	25	23.7
4	4	19	6.05	22	19	20	20.3
4	4	19	6.31	20	20	20	20.0
4	4	19	5.8	22	24	23	23.0
4	4	19	5.86	19	21	22	20.7
							0.0
							0.0
							0.0

Test Load Weight	28.95	lbs.	**UC Dry %**	21.5
	13.1	kg.	**Cor Wet %**	25.95
			% of WL	0.74
Test Load with spacers/nails	31.54	lbs.	**Ttl Dry Kg**	10.6

Coal Bed Range 6.3 to 7.885 lbs.

Length of Test	663	mins.	**Burn Rate**	2.35	lbs.	**BTU's** 19,258
				1.07	**Kg**	

Date	1/19/2024	**Run #**	
Model #	Pioneer-III	**Attempted Burn Rate**	ML
Firebox Size	4.06		

Load Range

25.578	28.42	31.262

Piece Size Thickness	Width	Length	Weight lbs	Dry Uncorrected Meter Moisture (19-25%)			Ave. Moisture
4	4	19	5.025	20	25	24	23.0
4	4	19	6.05	22	20	22	21.3
4	4	19	5.22	22	21	20	21.0
4	4	19	5.04	22	20	24	22.0
4	4	19	6	19	23	20	20.7
							0.0
							0.0
							0.0

Test Load Weight	27.335	lbs.	**UC Dry %**	21.6
	12.4	kg.	**Cor Wet %**	24.13
			% of WL	0.76
Test Load with spacers/nails	29.34	lbs.	**Ttl Dry Kg**	10.1
Coal Bed Range	5.9	to	7.335	lbs.

Length of Test	530	mins.	**Burn Rate**	2.73	lbs.	**BTU's** 22,398
				1.24	**Kg**	

Date	1/18/2024	**Run #**	
Model #	Pioneer III	**Attempted Burn Rate**	MH
Firebox Size	4.06		

Load Range

25.578	28.42	31.262

Piece Size Thickness	Width	Length	Weight lbs	Dry Uncorrected Meter Moisture (19-25%)			Ave. Moisture
4	4	19	5.2	21	22	25	22.7
4	4	19	4.32	23	22	20	21.7
4	4	19	5.71	22	21	24	22.3
4	4	19	5.52	24	20	19	21.0
4	4	19	5.32	21	21	20	20.7
							0.0
							0.0
							0.0

Test Load Weight	26.07	lbs.	**UC Dry %**	21.7
	11.8	kg.	**Cor Wet %**	23.52
			% of WL	0.76
Test Load with spacers/nails	28.62	lbs.	**Ttl Dry Kg**	9.9
Coal Bed Range	5.7	to	7.155	lbs.

						BTU's
Length of Test	480	mins.	**Burn Rate**	2.94	lbs.	24,111
				1.33	**Kg**	

Date	12/28/2023	**Run #**	
Model #	Pioneer III	**Attempted Burn Rate**	ML
Firebox Size	4.06		

Load Range

25.578	28.42	31.262

Piece Size Thickness	Width	Length	Weight lbs	Dry Uncorrected Meter Moisture (19-25%)			Ave. Moisture
4	4	19	4.61	24	22	22	22.7
4	4	19	5.73	22	21	20	21.0
4	4	19	4.81	19	20	21	20.0
4	4	19	5.46	23	22	22	22.3
4	4	19	5.11	19	20	21	20.0
							0.0
							0.0
							0.0

Test Load Weight	25.72	lbs.	**UC Dry %**	21.2
	11.7	kg.	**Cor Wet %**	24.13
			% of WL	0.76
Test Load with spacers/nails	29.24	lbs.	**Ttl Dry Kg**	10.1
Coal Bed Range	5.8	to	7.31	lbs.

					BTU's
Length of Test	550	mins.	**Burn Rate**	2.63 lbs.	21,581
				1.19 Kg	

Date	12/18/2023	**Run #**	
Model #	Pioneer III	**Attempted Burn Rate**	ML
Firebox Size	4.06		

Load Range

25.578	28.42	31.262

Piece Size Thickness	Width	Length	Weight lbs	Dry Uncorrected Meter Moisture (19-25%)			Ave. Moisture
4	4	19	5.54	19	20	19	19.3
4	4	19	5.64	1	19	19	13.0
4	4	19	5.65	19	19	19	19.0
44	4	19	5.36	19	19	19	19.0
4	4	19	5.41	19	19	19	19.0
							0.0
							0.0
							0.0

Test Load Weight	27.6	lbs.	**UC Dry %**	17.9
	12.5	kg.	**Cor Wet %**	23.42
			% of WL	0.77
Test Load with spacers/nails	30.01	lbs.	**Ttl Dry Kg**	10.4

Coal Bed Range 6.0 to 7.5025 lbs.

						BTU's
Length of Test	534	mins.	**Burn Rate**	2.63	lbs.	21,575
				1.19	**Kg**	

Date	12/12/2023	**Run #**	
Model #	Pioneer III	**Attempted Burn Rate**	ML
Firebox Size	4.06		

Load Range

25.578	28.42	31.262

Piece Size Thickness	Width	Length	Weight lbs	Dry Uncorrected Meter Moisture (19-25%)			Ave. Moisture	
4	4	19	5.27	20	22	20	20.7	4.367403
4	4	19	5.23	23	23	20	22.0	4.286885
4	4	19	5.56	20	20	24	21.3	4.582418
4	4	19	5.6	22	20	20	20.7	4.640884
4	4	19	5.04	24	22	20	22.0	4.131148
							0.0	
							0.0	
							0.0	

Test Load Weight	26.7	lbs.	**UC Dry %**	21.3
	12.1	kg.	**Cor Wet %**	24.2
			% of WL	0.76
Test Load with spacers/nails	29.36	lbs.	**Ttl Dry Kg**	10.1
Coal Bed Range	5.3	to	6.675	lbs.

						BTU's
Length of Test	548	mins.	**Burn Rate**	2.65	lbs.	21,725
				1.20	**Kg**	

HEARTH & HOME technologies®
The Hearth Experts™

Pioneer-III EPA Test Burn Instructions

2/6/24

HEAT & GLO MAJESTIC heatilator MONESSEN SimpliFire
FIRESIDE HEARTH & HOME QUADRA-FIRE HARMAN VERMONT CASTINGS outdoor lifestyles

Kindling

- Pile approximately 3 pounds of kindling in center of firebox, log cabin style, and light. Kindling should be approximately ½” x ½”.
- Leave door open 1” for 5 minutes
- Close door & press SBT button
- Let it burn down to hot coals

1st Rick

- Cut four 2x4's at 12" & four 2x4's at 21"
- Place in firebox log cabin style
- Leave door open 1" for approximately 2 minutes
- Close door & press SBT button
- Let it burn down to hot coals
- Scoop & tare scale

2nd Rick

- Cut fourteen 2x4's at 12" & four 2x4's at 21"
- Place in firebox log cabin style
- Leave door open 1" for approximately 2 minutes
- Close door & press SBT button
- At one hour, break down and level coal bed and load test fuel load

Test Fuel Loads

HEARTH & HOME technologies
The Hearth Experts

- After loading test fuel, leave door open 1” for 2.5 minutes.
- After 2.5 minutes, lightly latch the door with handle at 90 degrees.
- After 5 minutes, completely shut the door and press the SBT button.

WOOD STOVE TEST DATA PACKET
ASTM E2780/E2515

Run 1 Data Summary

Client:	HHT
Model:	Pioneer III
Job #:	24-253
Tracking #:	180
Test Date:	2/6/2024

2/19/2024

Techician Signature Date

TEST RESULTS - ASTM E2780 / ASTM E2515

Client: HHT
Model: Pioneer III
Run #: 1

Job #: 24-253
Tracking #: 180
Technician: SJB
Date: 2/6/2024

Burn Rate (kg/hr):	1.45

	Ambient Sample	Sample Train A	Sample Train B	1st Hour Filter
Total Sample Volume (ft^3)	38.386	87.166	86.963	8.952
Average Gas Velocity in Dilution Tunnel (ft/sec)	18.7			
Average Gas Flow Rate in Dilution Tunnel (dscf/hr)	12158.5			
Average Gas Meter Temperature (°F)	69.8	97.5	96.9	81.4
Total Sample Volume (dscf)	38.362	82.711	82.686	8.700
Average Tunnel Temperature (°F)	95.5			
Total Time of Test (min)	479			
Total Particulate Catch (mg)	0.0	7.2	8.3	7.5
Particulate Concentration, dry-standard (g/dscf)	0.0000000	0.0000871	0.0001004	0.0008621
Total PM Emissions (g)	0.00	8.45	9.74	10.48
Particulate Emission Rate (g/hr)	0.00	1.06	1.22	10.48
Emissions Factor (g/kg)	-	0.73	0.84	-
Difference from Average Total Particulate Emissions (g)	-	0.65	0.65	-
Difference from Average Total Particulate Emissions (%)	-	7.1%	7.1%	
Difference from Average Emissions Factor (g/kg)	-	0.06	0.06	-

Final Average Results	
Total Particulate Emissions (g)	9.10
Particulate Emission Rate (g/hr)	1.14
Emissions Factor (g/kg)	0.79
HHV Efficiency (%)	68.0%
LHV Efficiency (%)	73.5%
CO Emissions (g/min)	1.91

Quality Checks	Requirement	Observed	Result
Dual Train Precision	Each train within 7.5% of average emissions (in grams), or emission factors within 0.5 g/kg	See Above	OK
Filter Temps	<90 °F	89.4	OK
Face Velocity	< 30 ft/min	10.2	OK
Leakage Rate	Less than 4% of average sample rate	0.001 cfm	OK
Ambient Temp	55-90 °F	Min:66.9/Max:72.8	OK
Negative Probe Weight Evaluation	<5% of Total Catch	Probe Catch Not Negative	OK
Pro-Rate Variation	90% of readings between 90-110%; none greater than 120% or less than 80%	See Data Tabs	OK
Stove Surface ΔT	<126°F	211.7	Not Acceptable

B415.1 Efficiency Results

Manufacturer:	HHT
Model:	Pioneer III
Date:	02/06/24
Run:	1
Control #:	24-253
Test Duration:	479
Output Category:	3

Test Results in Accordance with CSA B415.1-09

	HHV Basis	LHV Basis
Overall Efficiency	68.0%	73.5%
Combustion Efficiency	94.4%	94.4%
Heat Transfer Efficiency	72.0%	77.8%

Output Rate (kJ/h)	19,334	18,341	**(Btu/h)**
Burn Rate (kg/h)	1.44	3.16	**(lb/h)**
Input (kJ/h)	28,440	26,978	**(Btu/h)**

Test Load Weight (dry kg)	11.46	25.26	**dry lb**
MC wet (%)	18.62		
MC dry (%)	22.88		
Particulate (g)	9.10		
CO (g)	914		
Test Duration (h)	7.98		

Emissions	Particulate	CO
g/MJ Output	0.06	5.92
g/kg Dry Fuel	0.79	79.78
g/h	1.14	114.54
g/min	0.02	1.91
lb/MM Btu Output	0.14	13.77

Air/Fuel Ratio (A/F)	14.10

VERSION: **2.4** **4/15/2010**

WOODSTOVE FUEL DATA - ASTM E2780

Client: HHT
Model: Pioneer III
Run #: 1

Job #: 24-253
Tracking #: 180
Technician: SJB
Date: 2/6/2024

Preburn Fuel Information

Size	Length (in)	Moisture Content (% DB)	Size	Length (in)	Moisture Content (% DB)
2x4	21.00	20.1	2x4	12.00	20.4
2x4	21.00	21.0	2x4	12.00	19.9
2x4	21.00	20.9	2x4	12.00	22.3
2x4	21.00	20.4	2x4	12.00	21.8
2x4	12.00	20.1	2x4	12.00	19.7
2x4	12.00	19.2	2x4	12.00	18.4
2x4	12.00	18.7			
2x4	12.00	21.1			

Total Fuel Weight (lbs): 20.47
Average Moisture (%DB): 20.3

Firebox Volume (ft^3): 4.06
Total 2x4 Crib Weight, with spacers (lbs): 0.00
Total 4x4 Crib Weight, with spacers (lbs): 31.02
Total Wet Fuel Weight, with spacers (lbs): 31.02

Coal Bed Range (20-25%):
Min (lbs): 6.20
Max (lbs): 7.76

Test Fuel Information

Size	Length (in)	Weight (lbs)	Moisture Content (%DB)			Dry Weight (lbs)
4x4	21.75	4.81	22.6	23.7	24.1	3.90
4x4	21.75	4.92	20.4	22.5	22.3	4.04
4x4	21.75	5.25	22.3	22.5	22.8	4.28
4x4	21.75	6.81	24.6	23.0	23.2	5.51
4x4	21.75	6.90	23.5	22.5	23.2	5.61

Total Dry Weight, no spacers (lbs): 23.34
Total Dry Weight, with spacers (lbs): 25.48

Spacer Moisture Readings (%DB)

9.3	7.5	7.2	11.0	7.5			
11.6	11.4	9.9	9.0	11.4			
8.5	7.5	8.4	9.3	7.5			
7.2	9.2	7.1	10.8	9.2			

Quality Checks	Requirement	Observed	Result
Fuel Density	25 - 36 (lbs/ft^3, DB)	30.3	OK
Loading Density	6.3 - 7.7 (lbs/ft^3, WB)	7.64	OK
2x4 Fuel Mix	35 - 65 % of total weight	N/A	N/A

DILUTION TUNNEL & MISC. DATA - ASTM E2780 / E2515

Client:	HHT	Job #:	24-253
Model:	Pioneer III	Tracking #:	180
Run #:	1	Technician:	SJB
Test Start Time:	12:53	Date:	2/6/2024

Total Sampling Time (min):	479	
Recording Interval (min):	1	
Meter Box γ Factor:	1.004	(A)
Meter Box γ Factor:	1.005	(B)
Meter Box γ Factor:	1.004	(C)
Meter Box γ Factor:	1.013	(Ambient)
Induced Draft Check (in. H_2O):	0	
Smoke Capture Check (%):	100%	
Date Flue Pipe Last Cleaned:	2/5/2024	
Test Fuel Scale Audit (lbs)	10.00	
Platform Scale Audit (lbs)	10.0	

	Pre-Test	Post Test	Avg.
Barometric Pressure (in. Hg)	29.63	29.63	29.63
Relative Humidity (%)	32.2	35.6	
Room Air Velocity (ft/min)	0	0	
Pitot Tube Leak Check	0	0	
Ambient Sample Volume:		38.386	ft^3

Sample Train Leak Checks

	Pre-test	Post-test			
(A)	0.001	0.001	cfm @	-5	in. Hg
(B)	0.001	0.000	cfm @	-5	in. Hg
(C)	0.000	0.000	cfm @	-5	in. Hg
(Ambient)	0.002	0.001	cfm @	-5	in. Hg

DILUTION TUNNEL FLOW

Traverse Data

Point	dP (in H_2O)	Temp (°F)
1	0.072	76
2	0.080	76
3	0.086	76
4	0.074	76
5	0.058	76
6	0.082	76
7	0.096	76
8	0.088	76
Center	0.086	76

Dilution Tunnel H_2O:	2.00	percent
Tunnel Diameter:	6	inches
Pitot Tube Cp:	0.99	[unitless]
Dilution Tunnel MW(dry):	29.00	lb/lb-mole
Dilution Tunnel MW(wet):	28.78	lb/lb-mole
Tunnel Area:	0.1963	ft^2
V_{strav}:	18.88	ft/sec
V_{scent}:	19.68	ft/sec
F_p:	0.959	[ratio]
Initial Tunnel Flow:	212.5	scf/min

Static Pressure: -0.141 in. H_2O

TEST FUEL PROPERTIES

Fuel Load Configuration

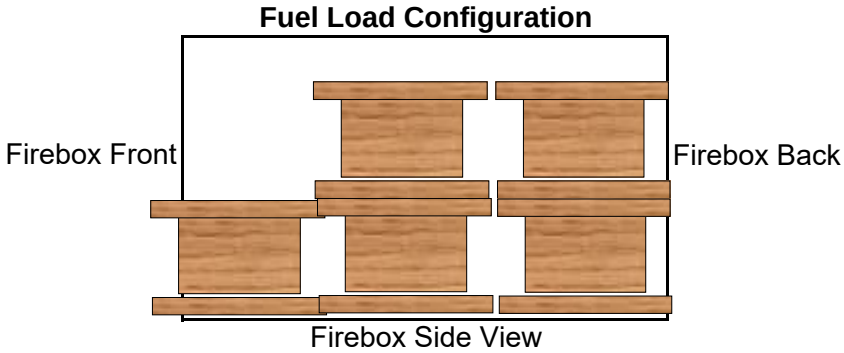

Actual Fuel Used Properties

Fuel Type:	D. Fir
HHV (kJ/kg)	19,810
%C	48.73
%H	6.87
%O	43.9
%Ash	0.5
MC (%DB)	22.9

WOODSTOVE PREBURN DATA - ASTM E2780

Client: HHT
Model: Pioneer III
Run #: 1

Job #: 24-253
Tracking #: 180
Technician: SJB
Date: 2/6/2024

Recording Interval (min): 1
Run Time (min): 60

			Temperatures (°F)							
Elapsed Time (min)	Scale Reading (lbs)	Flue Draft (in H_2O)	FB Left	FB Right	FB Back	FB Top	FB Bottom	Stove Surface Average	Flue	Ambient
0	20.62	-0.075	429	411	276	405	314	366.9	550	71
1	20.30	-0.075	425	409	270	419	315	367.4	551	71
2	20.00	-0.074	420	408	263	427	316	366.8	542	71
3	19.67	-0.077	416	407	257	436	316	366.4	571	71
4	19.34	-0.076	412	407	253	445	316	366.7	567	71
5	19.06	-0.074	408	408	250	450	316	366.4	545	71
6	18.78	-0.075	405	409	247	451	317	365.7	538	70
7	18.47	-0.078	401	411	245	456	317	365.9	549	71
8	18.18	-0.074	397	412	244	459	317	365.9	553	71
9	17.89	-0.077	394	413	243	462	317	366.1	553	70
10	17.57	-0.080	391	416	242	466	317	366.3	566	70
11	17.26	-0.078	388	418	242	469	317	366.9	579	70
12	16.93	-0.076	385	421	242	474	317	367.6	576	70
13	16.63	-0.077	382	424	242	477	316	368.1	578	70
14	16.31	-0.078	379	427	242	479	316	368.7	576	70
15	15.99	-0.076	377	430	242	484	316	369.8	572	70
16	15.69	-0.076	374	434	243	493	316	372.0	559	71
17	15.39	-0.076	373	438	243	508	316	375.5	556	71
18	15.09	-0.075	371	442	243	519	315	378.1	557	70
19	14.79	-0.075	370	447	243	523	315	379.5	559	70
20	14.50	-0.076	369	452	244	515	314	378.7	560	70
21	14.17	-0.075	368	456	245	514	314	379.3	563	70
22	13.87	-0.076	367	462	245	531	313	383.5	566	70
23	13.56	-0.076	366	467	246	525	313	383.4	570	70
24	13.26	-0.075	366	472	246	527	313	384.7	571	70
25	12.92	-0.077	366	478	246	553	312	391.0	580	70
26	12.61	-0.078	366	483	246	570	312	395.4	584	70
27	12.31	-0.076	366	488	247	588	312	400.2	591	70
28	12.05	-0.077	367	492	247	593	312	402.0	592	70
29	11.80	-0.077	367	496	248	601	311	404.5	588	71
30	11.54	-0.077	367	500	248	593	311	403.7	583	71
31	11.29	-0.078	368	503	248	594	311	404.7	584	70
32	11.03	-0.076	369	505	248	599	310	406.1	584	71
33	10.79	-0.078	370	507	248	604	310	407.7	578	71
34	10.53	-0.076	371	508	248	604	310	408.0	583	71
35	10.29	-0.077	371	509	247	611	310	409.7	583	71
36	10.05	-0.077	373	510	247	594	309	406.6	577	71
37	9.83	-0.076	374	511	247	592	309	406.5	575	71
38	9.60	-0.075	374	512	247	600	309	408.3	574	71
39	9.38	-0.071	376	512	246	608	309	410.2	572	71
40	9.18	-0.074	377	513	247	616	309	412.4	566	71
41	8.98	-0.073	378	513	247	616	309	412.5	559	71
42	8.80	-0.074	379	514	247	609	308	411.6	552	71
43	8.60	-0.073	380	514	248	602	309	410.4	541	71
44	8.42	-0.073	382	514	248	614	308	413.1	534	71

WOODSTOVE PREBURN DATA - ASTM E2780

Client: HHT
Model: Pioneer III
Run #: 1

Job #: 24-253
Tracking #: 180
Technician: SJB
Date: 2/6/2024

Recording Interval (min): 1
Run Time (min): 60

			Temperatures (°F)							
Elapsed Time (min)	Scale Reading (lbs)	Flue Draft (in H_2O)	FB Left	FB Right	FB Back	FB Top	FB Bottom	Stove Surface Average	Flue	Ambient
45	8.25	-0.072	383	514	249	608	308	412.6	527	71
46	8.09	-0.070	385	513	250	607	309	412.7	532	71
47	7.93	-0.070	387	513	251	622	308	416.1	543	71
48	7.76	-0.071	389	512	252	620	308	416.2	545	71
49	7.58	-0.073	391	512	254	623	308	417.5	551	71
50	7.41	-0.072	393	511	255	627	308	418.9	554	71
51	7.24	-0.071	395	511	256	625	309	419.0	554	71
52	7.08	-0.073	398	510	258	622	308	419.3	554	71
53	6.91	-0.073	400	509	260	614	308	418.4	551	71
54	6.76	-0.071	403	508	264	605	309	417.6	543	71
55	6.63	-0.070	406	507	267	594	309	416.5	531	71
56	6.53	-0.069	410	505	271	582	309	415.3	521	71
57	6.42	-0.068	414	504	275	569	309	414.1	507	71
58	6.33	-0.065	417	503	279	557	309	412.9	493	71
59	6.27	-0.064	421	502	282	545	309	411.8	471	71
60	6.21	-0.062	425	500	286	531	309	410.4	449	71

BOX A TEST DATA - ASTM E2780 / ASTM E2515

Client: HHT
Model: Pioneer III
Run #: 1

Job #: 24-253
Tracking #: 180
Technician: SJB
Date: 2/6/2024

	Particulate Sampling Data							Fuel Weight (lb)		Temperature Data (°F)			
Elapsed Time (min)	Gas Meter (ft^3)	Sample Rate (cfm)	Dilution Tunnel dP (in H_2O)	Orifice dH (in H_2O)	Meter Temp (°F)	Meter Vacuum (in Hg)	Pro. Rate (%)	Scale Reading	Weight Change	Dilution Tunnel	Flue	Filter	Ambient
0	0.004		0.084	1.29	74	0.9		31.04		148	371	62	72
1	0.122	0.118	0.082	2.67	74	1.0	-	30.84	-0.20	205	456	73	72
2	0.286	0.164	0.079	2.70	74	1.1	-	30.18	-0.66	312	746	84	72
3	0.442	0.156	0.084	2.72	74	1.1	-	29.73	-0.45	240	637	78	72
4	0.612	0.170	0.080	2.75	74	1.1	-	29.27	-0.46	212	684	80	73
5	0.772	0.160	0.080	2.76	74	1.2	-	28.68	-0.59	230	837	83	73
6	0.934	0.162	0.079	2.78	74	1.2	-	28.40	-0.28	186	654	80	73
7	1.104	0.170	0.080	2.80	74	1.1	-	28.10	-0.30	169	612	79	73
8	1.264	0.160	0.080	2.82	74	1.1	-	27.84	-0.26	160	579	79	72
9	1.430	0.166	0.080	2.83	75	1.1	-	27.58	-0.26	156	571	79	72
10	1.598	0.168	0.080	2.84	75	1.1	95	27.33	-0.25	153	573	79	72
11	1.762	0.164	0.079	2.86	75	1.2	-	27.08	-0.25	151	559	79	72
12	1.930	0.168	0.081	2.86	75	1.2	-	26.82	-0.26	149	553	79	72
13	2.101	0.171	0.081	2.86	75	1.2	-	26.55	-0.27	149	561	79	72
14	2.265	0.164	0.081	2.85	76	1.2	-	26.29	-0.26	148	567	79	72
15	2.431	0.166	0.081	2.88	76	1.2	-	26.04	-0.25	148	566	79	72
16	2.600	0.169	0.081	2.90	76	1.2	-	25.80	-0.24	145	561	79	71
17	2.767	0.167	0.083	2.89	76	1.2	-	25.58	-0.22	143	537	79	71
18	2.936	0.169	0.082	2.92	77	1.2	-	25.34	-0.24	141	529	79	72
19	3.110	0.174	0.082	2.92	77	1.2	-	25.10	-0.24	141	545	79	72
20	3.279	0.169	0.080	2.94	77	1.2	101	24.85	-0.25	141	551	79	72
21	3.445	0.166	0.082	2.95	78	1.2	-	24.61	-0.24	141	553	79	72
22	3.618	0.173	0.082	2.96	78	1.2	-	24.37	-0.24	141	554	79	71
23	3.787	0.169	0.081	2.97	78	1.2	-	24.15	-0.22	140	552	79	71
24	3.958	0.171	0.080	2.98	79	1.2	-	23.92	-0.23	139	548	79	72
25	4.129	0.171	0.081	2.98	79	1.2	-	23.70	-0.22	138	541	79	72
26	4.299	0.170	0.081	2.98	79	1.2	-	23.47	-0.23	138	528	79	72
27	4.471	0.172	0.083	2.98	80	1.2	-	23.26	-0.21	135	516	79	72
28	4.639	0.168	0.082	2.99	80	1.3	-	23.06	-0.20	134	512	79	72
29	4.813	0.174	0.081	3.00	80	1.2	-	22.84	-0.22	133	509	78	71
30	4.989	0.176	0.084	3.00	81	1.2	100	22.64	-0.20	132	507	78	71
31	5.159	0.170	0.082	3.02	81	1.2	-	22.43	-0.21	131	504	78	71

BOX A TEST DATA - ASTM E2780 / ASTM E2515

Client: HHT
Model: Pioneer III
Run #: 1

Job #: 24-253
Tracking #: 180
Technician: SJB
Date: 2/6/2024

	Particulate Sampling Data							Fuel Weight (lb)		Temperature Data (°F)			
Elapsed Time (min)	Gas Meter (ft^3)	Sample Rate (cfm)	Dilution Tunnel dP (in H_2O)	Orifice dH (in H_2O)	Meter Temp (°F)	Meter Vacuum (in Hg)	Pro. Rate (%)	Scale Reading	Weight Change	Dilution Tunnel	Flue	Filter	Ambient
32	5.332	0.173	0.082	3.02	81	1.2	-	22.22	-0.21	131	507	78	71
33	5.507	0.175	0.083	3.03	82	1.2	-	22.01	-0.21	131	515	78	71
34	5.680	0.173	0.082	3.04	82	1.2	-	21.79	-0.22	129	513	78	71
35	5.847	0.167	0.082	3.03	82	1.2	-	21.58	-0.21	129	514	78	71
36	6.025	0.178	0.083	3.05	83	1.2	-	21.37	-0.21	129	518	78	72
37	6.197	0.172	0.082	3.05	83	1.2	-	21.16	-0.21	128	520	78	71
38	6.373	0.176	0.083	3.04	83	1.2	-	20.94	-0.22	127	521	78	71
39	6.545	0.172	0.083	3.05	84	1.2	-	20.74	-0.20	127	523	78	71
40	6.718	0.173	0.082	3.06	84	1.3	99	20.51	-0.23	127	525	78	71
41	6.894	0.176	0.081	3.07	84	1.2	-	20.30	-0.21	127	527	78	71
42	7.070	0.176	0.081	3.07	85	1.2	-	20.09	-0.21	127	522	78	71
43	7.240	0.170	0.083	3.07	85	1.2	-	19.89	-0.20	127	519	78	71
44	7.420	0.180	0.083	3.09	85	1.2	-	19.67	-0.22	126	506	78	71
45	7.594	0.174	0.081	3.08	86	1.2	-	19.47	-0.20	125	497	78	71
46	7.767	0.173	0.081	3.08	86	1.2	-	19.27	-0.20	124	486	78	71
47	7.944	0.177	0.082	3.10	86	1.2	-	19.07	-0.20	124	474	77	71
48	8.122	0.178	0.083	3.10	87	1.2	-	18.88	-0.19	123	479	77	71
49	8.296	0.174	0.083	3.09	87	1.2	-	18.69	-0.19	123	475	77	71
50	8.475	0.179	0.081	3.10	87	1.2	101	18.48	-0.21	122	471	77	71
51	8.645	0.170	0.081	3.10	87	1.2	-	18.31	-0.17	122	468	77	71
52	8.823	0.178	0.082	3.11	88	1.2	-	18.12	-0.19	122	465	77	71
53	9.004	0.181	0.081	3.11	88	1.2	-	17.92	-0.20	121	460	77	71
54	9.177	0.173	0.080	3.12	88	1.2	-	17.74	-0.18	121	461	77	71
55	9.352	0.175	0.081	3.12	88	1.2	-	17.55	-0.19	121	465	77	71
56	9.530	0.178	0.082	3.12	89	1.2	-	17.37	-0.18	121	470	77	71
57	9.710	0.180	0.080	3.12	89	1.2	-	17.17	-0.20	121	471	77	71
58	9.885	0.175	0.082	3.14	89	1.2	-	17.00	-0.17	121	473	77	71
59	10.059	0.174	0.081	3.12	89	1.2	-	16.80	-0.20	121	477	77	71
60	10.237	0.178	0.081	3.15	90	1.2	101	16.61	-0.19	121	484	77	71
61	10.415	0.178	0.082	3.14	90	1.2	-	16.42	-0.19	121	490	77	71
62	10.595	0.180	0.081	3.14	90	1.2	-	16.23	-0.19	122	494	77	71
63	10.772	0.177	0.080	3.14	90	1.2	-	16.03	-0.20	122	499	77	71

BOX A TEST DATA - ASTM E2780 / ASTM E2515

Client: HHT
Model: Pioneer III
Run #: 1

Job #: 24-253
Tracking #: 180
Technician: SJB
Date: 2/6/2024

	Particulate Sampling Data							Fuel Weight (lb)		Temperature Data (°F)			
Elapsed Time (min)	Gas Meter (ft^3)	Sample Rate (cfm)	Dilution Tunnel dP (in H_2O)	Orifice dH (in H_2O)	Meter Temp (°F)	Meter Vacuum (in Hg)	Pro. Rate (%)	Scale Reading	Weight Change	Dilution Tunnel	Flue	Filter	Ambient
64	10.952	0.180	0.080	3.15	91	1.2	-	15.84	-0.19	122	501	77	71
65	11.127	0.175	0.080	3.15	91	1.2	-	15.65	-0.19	122	503	77	71
66	11.307	0.180	0.080	3.15	91	1.2	-	15.46	-0.19	122	501	77	71
67	11.488	0.181	0.080	3.16	91	1.2	-	15.26	-0.20	123	505	77	71
68	11.664	0.176	0.078	3.16	92	1.2	-	15.06	-0.20	123	503	77	71
69	11.838	0.174	0.080	3.15	92	1.2	-	14.90	-0.16	123	502	77	71
70	12.022	0.184	0.078	3.17	92	1.2	103	14.71	-0.19	123	502	77	71
71	12.199	0.177	0.077	3.17	92	1.2	-	14.53	-0.18	123	500	77	71
72	12.381	0.182	0.080	3.18	92	1.2	-	14.34	-0.19	123	499	77	71
73	12.554	0.173	0.080	3.17	92	1.2	-	14.16	-0.18	122	499	77	71
74	12.735	0.181	0.079	3.16	93	1.2	-	13.98	-0.18	123	502	77	71
75	12.915	0.180	0.080	3.16	93	1.2	-	13.79	-0.19	123	505	77	72
76	13.096	0.181	0.082	3.18	93	1.2	-	13.62	-0.17	123	509	77	71
77	13.275	0.179	0.082	3.17	93	1.2	-	13.42	-0.20	123	512	77	72
78	13.452	0.177	0.081	3.17	93	1.2	-	13.24	-0.18	124	515	77	72
79	13.631	0.179	0.081	3.18	94	1.2	-	13.05	-0.19	124	517	77	72
80	13.809	0.178	0.082	3.18	94	1.2	102	12.88	-0.17	124	519	77	71
81	13.989	0.180	0.080	3.18	94	1.2	-	12.69	-0.19	124	519	77	71
82	14.168	0.179	0.081	3.19	94	1.2	-	12.50	-0.19	124	520	77	72
83	14.347	0.179	0.081	3.18	94	1.2	-	12.31	-0.19	124	515	77	72
84	14.527	0.180	0.080	3.18	94	1.2	-	12.14	-0.17	124	514	77	72
85	14.711	0.184	0.078	3.19	95	1.2	-	11.97	-0.17	124	506	77	72
86	14.888	0.177	0.079	3.19	95	1.2	-	11.80	-0.17	124	508	77	72
87	15.072	0.184	0.083	3.19	95	1.2	-	11.64	-0.16	123	505	77	72
88	15.247	0.175	0.081	3.19	95	1.2	-	11.49	-0.15	123	501	77	72
89	15.427	0.180	0.080	3.20	95	1.2	-	11.34	-0.15	122	498	77	72
90	15.609	0.182	0.081	3.20	95	1.2	102	11.17	-0.17	122	490	76	72
91	15.790	0.181	0.080	3.20	95	1.2	-	11.04	-0.13	122	483	76	72
92	15.971	0.181	0.080	3.21	96	1.2	-	10.88	-0.16	121	481	76	72
93	16.149	0.178	0.083	3.20	96	1.2	-	10.72	-0.16	121	478	76	72
94	16.329	0.180	0.080	3.20	96	1.2	-	10.58	-0.14	121	477	76	72
95	16.514	0.185	0.079	3.21	96	1.2	-	10.42	-0.16	120	475	76	72

BOX A TEST DATA - ASTM E2780 / ASTM E2515

Client: HHT
Model: Pioneer III
Run #: 1

Job #: 24-253
Tracking #: 180
Technician: SJB
Date: 2/6/2024

	Particulate Sampling Data							Fuel Weight (lb)		Temperature Data (°F)			
Elapsed Time (min)	Gas Meter (ft^3)	Sample Rate (cfm)	Dilution Tunnel dP (in H_2O)	Orifice dH (in H_2O)	Meter Temp (°F)	Meter Vacuum (in Hg)	Pro. Rate (%)	Scale Reading	Weight Change	Dilution Tunnel	Flue	Filter	Ambient
96	16.694	0.180	0.081	3.20	96	1.2	-	10.28	-0.14	120	475	76	72
97	16.875	0.181	0.080	3.21	96	1.2	-	10.12	-0.16	120	474	76	72
98	17.056	0.181	0.081	3.22	96	1.2	-	9.98	-0.14	120	474	76	72
99	17.236	0.180	0.081	3.21	96	1.2	-	9.84	-0.14	120	472	76	72
100	17.416	0.180	0.079	3.22	97	1.1	102	9.70	-0.14	119	469	76	72
101	17.599	0.183	0.079	3.22	97	1.2	-	9.56	-0.14	119	466	76	72
102	17.782	0.183	0.080	3.22	97	1.2	-	9.42	-0.14	119	462	76	72
103	17.962	0.180	0.080	3.21	97	1.2	-	9.28	-0.14	118	458	76	72
104	18.140	0.178	0.080	3.22	97	1.2	-	9.15	-0.13	118	456	76	72
105	18.322	0.182	0.082	3.22	97	1.1	-	9.02	-0.13	117	452	76	72
106	18.504	0.182	0.080	3.23	97	1.2	-	8.88	-0.14	117	448	76	72
107	18.686	0.182	0.079	3.23	97	1.2	-	8.76	-0.12	117	448	76	72
108	18.871	0.185	0.082	3.23	97	1.1	-	8.63	-0.13	116	445	76	72
109	19.048	0.177	0.080	3.22	97	1.2	-	8.51	-0.12	116	443	76	72
110	19.229	0.181	0.081	3.25	98	1.1	102	8.38	-0.13	116	443	77	72
111	19.412	0.183	0.080	3.23	98	1.2	-	8.26	-0.12	116	443	77	72
112	19.599	0.187	0.080	3.24	98	1.1	-	8.12	-0.14	116	445	77	72
113	19.778	0.179	0.082	3.25	98	1.1	-	7.99	-0.13	116	450	77	72
114	19.957	0.179	0.082	3.25	98	1.2	-	7.87	-0.12	116	456	77	72
115	20.142	0.185	0.080	3.25	98	1.2	-	7.75	-0.12	116	456	77	72
116	20.322	0.180	0.080	3.25	98	1.2	-	7.62	-0.13	116	459	77	72
117	20.504	0.182	0.079	3.25	98	1.2	-	7.50	-0.12	116	459	77	72
118	20.691	0.187	0.080	3.25	98	1.2	-	7.39	-0.11	116	458	77	72
119	20.870	0.179	0.080	3.26	98	1.2	-	7.27	-0.12	116	458	77	72
120	21.050	0.180	0.079	3.24	98	1.2	102	7.15	-0.12	116	458	77	72
121	21.231	0.181	0.080	3.25	99	1.1	-	7.04	-0.11	116	456	77	72
122	21.416	0.185	0.081	3.24	99	1.2	-	6.93	-0.11	116	453	77	72
123	21.600	0.184	0.080	3.26	99	1.1	-	6.82	-0.11	115	449	77	72
124	21.782	0.182	0.079	3.26	99	1.1	-	6.71	-0.11	115	448	77	72
125	21.967	0.185	0.080	3.25	99	1.2	-	6.62	-0.09	115	445	77	72
126	22.148	0.181	0.080	3.26	99	1.2	-	6.52	-0.10	115	445	77	72
127	22.326	0.178	0.083	3.26	99	1.2	-	6.42	-0.10	114	442	77	72

BOX A TEST DATA - ASTM E2780 / ASTM E2515

Client: HHT
Model: Pioneer III
Run #: 1

Job #: 24-253
Tracking #: 180
Technician: SJB
Date: 2/6/2024

	Particulate Sampling Data							Fuel Weight (lb)		Temperature Data (°F)			
Elapsed Time (min)	Gas Meter (ft^3)	Sample Rate (cfm)	Dilution Tunnel dP (in H_2O)	Orifice dH (in H_2O)	Meter Temp (°F)	Meter Vacuum (in Hg)	Pro. Rate (%)	Scale Reading	Weight Change	Dilution Tunnel	Flue	Filter	Ambient
128	22.511	0.185	0.081	3.27	99	1.2	-	6.32	-0.10	114	442	77	72
129	22.699	0.188	0.081	3.26	99	1.2	-	6.23	-0.09	114	439	77	72
130	22.881	0.182	0.081	3.27	99	1.2	103	6.13	-0.10	114	441	77	72
131	23.063	0.182	0.080	3.26	99	1.2	-	6.04	-0.09	114	444	77	72
132	23.241	0.178	0.081	3.25	99	1.1	-	5.95	-0.09	114	445	77	72
133	23.426	0.185	0.081	3.27	99	1.1	-	5.86	-0.09	114	444	77	72
134	23.611	0.185	0.080	3.27	99	1.2	-	5.75	-0.11	114	441	77	72
135	23.796	0.185	0.081	3.26	100	1.2	-	5.66	-0.09	114	453	77	72
136	23.978	0.182	0.081	3.28	100	1.2	-	5.57	-0.09	114	454	77	72
137	24.160	0.182	0.081	3.27	100	1.2	-	5.48	-0.09	114	450	77	72
138	24.342	0.182	0.082	3.27	100	1.2	-	5.41	-0.07	114	445	77	72
139	24.522	0.180	0.081	3.28	100	1.2	-	5.33	-0.08	113	438	77	72
140	24.706	0.184	0.081	3.27	100	1.2	102	5.25	-0.08	113	435	78	72
141	24.891	0.185	0.079	3.27	100	1.2	-	5.18	-0.07	113	429	78	72
142	25.074	0.183	0.081	3.27	100	1.2	-	5.10	-0.08	112	421	78	72
143	25.255	0.181	0.079	3.27	100	1.2	-	5.03	-0.07	111	414	78	72
144	25.438	0.183	0.082	3.27	100	1.2	-	4.97	-0.06	111	406	78	72
145	25.624	0.186	0.080	3.27	100	1.1	-	4.90	-0.07	110	399	78	72
146	25.809	0.185	0.081	3.27	100	1.1	-	4.84	-0.06	110	395	78	72
147	25.991	0.182	0.082	3.28	100	1.1	-	4.78	-0.06	109	391	78	72
148	26.174	0.183	0.082	3.28	100	1.2	-	4.73	-0.05	108	388	77	72
149	26.355	0.181	0.083	3.27	100	1.2	-	4.67	-0.06	108	383	77	72
150	26.542	0.187	0.081	3.28	100	1.1	102	4.62	-0.05	107	377	77	72
151	26.724	0.182	0.082	3.28	100	1.2	-	4.57	-0.05	107	373	77	72
152	26.906	0.182	0.081	3.27	101	1.1	-	4.52	-0.05	106	369	77	72
153	27.092	0.186	0.079	3.28	101	1.1	-	4.48	-0.04	106	365	77	72
154	27.274	0.182	0.079	3.29	101	1.2	-	4.43	-0.05	105	362	77	72
155	27.457	0.183	0.080	3.28	101	1.2	-	4.38	-0.05	105	358	77	72
156	27.640	0.183	0.082	3.27	101	1.2	-	4.34	-0.04	104	355	77	72
157	27.826	0.186	0.079	3.27	101	1.1	-	4.30	-0.04	104	352	77	72
158	28.012	0.186	0.080	3.28	101	1.2	-	4.26	-0.04	103	350	77	72
159	28.194	0.182	0.081	3.28	101	1.2	-	4.21	-0.05	103	349	77	72

BOX A TEST DATA - ASTM E2780 / ASTM E2515

Client: HHT
Model: Pioneer III
Run #: 1

Job #: 24-253
Tracking #: 180
Technician: SJB
Date: 2/6/2024

	Particulate Sampling Data							Fuel Weight (lb)		Temperature Data (°F)			
Elapsed Time (min)	Gas Meter (ft^3)	Sample Rate (cfm)	Dilution Tunnel dP (in H_2O)	Orifice dH (in H_2O)	Meter Temp (°F)	Meter Vacuum (in Hg)	Pro. Rate (%)	Scale Reading	Weight Change	Dilution Tunnel	Flue	Filter	Ambient
160	28.377	0.183	0.082	3.27	101	1.1	101	4.18	-0.03	103	347	77	72
161	28.560	0.183	0.080	3.27	101	1.2	-	4.14	-0.04	103	346	77	72
162	28.745	0.185	0.081	3.26	101	1.1	-	4.09	-0.05	103	346	77	72
163	28.928	0.183	0.079	3.27	101	1.1	-	4.06	-0.03	102	344	77	72
164	29.111	0.183	0.081	3.27	101	1.1	-	4.01	-0.05	102	344	76	72
165	29.298	0.187	0.080	3.28	101	1.2	-	3.98	-0.03	102	342	76	72
166	29.484	0.186	0.080	3.28	101	1.2	-	3.93	-0.05	102	342	76	72
167	29.664	0.180	0.080	3.28	101	1.2	-	3.90	-0.03	101	337	76	72
168	29.849	0.185	0.080	3.28	101	1.2	-	3.90	0.00	96	286	76	72
169	30.032	0.183	0.079	3.28	101	1.2	-	3.89	-0.01	94	261	76	71
170	30.217	0.185	0.080	3.27	101	1.1	101	3.88	-0.01	93	248	76	72
171	30.401	0.184	0.080	3.27	101	1.2	-	3.87	-0.01	92	240	75	72
172	30.584	0.183	0.080	3.27	101	1.2	-	3.84	-0.03	91	234	75	72
173	30.769	0.185	0.081	3.28	101	1.2	-	3.84	0.00	91	229	75	72
174	30.950	0.181	0.082	3.29	101	1.1	-	3.82	-0.02	91	224	75	71
175	31.137	0.187	0.081	3.28	101	1.1	-	3.81	-0.01	90	219	75	71
176	31.320	0.183	0.082	3.28	101	1.2	-	3.81	0.00	90	216	75	72
177	31.502	0.182	0.081	3.25	101	1.2	-	3.78	-0.03	89	214	75	72
178	31.689	0.187	0.081	3.28	101	1.2	-	3.77	-0.01	89	211	74	71
179	31.875	0.186	0.081	3.27	101	1.2	-	3.76	-0.01	89	208	74	71
180	32.060	0.185	0.081	3.28	102	1.2	100	3.75	-0.01	88	206	74	71
181	32.239	0.179	0.084	3.26	102	1.2	-	3.74	-0.01	88	204	74	71
182	32.422	0.183	0.083	3.28	101	1.2	-	3.72	-0.02	87	202	74	71
183	32.608	0.186	0.083	3.27	102	1.2	-	3.71	-0.01	87	201	74	71
184	32.793	0.185	0.082	3.28	102	1.2	-	3.70	-0.01	87	197	74	71
185	32.982	0.189	0.084	3.27	102	1.2	-	3.69	-0.01	86	196	74	71
186	33.163	0.181	0.085	3.27	102	1.2	-	3.67	-0.02	86	195	74	71
187	33.348	0.185	0.083	3.28	102	1.2	-	3.66	-0.01	86	194	73	71
188	33.533	0.185	0.084	3.28	102	1.2	-	3.65	-0.01	86	192	73	71
189	33.714	0.181	0.081	3.27	102	1.1	-	3.63	-0.02	86	191	73	71
190	33.902	0.188	0.082	3.27	102	1.2	99	3.62	-0.01	85	189	73	71
191	34.088	0.186	0.083	3.28	102	1.1	-	3.61	-0.01	85	186	73	71

BOX A TEST DATA - ASTM E2780 / ASTM E2515

Client: HHT
Model: Pioneer III
Run #: 1

Job #: 24-253
Tracking #: 180
Technician: SJB
Date: 2/6/2024

	Particulate Sampling Data							Fuel Weight (lb)		Temperature Data (°F)			
Elapsed Time (min)	Gas Meter (ft^3)	Sample Rate (cfm)	Dilution Tunnel dP (in H_2O)	Orifice dH (in H_2O)	Meter Temp (°F)	Meter Vacuum (in Hg)	Pro. Rate (%)	Scale Reading	Weight Change	Dilution Tunnel	Flue	Filter	Ambient
192	34.269	0.181	0.080	3.28	102	1.2	-	3.61	0.00	85	185	73	71
193	34.452	0.183	0.083	3.26	102	1.2	-	3.60	-0.01	85	185	73	70
194	34.639	0.187	0.082	3.26	102	1.2	-	3.58	-0.02	85	184	73	71
195	34.822	0.183	0.080	3.25	102	1.2	-	3.56	-0.02	85	183	73	71
196	35.009	0.187	0.081	3.23	102	1.2	-	3.55	-0.01	84	182	73	70
197	35.193	0.184	0.081	3.24	102	1.1	-	3.54	-0.01	84	181	73	70
198	35.376	0.183	0.083	3.22	102	1.1	-	3.53	-0.01	84	180	73	70
199	35.561	0.185	0.083	3.25	102	1.1	-	3.53	0.00	84	179	73	70
200	35.743	0.182	0.082	3.27	102	1.1	99	3.51	-0.02	84	180	73	70
201	35.927	0.184	0.082	3.25	102	1.2	-	3.50	-0.01	84	179	73	71
202	36.115	0.188	0.083	3.26	102	1.2	-	3.48	-0.02	83	180	72	70
203	36.301	0.186	0.082	3.26	102	1.1	-	3.47	-0.01	83	179	72	70
204	36.488	0.187	0.082	3.26	102	1.2	-	3.46	-0.01	83	178	72	70
205	36.668	0.180	0.083	3.26	102	1.2	-	3.44	-0.02	83	178	72	70
206	36.853	0.185	0.083	3.26	102	1.2	-	3.43	-0.01	83	178	72	70
207	37.036	0.183	0.081	3.27	102	1.2	-	3.42	-0.01	83	178	72	70
208	37.219	0.183	0.083	3.27	102	1.1	-	3.41	-0.01	83	176	72	70
209	37.409	0.190	0.081	3.27	102	1.2	-	3.40	-0.01	83	176	72	70
210	37.594	0.185	0.084	3.29	102	1.2	99	3.39	-0.01	83	177	72	71
211	37.777	0.183	0.081	3.28	102	1.2	-	3.38	-0.01	83	177	72	71
212	37.964	0.187	0.082	3.28	102	1.1	-	3.37	-0.01	82	175	72	70
213	38.143	0.179	0.083	3.28	102	1.2	-	3.35	-0.02	82	176	72	70
214	38.331	0.188	0.082	3.29	102	1.2	-	3.35	0.00	82	176	72	70
215	38.515	0.184	0.082	3.30	102	1.2	-	3.32	-0.03	82	175	72	70
216	38.698	0.183	0.082	3.29	102	1.1	-	3.32	0.00	82	176	72	70
217	38.885	0.187	0.082	3.29	102	1.1	-	3.30	-0.02	82	175	72	70
218	39.069	0.184	0.082	3.29	102	1.2	-	3.29	-0.01	82	175	72	70
219	39.257	0.188	0.081	3.28	102	1.2	-	3.27	-0.02	82	175	72	70
220	39.438	0.181	0.082	3.29	102	1.2	98	3.27	0.00	82	175	71	70
221	39.619	0.181	0.081	3.29	102	1.2	-	3.26	-0.01	82	174	71	70
222	39.806	0.187	0.082	3.27	102	1.2	-	3.24	-0.02	82	174	71	70
223	39.994	0.188	0.082	3.30	102	1.2	-	3.23	-0.01	82	174	71	70

BOX A TEST DATA - ASTM E2780 / ASTM E2515

Client: HHT
Model: Pioneer III
Run #: 1

Job #: 24-253
Tracking #: 180
Technician: SJB
Date: 2/6/2024

	Particulate Sampling Data							Fuel Weight (lb)		Temperature Data (°F)			
Elapsed Time (min)	Gas Meter (ft^3)	Sample Rate (cfm)	Dilution Tunnel dP (in H_2O)	Orifice dH (in H_2O)	Meter Temp (°F)	Meter Vacuum (in Hg)	Pro. Rate (%)	Scale Reading	Weight Change	Dilution Tunnel	Flue	Filter	Ambient
224	40.177	0.183	0.081	3.28	102	1.2	-	3.22	-0.01	82	174	71	70
225	40.362	0.185	0.082	3.29	102	1.1	-	3.21	-0.01	82	173	71	70
226	40.544	0.182	0.082	3.29	102	1.2	-	3.19	-0.02	82	172	71	70
227	40.729	0.185	0.081	3.28	102	1.2	-	3.19	0.00	82	172	71	70
228	40.916	0.187	0.082	3.30	102	1.2	-	3.17	-0.02	82	172	71	70
229	41.102	0.186	0.082	3.29	102	1.1	-	3.15	-0.02	82	172	71	70
230	41.287	0.185	0.081	3.29	102	1.2	99	3.14	-0.01	81	172	71	70
231	41.473	0.186	0.083	3.29	102	1.1	-	3.13	-0.01	81	171	71	70
232	41.654	0.181	0.082	3.29	102	1.2	-	3.11	-0.02	81	171	71	70
233	41.840	0.186	0.082	3.29	102	1.2	-	3.11	0.00	81	170	71	70
234	42.020	0.180	0.082	3.29	102	1.2	-	3.09	-0.02	81	170	71	70
235	42.207	0.187	0.082	3.28	102	1.2	-	3.07	-0.02	81	171	71	70
236	42.394	0.187	0.082	3.28	102	1.1	-	3.05	-0.02	81	170	71	70
237	42.581	0.187	0.082	3.28	102	1.2	-	3.04	-0.01	81	171	71	70
238	42.765	0.184	0.081	3.29	102	1.1	-	3.03	-0.01	81	171	71	70
239	42.946	0.181	0.081	3.28	102	1.2	-	3.01	-0.02	81	171	71	70
240	43.130	0.184	0.082	3.27	102	1.2	99	3.00	-0.01	81	171	71	70
241	43.316	0.186	0.082	3.28	102	1.2	-	2.98	-0.02	81	170	71	70
242	43.500	0.184	0.081	3.28	102	1.1	-	2.97	-0.01	81	171	71	70
243	43.688	0.188	0.082	3.30	102	1.2	-	2.96	-0.01	81	169	71	70
244	43.871	0.183	0.083	3.28	102	1.2	-	2.95	-0.01	81	169	71	70
245	44.059	0.188	0.083	3.28	102	1.2	-	2.93	-0.02	81	169	70	70
246	44.238	0.179	0.081	3.29	102	1.2	-	2.91	-0.02	81	170	70	70
247	44.426	0.188	0.082	3.28	102	1.2	-	2.90	-0.01	81	171	70	70
248	44.607	0.181	0.081	3.29	102	1.2	-	2.88	-0.02	81	170	70	70
249	44.796	0.189	0.080	3.28	102	1.1	-	2.87	-0.01	81	170	70	70
250	44.983	0.187	0.081	3.28	102	1.1	99	2.85	-0.02	80	170	70	70
251	45.163	0.180	0.082	3.29	102	1.2	-	2.83	-0.02	80	169	70	70
252	45.351	0.188	0.082	3.29	102	1.1	-	2.82	-0.01	80	168	70	70
253	45.531	0.180	0.081	3.28	102	1.1	-	2.81	-0.01	80	167	70	70
254	45.718	0.187	0.083	3.28	102	1.2	-	2.80	-0.01	80	167	70	70
255	45.901	0.183	0.083	3.28	102	1.1	-	2.78	-0.02	80	167	70	70

BOX A TEST DATA - ASTM E2780 / ASTM E2515

Client: HHT
Model: Pioneer III
Run #: 1

Job #: 24-253
Tracking #: 180
Technician: SJB
Date: 2/6/2024

	Particulate Sampling Data							Fuel Weight (lb)		Temperature Data (°F)			
Elapsed Time (min)	Gas Meter (ft^3)	Sample Rate (cfm)	Dilution Tunnel dP (in H_2O)	Orifice dH (in H_2O)	Meter Temp (°F)	Meter Vacuum (in Hg)	Pro. Rate (%)	Scale Reading	Weight Change	Dilution Tunnel	Flue	Filter	Ambient
256	46.089	0.188	0.080	3.29	102	1.2	-	2.77	-0.01	80	166	70	70
257	46.273	0.184	0.082	3.27	102	1.2	-	2.76	-0.01	80	165	70	70
258	46.460	0.187	0.081	3.28	102	1.2	-	2.74	-0.02	80	164	70	70
259	46.639	0.179	0.082	3.29	102	1.2	-	2.73	-0.01	80	164	70	70
260	46.827	0.188	0.082	3.27	102	1.1	99	2.71	-0.02	80	164	70	70
261	47.011	0.184	0.083	3.28	102	1.2	-	2.70	-0.01	80	164	70	70
262	47.195	0.184	0.081	3.28	102	1.2	-	2.69	-0.01	80	164	70	70
263	47.383	0.188	0.081	3.29	102	1.1	-	2.67	-0.02	80	164	70	70
264	47.565	0.182	0.081	3.28	102	1.1	-	2.67	0.00	80	165	70	70
265	47.750	0.185	0.083	3.28	102	1.1	-	2.65	-0.02	79	164	70	70
266	47.932	0.182	0.081	3.28	102	1.1	-	2.63	-0.02	79	164	70	70
267	48.120	0.188	0.082	3.28	102	1.2	-	2.61	-0.02	79	164	70	70
268	48.305	0.185	0.081	3.28	102	1.2	-	2.60	-0.01	79	165	70	69
269	48.490	0.185	0.082	3.28	102	1.2	-	2.58	-0.02	79	165	70	69
270	48.677	0.187	0.081	3.28	102	1.2	99	2.56	-0.02	79	164	70	69
271	48.861	0.184	0.081	3.29	102	1.1	-	2.55	-0.01	79	163	70	69
272	49.041	0.180	0.080	3.29	102	1.1	-	2.54	-0.01	79	164	70	69
273	49.229	0.188	0.082	3.29	102	1.1	-	2.53	-0.01	79	164	70	69
274	49.409	0.180	0.081	3.29	102	1.1	-	2.50	-0.03	79	165	70	69
275	49.596	0.187	0.083	3.28	102	1.2	-	2.49	-0.01	79	165	70	69
276	49.781	0.185	0.082	3.29	102	1.1	-	2.48	-0.01	79	164	70	69
277	49.966	0.185	0.082	3.28	102	1.1	-	2.46	-0.02	79	163	70	69
278	50.155	0.189	0.083	3.29	102	1.1	-	2.45	-0.01	79	163	70	69
279	50.334	0.179	0.083	3.30	102	1.1	-	2.44	-0.01	79	163	70	69
280	50.522	0.188	0.081	3.28	102	1.2	99	2.42	-0.02	79	164	70	69
281	50.703	0.181	0.082	3.30	102	1.2	-	2.41	-0.01	79	164	70	69
282	50.888	0.185	0.082	3.28	102	1.1	-	2.39	-0.02	79	164	70	69
283	51.078	0.190	0.081	3.29	102	1.2	-	2.38	-0.01	79	164	69	69
284	51.259	0.181	0.082	3.29	102	1.2	-	2.36	-0.02	78	165	69	69
285	51.443	0.184	0.081	3.28	102	1.2	-	2.35	-0.01	78	164	69	69
286	51.629	0.186	0.082	3.30	102	1.1	-	2.34	-0.01	78	164	69	69
287	51.810	0.181	0.081	3.29	102	1.2	-	2.31	-0.03	78	164	69	69

BOX A TEST DATA - ASTM E2780 / ASTM E2515

Client: HHT
Model: Pioneer III
Run #: 1

Job #: 24-253
Tracking #: 180
Technician: SJB
Date: 2/6/2024

	Particulate Sampling Data							Fuel Weight (lb)		Temperature Data (°F)			
Elapsed Time (min)	Gas Meter (ft^3)	Sample Rate (cfm)	Dilution Tunnel dP (in H_2O)	Orifice dH (in H_2O)	Meter Temp (°F)	Meter Vacuum (in Hg)	Pro. Rate (%)	Scale Reading	Weight Change	Dilution Tunnel	Flue	Filter	Ambient
288	51.997	0.187	0.082	3.29	101	1.2	-	2.30	-0.01	78	164	69	69
289	52.185	0.188	0.081	3.29	102	1.2	-	2.29	-0.01	78	165	69	69
290	52.368	0.183	0.081	3.28	102	1.2	99	2.27	-0.02	78	166	69	69
291	52.553	0.185	0.082	3.30	102	1.2	-	2.26	-0.01	78	164	69	69
292	52.734	0.181	0.083	3.29	101	1.2	-	2.24	-0.02	78	164	69	69
293	52.919	0.185	0.082	3.29	102	1.2	-	2.23	-0.01	78	164	69	69
294	53.106	0.187	0.082	3.29	101	1.2	-	2.22	-0.01	78	162	69	69
295	53.289	0.183	0.082	3.29	101	1.1	-	2.20	-0.02	78	162	69	69
296	53.478	0.189	0.083	3.30	101	1.1	-	2.19	-0.01	78	161	69	69
297	53.660	0.182	0.081	3.29	101	1.1	-	2.17	-0.02	78	161	69	69
298	53.848	0.188	0.082	3.28	101	1.1	-	2.17	0.00	78	160	69	69
299	54.027	0.179	0.084	3.29	101	1.2	-	2.16	-0.01	78	159	69	69
300	54.214	0.187	0.082	3.28	101	1.2	99	2.13	-0.03	78	160	69	69
301	54.397	0.183	0.082	3.29	101	1.1	-	2.12	-0.01	78	161	69	69
302	54.585	0.188	0.081	3.29	101	1.1	-	2.10	-0.02	78	161	69	69
303	54.769	0.184	0.081	3.28	101	1.1	-	2.10	0.00	78	161	69	69
304	54.953	0.184	0.082	3.29	101	1.1	-	2.07	-0.03	78	160	69	69
305	55.135	0.182	0.081	3.29	101	1.1	-	2.07	0.00	78	159	69	69
306	55.320	0.185	0.082	3.28	101	1.2	-	2.05	-0.02	78	158	69	69
307	55.507	0.187	0.083	3.28	101	1.1	-	2.04	-0.01	78	158	69	69
308	55.690	0.183	0.083	3.28	101	1.2	-	2.03	-0.01	77	159	69	69
309	55.879	0.189	0.082	3.28	101	1.2	-	2.01	-0.02	77	159	69	69
310	56.065	0.186	0.082	3.27	101	1.1	99	2.00	-0.01	77	159	69	69
311	56.246	0.181	0.082	3.27	101	1.2	-	1.99	-0.01	77	158	69	69
312	56.427	0.181	0.083	3.27	101	1.1	-	1.98	-0.01	78	157	69	69
313	56.613	0.186	0.076	3.27	101	1.2	-	1.97	-0.01	78	157	69	69
314	56.798	0.185	0.084	3.27	101	1.1	-	1.96	-0.01	78	158	69	69
315	56.986	0.188	0.083	3.28	101	1.1	-	1.94	-0.02	78	156	69	69
316	57.170	0.184	0.080	3.27	101	1.2	-	1.93	-0.01	78	156	69	69
317	57.357	0.187	0.080	3.29	101	1.1	-	1.91	-0.02	78	157	69	69
318	57.538	0.181	0.083	3.26	101	1.2	-	1.90	-0.01	78	156	69	69
319	57.721	0.183	0.083	3.25	101	1.1	-	1.89	-0.01	78	155	69	69

BOX A TEST DATA - ASTM E2780 / ASTM E2515

Client: HHT
Model: Pioneer III
Run #: 1

Job #: 24-253
Tracking #: 180
Technician: SJB
Date: 2/6/2024

	Particulate Sampling Data							Fuel Weight (lb)		Temperature Data (°F)			
Elapsed Time (min)	Gas Meter (ft^3)	Sample Rate (cfm)	Dilution Tunnel dP (in H_2O)	Orifice dH (in H_2O)	Meter Temp (°F)	Meter Vacuum (in Hg)	Pro. Rate (%)	Scale Reading	Weight Change	Dilution Tunnel	Flue	Filter	Ambient
320	57.907	0.186	0.081	3.25	101	1.2	99	1.87	-0.02	78	155	68	69
321	58.091	0.184	0.082	3.26	101	1.1	-	1.86	-0.01	78	155	68	69
322	58.277	0.186	0.083	3.22	101	1.1	-	1.85	-0.01	78	155	68	69
323	58.466	0.189	0.081	3.24	101	1.1	-	1.84	-0.01	77	154	68	69
324	58.648	0.182	0.081	3.23	101	1.2	-	1.82	-0.02	77	155	68	69
325	58.832	0.184	0.082	3.25	101	1.2	-	1.82	0.00	77	155	68	69
326	59.014	0.182	0.083	3.24	101	1.2	-	1.80	-0.02	77	154	68	69
327	59.201	0.187	0.081	3.26	101	1.1	-	1.79	-0.01	77	154	68	69
328	59.387	0.186	0.082	3.24	101	1.2	-	1.78	-0.01	77	154	68	69
329	59.571	0.184	0.082	3.23	101	1.1	-	1.76	-0.02	77	155	68	69
330	59.755	0.184	0.082	3.24	101	1.1	99	1.73	-0.03	77	154	68	69
331	59.942	0.187	0.082	3.22	101	1.1	-	1.74	0.01	77	155	68	69
332	60.124	0.182	0.078	3.26	101	1.1	-	1.72	-0.02	78	155	68	68
333	60.309	0.185	0.082	3.23	101	1.2	-	1.71	-0.01	78	155	68	68
334	60.492	0.183	0.082	3.24	101	1.1	-	1.69	-0.02	78	155	68	68
335	60.677	0.185	0.082	3.26	101	1.1	-	1.68	-0.01	78	155	68	68
336	60.866	0.189	0.081	3.25	101	1.1	-	1.67	-0.01	78	154	68	68
337	61.050	0.184	0.081	3.26	101	1.2	-	1.65	-0.02	77	155	68	69
338	61.230	0.180	0.082	3.26	101	1.2	-	1.64	-0.01	77	154	68	68
339	61.414	0.184	0.081	3.25	101	1.2	-	1.62	-0.02	77	155	68	68
340	61.598	0.184	0.083	3.27	101	1.1	98	1.61	-0.01	77	155	68	68
341	61.785	0.187	0.081	3.26	101	1.2	-	1.60	-0.01	77	156	68	68
342	61.971	0.186	0.081	3.27	101	1.2	-	1.58	-0.02	77	155	68	68
343	62.155	0.184	0.083	3.27	101	1.1	-	1.57	-0.01	77	155	68	68
344	62.344	0.189	0.082	3.26	101	1.1	-	1.54	-0.03	77	155	68	68
345	62.526	0.182	0.082	3.28	101	1.1	-	1.54	0.00	77	155	68	68
346	62.707	0.181	0.081	3.26	101	1.2	-	1.54	0.00	77	155	68	68
347	62.893	0.186	0.077	3.28	101	1.2	-	1.52	-0.02	78	155	68	68
348	63.077	0.184	0.080	3.25	101	1.2	-	1.51	-0.01	78	155	68	68
349	63.264	0.187	0.084	3.27	101	1.1	-	1.49	-0.02	78	155	68	68
350	63.448	0.184	0.082	3.29	101	1.1	98	1.47	-0.02	78	155	68	68
351	63.631	0.183	0.079	3.27	101	1.1	-	1.46	-0.01	77	154	68	68

BOX A TEST DATA - ASTM E2780 / ASTM E2515

Client: HHT
Model: Pioneer III
Run #: 1

Job #: 24-253
Tracking #: 180
Technician: SJB
Date: 2/6/2024

	Particulate Sampling Data							Fuel Weight (lb)		Temperature Data (°F)			
Elapsed Time (min)	Gas Meter (ft^3)	Sample Rate (cfm)	Dilution Tunnel dP (in H_2O)	Orifice dH (in H_2O)	Meter Temp (°F)	Meter Vacuum (in Hg)	Pro. Rate (%)	Scale Reading	Weight Change	Dilution Tunnel	Flue	Filter	Ambient
352	63.815	0.184	0.082	3.26	101	1.2	-	1.45	-0.01	77	155	68	68
353	63.999	0.184	0.081	3.27	101	1.2	-	1.43	-0.02	77	156	68	68
354	64.188	0.189	0.081	3.28	101	1.2	-	1.41	-0.02	77	156	68	68
355	64.373	0.185	0.081	3.27	101	1.2	-	1.41	0.00	77	156	68	68
356	64.559	0.186	0.083	3.26	101	1.1	-	1.40	-0.01	77	156	68	68
357	64.744	0.185	0.078	3.28	101	1.1	-	1.39	-0.01	78	155	68	68
358	64.922	0.178	0.083	3.27	101	1.2	-	1.37	-0.02	78	155	68	68
359	65.107	0.185	0.081	3.27	101	1.1	-	1.36	-0.01	78	155	68	68
360	65.292	0.185	0.081	3.28	101	1.1	99	1.34	-0.02	78	154	68	68
361	65.480	0.188	0.081	3.26	101	1.2	-	1.34	0.00	77	154	68	68
362	65.666	0.186	0.080	3.26	101	1.1	-	1.32	-0.02	77	153	68	68
363	65.847	0.181	0.080	3.26	101	1.2	-	1.31	-0.01	77	154	68	68
364	66.030	0.183	0.080	3.26	101	1.1	-	1.29	-0.02	77	154	68	68
365	66.216	0.186	0.081	3.26	101	1.1	-	1.28	-0.01	77	155	68	68
366	66.399	0.183	0.077	3.26	101	1.1	-	1.27	-0.01	78	155	68	68
367	66.583	0.184	0.081	3.27	101	1.2	-	1.24	-0.03	78	155	68	68
368	66.770	0.187	0.082	3.27	101	1.2	-	1.24	0.00	78	154	68	68
369	66.955	0.185	0.079	3.28	101	1.2	-	1.22	-0.02	78	154	68	68
370	67.140	0.185	0.081	3.25	101	1.1	99	1.20	-0.02	77	154	68	68
371	67.318	0.178	0.080	3.24	101	1.1	-	1.18	-0.02	77	154	68	68
372	67.502	0.184	0.080	3.27	101	1.1	-	1.17	-0.01	77	154	68	68
373	67.688	0.186	0.082	3.27	101	1.1	-	1.16	-0.01	77	153	68	68
374	67.873	0.185	0.080	3.27	101	1.1	-	1.15	-0.01	77	154	68	68
375	68.062	0.189	0.080	3.28	101	1.1	-	1.14	-0.01	77	155	68	68
376	68.243	0.181	0.081	3.28	101	1.1	-	1.11	-0.03	77	155	68	68
377	68.429	0.186	0.078	3.27	101	1.2	-	1.12	0.01	78	154	68	68
378	68.609	0.180	0.083	3.27	101	1.2	-	1.10	-0.02	78	154	68	68
379	68.792	0.183	0.082	3.26	101	1.2	-	1.08	-0.02	78	154	68	68
380	68.981	0.189	0.080	3.28	101	1.1	99	1.07	-0.01	77	154	68	68
381	69.167	0.186	0.082	3.28	101	1.2	-	1.06	-0.01	77	154	68	68
382	69.348	0.181	0.080	3.28	101	1.1	-	1.05	-0.01	77	153	68	68
383	69.531	0.183	0.081	3.27	101	1.1	-	1.02	-0.03	77	154	68	68

BOX A TEST DATA - ASTM E2780 / ASTM E2515

Client: HHT
Model: Pioneer III
Run #: 1

Job #: 24-253
Tracking #: 180
Technician: SJB
Date: 2/6/2024

	Particulate Sampling Data							Fuel Weight (lb)		Temperature Data (°F)			
Elapsed Time (min)	Gas Meter (ft^3)	Sample Rate (cfm)	Dilution Tunnel dP (in H_2O)	Orifice dH (in H_2O)	Meter Temp (°F)	Meter Vacuum (in Hg)	Pro. Rate (%)	Scale Reading	Weight Change	Dilution Tunnel	Flue	Filter	Ambient
384	69.714	0.183	0.082	3.27	101	1.1	-	1.02	0.00	77	154	68	68
385	69.896	0.182	0.078	3.27	101	1.1	-	1.01	-0.01	78	154	68	68
386	70.085	0.189	0.081	3.27	101	1.2	-	1.00	-0.01	78	155	68	68
387	70.270	0.185	0.081	3.28	101	1.2	-	0.98	-0.02	78	155	68	68
388	70.455	0.185	0.080	3.26	101	1.2	-	0.96	-0.02	78	154	68	68
389	70.636	0.181	0.079	3.27	100	1.1	-	0.95	-0.01	77	154	68	68
390	70.817	0.181	0.081	3.28	100	1.1	99	0.94	-0.01	77	153	68	68
391	71.001	0.184	0.081	3.27	100	1.1	-	0.92	-0.02	77	153	68	68
392	71.187	0.186	0.081	3.29	100	1.1	-	0.91	-0.01	77	151	68	68
393	71.371	0.184	0.080	3.29	100	1.1	-	0.89	-0.02	78	151	68	68
394	71.559	0.188	0.077	3.27	100	1.2	-	0.89	0.00	78	151	68	68
395	71.742	0.183	0.080	3.27	100	1.1	-	0.87	-0.02	78	151	68	68
396	71.925	0.183	0.081	3.28	100	1.1	-	0.86	-0.01	78	150	68	68
397	72.109	0.184	0.078	3.27	100	1.2	-	0.85	-0.01	77	150	68	68
398	72.289	0.180	0.080	3.27	100	1.1	-	0.83	-0.02	77	150	68	68
399	72.474	0.185	0.080	3.27	100	1.1	-	0.83	0.00	77	150	68	68
400	72.660	0.186	0.081	3.27	100	1.1	99	0.81	-0.02	77	150	68	68
401	72.847	0.187	0.083	3.28	100	1.2	-	0.80	-0.01	77	149	68	68
402	73.027	0.180	0.080	3.27	100	1.2	-	0.78	-0.02	77	149	68	68
403	73.210	0.183	0.082	3.27	100	1.1	-	0.79	0.01	77	148	68	68
404	73.393	0.183	0.077	3.28	100	1.1	-	0.76	-0.03	78	147	68	68
405	73.581	0.188	0.081	3.28	100	1.1	-	0.76	0.00	78	147	68	68
406	73.766	0.185	0.082	3.28	100	1.1	-	0.74	-0.02	78	147	68	68
407	73.947	0.181	0.081	3.27	100	1.1	-	0.73	-0.01	77	147	68	68
408	74.131	0.184	0.078	3.27	100	1.1	-	0.72	-0.01	77	146	68	68
409	74.315	0.184	0.080	3.27	100	1.1	-	0.70	-0.02	77	145	68	68
410	74.499	0.184	0.081	3.27	100	1.1	99	0.70	0.00	77	145	68	68
411	74.681	0.182	0.082	3.26	100	1.1	-	0.68	-0.02	77	145	68	68
412	74.866	0.185	0.080	3.27	100	1.1	-	0.68	0.00	77	144	68	68
413	75.054	0.188	0.076	3.27	100	1.1	-	0.66	-0.02	77	145	68	68
414	75.235	0.181	0.082	3.27	100	1.2	-	0.65	-0.01	78	145	68	68
415	75.419	0.184	0.079	3.28	100	1.1	-	0.64	-0.01	77	144	68	68

BOX A TEST DATA - ASTM E2780 / ASTM E2515

Client: HHT
Model: Pioneer III
Run #: 1

Job #: 24-253
Tracking #: 180
Technician: SJB
Date: 2/6/2024

	Particulate Sampling Data							Fuel Weight (lb)		Temperature Data (°F)			
Elapsed Time (min)	Gas Meter (ft^3)	Sample Rate (cfm)	Dilution Tunnel dP (in H_2O)	Orifice dH (in H_2O)	Meter Temp (°F)	Meter Vacuum (in Hg)	Pro. Rate (%)	Scale Reading	Weight Change	Dilution Tunnel	Flue	Filter	Ambient
416	75.599	0.180	0.080	3.27	100	1.1	-	0.63	-0.01	77	144	67	68
417	75.784	0.185	0.080	3.27	100	1.2	-	0.61	-0.02	77	144	68	68
418	75.968	0.184	0.081	3.28	100	1.1	-	0.60	-0.01	77	145	68	68
419	76.157	0.189	0.082	3.27	100	1.1	-	0.59	-0.01	77	144	67	68
420	76.337	0.180	0.081	3.27	100	1.1	99	0.59	0.00	77	144	68	68
421	76.519	0.182	0.078	3.27	100	1.2	-	0.56	-0.03	77	144	67	68
422	76.702	0.183	0.079	3.27	100	1.1	-	0.56	0.00	77	143	68	68
423	76.888	0.186	0.081	3.27	100	1.1	-	0.54	-0.02	77	144	68	68
424	77.074	0.186	0.081	3.27	100	1.1	-	0.53	-0.01	77	143	67	68
425	77.256	0.182	0.080	3.27	100	1.1	-	0.51	-0.02	77	142	67	68
426	77.439	0.183	0.081	3.27	100	1.2	-	0.50	-0.01	77	142	68	68
427	77.626	0.187	0.081	3.27	100	1.1	-	0.49	-0.01	77	142	67	68
428	77.808	0.182	0.080	3.25	100	1.1	-	0.47	-0.02	76	142	67	68
429	77.988	0.180	0.082	3.27	100	1.1	-	0.47	0.00	77	142	67	68
430	78.173	0.185	0.079	3.27	100	1.1	99	0.46	-0.01	77	142	67	68
431	78.359	0.186	0.079	3.28	100	1.1	-	0.45	-0.01	77	142	67	67
432	78.542	0.183	0.082	3.27	100	1.1	-	0.44	-0.01	77	140	67	67
433	78.729	0.187	0.080	3.26	100	1.2	-	0.43	-0.01	77	139	67	67
434	78.907	0.178	0.079	3.27	99	1.1	-	0.42	-0.01	77	138	67	67
435	79.090	0.183	0.081	3.27	99	1.1	-	0.41	-0.01	77	137	67	68
436	79.275	0.185	0.081	3.26	99	1.1	-	0.41	0.00	77	137	67	68
437	79.462	0.187	0.081	3.28	100	1.1	-	0.40	-0.01	77	136	67	67
438	79.643	0.181	0.079	3.28	99	1.1	-	0.38	-0.02	77	136	67	67
439	79.827	0.184	0.081	3.27	99	1.1	-	0.38	0.00	77	136	67	67
440	80.011	0.184	0.082	3.27	99	1.1	99	0.37	-0.01	77	136	67	67
441	80.191	0.180	0.079	3.26	99	1.1	-	0.36	-0.01	77	136	67	67
442	80.377	0.186	0.080	3.26	99	1.2	-	0.35	-0.01	77	135	67	67
443	80.561	0.184	0.079	3.28	99	1.1	-	0.34	-0.01	76	134	67	67
444	80.745	0.184	0.081	3.26	99	1.1	-	0.33	-0.01	76	133	67	67
445	80.933	0.188	0.080	3.27	99	1.1	-	0.33	0.00	76	134	67	67
446	81.110	0.177	0.080	3.27	99	1.1	-	0.32	-0.01	76	134	67	67
447	81.293	0.183	0.079	3.27	99	1.2	-	0.31	-0.01	77	133	67	67

BOX A TEST DATA - ASTM E2780 / ASTM E2515

Client: HHT
Model: Pioneer III
Run #: 1

Job #: 24-253
Tracking #: 180
Technician: SJB
Date: 2/6/2024

	Particulate Sampling Data							Fuel Weight (lb)		Temperature Data (°F)			
Elapsed Time (min)	Gas Meter (ft^3)	Sample Rate (cfm)	Dilution Tunnel dP (in H_2O)	Orifice dH (in H_2O)	Meter Temp (°F)	Meter Vacuum (in Hg)	Pro. Rate (%)	Scale Reading	Weight Change	Dilution Tunnel	Flue	Filter	Ambient
448	81.479	0.186	0.078	3.27	99	1.1	-	0.31	0.00	77	134	67	67
449	81.663	0.184	0.082	3.28	99	1.1	-	0.30	-0.01	77	134	67	67
450	81.851	0.188	0.081	3.27	99	1.2	99	0.28	-0.02	77	134	67	67
451	82.032	0.181	0.078	3.27	99	1.1	-	0.28	0.00	77	134	67	67
452	82.212	0.180	0.081	3.28	99	1.1	-	0.26	-0.02	77	134	67	67
453	82.395	0.183	0.080	3.27	99	1.1	-	0.25	-0.01	76	135	67	67
454	82.582	0.187	0.082	3.27	99	1.1	-	0.25	0.00	76	135	67	67
455	82.764	0.182	0.080	3.27	99	1.2	-	0.23	-0.02	76	135	67	67
456	82.952	0.188	0.080	3.27	99	1.1	-	0.23	0.00	77	135	67	67
457	83.133	0.181	0.080	3.28	99	1.1	-	0.23	0.00	77	135	67	67
458	83.318	0.185	0.080	3.27	99	1.1	-	0.21	-0.02	77	134	67	67
459	83.498	0.180	0.082	3.27	99	1.2	-	0.19	-0.02	77	135	67	67
460	83.681	0.183	0.081	3.27	99	1.2	99	0.18	-0.01	77	135	67	67
461	83.865	0.184	0.080	3.27	99	1.2	-	0.18	0.00	77	134	67	67
462	84.054	0.189	0.081	3.27	99	1.1	-	0.17	-0.01	76	135	67	67
463	84.234	0.180	0.081	3.28	99	1.2	-	0.16	-0.01	76	135	67	67
464	84.420	0.186	0.079	3.27	99	1.1	-	0.15	-0.01	77	135	67	67
465	84.599	0.179	0.080	3.26	99	1.2	-	0.14	-0.01	77	135	67	67
466	84.785	0.186	0.080	3.27	99	1.2	-	0.13	-0.01	77	135	67	67
467	84.967	0.182	0.078	3.27	99	1.1	-	0.11	-0.02	77	135	67	67
468	85.152	0.185	0.080	3.27	99	1.2	-	0.11	0.00	77	134	67	67
469	85.335	0.183	0.081	3.28	99	1.2	-	0.10	-0.01	76	134	67	67
470	85.518	0.183	0.080	3.26	99	1.2	99	0.08	-0.02	76	134	67	67
471	85.701	0.183	0.082	3.28	99	1.1	-	0.09	0.01	77	135	67	67
472	85.886	0.185	0.078	3.25	99	1.1	-	0.07	-0.02	77	134	67	67
473	86.068	0.182	0.080	3.26	99	1.1	-	0.06	-0.01	77	133	67	67
474	86.256	0.188	0.078	3.27	99	1.1	-	0.05	-0.01	77	132	67	67
475	86.437	0.181	0.080	3.27	99	1.1	-	0.05	0.00	77	133	67	67
476	86.623	0.186	0.081	3.27	99	1.2	-	0.03	-0.02	76	132	67	67
477	86.802	0.179	0.081	3.28	99	1.1	-	0.03	0.00	76	132	67	67
478	86.987	0.185	0.079	3.26	99	1.1	-	0.02	-0.01	76	132	67	67
479	87.170	0.183	0.080	3.27	99	1.1	99	0.00	-0.02	76	131	67	67

BOX A TEST DATA - ASTM E2780 / ASTM E2515

Client: HHT
Model: Pioneer III
Run #: 1

Job #: 24-253
Tracking #: 180
Technician: SJB
Date: 2/6/2024

	Particulate Sampling Data							Fuel Weight (lb)		Temperature Data (°F)			
Elapsed Time (min)	Gas Meter (ft^3)	Sample Rate (cfm)	Dilution Tunnel dP (in H_2O)	Orifice dH (in H_2O)	Meter Temp (°F)	Meter Vacuum (in Hg)	Pro. Rate (%)	Scale Reading	Weight Change	Dilution Tunnel	Flue	Filter	Ambient
Avg/Tot	87.166	0.182	0.081	3.22	97.5	1.2	100			95.5	271.5	72.1	69.8

BOX B TEST DATA - ASTM E2780 / ASTM E2515

Client: HHT
Model: Pioneer III
Run #: 1

Job #: 24-253
Tracking #: 180
Technician: SJB
Date: 2/6/2024

	Particulate Sampling Data							Flue Gas Data		
Elapsed Time (min)	Gas Meter (ft^3)	Sample Rate (cfm)	Orifice dH (in H_2O)	Meter Temp (°F)	Meter Vacuum (in Hg)	Pro. Rate (%)	Filter (°F)	Flue Draft (in H_2O)	CO_2 (%)	CO (%)
0	0.000		1.67	75	1.8		61	-0.053	2.12	0.140
1	0.167	0.167	3.19	75	1.9	-	75	-0.077	1.52	0.170
2	0.341	0.174	3.19	75	1.9	-	86	-0.094	5.75	0.119
3	0.510	0.169	3.16	75	2.0	-	85	-0.078	8.82	0.665
4	0.686	0.176	3.15	75	1.8	-	86	-0.087	8.85	0.542
5	0.861	0.175	3.15	75	1.8	-	89	-0.094	14.62	0.584
6	1.032	0.171	3.14	75	1.8	-	82	-0.080	10.43	1.174
7	1.206	0.174	3.14	75	2.0	-	81	-0.079	10.16	0.535
8	1.378	0.172	3.12	75	2.2	-	82	-0.077	9.52	0.565
9	1.552	0.174	3.12	76	2.2	-	81	-0.077	9.71	0.488
10	1.725	0.173	3.12	76	2.2	103	81	-0.077	10.06	0.375
11	1.896	0.171	3.12	76	2.2	-	80	-0.074	9.38	0.512
12	2.070	0.174	3.10	76	2.2	-	80	-0.077	9.26	0.596
13	2.247	0.177	3.10	77	2.0	-	80	-0.077	10.05	0.447
14	2.419	0.172	3.10	77	2.3	-	80	-0.076	10.43	0.331
15	2.587	0.168	3.10	77	2.0	-	80	-0.078	10.37	0.312
16	2.761	0.174	3.10	78	2.3	-	81	-0.074	10.11	0.215
17	2.935	0.174	3.10	78	2.2	-	80	-0.073	9.07	0.490
18	3.107	0.172	3.10	78	2.0	-	79	-0.073	8.77	0.768
19	3.282	0.175	3.10	78	2.3	-	80	-0.074	9.75	0.498
20	3.456	0.174	3.11	79	2.3	104	80	-0.074	9.92	0.376
21	3.631	0.175	3.10	79	1.8	-	80	-0.073	9.95	0.351
22	3.803	0.172	3.10	79	2.2	-	80	-0.074	9.83	0.452
23	3.972	0.169	3.10	80	1.9	-	80	-0.074	10.11	0.299
24	4.150	0.178	3.10	80	1.8	-	80	-0.073	9.84	0.423
25	4.325	0.175	3.11	80	2.3	-	80	-0.073	9.69	0.382
26	4.494	0.169	3.11	81	1.7	-	80	-0.071	9.45	0.473
27	4.670	0.176	3.11	81	2.3	-	80	-0.068	9.17	0.513
28	4.842	0.172	3.12	81	1.9	-	80	-0.070	8.66	0.790
29	5.018	0.176	3.12	82	1.9	-	80	-0.070	8.58	0.885
30	5.195	0.177	3.12	82	2.2	102	80	-0.069	8.89	0.725
31	5.368	0.173	3.13	82	2.2	-	80	-0.071	9.10	0.794

BOX B TEST DATA - ASTM E2780 / ASTM E2515

Client: HHT
Model: Pioneer III
Run #: 1

Job #: 24-253
Tracking #: 180
Technician: SJB
Date: 2/6/2024

	Particulate Sampling Data							Flue Gas Data		
Elapsed Time (min)	Gas Meter (ft^3)	Sample Rate (cfm)	Orifice dH (in H_2O)	Meter Temp (°F)	Meter Vacuum (in Hg)	Pro. Rate (%)	Filter (°F)	Flue Draft (in H_2O)	CO_2 (%)	CO (%)
32	5.543	0.175	3.13	83	2.2	-	80	-0.071	9.17	0.742
33	5.719	0.176	3.14	83	2.3	-	80	-0.070	9.56	0.689
34	5.894	0.175	3.14	83	2.2	-	80	-0.067	9.98	0.532
35	6.065	0.171	3.15	84	2.2	-	80	-0.069	9.92	0.683
36	6.243	0.178	3.14	84	2.3	-	80	-0.071	10.23	0.529
37	6.417	0.174	3.14	84	2.3	-	80	-0.069	10.53	0.529
38	6.596	0.179	3.14	85	2.3	-	80	-0.070	10.98	0.575
39	6.771	0.175	3.16	85	2.0	-	80	-0.072	11.07	0.556
40	6.943	0.172	3.16	85	2.3	100	80	-0.070	11.02	0.636
41	7.121	0.178	3.17	86	2.1	-	80	-0.071	11.19	0.522
42	7.302	0.181	3.18	86	2.3	-	80	-0.071	11.00	0.417
43	7.476	0.174	3.18	86	1.7	-	80	-0.073	10.76	0.490
44	7.653	0.177	3.18	87	2.0	-	80	-0.067	10.67	0.398
45	7.828	0.175	3.20	87	2.2	-	80	-0.070	10.33	0.484
46	8.007	0.179	3.20	87	2.0	-	80	-0.067	10.25	0.571
47	8.189	0.182	3.21	87	2.0	-	80	-0.065	9.81	0.753
48	8.366	0.177	3.21	88	2.2	-	80	-0.066	9.84	0.745
49	8.540	0.174	3.21	88	1.9	-	80	-0.068	9.67	0.767
50	8.721	0.181	3.21	88	1.9	102	80	-0.068	9.77	0.700
51	8.897	0.176	3.21	89	1.7	-	80	-0.066	9.77	0.746
52	9.076	0.179	3.21	89	1.7	-	80	-0.068	9.76	0.716
53	9.258	0.182	3.22	89	2.2	-	80	-0.067	9.78	0.773
54	9.432	0.174	3.22	89	2.0	-	80	-0.067	9.91	0.688
55	9.610	0.178	3.22	90	2.2	-	79	-0.067	9.93	0.666
56	9.790	0.180	3.23	90	1.7	-	79	-0.069	10.05	0.641
57	9.974	0.184	3.23	90	1.8	-	79	-0.068	10.13	0.571
58	10.149	0.175	3.23	90	1.7	-	79	-0.066	10.08	0.566
59	10.327	0.178	3.24	91	2.0	-	79	-0.065	10.16	0.621
60	10.506	0.179	3.24	91	2.2	102	79	-0.067	10.36	0.563
61	10.686	0.180	3.24	91	2.1	-	79	-0.067	10.51	0.559
62	10.867	0.181	3.24	91	1.7	-	79	-0.068	10.70	0.510
63	11.046	0.179	3.24	91	1.9	-	79	-0.070	10.73	0.511

BOX B TEST DATA - ASTM E2780 / ASTM E2515

Client: HHT
Model: Pioneer III
Run #: 1

Job #: 24-253
Tracking #: 180
Technician: SJB
Date: 2/6/2024

	Particulate Sampling Data							Flue Gas Data		
Elapsed Time (min)	Gas Meter (ft^3)	Sample Rate (cfm)	Orifice dH (in H_2O)	Meter Temp (°F)	Meter Vacuum (in Hg)	Pro. Rate (%)	Filter (°F)	Flue Draft (in H_2O)	CO_2 (%)	CO (%)
64	11.226	0.180	3.24	92	2.0	-	79	-0.069	10.76	0.574
65	11.402	0.176	3.23	92	2.1	-	79	-0.069	10.90	0.504
66	11.583	0.181	3.25	92	2.2	-	79	-0.069	10.95	0.402
67	11.767	0.184	3.25	92	1.7	-	79	-0.067	11.00	0.396
68	11.946	0.179	3.25	93	1.9	-	79	-0.068	11.01	0.318
69	12.120	0.174	3.24	93	1.7	-	79	-0.071	10.83	0.333
70	12.304	0.184	3.25	93	1.7	103	79	-0.067	10.86	0.367
71	12.482	0.178	3.25	93	2.2	-	79	-0.069	10.76	0.361
72	12.665	0.183	3.25	93	1.7	-	80	-0.069	10.68	0.452
73	12.842	0.177	3.25	93	1.8	-	80	-0.069	10.78	0.421
74	13.025	0.183	3.25	94	2.1	-	80	-0.068	10.76	0.470
75	13.203	0.178	3.25	94	1.6	-	80	-0.068	10.86	0.467
76	13.383	0.180	3.25	94	2.1	-	80	-0.069	11.17	0.385
77	13.565	0.182	3.25	94	2.0	-	80	-0.067	11.23	0.398
78	13.746	0.181	3.25	94	2.2	-	80	-0.074	11.40	0.438
79	13.925	0.179	3.25	95	2.0	-	80	-0.070	11.40	0.437
80	14.101	0.176	3.25	95	1.9	103	80	-0.071	11.55	0.269
81	14.281	0.180	3.25	95	2.1	-	80	-0.070	11.59	0.267
82	14.463	0.182	3.26	95	1.9	-	80	-0.072	11.70	0.239
83	14.644	0.181	3.26	95	2.2	-	80	-0.071	11.62	0.147
84	14.824	0.180	3.25	95	2.1	-	80	-0.071	11.41	0.147
85	15.008	0.184	3.25	95	2.0	-	80	-0.072	11.12	0.138
86	15.184	0.176	3.26	96	2.2	-	80	-0.070	10.83	0.157
87	15.367	0.183	3.25	96	1.7	-	80	-0.070	10.72	0.222
88	15.546	0.179	3.26	96	2.1	-	80	-0.070	10.50	0.251
89	15.728	0.182	3.26	96	2.0	-	80	-0.067	10.41	0.376
90	15.908	0.180	3.26	96	1.8	102	80	-0.068	10.20	0.498
91	16.087	0.179	3.26	96	2.0	-	80	-0.067	10.27	0.454
92	16.268	0.181	3.26	96	1.8	-	80	-0.066	10.35	0.368
93	16.450	0.182	3.27	96	2.1	-	80	-0.070	10.52	0.256
94	16.631	0.181	3.26	97	2.1	-	80	-0.067	10.69	0.216
95	16.816	0.185	3.26	97	2.2	-	80	-0.068	10.85	0.184

BOX B TEST DATA - ASTM E2780 / ASTM E2515

Client: HHT
Model: Pioneer III
Run #: 1

Job #: 24-253
Tracking #: 180
Technician: SJB
Date: 2/6/2024

	Particulate Sampling Data							Flue Gas Data		
Elapsed Time (min)	Gas Meter (ft^3)	Sample Rate (cfm)	Orifice dH (in H_2O)	Meter Temp (°F)	Meter Vacuum (in Hg)	Pro. Rate (%)	Filter (°F)	Flue Draft (in H_2O)	CO_2 (%)	CO (%)
96	16.994	0.178	3.27	97	1.7	-	80	-0.067	10.73	0.212
97	17.173	0.179	3.27	97	1.7	-	80	-0.067	10.72	0.223
98	17.357	0.184	3.27	97	1.8	-	80	-0.068	10.60	0.279
99	17.539	0.182	3.27	97	1.7	-	80	-0.067	10.44	0.315
100	17.717	0.178	3.26	97	2.2	103	80	-0.068	10.31	0.345
101	17.899	0.182	3.27	97	2.2	-	80	-0.066	10.44	0.355
102	18.084	0.185	3.27	97	1.9	-	80	-0.067	10.42	0.396
103	18.263	0.179	3.27	97	2.2	-	80	-0.064	10.44	0.370
104	18.441	0.178	3.26	97	2.2	-	80	-0.064	10.36	0.411
105	18.624	0.183	3.27	98	1.6	-	80	-0.064	10.38	0.417
106	18.806	0.182	3.27	98	2.1	-	80	-0.064	10.37	0.420
107	18.987	0.181	3.27	98	1.8	-	80	-0.065	10.29	0.444
108	19.172	0.185	3.26	98	2.2	-	80	-0.065	10.29	0.416
109	19.349	0.177	3.28	98	1.8	-	80	-0.064	10.33	0.464
110	19.530	0.181	3.27	98	1.6	102	80	-0.064	10.44	0.471
111	19.713	0.183	3.27	98	1.9	-	80	-0.064	10.54	0.446
112	19.898	0.185	3.28	98	1.8	-	80	-0.063	10.58	0.478
113	20.076	0.178	3.27	98	2.2	-	80	-0.065	10.66	0.470
114	20.257	0.181	3.27	98	2.2	-	80	-0.063	10.70	0.440
115	20.441	0.184	3.27	98	1.7	-	80	-0.065	10.58	0.458
116	20.619	0.178	3.27	98	2.0	-	80	-0.064	10.53	0.544
117	20.802	0.183	3.27	99	2.1	-	80	-0.065	10.42	0.558
118	20.988	0.186	3.28	99	2.2	-	80	-0.065	10.36	0.599
119	21.167	0.179	3.28	99	1.8	-	80	-0.063	10.21	0.591
120	21.347	0.180	3.28	99	1.7	102	80	-0.066	10.19	0.597
121	21.529	0.182	3.27	99	1.8	-	80	-0.065	10.29	0.530
122	21.710	0.181	3.28	99	1.9	-	80	-0.067	10.19	0.507
123	21.893	0.183	3.28	99	1.7	-	80	-0.062	10.14	0.468
124	22.076	0.183	3.28	99	2.1	-	80	-0.064	10.03	0.485
125	22.260	0.184	3.27	99	2.2	-	80	-0.064	10.01	0.479
126	22.442	0.182	3.27	99	1.7	-	80	-0.063	10.10	0.393
127	22.620	0.178	3.28	99	1.6	-	81	-0.064	10.01	0.298

BOX B TEST DATA - ASTM E2780 / ASTM E2515

Client: HHT
Model: Pioneer III
Run #: 1

Job #: 24-253
Tracking #: 180
Technician: SJB
Date: 2/6/2024

	Particulate Sampling Data							Flue Gas Data		
Elapsed Time (min)	Gas Meter (ft^3)	Sample Rate (cfm)	Orifice dH (in H_2O)	Meter Temp (°F)	Meter Vacuum (in Hg)	Pro. Rate (%)	Filter (°F)	Flue Draft (in H_2O)	CO_2 (%)	CO (%)
128	22.801	0.181	3.28	99	2.2	-	81	-0.063	9.96	0.246
129	22.987	0.186	3.28	99	2.2	-	81	-0.060	9.70	0.301
130	23.170	0.183	3.28	99	1.7	102	81	-0.065	9.81	0.305
131	23.352	0.182	3.28	99	1.7	-	81	-0.065	9.84	0.366
132	23.531	0.179	3.28	99	2.2	-	81	-0.061	9.96	0.378
133	23.714	0.183	3.28	99	1.7	-	81	-0.064	9.80	0.385
134	23.897	0.183	3.28	100	1.7	-	81	-0.063	9.75	0.400
135	24.080	0.183	3.28	100	2.2	-	81	-0.066	10.14	0.302
136	24.263	0.183	3.28	100	1.8	-	81	-0.064	9.95	0.286
137	24.445	0.182	3.28	100	2.0	-	81	-0.062	9.67	0.319
138	24.628	0.183	3.28	100	1.7	-	81	-0.064	9.53	0.357
139	24.804	0.176	3.28	100	2.1	-	81	-0.061	9.34	0.413
140	24.986	0.182	3.28	100	1.8	101	81	-0.064	9.18	0.423
141	25.170	0.184	3.28	100	2.1	-	81	-0.062	8.96	0.505
142	25.352	0.182	3.28	100	1.6	-	81	-0.059	8.84	0.532
143	25.536	0.184	3.29	100	2.1	-	81	-0.062	8.66	0.610
144	25.718	0.182	3.28	100	2.0	-	81	-0.059	8.32	0.724
145	25.900	0.182	3.28	100	1.9	-	81	-0.059	8.10	0.813
146	26.083	0.183	3.28	100	1.7	-	81	-0.057	8.09	0.811
147	26.264	0.181	3.28	100	1.8	-	81	-0.061	8.08	0.784
148	26.446	0.182	3.28	100	2.2	-	81	-0.057	8.11	0.766
149	26.630	0.184	3.28	100	2.1	-	81	-0.055	7.96	0.772
150	26.814	0.184	3.28	100	1.6	101	81	-0.055	7.88	0.810
151	26.995	0.181	3.28	100	2.0	-	81	-0.050	7.89	0.773
152	27.174	0.179	3.28	100	1.7	-	80	-0.053	7.88	0.734
153	27.357	0.183	3.28	100	1.8	-	80	-0.051	7.70	0.749
154	27.540	0.183	3.29	100	2.1	-	80	-0.056	7.71	0.743
155	27.724	0.184	3.28	100	1.7	-	80	-0.053	7.62	0.735
156	27.906	0.182	3.28	101	2.2	-	80	-0.053	7.61	0.732
157	28.091	0.185	3.29	101	1.8	-	80	-0.052	7.59	0.716
158	28.272	0.181	3.29	101	2.0	-	80	-0.053	7.58	0.714
159	28.451	0.179	3.28	101	1.9	-	80	-0.052	7.59	0.714

BOX B TEST DATA - ASTM E2780 / ASTM E2515

Client: HHT
Model: Pioneer III
Run #: 1

Job #: 24-253
Tracking #: 180
Technician: SJB
Date: 2/6/2024

	Particulate Sampling Data							Flue Gas Data		
Elapsed Time (min)	Gas Meter (ft^3)	Sample Rate (cfm)	Orifice dH (in H_2O)	Meter Temp (°F)	Meter Vacuum (in Hg)	Pro. Rate (%)	Filter (°F)	Flue Draft (in H_2O)	CO_2 (%)	CO (%)
160	28.636	0.185	3.29	101	1.9	100	80	-0.050	7.63	0.702
161	28.819	0.183	3.29	101	1.8	-	80	-0.051	7.59	0.682
162	29.004	0.185	3.29	101	2.2	-	80	-0.052	7.64	0.698
163	29.187	0.183	3.28	101	1.8	-	80	-0.052	7.66	0.683
164	29.364	0.177	3.29	101	2.0	-	80	-0.050	7.68	0.692
165	29.550	0.186	3.29	101	2.0	-	80	-0.049	7.70	0.675
166	29.734	0.184	3.29	101	1.7	-	80	-0.052	7.72	0.666
167	29.914	0.180	3.29	101	1.6	-	80	-0.045	7.71	0.668
168	30.100	0.186	3.29	101	1.6	-	79	-0.042	7.38	0.729
169	30.282	0.182	3.29	101	1.8	-	79	-0.040	7.24	0.850
170	30.463	0.181	3.29	101	1.9	100	79	-0.039	7.10	0.921
171	30.646	0.183	3.28	101	1.6	-	79	-0.038	7.08	0.959
172	30.826	0.180	3.29	101	2.2	-	79	-0.035	6.87	1.057
173	31.009	0.183	3.28	101	2.0	-	78	-0.035	6.66	1.144
174	31.193	0.184	3.28	101	2.2	-	78	-0.036	6.59	1.154
175	31.378	0.185	3.29	101	1.7	-	78	-0.034	6.67	1.192
176	31.560	0.182	3.29	101	2.2	-	78	-0.035	6.55	1.227
177	31.739	0.179	3.29	101	1.7	-	78	-0.036	6.64	1.246
178	31.921	0.182	3.29	101	1.6	-	78	-0.034	6.56	1.245
179	32.108	0.187	3.28	101	2.2	-	78	-0.031	6.59	1.281
180	32.291	0.183	3.29	101	1.7	100	78	-0.031	6.54	1.297
181	32.471	0.180	3.29	101	1.8	-	78	-0.032	6.52	1.450
182	32.654	0.183	3.29	101	2.0	-	78	-0.033	6.43	1.462
183	32.835	0.181	3.30	101	1.6	-	77	-0.029	6.43	1.471
184	33.018	0.183	3.29	101	1.8	-	77	-0.029	6.41	1.461
185	33.205	0.187	3.29	101	1.7	-	77	-0.029	6.48	1.480
186	33.385	0.180	3.30	101	2.2	-	77	-0.029	6.53	1.524
187	33.573	0.188	3.29	101	2.1	-	77	-0.031	6.43	1.496
188	33.755	0.182	3.30	101	1.8	-	77	-0.029	6.47	1.494
189	33.933	0.178	3.30	101	2.2	-	77	-0.029	6.57	1.520
190	34.120	0.187	3.30	101	2.1	99	77	-0.028	6.43	1.492
191	34.302	0.182	3.30	101	2.1	-	77	-0.030	6.43	1.504

BOX B TEST DATA - ASTM E2780 / ASTM E2515

Client: HHT
Model: Pioneer III
Run #: 1

Job #: 24-253
Tracking #: 180
Technician: SJB
Date: 2/6/2024

	Particulate Sampling Data							Flue Gas Data		
Elapsed Time (min)	Gas Meter (ft^3)	Sample Rate (cfm)	Orifice dH (in H_2O)	Meter Temp (°F)	Meter Vacuum (in Hg)	Pro. Rate (%)	Filter (°F)	Flue Draft (in H_2O)	CO_2 (%)	CO (%)
192	34.483	0.181	3.29	101	1.9	-	77	-0.029	6.51	1.538
193	34.667	0.184	3.30	101	2.1	-	77	-0.027	6.49	1.551
194	34.853	0.186	3.29	101	1.9	-	76	-0.028	6.42	1.533
195	35.036	0.183	3.30	101	2.2	-	76	-0.025	6.42	1.562
196	35.217	0.181	3.30	101	2.0	-	76	-0.025	6.45	1.581
197	35.400	0.183	3.29	101	2.2	-	76	-0.028	6.39	1.572
198	35.581	0.181	3.29	101	2.2	-	76	-0.026	6.42	1.432
199	35.764	0.183	3.30	101	1.8	-	76	-0.028	6.53	1.372
200	35.948	0.184	3.30	101	1.7	98	76	-0.027	6.68	1.356
201	36.131	0.183	3.30	101	1.6	-	76	-0.026	6.59	1.372
202	36.316	0.185	3.30	101	2.1	-	76	-0.026	6.59	1.524
203	36.499	0.183	3.30	101	1.7	-	76	-0.024	6.59	1.551
204	36.681	0.182	3.30	101	2.0	-	76	-0.025	6.55	1.545
205	36.862	0.181	3.29	101	2.2	-	76	-0.026	6.59	1.434
206	37.047	0.185	3.30	101	1.6	-	76	-0.024	6.62	1.379
207	37.229	0.182	3.30	101	1.8	-	76	-0.025	6.72	1.374
208	37.412	0.183	3.30	101	1.7	-	76	-0.023	6.66	1.363
209	37.596	0.184	3.30	101	1.7	-	75	-0.025	6.72	1.369
210	37.779	0.183	3.29	101	1.7	98	75	-0.024	6.80	1.386
211	37.961	0.182	3.30	101	1.9	-	75	-0.025	6.72	1.355
212	38.146	0.185	3.30	101	1.6	-	75	-0.024	6.71	1.359
213	38.328	0.182	3.30	101	2.1	-	75	-0.026	6.77	1.381
214	38.513	0.185	3.30	101	2.1	-	75	-0.026	6.75	1.402
215	38.695	0.182	3.30	101	1.6	-	75	-0.024	6.77	1.409
216	38.875	0.180	3.30	101	1.7	-	75	-0.023	6.77	1.409
217	39.058	0.183	3.30	101	1.6	-	75	-0.025	6.86	1.405
218	39.242	0.184	3.30	101	2.2	-	75	-0.025	6.72	1.398
219	39.428	0.186	3.30	101	2.0	-	75	-0.024	6.78	1.408
220	39.612	0.184	3.30	101	1.8	98	74	-0.022	6.76	1.418
221	39.791	0.179	3.30	101	2.0	-	74	-0.021	6.78	1.451
222	39.972	0.181	3.30	101	1.8	-	74	-0.025	6.69	1.441
223	40.159	0.187	3.30	101	1.9	-	74	-0.023	6.74	1.468

BOX B TEST DATA - ASTM E2780 / ASTM E2515

Client: HHT
Model: Pioneer III
Run #: 1

Job #: 24-253
Tracking #: 180
Technician: SJB
Date: 2/6/2024

	Particulate Sampling Data							Flue Gas Data		
Elapsed Time (min)	Gas Meter (ft^3)	Sample Rate (cfm)	Orifice dH (in H_2O)	Meter Temp (°F)	Meter Vacuum (in Hg)	Pro. Rate (%)	Filter (°F)	Flue Draft (in H_2O)	CO_2 (%)	CO (%)
224	40.341	0.182	3.30	101	1.6	-	74	-0.023	6.88	1.478
225	40.523	0.182	3.30	101	1.9	-	74	-0.024	6.67	1.488
226	40.708	0.185	3.30	101	1.6	-	74	-0.025	6.65	1.465
227	40.890	0.182	3.30	101	2.1	-	74	-0.024	6.73	1.497
228	41.075	0.185	3.30	101	2.1	-	74	-0.024	6.80	1.499
229	41.258	0.183	3.30	101	1.9	-	74	-0.023	6.90	1.504
230	41.440	0.182	3.29	101	2.2	98	74	-0.024	6.89	1.496
231	41.625	0.185	3.30	101	2.0	-	74	-0.023	6.87	1.472
232	41.806	0.181	3.30	101	1.7	-	74	-0.021	6.98	1.501
233	41.993	0.187	3.30	101	2.1	-	74	-0.025	6.84	1.483
234	42.172	0.179	3.30	101	1.9	-	74	-0.021	6.89	1.486
235	42.353	0.181	3.31	101	2.1	-	74	-0.024	7.02	1.522
236	42.540	0.187	3.30	101	2.0	-	74	-0.023	6.85	1.480
237	42.723	0.183	3.30	101	1.8	-	74	-0.022	6.92	1.486
238	42.907	0.184	3.30	101	1.8	-	74	-0.022	6.95	1.484
239	43.088	0.181	3.30	101	1.8	-	74	-0.023	6.96	1.477
240	43.270	0.182	3.30	101	1.6	98	74	-0.022	6.94	1.467
241	43.456	0.186	3.30	101	2.2	-	74	-0.025	6.92	1.460
242	43.636	0.180	3.30	101	2.0	-	74	-0.024	7.02	1.484
243	43.821	0.185	3.30	101	1.9	-	74	-0.021	6.91	1.473
244	44.003	0.182	3.30	101	2.1	-	74	-0.023	7.08	1.524
245	44.189	0.186	3.31	101	2.0	-	74	-0.025	6.94	1.515
246	44.369	0.180	3.30	101	2.1	-	74	-0.026	7.03	1.537
247	44.556	0.187	3.31	101	2.2	-	74	-0.022	7.00	1.538
248	44.734	0.178	3.30	101	2.0	-	74	-0.024	6.98	1.503
249	44.920	0.186	3.29	101	1.7	-	74	-0.023	6.96	1.485
250	45.103	0.183	3.30	101	1.9	99	74	-0.021	7.01	1.496
251	45.284	0.181	3.30	101	1.7	-	74	-0.024	6.91	1.434
252	45.472	0.188	3.30	101	2.1	-	74	-0.021	7.00	1.415
253	45.651	0.179	3.30	101	1.7	-	74	-0.023	7.05	1.404
254	45.837	0.186	3.30	101	1.8	-	74	-0.022	7.02	1.441
255	46.016	0.179	3.30	101	1.8	-	74	-0.022	6.87	1.480

BOX B TEST DATA - ASTM E2780 / ASTM E2515

Client: HHT
Model: Pioneer III
Run #: 1

Job #: 24-253
Tracking #: 180
Technician: SJB
Date: 2/6/2024

	Particulate Sampling Data							Flue Gas Data		
Elapsed Time (min)	Gas Meter (ft^3)	Sample Rate (cfm)	Orifice dH (in H_2O)	Meter Temp (°F)	Meter Vacuum (in Hg)	Pro. Rate (%)	Filter (°F)	Flue Draft (in H_2O)	CO_2 (%)	CO (%)
256	46.202	0.186	3.30	101	2.1	-	73	-0.024	6.88	1.500
257	46.383	0.181	3.30	101	1.6	-	73	-0.023	6.93	1.512
258	46.570	0.187	3.30	101	1.6	-	73	-0.021	6.87	1.497
259	46.751	0.181	3.30	101	2.2	-	73	-0.023	6.90	1.506
260	46.937	0.186	3.30	101	2.1	99	73	-0.021	7.03	1.521
261	47.118	0.181	3.29	101	1.9	-	73	-0.022	6.92	1.495
262	47.298	0.180	3.30	101	2.0	-	73	-0.023	6.95	1.504
263	47.484	0.186	3.30	101	2.2	-	73	-0.023	6.97	1.491
264	47.665	0.181	3.30	101	2.1	-	73	-0.024	7.03	1.518
265	47.850	0.185	3.30	101	1.7	-	73	-0.022	7.00	1.469
266	48.032	0.182	3.30	101	1.7	-	73	-0.021	6.94	1.390
267	48.218	0.186	3.30	101	1.8	-	73	-0.024	6.95	1.437
268	48.399	0.181	3.30	101	1.8	-	73	-0.026	6.86	1.451
269	48.583	0.184	3.30	101	2.1	-	73	-0.021	6.80	1.465
270	48.768	0.185	3.30	101	1.7	98	73	-0.024	6.89	1.502
271	48.950	0.182	3.30	101	1.6	-	73	-0.022	6.79	1.502
272	49.132	0.182	3.30	101	2.1	-	73	-0.022	6.88	1.572
273	49.317	0.185	3.30	101	2.0	-	73	-0.023	6.82	1.580
274	49.495	0.178	3.29	101	2.1	-	73	-0.022	6.89	1.572
275	49.679	0.184	3.29	101	2.0	-	73	-0.024	6.84	1.525
276	49.862	0.183	3.30	101	2.1	-	73	-0.023	6.77	1.520
277	50.046	0.184	3.30	101	2.0	-	73	-0.021	6.78	1.510
278	50.233	0.187	3.30	101	2.1	-	73	-0.022	6.79	1.541
279	50.413	0.180	3.30	101	1.8	-	73	-0.024	6.65	1.553
280	50.599	0.186	3.29	101	2.1	99	73	-0.024	6.77	1.591
281	50.777	0.178	3.30	101	1.8	-	73	-0.024	6.70	1.596
282	50.960	0.183	3.29	101	2.2	-	73	-0.026	6.73	1.636
283	51.147	0.187	3.30	101	2.1	-	73	-0.022	6.77	1.556
284	51.328	0.181	3.30	100	1.7	-	73	-0.022	6.75	1.577
285	51.512	0.184	3.30	100	1.9	-	73	-0.025	6.60	1.621
286	51.697	0.185	3.30	100	2.1	-	73	-0.021	6.65	1.670
287	51.875	0.178	3.29	100	1.7	-	73	-0.022	6.55	1.653

BOX B TEST DATA - ASTM E2780 / ASTM E2515

Client: HHT
Model: Pioneer III
Run #: 1

Job #: 24-253
Tracking #: 180
Technician: SJB
Date: 2/6/2024

	Particulate Sampling Data							Flue Gas Data		
Elapsed Time (min)	Gas Meter (ft^3)	Sample Rate (cfm)	Orifice dH (in H_2O)	Meter Temp (°F)	Meter Vacuum (in Hg)	Pro. Rate (%)	Filter (°F)	Flue Draft (in H_2O)	CO_2 (%)	CO (%)
288	52.059	0.184	3.29	100	1.9	-	73	-0.024	6.66	1.694
289	52.245	0.186	3.31	100	1.7	-	72	-0.021	6.72	1.723
290	52.426	0.181	3.30	100	1.9	98	72	-0.022	6.59	1.704
291	52.611	0.185	3.30	100	1.9	-	72	-0.021	6.46	1.691
292	52.793	0.182	3.30	100	1.7	-	72	-0.025	6.58	1.717
293	52.976	0.183	3.30	100	2.1	-	72	-0.021	6.45	1.718
294	53.161	0.185	3.30	100	1.8	-	72	-0.023	6.42	1.750
295	53.340	0.179	3.30	100	1.6	-	72	-0.022	6.48	1.775
296	53.528	0.188	3.31	100	1.8	-	72	-0.021	6.46	1.758
297	53.708	0.180	3.30	100	2.1	-	72	-0.021	6.53	1.792
298	53.895	0.187	3.30	100	1.7	-	72	-0.024	6.51	1.804
299	54.075	0.180	3.31	100	1.7	-	72	-0.022	6.53	1.823
300	54.260	0.185	3.30	100	2.1	99	72	-0.025	6.62	1.847
301	54.439	0.179	3.29	100	2.1	-	72	-0.022	6.64	1.855
302	54.625	0.186	3.30	100	2.2	-	72	-0.022	6.46	1.815
303	54.806	0.181	3.30	100	2.0	-	72	-0.018	6.43	1.792
304	54.991	0.185	3.30	100	2.0	-	72	-0.022	6.44	1.837
305	55.173	0.182	3.30	100	2.1	-	72	-0.022	6.23	1.777
306	55.356	0.183	3.30	100	2.1	-	72	-0.021	6.14	1.700
307	55.541	0.185	3.30	100	2.1	-	72	-0.020	6.12	1.742
308	55.721	0.180	3.30	100	1.7	-	72	-0.023	6.09	1.751
309	55.907	0.186	3.31	100	1.7	-	72	-0.020	6.06	1.750
310	56.091	0.184	3.30	100	1.9	98	72	-0.021	6.13	1.789
311	56.273	0.182	3.30	100	2.1	-	72	-0.020	6.00	1.775
312	56.455	0.182	3.31	100	1.7	-	72	-0.020	6.07	1.787
313	56.636	0.181	3.30	100	2.1	-	72	-0.024	6.11	1.777
314	56.820	0.184	3.30	100	1.7	-	72	-0.023	6.09	1.777
315	57.005	0.185	3.30	100	1.8	-	72	-0.018	6.09	1.764
316	57.187	0.182	3.30	100	1.7	-	72	-0.019	6.04	1.773
317	57.373	0.186	3.30	100	1.8	-	72	-0.020	6.06	1.756
318	57.553	0.180	3.30	100	2.0	-	72	-0.021	6.09	1.790
319	57.737	0.184	3.30	100	1.7	-	72	-0.023	6.09	1.781

BOX B TEST DATA - ASTM E2780 / ASTM E2515

Client: HHT
Model: Pioneer III
Run #: 1

Job #: 24-253
Tracking #: 180
Technician: SJB
Date: 2/6/2024

	Particulate Sampling Data							Flue Gas Data		
Elapsed Time (min)	Gas Meter (ft^3)	Sample Rate (cfm)	Orifice dH (in H_2O)	Meter Temp (°F)	Meter Vacuum (in Hg)	Pro. Rate (%)	Filter (°F)	Flue Draft (in H_2O)	CO_2 (%)	CO (%)
320	57.921	0.184	3.30	100	2.0	98	72	-0.021	6.13	1.772
321	58.101	0.180	3.30	100	1.7	-	72	-0.020	6.16	1.742
322	58.285	0.184	3.31	100	2.1	-	72	-0.021	6.13	1.719
323	58.471	0.186	3.30	100	1.9	-	71	-0.022	6.14	1.714
324	58.653	0.182	3.30	100	2.1	-	72	-0.021	6.25	1.721
325	58.839	0.186	3.30	100	1.7	-	72	-0.023	6.21	1.671
326	59.017	0.178	3.30	100	1.6	-	72	-0.020	6.17	1.674
327	59.203	0.186	3.31	100	1.9	-	71	-0.022	5.96	1.730
328	59.385	0.182	3.30	100	1.9	-	71	-0.022	5.98	1.757
329	59.567	0.182	3.29	100	2.0	-	72	-0.023	6.07	1.744
330	59.751	0.184	3.30	100	1.9	98	71	-0.023	6.09	1.712
331	59.938	0.187	3.30	100	1.7	-	72	-0.022	6.13	1.686
332	60.121	0.183	3.30	100	2.0	-	71	-0.023	6.29	1.688
333	60.301	0.180	3.30	100	1.8	-	71	-0.022	6.26	1.660
334	60.481	0.180	3.30	100	1.7	-	71	-0.022	6.21	1.634
335	60.665	0.184	3.31	100	2.1	-	71	-0.019	6.15	1.625
336	60.852	0.187	3.31	100	2.0	-	71	-0.022	6.23	1.621
337	61.037	0.185	3.30	100	1.9	-	71	-0.021	6.21	1.627
338	61.215	0.178	3.30	100	1.9	-	71	-0.021	6.25	1.641
339	61.398	0.183	3.30	100	2.0	-	71	-0.022	6.26	1.639
340	61.581	0.183	3.30	100	1.7	98	71	-0.025	6.23	1.614
341	61.763	0.182	3.30	100	1.9	-	71	-0.021	6.18	1.614
342	61.947	0.184	3.30	100	1.6	-	71	-0.020	6.21	1.622
343	62.131	0.184	3.30	100	1.9	-	71	-0.020	6.29	1.677
344	62.318	0.187	3.30	100	2.1	-	71	-0.020	6.24	1.680
345	62.500	0.182	3.31	100	2.0	-	71	-0.022	6.14	1.673
346	62.678	0.178	3.30	100	1.8	-	71	-0.021	6.06	1.678
347	62.861	0.183	3.30	100	1.9	-	71	-0.021	6.19	1.703
348	63.045	0.184	3.31	100	2.1	-	71	-0.021	6.11	1.698
349	63.228	0.183	3.30	100	1.7	-	71	-0.021	6.10	1.716
350	63.413	0.185	3.30	100	1.8	98	71	-0.022	6.04	1.728
351	63.595	0.182	3.30	100	2.1	-	71	-0.022	6.02	1.717

BOX B TEST DATA - ASTM E2780 / ASTM E2515

Client: HHT
Model: Pioneer III
Run #: 1

Job #: 24-253
Tracking #: 180
Technician: SJB
Date: 2/6/2024

	Particulate Sampling Data							Flue Gas Data		
Elapsed Time (min)	Gas Meter (ft^3)	Sample Rate (cfm)	Orifice dH (in H_2O)	Meter Temp (°F)	Meter Vacuum (in Hg)	Pro. Rate (%)	Filter (°F)	Flue Draft (in H_2O)	CO_2 (%)	CO (%)
352	63.777	0.182	3.30	100	1.7	-	71	-0.021	6.09	1.728
353	63.960	0.183	3.30	100	1.7	-	71	-0.021	6.14	1.715
354	64.145	0.185	3.30	100	1.6	-	71	-0.020	6.19	1.696
355	64.330	0.185	3.30	100	1.9	-	71	-0.024	6.22	1.665
356	64.513	0.183	3.31	100	1.9	-	71	-0.020	6.11	1.629
357	64.697	0.184	3.30	99	2.1	-	71	-0.019	6.21	1.587
358	64.876	0.179	3.30	100	1.6	-	71	-0.020	6.20	1.546
359	65.057	0.181	3.30	100	1.7	-	71	-0.023	6.19	1.521
360	65.241	0.184	3.30	100	2.0	98	71	-0.021	6.18	1.504
361	65.426	0.185	3.29	99	1.7	-	71	-0.019	6.23	1.536
362	65.610	0.184	3.29	100	1.8	-	71	-0.021	6.17	1.511
363	65.791	0.181	3.29	99	2.2	-	71	-0.022	6.30	1.552
364	65.973	0.182	3.29	99	1.6	-	71	-0.022	6.21	1.509
365	66.158	0.185	3.28	100	1.6	-	71	-0.021	6.17	1.511
366	66.340	0.182	3.29	99	1.6	-	71	-0.023	6.29	1.570
367	66.520	0.180	3.29	99	1.6	-	71	-0.022	6.14	1.543
368	66.706	0.186	3.29	99	1.6	-	71	-0.019	6.10	1.539
369	66.890	0.184	3.30	99	2.0	-	71	-0.020	6.17	1.584
370	67.072	0.182	3.29	99	1.6	99	71	-0.021	6.18	1.613
371	67.252	0.180	3.29	99	2.2	-	71	-0.021	6.20	1.611
372	67.433	0.181	3.29	99	1.7	-	71	-0.019	6.24	1.623
373	67.615	0.182	3.29	99	2.2	-	71	-0.022	6.23	1.627
374	67.800	0.185	3.28	99	1.7	-	71	-0.021	6.27	1.642
375	67.985	0.185	3.29	99	2.2	-	71	-0.020	6.25	1.632
376	68.166	0.181	3.29	99	1.7	-	71	-0.018	6.32	1.667
377	68.351	0.185	3.29	99	1.6	-	71	-0.020	6.18	1.633
378	68.529	0.178	3.28	99	1.9	-	71	-0.021	6.10	1.607
379	68.712	0.183	3.29	99	2.0	-	71	-0.020	6.11	1.626
380	68.897	0.185	3.29	99	1.8	99	71	-0.020	6.16	1.659
381	69.081	0.184	3.29	99	1.8	-	71	-0.021	6.11	1.672
382	69.262	0.181	3.28	99	2.0	-	71	-0.020	6.14	1.682
383	69.444	0.182	3.29	99	2.2	-	71	-0.021	6.18	1.692

BOX B TEST DATA - ASTM E2780 / ASTM E2515

Client: HHT
Model: Pioneer III
Run #: 1

Job #: 24-253
Tracking #: 180
Technician: SJB
Date: 2/6/2024

	Particulate Sampling Data							Flue Gas Data		
Elapsed Time (min)	Gas Meter (ft^3)	Sample Rate (cfm)	Orifice dH (in H_2O)	Meter Temp (°F)	Meter Vacuum (in Hg)	Pro. Rate (%)	Filter (°F)	Flue Draft (in H_2O)	CO_2 (%)	CO (%)
384	69.626	0.182	3.29	99	2.1	-	71	-0.019	6.22	1.652
385	69.808	0.182	3.29	99	1.7	-	71	-0.022	6.30	1.647
386	69.992	0.184	3.28	99	2.0	-	71	-0.020	6.32	1.657
387	70.177	0.185	3.28	99	2.2	-	71	-0.020	6.32	1.666
388	70.360	0.183	3.29	99	1.7	-	71	-0.020	6.13	1.617
389	70.539	0.179	3.28	99	1.7	-	71	-0.020	6.19	1.661
390	70.722	0.183	3.29	99	2.2	99	71	-0.019	6.16	1.677
391	70.903	0.181	3.28	99	2.1	-	71	-0.019	6.14	1.678
392	71.085	0.182	3.29	99	1.6	-	71	-0.019	6.14	1.652
393	71.270	0.185	3.28	99	2.2	-	71	-0.019	6.13	1.661
394	71.455	0.185	3.29	99	2.2	-	71	-0.021	6.10	1.670
395	71.639	0.184	3.29	99	1.6	-	71	-0.018	6.11	1.683
396	71.821	0.182	3.29	99	1.9	-	71	-0.019	6.01	1.668
397	72.002	0.181	3.29	99	1.7	-	71	-0.022	6.08	1.652
398	72.182	0.180	3.29	99	1.6	-	71	-0.020	5.96	1.616
399	72.365	0.183	3.29	99	1.8	-	71	-0.020	6.02	1.643
400	72.547	0.182	3.29	99	1.7	99	70	-0.022	5.96	1.662
401	72.735	0.188	3.30	99	1.7	-	70	-0.018	5.75	1.617
402	72.913	0.178	3.29	99	1.6	-	70	-0.020	5.71	1.676
403	73.095	0.182	3.29	99	2.0	-	71	-0.023	5.62	1.672
404	73.278	0.183	3.29	99	2.0	-	71	-0.017	5.74	1.725
405	73.462	0.184	3.29	99	2.1	-	70	-0.020	5.76	1.726
406	73.647	0.185	3.29	98	2.1	-	70	-0.021	5.73	1.725
407	73.827	0.180	3.29	98	1.8	-	70	-0.019	5.65	1.733
408	74.009	0.182	3.29	98	2.0	-	70	-0.019	5.66	1.731
409	74.195	0.186	3.29	98	1.8	-	70	-0.018	5.61	1.728
410	74.376	0.181	3.30	98	1.8	99	70	-0.018	5.60	1.726
411	74.555	0.179	3.29	98	1.8	-	70	-0.018	5.59	1.727
412	74.739	0.184	3.28	98	2.0	-	71	-0.019	5.71	1.765
413	74.925	0.186	3.29	98	1.7	-	70	-0.019	5.71	1.779
414	75.106	0.181	3.29	98	2.0	-	70	-0.018	5.70	1.781
415	75.291	0.185	3.30	98	2.0	-	70	-0.020	5.60	1.754

BOX B TEST DATA - ASTM E2780 / ASTM E2515

Client: HHT
Model: Pioneer III
Run #: 1

Job #: 24-253
Tracking #: 180
Technician: SJB
Date: 2/6/2024

	Particulate Sampling Data							Flue Gas Data		
Elapsed Time (min)	Gas Meter (ft^3)	Sample Rate (cfm)	Orifice dH (in H_2O)	Meter Temp (°F)	Meter Vacuum (in Hg)	Pro. Rate (%)	Filter (°F)	Flue Draft (in H_2O)	CO_2 (%)	CO (%)
416	75.468	0.177	3.30	98	2.0	-	70	-0.019	5.75	1.763
417	75.651	0.183	3.29	98	2.1	-	70	-0.019	5.75	1.677
418	75.834	0.183	3.30	98	1.8	-	70	-0.019	5.72	1.652
419	76.021	0.187	3.29	98	1.6	-	70	-0.019	5.73	1.654
420	76.201	0.180	3.28	98	1.6	99	70	-0.017	5.81	1.683
421	76.383	0.182	3.29	98	2.0	-	70	-0.019	5.74	1.691
422	76.564	0.181	3.29	98	1.7	-	70	-0.020	5.75	1.693
423	76.750	0.186	3.30	98	1.6	-	70	-0.020	5.82	1.722
424	76.932	0.182	3.29	98	2.1	-	70	-0.021	5.75	1.691
425	77.113	0.181	3.30	98	2.0	-	70	-0.017	5.69	1.695
426	77.297	0.184	3.29	98	1.6	-	70	-0.018	5.79	1.768
427	77.482	0.185	3.29	98	1.6	-	70	-0.016	5.73	1.777
428	77.664	0.182	3.28	98	2.0	-	70	-0.019	5.74	1.770
429	77.842	0.178	3.29	98	1.8	-	70	-0.017	5.69	1.728
430	78.024	0.182	3.29	98	1.9	99	70	-0.019	5.61	1.736
431	78.208	0.184	3.28	98	1.7	-	70	-0.019	5.58	1.787
432	78.391	0.183	3.29	98	2.1	-	70	-0.020	5.48	1.795
433	78.578	0.187	3.29	98	1.8	-	70	-0.020	5.26	1.767
434	78.757	0.179	3.29	98	2.2	-	70	-0.019	4.88	1.662
435	78.937	0.180	3.29	98	1.9	-	70	-0.018	4.81	1.641
436	79.120	0.183	3.29	98	1.6	-	70	-0.017	4.76	1.651
437	79.305	0.185	3.29	98	1.8	-	70	-0.018	4.82	1.701
438	79.486	0.181	3.28	98	1.7	-	70	-0.018	4.84	1.688
439	79.670	0.184	3.29	98	1.9	-	70	-0.019	4.90	1.712
440	79.855	0.185	3.30	98	2.2	99	70	-0.016	4.88	1.683
441	80.032	0.177	3.29	98	1.9	-	70	-0.017	4.78	1.621
442	80.215	0.183	3.29	98	1.9	-	70	-0.017	4.88	1.634
443	80.397	0.182	3.30	98	1.6	-	70	-0.017	4.84	1.609
444	80.581	0.184	3.29	98	2.0	-	70	-0.017	4.73	1.526
445	80.768	0.187	3.30	98	2.0	-	70	-0.017	4.85	1.538
446	80.947	0.179	3.29	98	1.6	-	70	-0.015	4.82	1.527
447	81.128	0.181	3.29	98	2.2	-	70	-0.019	4.79	1.515

BOX B TEST DATA - ASTM E2780 / ASTM E2515

Client: HHT
Model: Pioneer III
Run #: 1

Job #: 24-253
Tracking #: 180
Technician: SJB
Date: 2/6/2024

	Particulate Sampling Data							Flue Gas Data		
Elapsed Time (min)	Gas Meter (ft^3)	Sample Rate (cfm)	Orifice dH (in H_2O)	Meter Temp (°F)	Meter Vacuum (in Hg)	Pro. Rate (%)	Filter (°F)	Flue Draft (in H_2O)	CO_2 (%)	CO (%)
448	81.310	0.182	3.29	98	1.7	-	70	-0.016	4.90	1.520
449	81.492	0.182	3.28	98	1.9	-	70	-0.019	4.85	1.502
450	81.679	0.187	3.29	98	2.2	98	70	-0.018	4.94	1.504
451	81.859	0.180	3.29	98	2.0	-	70	-0.017	4.88	1.453
452	82.041	0.182	3.28	98	2.2	-	70	-0.018	4.97	1.476
453	82.223	0.182	3.28	98	1.7	-	70	-0.018	4.92	1.444
454	82.407	0.184	3.29	98	2.2	-	70	-0.019	5.02	1.460
455	82.586	0.179	3.29	98	1.7	-	70	-0.018	5.01	1.491
456	82.773	0.187	3.29	98	1.9	-	70	-0.015	5.03	1.519
457	82.953	0.180	3.29	98	2.2	-	70	-0.015	5.08	1.550
458	83.139	0.186	3.29	98	1.6	-	70	-0.017	5.07	1.546
459	83.318	0.179	3.30	98	2.2	-	70	-0.018	5.14	1.573
460	83.498	0.180	3.29	98	1.7	98	70	-0.018	5.14	1.565
461	83.681	0.183	3.29	98	1.6	-	70	-0.016	5.06	1.514
462	83.866	0.185	3.29	98	1.8	-	70	-0.019	5.09	1.535
463	84.046	0.180	3.29	98	2.1	-	70	-0.019	5.03	1.505
464	84.234	0.188	3.29	98	1.7	-	70	-0.015	4.97	1.479
465	84.412	0.178	3.29	97	1.7	-	70	-0.018	5.11	1.520
466	84.597	0.185	3.29	97	2.2	-	70	-0.019	5.06	1.491
467	84.775	0.178	3.28	98	1.6	-	70	-0.017	5.07	1.463
468	84.957	0.182	3.28	98	1.7	-	70	-0.018	5.04	1.455
469	85.141	0.184	3.29	97	1.8	-	70	-0.017	4.96	1.546
470	85.325	0.184	3.29	97	1.6	99	70	-0.016	4.87	1.653
471	85.506	0.181	3.29	97	1.9	-	70	-0.016	4.81	1.663
472	85.691	0.185	3.29	97	1.6	-	70	-0.017	4.92	1.706
473	85.870	0.179	3.29	97	2.1	-	70	-0.015	4.81	1.696
474	86.054	0.184	3.29	97	2.1	-	70	-0.016	4.78	1.688
475	86.235	0.181	3.29	97	1.6	-	70	-0.015	4.80	1.698
476	86.421	0.186	3.29	97	1.7	-	70	-0.016	4.82	1.686
477	86.600	0.179	3.29	97	2.1	-	70	-0.018	4.81	1.686
478	86.786	0.186	3.29	97	2.1	-	70	-0.018	4.91	1.671
479	86.963	0.177	3.29	97	1.6	99	70	-0.017	4.84	1.623

BOX B TEST DATA - ASTM E2780 / ASTM E2515

Client: HHT
Model: Pioneer III
Run #: 1

Job #: 24-253
Tracking #: 180
Technician: SJB
Date: 2/6/2024

	Particulate Sampling Data							Flue Gas Data		
Elapsed Time (min)	Gas Meter (ft^3)	Sample Rate (cfm)	Orifice dH (in H_2O)	Meter Temp (°F)	Meter Vacuum (in Hg)	Pro. Rate (%)	Filter (°F)	Flue Draft (in H_2O)	CO_2 (%)	CO (%)
Avg/Tot	86.963	0.182	3.27	96.9	1.9	100	75.0	-0.038	7.44	1.202

BOX C TEST DATA - ASTM E2780 / ASTM E2515

Client: HHT
Model: Pioneer III
Run #: 1

Job #: 24-253
Tracking #: 180
Technician: SJB
Date: 2/6/2024

	Particulate Sampling Data						
Elapsed Time (min)	Gas Meter (ft^3)	Sample Rate (cfm)	Orifice dH (in H_2O)	Meter Temp (°F)	Meter Vacuum (in Hg)	Pro. Rate (%)	Filter (°F)
0	-0.002		0.46	76	1.6		61
1	0.112	0.114	0.87	75	1.5	-	63
2	0.254	0.142	1.01	75	1.6	-	67
3	0.397	0.143	1.01	75	1.6	-	66
4	0.545	0.148	1.01	75	1.9	-	66
5	0.690	0.145	1.00	75	1.9	-	68
6	0.833	0.143	1.01	76	1.7	-	69
7	0.981	0.148	1.02	76	1.9	-	70
8	1.126	0.145	1.03	76	1.9	-	71
9	1.272	0.146	1.03	77	1.9	-	72
10	1.419	0.147	1.03	77	1.9	100	73
11	1.566	0.147	1.03	77	1.7	-	73
12	1.712	0.146	1.03	77	1.8	-	73
13	1.862	0.150	1.03	77	1.8	-	74
14	2.009	0.147	1.03	78	1.8	-	74
15	2.153	0.144	1.02	78	1.9	-	75
16	2.300	0.147	1.03	78	1.9	-	75
17	2.448	0.148	1.03	78	1.9	-	75
18	2.596	0.148	1.04	79	1.9	-	75
19	2.746	0.150	1.04	79	1.7	-	75
20	2.894	0.148	1.04	79	1.9	105	76
21	3.043	0.149	1.05	80	1.9	-	76
22	3.191	0.148	1.05	80	1.9	-	76
23	3.337	0.146	1.05	80	1.8	-	76
24	3.489	0.152	1.05	80	1.9	-	76
25	3.638	0.149	1.06	81	1.7	-	76
26	3.785	0.147	1.06	81	1.7	-	76
27	3.937	0.152	1.06	81	1.8	-	76
28	4.084	0.147	1.06	81	1.9	-	76
29	4.234	0.150	1.07	81	1.9	-	76
30	4.386	0.152	1.07	81	2.0	103	76
31	4.536	0.150	1.06	82	1.7	-	76

BOX C TEST DATA - ASTM E2780 / ASTM E2515

Client: HHT
Model: Pioneer III
Run #: 1

Job #: 24-253
Tracking #: 180
Technician: SJB
Date: 2/6/2024

	Particulate Sampling Data						
Elapsed Time (min)	Gas Meter (ft^3)	Sample Rate (cfm)	Orifice dH (in H_2O)	Meter Temp (°F)	Meter Vacuum (in Hg)	Pro. Rate (%)	Filter (°F)
32	4.686	0.150	1.07	82	1.8	-	76
33	4.837	0.151	1.06	82	2.0	-	76
34	4.988	0.151	1.06	83	1.8	-	76
35	5.137	0.149	1.06	83	1.8	-	76
36	5.291	0.154	1.06	83	1.9	-	76
37	5.439	0.148	1.06	83	2.0	-	76
38	5.593	0.154	1.07	84	1.8	-	76
39	5.744	0.151	1.07	84	1.9	-	76
40	5.893	0.149	1.07	84	1.9	103	76
41	6.044	0.151	1.07	85	2.0	-	76
42	6.198	0.154	1.07	85	2.0	-	76
43	6.347	0.149	1.07	85	1.8	-	76
44	6.499	0.152	1.07	86	2.0	-	76
45	6.648	0.149	1.07	86	1.8	-	76
46	6.800	0.152	1.07	86	1.8	-	76
47	6.955	0.155	1.07	86	1.8	-	76
48	7.108	0.153	1.08	86	1.9	-	76
49	7.258	0.150	1.08	86	1.8	-	76
50	7.414	0.156	1.09	86	1.8	104	76
51	7.565	0.151	1.09	86	2.0	-	76
52	7.717	0.152	1.09	87	1.9	-	76
53	7.873	0.156	1.08	86	1.8	-	76
54	8.025	0.152	1.09	86	1.9	-	76
55	8.179	0.154	1.10	86	2.0	-	76
56	8.333	0.154	1.10	87	1.8	-	76
57	8.488	0.155	1.10	86	2.0	-	76
58	8.640	0.152	1.09	86	1.9	-	76
59	8.795	0.155	1.09	87	1.7	-	76
60	8.950	0.155	1.10	86	1.8	104	75
Avg/Tot	8.952	0.149	1.04	81.4	1.8	103	74.3

WOODSTOVE SURFACE TEMPERATURE DATA

Client: HHT
Model: Pioneer III
Run #: 1

Job #: 24-253
Tracking #: 180
Technician: SJB
Date: 2/6/2024

Stove ΔT: 212

	Temperature Data (°F)						
Elapsed Time (min)	FB Left	FB Right	FB Back	FB Top	FB Bottom	Stove Surface Average	Catalyst Exit
0	431	500	317	476	311	407.0	N/A
1	436	499	335	454	315	407.7	N/A
2	441	499	342	443	318	408.6	N/A
3	444	499	345	445	321	410.9	N/A
4	447	499	345	450	324	413.0	N/A
5	450	498	345	487	326	421.2	N/A
6	453	497	367	500	328	428.9	N/A
7	455	497	354	506	325	427.4	N/A
8	457	495	348	509	325	426.7	N/A
9	458	493	342	513	324	426.1	N/A
10	458	491	334	516	323	424.1	N/A
11	458	488	325	517	322	421.8	N/A
12	456	485	315	518	321	419.0	N/A
13	454	482	305	524	321	417.2	N/A
14	452	478	296	527	320	414.9	N/A
15	450	475	288	530	320	412.3	N/A
16	447	471	280	534	320	410.3	N/A
17	443	465	272	529	320	405.8	N/A
18	440	456	265	523	320	401.1	N/A
19	437	443	260	520	320	395.8	N/A
20	433	428	254	518	320	390.7	N/A
21	430	387	250	518	319	380.8	N/A
22	427	319	246	517	319	365.5	N/A
23	423	294	242	515	319	358.7	N/A
24	420	319	238	510	319	361.2	N/A
25	417	343	235	505	319	363.8	N/A
26	414	277	232	499	319	348.1	N/A
27	411	244	229	493	319	339.1	N/A
28	408	247	227	487	319	337.3	N/A
29	405	244	224	482	318	334.7	N/A
30	402	236	221	477	318	331.0	N/A
31	399	224	219	470	318	326.0	N/A
32	396	211	217	466	318	321.7	N/A
33	393	202	216	462	318	318.2	N/A
34	390	211	214	460	318	318.5	N/A
35	388	251	213	455	317	324.4	N/A
36	385	229	211	451	316	318.2	N/A
37	382	241	210	449	316	319.4	N/A
38	379	240	208	447	315	317.9	N/A
39	376	397	207	447	315	348.4	N/A
40	374	396	206	446	314	347.2	N/A
41	371	395	205	447	314	346.2	N/A
42	368	395	205	447	313	345.4	N/A
43	366	394	204	446	312	344.5	N/A
44	364	394	203	445	312	343.4	N/A
45	362	394	203	445	311	342.9	N/A
46	360	395	203	445	310	342.5	N/A
47	359	395	203	445	310	342.0	N/A

WOODSTOVE SURFACE TEMPERATURE DATA

Client: HHT
Model: Pioneer III
Run #: 1

Job #: 24-253
Tracking #: 180
Technician: SJB
Date: 2/6/2024

Stove ΔT: 212

	Temperature Data (°F)						
Elapsed Time (min)	FB Left	FB Right	FB Back	FB Top	FB Bottom	Stove Surface Average	Catalyst Exit
48	357	307	203	444	309	323.9	N/A
49	356	282	202	443	309	318.4	N/A
50	354	227	202	442	309	306.7	N/A
51	353	207	202	441	308	302.1	N/A
52	353	203	202	439	307	300.8	N/A
53	352	200	202	438	307	299.7	N/A
54	352	198	202	437	306	298.7	N/A
55	351	196	201	436	305	297.8	N/A
56	351	193	201	435	305	296.9	N/A
57	350	192	201	434	304	296.1	N/A
58	350	193	200	434	303	295.9	N/A
59	349	194	200	433	303	295.7	N/A
60	349	200	200	431	302	296.3	N/A
61	348	214	200	431	301	298.7	N/A
62	348	213	200	431	301	298.3	N/A
63	347	207	200	431	300	296.9	N/A
64	347	329	199	431	299	320.9	N/A
65	346	280	200	431	299	310.9	N/A
66	346	383	199	432	298	331.6	N/A
67	345	383	199	433	297	331.4	N/A
68	345	384	200	434	296	331.9	N/A
69	344	386	200	435	296	332.0	N/A
70	344	386	200	435	295	332.0	N/A
71	343	387	201	435	294	332.0	N/A
72	343	387	201	434	293	331.7	N/A
73	343	389	201	433	293	331.6	N/A
74	343	390	202	432	292	331.8	N/A
75	342	392	203	432	291	331.9	N/A
76	342	393	203	432	291	332.2	N/A
77	342	394	204	434	290	332.6	N/A
78	342	396	204	435	289	333.2	N/A
79	342	397	205	437	288	333.9	N/A
80	342	399	206	440	288	334.7	N/A
81	342	400	207	442	287	335.4	N/A
82	342	402	207	445	286	336.3	N/A
83	342	403	208	447	285	336.9	N/A
84	343	405	209	449	285	338.0	N/A
85	343	406	209	452	284	338.8	N/A
86	343	408	210	453	284	339.5	N/A
87	343	409	211	453	283	339.7	N/A
88	344	410	212	450	283	339.7	N/A
89	344	412	212	446	282	339.3	N/A
90	345	413	213	442	282	338.9	N/A
91	345	414	213	439	281	338.6	N/A
92	345	416	214	438	281	338.7	N/A
93	346	417	214	438	280	339.1	N/A
94	346	418	215	439	280	339.8	N/A
95	347	420	216	440	280	340.5	N/A

WOODSTOVE SURFACE TEMPERATURE DATA

Client: HHT
Model: Pioneer III
Run #: 1

Job #: 24-253
Tracking #: 180
Technician: SJB
Date: 2/6/2024

Stove ΔT: 212

	Temperature Data (°F)						
Elapsed Time (min)	FB Left	FB Right	FB Back	FB Top	FB Bottom	Stove Surface Average	Catalyst Exit
96	347	421	216	441	280	340.9	N/A
97	348	422	217	440	279	341.3	N/A
98	349	423	218	439	279	341.5	N/A
99	349	424	218	438	279	341.5	N/A
100	350	425	219	436	278	341.4	N/A
101	351	387	219	433	278	333.5	N/A
102	352	383	220	430	278	332.5	N/A
103	353	333	221	429	278	322.8	N/A
104	353	335	221	428	278	323.2	N/A
105	355	279	222	428	278	312.2	N/A
106	356	286	223	427	278	313.8	N/A
107	356	295	224	426	277	315.8	N/A
108	357	293	225	426	277	315.5	N/A
109	358	310	225	425	277	319.0	N/A
110	359	310	226	424	277	319.2	N/A
111	361	344	227	423	277	326.4	N/A
112	361	437	228	423	277	345.1	N/A
113	363	438	229	422	277	345.7	N/A
114	364	439	229	422	277	346.1	N/A
115	366	440	230	421	276	346.4	N/A
116	367	440	231	419	277	346.9	N/A
117	369	441	232	417	277	347.2	N/A
118	371	442	233	415	277	347.5	N/A
119	372	442	234	413	277	347.5	N/A
120	374	442	235	411	277	347.7	N/A
121	376	442	235	409	277	347.8	N/A
122	377	442	236	408	277	347.9	N/A
123	379	441	237	406	277	347.8	N/A
124	380	440	238	404	277	347.8	N/A
125	383	440	238	402	277	347.8	N/A
126	384	439	239	401	277	348.1	N/A
127	386	439	240	399	278	348.3	N/A
128	388	438	241	399	278	348.7	N/A
129	390	438	242	398	278	349.1	N/A
130	392	438	243	397	278	349.4	N/A
131	394	438	243	396	278	349.9	N/A
132	395	437	244	396	278	350.1	N/A
133	398	437	245	396	278	350.7	N/A
134	400	436	246	395	279	351.1	N/A
135	402	436	247	394	279	351.7	N/A
136	405	435	247	395	279	352.3	N/A
137	408	434	247	394	279	352.4	N/A
138	411	434	247	393	280	353.0	N/A
139	414	433	248	392	280	353.3	N/A
140	417	433	248	390	280	353.5	N/A
141	420	432	249	387	280	353.5	N/A
142	423	431	250	384	280	353.5	N/A
143	426	430	250	381	281	353.5	N/A

WOODSTOVE SURFACE TEMPERATURE DATA

Client: HHT
Model: Pioneer III
Run #: 1

Job #: 24-253
Tracking #: 180
Technician: SJB
Date: 2/6/2024

Stove ΔT: 212

	Temperature Data (°F)						
Elapsed Time (min)	FB Left	FB Right	FB Back	FB Top	FB Bottom	Stove Surface Average	Catalyst Exit
144	429	429	251	378	281	353.6	N/A
145	432	429	251	374	281	353.3	N/A
146	434	428	252	370	282	353.2	N/A
147	436	428	252	367	282	353.0	N/A
148	439	427	253	364	282	352.9	N/A
149	441	427	254	361	283	352.7	N/A
150	443	426	255	357	283	352.6	N/A
151	444	426	255	354	283	352.4	N/A
152	446	425	256	351	283	352.2	N/A
153	447	425	257	348	283	351.9	N/A
154	448	424	257	345	283	351.3	N/A
155	448	424	257	342	284	350.9	N/A
156	449	423	258	339	284	350.6	N/A
157	449	423	257	337	284	350.1	N/A
158	450	423	258	335	284	349.7	N/A
159	450	422	258	332	285	349.3	N/A
160	449	422	258	331	285	348.8	N/A
161	449	421	259	328	285	348.4	N/A
162	449	421	259	327	285	347.9	N/A
163	448	421	259	325	286	347.6	N/A
164	448	421	259	324	286	347.3	N/A
165	447	420	259	322	286	346.8	N/A
166	446	420	259	321	286	346.5	N/A
167	445	420	260	320	287	346.3	N/A
168	445	420	259	317	287	345.6	N/A
169	445	420	259	314	288	345.2	N/A
170	444	420	260	311	289	344.7	N/A
171	443	419	260	308	290	343.9	N/A
172	443	419	260	305	292	343.6	N/A
173	441	419	260	302	293	343.0	N/A
174	440	418	261	299	294	342.3	N/A
175	439	417	261	295	295	341.5	N/A
176	437	416	261	293	297	340.6	N/A
177	436	415	260	290	298	339.6	N/A
178	434	413	259	287	298	338.2	N/A
179	431	412	258	284	299	336.8	N/A
180	429	410	256	281	300	335.3	N/A
181	427	408	254	279	301	333.7	N/A
182	425	406	252	276	301	332.0	N/A
183	422	404	250	273	301	330.2	N/A
184	419	402	248	271	302	328.2	N/A
185	417	399	245	268	302	326.3	N/A
186	414	397	243	266	303	324.6	N/A
187	411	394	241	264	303	322.5	N/A
188	408	392	238	262	303	320.4	N/A
189	405	389	236	260	303	318.7	N/A
190	402	387	234	258	303	316.6	N/A
191	399	384	232	256	303	314.9	N/A

WOODSTOVE SURFACE TEMPERATURE DATA

Client: HHT
Model: Pioneer III
Run #: 1

Job #: 24-253
Tracking #: 180
Technician: SJB
Date: 2/6/2024

Stove ΔT: 212

	Temperature Data (°F)						
Elapsed Time (min)	FB Left	FB Right	FB Back	FB Top	FB Bottom	Stove Surface Average	Catalyst Exit
192	396	382	230	254	303	313.0	N/A
193	393	380	228	252	303	311.1	N/A
194	390	377	226	250	303	309.4	N/A
195	387	375	224	248	303	307.3	N/A
196	384	372	222	247	303	305.5	N/A
197	381	370	220	245	303	303.7	N/A
198	378	367	218	244	302	302.1	N/A
199	376	365	217	242	302	300.4	N/A
200	373	363	215	241	302	298.8	N/A
201	370	360	214	240	302	296.9	N/A
202	367	358	212	238	301	295.1	N/A
203	364	353	210	237	301	293.0	N/A
204	361	326	209	236	301	286.6	N/A
205	359	310	208	235	300	282.3	N/A
206	356	305	206	234	300	280.3	N/A
207	354	303	205	233	299	278.7	N/A
208	351	301	204	232	299	277.5	N/A
209	348	283	203	231	298	272.8	N/A
210	346	284	202	230	298	272.0	N/A
211	344	274	201	230	297	269.0	N/A
212	341	258	200	229	297	264.8	N/A
213	340	252	199	228	296	263.0	N/A
214	337	249	198	228	295	261.4	N/A
215	335	242	197	227	295	259.2	N/A
216	333	239	196	227	294	257.8	N/A
217	331	236	195	226	294	256.4	N/A
218	329	234	194	225	293	255.0	N/A
219	328	232	193	225	292	253.9	N/A
220	326	240	192	224	292	254.7	N/A
221	324	237	192	223	291	253.3	N/A
222	323	261	191	222	291	257.4	N/A
223	321	267	190	222	290	257.8	N/A
224	319	269	189	221	290	257.5	N/A
225	318	257	188	220	289	254.3	N/A
226	316	264	188	219	289	254.9	N/A
227	315	251	187	218	288	251.7	N/A
228	313	242	186	218	287	249.1	N/A
229	312	233	186	217	287	246.7	N/A
230	310	233	185	216	286	246.0	N/A
231	309	227	185	215	285	244.3	N/A
232	308	228	185	215	285	243.8	N/A
233	306	229	184	214	284	243.5	N/A
234	305	226	184	213	284	242.2	N/A
235	304	237	183	213	283	243.9	N/A
236	302	242	183	212	283	244.4	N/A
237	301	252	182	212	282	245.9	N/A
238	300	255	183	212	282	246.2	N/A
239	299	259	182	211	281	246.5	N/A

WOODSTOVE SURFACE TEMPERATURE DATA

Client: HHT
Model: Pioneer III
Run #: 1

Job #: 24-253
Tracking #: 180
Technician: SJB
Date: 2/6/2024

Stove ΔT: 212

	Temperature Data (°F)						
Elapsed Time (min)	FB Left	FB Right	FB Back	FB Top	FB Bottom	Stove Surface Average	Catalyst Exit
240	299	272	182	211	281	248.7	N/A
241	297	265	181	210	280	246.9	N/A
242	296	267	181	210	280	246.7	N/A
243	295	260	180	209	279	244.8	N/A
244	294	250	180	209	279	242.4	N/A
245	294	251	179	209	278	242.2	N/A
246	293	242	179	209	278	240.0	N/A
247	292	233	178	208	277	237.8	N/A
248	292	232	178	208	277	237.4	N/A
249	290	232	178	208	276	236.9	N/A
250	290	229	177	208	276	235.9	N/A
251	289	230	177	207	276	235.6	N/A
252	288	241	176	207	275	237.5	N/A
253	287	262	176	206	275	241.4	N/A
254	287	264	176	206	274	241.6	N/A
255	286	266	176	206	274	241.5	N/A
256	285	269	175	206	274	241.8	N/A
257	284	269	174	206	273	241.4	N/A
258	284	234	175	205	273	234.0	N/A
259	283	231	174	205	273	233.2	N/A
260	282	236	174	205	272	233.8	N/A
261	282	248	174	205	272	236.1	N/A
262	281	258	173	205	272	237.7	N/A
263	281	268	173	204	271	239.4	N/A
264	280	260	173	204	271	237.5	N/A
265	280	258	173	204	271	236.9	N/A
266	279	256	173	204	270	236.3	N/A
267	279	255	173	204	270	235.9	N/A
268	278	253	172	203	270	235.3	N/A
269	278	256	172	203	269	235.5	N/A
270	277	260	172	203	269	236.1	N/A
271	277	258	172	203	269	235.5	N/A
272	276	260	172	202	268	235.6	N/A
273	275	255	171	202	268	234.3	N/A
274	275	256	171	202	268	234.3	N/A
275	274	232	171	202	267	229.3	N/A
276	274	231	171	202	267	229.0	N/A
277	273	229	170	202	267	228.2	N/A
278	273	227	170	201	267	227.6	N/A
279	273	227	170	201	267	227.4	N/A
280	272	227	170	201	266	227.2	N/A
281	272	227	170	200	266	227.1	N/A
282	271	228	170	200	266	227.1	N/A
283	271	230	170	200	266	227.5	N/A
284	271	230	170	200	265	227.2	N/A
285	271	232	170	200	265	227.4	N/A
286	270	233	169	200	265	227.4	N/A
287	270	229	169	200	265	226.5	N/A

WOODSTOVE SURFACE TEMPERATURE DATA

Client: HHT
Model: Pioneer III
Run #: 1

Job #: 24-253
Tracking #: 180
Technician: SJB
Date: 2/6/2024

Stove ΔT: 212

	Temperature Data (°F)						
Elapsed Time (min)	FB Left	FB Right	FB Back	FB Top	FB Bottom	Stove Surface Average	Catalyst Exit
288	269	228	169	200	265	226.1	N/A
289	269	229	168	199	265	226.2	N/A
290	269	228	168	199	265	225.6	N/A
291	269	228	168	199	264	225.6	N/A
292	268	226	168	199	264	225.0	N/A
293	268	232	167	199	264	225.9	N/A
294	268	232	167	198	264	225.7	N/A
295	267	231	167	198	264	225.5	N/A
296	267	234	167	198	264	225.7	N/A
297	267	236	167	197	264	226.1	N/A
298	267	237	166	197	263	226.1	N/A
299	266	234	166	197	264	225.3	N/A
300	266	234	166	197	263	225.0	N/A
301	266	234	166	196	263	225.0	N/A
302	265	236	166	196	263	225.3	N/A
303	265	235	166	196	263	224.9	N/A
304	265	235	166	196	263	224.7	N/A
305	265	231	166	195	263	223.8	N/A
306	264	234	165	195	263	224.2	N/A
307	264	233	165	194	263	223.8	N/A
308	264	218	165	194	263	220.7	N/A
309	264	219	165	194	262	220.7	N/A
310	263	220	165	194	262	220.7	N/A
311	263	222	165	193	262	221.0	N/A
312	263	222	164	193	262	220.9	N/A
313	263	225	164	193	262	221.2	N/A
314	262	224	164	192	262	220.8	N/A
315	262	221	163	192	262	220.1	N/A
316	262	218	163	192	262	219.4	N/A
317	261	217	163	192	262	218.9	N/A
318	261	218	163	191	262	219.0	N/A
319	261	209	163	190	262	217.0	N/A
320	261	213	163	190	262	217.6	N/A
321	261	217	163	189	261	218.2	N/A
322	261	220	162	189	261	218.6	N/A
323	260	222	162	188	261	218.6	N/A
324	260	225	162	188	261	219.0	N/A
325	260	222	161	187	261	218.1	N/A
326	259	221	161	187	261	218.0	N/A
327	259	224	160	187	261	218.4	N/A
328	259	226	160	187	261	218.5	N/A
329	259	217	160	187	261	216.6	N/A
330	259	214	160	186	261	215.9	N/A
331	259	219	159	186	261	216.7	N/A
332	258	225	159	186	260	217.6	N/A
333	258	224	158	185	260	217.2	N/A
334	258	223	158	185	260	216.9	N/A
335	258	217	158	185	260	215.6	N/A

WOODSTOVE SURFACE TEMPERATURE DATA

Client: HHT
Model: Pioneer III
Run #: 1

Job #: 24-253
Tracking #: 180
Technician: SJB
Date: 2/6/2024

Stove ΔT: 212

	Temperature Data (°F)						
Elapsed Time (min)	FB Left	FB Right	FB Back	FB Top	FB Bottom	Stove Surface Average	Catalyst Exit
336	258	218	158	185	260	215.7	N/A
337	257	215	157	185	260	214.9	N/A
338	257	214	157	185	260	214.7	N/A
339	258	213	157	185	260	214.5	N/A
340	257	214	157	185	260	214.5	N/A
341	257	214	157	184	260	214.4	N/A
342	257	217	157	184	260	214.9	N/A
343	257	216	156	184	260	214.6	N/A
344	258	214	156	184	260	214.3	N/A
345	257	214	156	184	260	214.0	N/A
346	257	212	155	184	260	213.5	N/A
347	257	212	155	184	259	213.4	N/A
348	257	212	155	184	259	213.3	N/A
349	257	212	154	183	259	213.3	N/A
350	257	191	155	183	260	209.0	N/A
351	256	188	154	183	260	208.3	N/A
352	257	186	154	184	259	207.9	N/A
353	256	184	154	184	259	207.5	N/A
354	256	183	154	184	259	207.3	N/A
355	257	185	153	184	259	207.5	N/A
356	257	184	153	184	259	207.5	N/A
357	256	188	153	184	259	207.8	N/A
358	256	189	153	184	259	208.0	N/A
359	256	187	152	184	259	207.7	N/A
360	256	189	152	183	259	207.9	N/A
361	257	185	153	184	259	207.4	N/A
362	257	184	153	184	259	207.4	N/A
363	258	183	153	184	259	207.6	N/A
364	257	183	154	184	259	207.5	N/A
365	258	183	154	184	259	207.7	N/A
366	258	183	154	184	259	207.5	N/A
367	258	183	154	184	259	207.8	N/A
368	258	183	154	185	259	207.7	N/A
369	258	183	154	185	259	207.7	N/A
370	258	182	154	185	259	207.5	N/A
371	259	181	154	185	259	207.5	N/A
372	259	181	154	185	259	207.5	N/A
373	259	182	154	185	259	207.8	N/A
374	260	181	154	185	259	207.8	N/A
375	259	181	154	185	259	207.6	N/A
376	260	180	154	185	259	207.6	N/A
377	259	180	155	185	259	207.5	N/A
378	261	179	155	185	259	207.7	N/A
379	261	179	155	185	260	207.9	N/A
380	261	179	155	185	260	207.9	N/A
381	261	179	155	185	260	207.8	N/A
382	261	178	155	185	260	207.9	N/A
383	261	178	154	185	260	207.8	N/A

WOODSTOVE SURFACE TEMPERATURE DATA

Client: HHT
Model: Pioneer III
Run #: 1

Job #: 24-253
Tracking #: 180
Technician: SJB
Date: 2/6/2024

Stove ΔT: 212

	Temperature Data (°F)						
Elapsed Time (min)	FB Left	FB Right	FB Back	FB Top	FB Bottom	Stove Surface Average	Catalyst Exit
384	261	179	155	185	260	208.1	N/A
385	261	178	155	185	260	207.9	N/A
386	261	177	155	185	261	207.8	N/A
387	262	177	155	185	261	207.9	N/A
388	262	176	155	186	261	208.0	N/A
389	262	176	155	186	261	207.9	N/A
390	262	176	156	186	261	208.1	N/A
391	263	176	156	185	262	208.2	N/A
392	262	178	156	185	262	208.4	N/A
393	263	177	156	185	262	208.4	N/A
394	262	179	156	185	262	208.7	N/A
395	263	178	156	185	262	208.9	N/A
396	263	178	157	185	262	208.9	N/A
397	263	178	157	185	262	208.9	N/A
398	263	178	157	184	262	209.0	N/A
399	264	178	157	184	262	209.0	N/A
400	264	178	157	184	263	209.1	N/A
401	264	177	157	184	263	209.0	N/A
402	264	177	158	184	263	209.0	N/A
403	264	177	158	183	263	209.0	N/A
404	264	178	158	183	263	209.1	N/A
405	264	178	158	183	263	209.0	N/A
406	264	177	158	183	263	209.0	N/A
407	264	177	158	182	263	208.9	N/A
408	263	176	158	182	263	208.6	N/A
409	264	176	158	182	263	208.8	N/A
410	265	177	159	182	263	209.0	N/A
411	264	177	159	181	264	209.0	N/A
412	264	178	159	181	264	209.2	N/A
413	263	177	159	181	264	208.7	N/A
414	264	176	159	181	264	208.7	N/A
415	264	175	160	180	264	208.5	N/A
416	263	174	159	180	264	208.2	N/A
417	264	174	159	180	264	208.1	N/A
418	264	161	159	180	264	205.5	N/A
419	263	160	159	180	264	205.3	N/A
420	263	160	159	180	265	205.3	N/A
421	262	161	159	179	264	205.2	N/A
422	263	160	159	179	265	205.1	N/A
423	263	160	159	179	265	205.0	N/A
424	263	160	159	179	265	204.9	N/A
425	263	160	159	178	265	204.8	N/A
426	263	160	159	178	265	204.9	N/A
427	263	160	159	178	265	204.7	N/A
428	263	159	159	178	265	204.5	N/A
429	263	159	159	178	265	204.6	N/A
430	263	160	159	178	265	204.8	N/A
431	263	160	159	177	265	204.7	N/A

WOODSTOVE SURFACE TEMPERATURE DATA

Client: HHT
Model: Pioneer III
Run #: 1

Job #: 24-253
Tracking #: 180
Technician: SJB
Date: 2/6/2024

Stove ΔT: 212

	Temperature Data (°F)						
Elapsed Time (min)	FB Left	FB Right	FB Back	FB Top	FB Bottom	Stove Surface Average	Catalyst Exit
432	263	160	159	177	265	204.7	N/A
433	264	159	160	177	265	204.6	N/A
434	264	159	160	176	265	204.7	N/A
435	264	161	160	176	265	205.2	N/A
436	264	162	160	175	265	205.3	N/A
437	264	163	161	175	265	205.3	N/A
438	263	164	160	174	265	205.2	N/A
439	264	163	161	174	265	205.3	N/A
440	264	161	161	173	265	204.8	N/A
441	264	161	160	173	264	204.6	N/A
442	264	160	161	173	265	204.3	N/A
443	264	160	160	172	265	204.2	N/A
444	264	160	160	172	265	204.0	N/A
445	264	160	160	171	264	203.8	N/A
446	263	160	160	171	264	203.7	N/A
447	264	159	159	171	264	203.3	N/A
448	263	160	159	170	264	203.1	N/A
449	263	159	159	170	264	202.9	N/A
450	263	159	158	169	264	202.7	N/A
451	263	160	158	169	264	202.7	N/A
452	263	159	158	169	263	202.3	N/A
453	263	157	157	169	263	201.7	N/A
454	263	157	157	169	263	201.5	N/A
455	263	156	156	168	263	201.2	N/A
456	262	156	156	168	263	201.0	N/A
457	262	155	155	168	263	200.7	N/A
458	262	154	155	168	262	200.3	N/A
459	262	154	155	168	262	200.2	N/A
460	262	153	154	168	262	200.0	N/A
461	262	153	154	168	262	199.8	N/A
462	262	153	154	168	262	199.5	N/A
463	262	153	153	168	262	199.4	N/A
464	261	151	153	168	262	198.9	N/A
465	261	150	152	167	261	198.4	N/A
466	261	149	152	167	261	198.2	N/A
467	262	149	152	167	261	198.1	N/A
468	262	149	152	167	261	197.9	N/A
469	261	149	151	167	261	197.8	N/A
470	261	148	151	167	260	197.5	N/A
471	261	148	151	167	260	197.3	N/A
472	261	148	150	166	260	197.0	N/A
473	261	148	150	166	260	196.9	N/A
474	261	145	150	166	260	196.3	N/A
475	261	145	150	166	259	196.0	N/A
476	261	144	149	165	259	195.8	N/A
477	261	144	149	165	259	195.5	N/A
478	261	144	149	165	259	195.4	N/A
479	261	144	148	165	259	195.3	N/A

WOODSTOVE SURFACE TEMPERATURE DATA

Client: HHT
Model: Pioneer III
Run #: 1

Job #: 24-253
Tracking #: 180
Technician: SJB
Date: 2/6/2024

Stove ΔT: 212

	Temperature Data (°F)						
Elapsed Time (min)	FB Left	FB Right	FB Back	FB Top	FB Bottom	Stove Surface Average	Catalyst Exit
Average	324.2	281.7	195.8	280.8	279.3	272.4	N/A

LAB SAMPLE DATA - ASTM E2515

Client: HHT
Model: Pioneer III
Run #: 1

Job #: 24-253
Tracking #: 180
Technician: SJB
Date: 2/6/2024

		Sample ID	Tare, mg	Final, mg	Catch, mg
Filters	**A**	G867	231.4	237.6	6.2
	B	G868	231.0	237.1	6.1
	C - 1st Hour	G869	229.2	235.7	6.5
	Amb	G870	230.2	230.2	0.0
Probes	**A**	11A	116865.5	116865.9	0.4
	B	11B	117339.0	117339.6	0.6
	C - 1st Hour	11C	116185.0	116185.4	0.4
O-rings	**A**	11A	3423.8	3424.4	0.6
	B	11B	4233.6	4235.2	1.6
	C - 1st Hour	11C	3588.6	3589.2	0.6

Placed in Dessicator on:	2/7/2024 -9:00

Balance Audit (mg):		100.0		100.0		100.0			
		Weight (mg)	Date/Time	Weight (mg)	Date/Time	Weight (mg)	Date/Time	Weight (mg)	Date/Time
Filters	**A**	237.8	2/9 - 10:00	237.6	2/16 - 11:00				
	B	237.5	2/9 - 10:00	237.1	2/16 - 11:00	237.1	2/19-8:30		
	C - 1st Hour	235.6	2/9 - 10:00	235.7	2/16 - 11:00				
	Amb	230.3	2/9 - 10:00	230.2	2/16 - 11:00				
Probes	**A**	116865.9	2/9 - 10:00	116865.9	2/16 - 11:00				
	B	117339.7	2/9 - 10:00	117339.6	2/16 - 11:00				
	C - 1st Hour	116185.4	2/9 - 10:00	116185.4	2/16 - 11:00				
O-Rings	**A**	3424.6	2/9 - 10:00	3424.4	2/16 - 11:00				
	B	4235.4	2/9 - 10:00	4235.2	2/16 - 11:00				
	C - 1st Hour	3589.3	2/9 - 10:00	3589.2	2/16 - 11:00				

Train A Aggregate, mg:	**7.2**
Train B Aggregate, mg:	**8.3**
Train C Aggregate, mg:	**7.5**
Ambient, mg:	**0.0**

ASTM E2780 Wood Heater Run Sheets

Client: HHT Job Number: 24-253 Tracking #: 180
Model: Pioneer III Run Number: 1 Test Date: 2/6/2024

Wood Heater Run Notes

Test Control Settings

Primary Air Setting(s): N/A – Thermostat controlled
Targeted Burn Category: Cat 1

Preburn Notes

Time	Notes
9:52	Started kindling for with ~3.5 lbs of fuel, thermostat set to heat demand
10:15	Loaded 1st pre burn load ~16lbs
11:40	@2.0 lbs scooped and zeroed appliance, loaded 2nd preburn load, thermostat still set to heat demand
11:51	@20.7 lbs, turned thermostat heat demand off, began logging 1-hr preburn test
12:51	Leveled coal bed and zeroed scale in preparation of test loading.

Test Notes

Test Burn Start Time: 12:53 Test Fuel Loaded by: 40 seconds
Door Closed: 300 seconds Air Control Set at: 0 seconds
Other Loading Notes: N/A

Time	Notes
12:53	Loaded fuel, left door cracked open 1", thermostat no calling for heat for duration of test
12:55	Closed door handle half closed per manufacturers instructions
12:58	Closed door, pushed SBT button per instructions
8:52	End of test

Test Burn End Time: 8:52

Flue Gas Concentration Measurement

Calibration Gas Values: Span Gas CO_2 (%): 16.98 CO (%): 4.300
Mid Gas CO_2 (%): 10.09 CO (%): 2.53

Calibration Results:

	Pre Test			Post Test		
	Zero	Mid	Span	Zero	Mid	Span
Time	11:00	10:55	10:58	2/7 – 11:00	2/7 – 11:06	2/7 – 11:04
CO_2	0.00	9.93	16.99	0.03	9.92	16.91
CO	0.000	2.486	4.282	-0.002	2.491	4.274

Flue Gas Probe Leak Check: Initial: No Leakage Final: No Leakage

Technician Signature: Date: 2/7/2024

ASTM E2780 Wood Heater Run Sheets

Client: HHT Job Number: 24-253 Tracking #: 180
Model: Pioneer III Run Number: 1 Test Date: 2/6/2024

Test Fuel Side View

Test Fuel Iso View

Test Fuel Loaded in Stove

N/A – Automated stove controlled by thermostat

Air Setting

Technician Signature: Date: 2/7/2024

ASTM E2780 Wood Heater Run Sheets

Client: HHT Job Number: 24-253 Tracking #: 180
Model: Pioneer III Run Number: 1 Test Date: 2/6/2024

REVISION HISTORY

Version Number	Issue Date	Summary of Changes
Version 1.0	20-Sep-22	Initial release into the BMS

DOCUMENT APPROVAL

Version Number	Approval Date	Approved by
Version 1.0	20-Sep-22	John Steinert

Technician Signature: Date: 2/7/2024

Run 1 Alternative Dt Evaluation

Pioneer-III		
Stove Metal Mass	486.6	lb
Stove Refractory Mass	55.6	lb
dT	211.7	F
Fuel dry mass	25.48	dry lb
QFC	217140.6	
0.085(QFC)	**18456.9**	
DQH	**12655.4**	VALID

WOOD STOVE TEST DATA PACKET
ASTM E2780/E2515

Run 2 Data Summary

Client:	HHT
Model:	Pioneer III
Job #:	24-253
Tracking #:	180
Test Date:	2/7/2024

2/19/2024

Techician Signature Date

TEST RESULTS - ASTM E2780 / ASTM E2515

Client: HHT
Model: Pioneer III
Run #: 2

Job #: 24-253
Tracking #: 180
Technician: SJB
Date: 2/7/2024

Burn Rate (kg/hr):	1.41

	Ambient Sample	Sample Train A	Sample Train B	1st Hour Filter
Total Sample Volume (ft^3)	40.653	89.681	89.076	8.808
Average Gas Velocity in Dilution Tunnel (ft/sec)	18.5			
Average Gas Flow Rate in Dilution Tunnel (dscf/hr)	12092.6			
Average Gas Meter Temperature (°F)	67.5	98.1	95.2	79.2
Total Sample Volume (dscf)	40.852	85.107	85.050	8.603
Average Tunnel Temperature (°F)	95.8			
Total Time of Test (min)	492			
Total Particulate Catch (mg)	0.0	10.6	10.9	10.1
Particulate Concentration, dry-standard (g/dscf)	0.0000000	0.0001245	0.0001282	0.0011740
Total PM Emissions (g)	0.00	12.35	12.71	14.20
Particulate Emission Rate (g/hr)	0.00	1.51	1.55	14.20
Emissions Factor (g/kg)	-	1.07	1.10	-
Difference from Average Total Particulate Emissions (g)	-	0.18	0.18	-
Difference from Average Total Particulate Emissions (%)	-	1.4%	1.4%	
Difference from Average Emissions Factor (g/kg)	-	0.02	0.02	-

Final Average Results	
Total Particulate Emissions (g)	12.53
Particulate Emission Rate (g/hr)	1.53
Emissions Factor (g/kg)	1.09
HHV Efficiency (%)	67.4%
LHV Efficiency (%)	72.9%
CO Emissions (g/min)	2.18

Quality Checks	Requirement	Observed	Result
Dual Train Precision	Each train within 7.5% of average emissions (in grams), or emission factors within 0.5 g/kg	See Above	OK
Filter Temps	<90 °F	88.6	OK
Face Velocity	< 30 ft/min	10.2	OK
Leakage Rate	Less than 4% of average sample rate	0.001 cfm	OK
Ambient Temp	55-90 °F	Min:60.6/Max:71.6	OK
Negative Probe Weight Evaluation	<5% of Total Catch	Probe Catch Not Negative	OK
Pro-Rate Variation	90% of readings between 90-110%; none greater than 120% or less than 80%	See Data Tabs	OK
Stove Surface ΔT	<126°F	168.8	Not Acceptable

B415.1 Efficiency Results

Manufacturer:	HHT
Model:	Pioneer III
Date:	02/07/24
Run:	2
Control #:	24-253
Test Duration:	492
Output Category:	3

Test Results in Accordance with CSA B415.1-09

	HHV Basis	LHV Basis
Overall Efficiency	67.4%	72.9%
Combustion Efficiency	93.4%	93.4%
Heat Transfer Efficiency	72.2%	78.0%

Output Rate (kJ/h)	18,622	17,665	**(Btu/h)**
Burn Rate (kg/h)	1.39	3.07	**(lb/h)**
Input (kJ/h)	27,624	26,204	**(Btu/h)**

Test Load Weight (dry kg)	11.43	25.20	**dry lb**
MC wet (%)	18.81		
MC dry (%)	23.17		
Particulate (g)	12.53		
CO (g)	1,072		
Test Duration (h)	8.20		

Emissions	Particulate	CO
g/MJ Output	0.08	7.02
g/kg Dry Fuel	1.10	93.78
g/h	1.53	130.78
g/min	0.03	2.18
lb/MM Btu Output	0.19	16.32

Air/Fuel Ratio (A/F)	13.90

VERSION: **2.4** **4/15/2010**

WOODSTOVE FUEL DATA - ASTM E2780

Client: HHT
Model: Pioneer III
Run #: 2

Job #: 24-253
Tracking #: 180
Technician: SJB
Date: 2/7/2024

Preburn Fuel Information

Size	Length (in)	Moisture Content (% DB)	Size	Length (in)	Moisture Content (% DB)
2x4	21.00	23.1	2x4	12.00	20.8
2x4	21.00	21.1	2x4	12.00	19.1
2x4	21.00	23.0	2x4	12.00	19.5
2x4	21.00	23.0	2x4	12.00	19.2
2x4	12.00	19.3	2x4	12.00	23.0
2x4	12.00	19.0	2x4	12.00	20.4
2x4	12.00	22.0			
2x4	12.00	19.2			

Total Fuel Weight (lbs): 26.54
Average Moisture (%DB): 20.8

Firebox Volume (ft^3): 4.06
Total 2x4 Crib Weight, with spacers (lbs): 0.00
Total 4x4 Crib Weight, with spacers (lbs): 31.04
Total Wet Fuel Weight, with spacers (lbs): 31.04

Coal Bed Range (20-25%):
Min (lbs): 6.21
Max (lbs): 7.76

Test Fuel Information

Size	Length (in)	Weight (lbs)	Moisture Content (%DB)			Dry Weight (lbs)
4x4	22.00	5.09	19.4	24.5	23.8	4.15
4x4	22.00	6.75	23.6	22.7	24.2	5.47
4x4	22.00	5.18	22.4	22.5	24.5	4.21
4x4	22.00	4.94	21.1	24.5	23.8	4.01
4x4	22.00	6.72	22.6	24.8	23.1	5.44
					Total Dry Weight, no spacers (lbs):	23.28
					Total Dry Weight, with spacers (lbs):	25.42

Spacer Moisture Readings (%DB)

11.6	11.9	11.7	11.9	8.1			
10.3	10.9	11.3	11.0	8.9			
11.3	8.5	9.5	9.5	11.2			
9.1	10.1	9.1	11.4	9.3			

Quality Checks	Requirement	Observed	Result
Fuel Density	25 - 36 (lbs/ft^3, DB)	29.9	OK
Loading Density	6.3 - 7.7 (lbs/ft^3, WB)	7.65	OK
2x4 Fuel Mix	35 - 65 % of total weight	N/A	N/A

DILUTION TUNNEL & MISC. DATA - ASTM E2780 / E2515

Client:	HHT	Job #:	24-253
Model:	Pioneer III	Tracking #:	180
Run #:	2	Technician:	SJB
Test Start Time:	13:09	Date:	2/7/2024

Total Sampling Time (min):	492	
Recording Interval (min):	1	
Meter Box γ Factor:	1.004	(A)
Meter Box γ Factor:	1.005	(B)
Meter Box γ Factor:	1.004	(C)
Meter Box γ Factor:	1.013	(Ambient)
Induced Draft Check (in. H_2O):	0	
Smoke Capture Check (%):	100%	
Date Flue Pipe Last Cleaned:	2/5/2024	
Test Fuel Scale Audit (lbs)	10.00	
Platform Scale Audit (lbs)	10.0	

	Pre-Test	Post Test	Avg.
Barometric Pressure (in. Hg)	29.58	29.75	29.67
Relative Humidity (%)	30.0	33.6	
Room Air Velocity (ft/min)	0	0	
Pitot Tube Leak Check	0	0	
Ambient Sample Volume:		40.653	ft^3

Sample Train Leak Checks

	Pre-test	Post-test			
(A)	0.000	0.001	cfm @	-5	in. Hg
(B)	0.001	0.000	cfm @	-5	in. Hg
(C)	0.002	0.001	cfm @	-5	in. Hg
(Ambient)	0.001	0.000	cfm @	-5	in. Hg

DILUTION TUNNEL FLOW

Traverse Data

Point	dP (in H_2O)	Temp (°F)
1	0.068	76
2	0.078	76
3	0.088	76
4	0.076	76
5	0.062	76
6	0.084	76
7	0.094	76
8	0.080	76
Center	0.086	76

Dilution Tunnel H_2O:	2.00	percent
Tunnel Diameter:	6	inches
Pitot Tube Cp:	0.99	[unitless]
Dilution Tunnel MW(dry):	29.00	lb/lb-mole
Dilution Tunnel MW(wet):	28.78	lb/lb-mole
Tunnel Area:	0.1963	ft^2
V_{strav}:	18.81	ft/sec
V_{scent}:	19.70	ft/sec
F_p:	0.955	[ratio]
Initial Tunnel Flow:	211.8	scf/min

Static Pressure: -0.145 in. H_2O

TEST FUEL PROPERTIES

Fuel Load Configuration

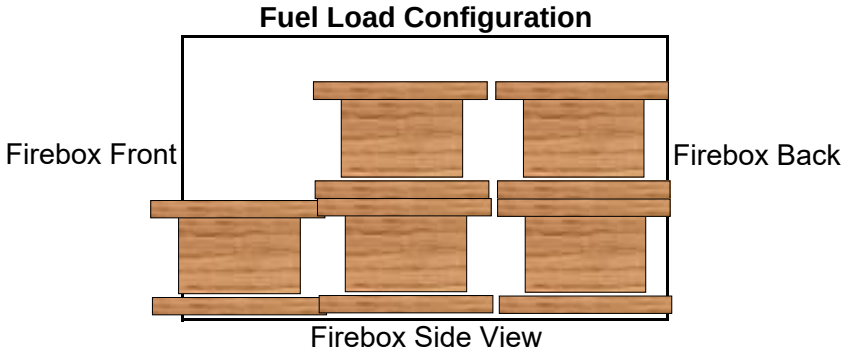

Actual Fuel Used Properties

Fuel Type:	D. Fir
HHV (kJ/kg)	19,810
%C	48.73
%H	6.87
%O	43.9
%Ash	0.5
MC (%DB)	23.2

WOODSTOVE PREBURN DATA - ASTM E2780

Client: HHT
Model: Pioneer III
Run #: 2

Job #: 24-253
Tracking #: 180
Technician: SJB
Date: 2/7/2024

Recording Interval (min): 1
Run Time (min): 69

			Temperatures (°F)							
Elapsed Time (min)	Scale Reading (lbs)	Flue Draft (in H_2O)	FB Left	FB Right	FB Back	FB Top	FB Bottom	Stove Surface Average	Flue	Ambient
0	23.84	-0.075	417	403	284	359	306	353.6	506	72
1	23.44	-0.077	415	400	277	373	306	354.4	563	72
2	23.03	-0.080	413	398	272	395	308	356.9	597	72
3	22.60	-0.080	411	396	267	413	309	359.1	616	72
4	22.19	-0.083	409	396	264	433	310	362.5	649	72
5	21.75	-0.083	407	396	262	450	310	365.1	667	72
6	21.33	-0.087	405	396	262	468	311	368.4	680	72
7	20.90	-0.084	403	396	261	482	311	370.8	677	72
8	20.46	-0.086	401	397	262	495	311	373.1	678	72
9	20.03	-0.086	399	397	263	514	312	376.9	684	72
10	19.57	-0.085	397	397	263	550	313	383.8	678	72
11	19.09	-0.085	395	397	264	584	313	390.5	669	72
12	18.64	-0.085	392	397	264	579	314	389.2	662	72
13	18.22	-0.085	391	398	266	571	314	387.8	671	72
14	17.80	-0.085	389	398	266	580	315	389.6	668	72
15	17.40	-0.083	387	399	267	574	316	388.8	659	72
16	16.98	-0.085	386	401	267	573	317	388.8	659	72
17	16.58	-0.084	385	403	268	591	318	392.8	656	72
18	16.19	-0.082	384	406	268	585	319	392.2	647	72
19	15.81	-0.083	383	409	268	582	320	392.4	631	72
20	15.43	-0.081	382	414	268	586	321	394.2	623	72
21	15.10	-0.080	382	419	268	587	322	395.4	624	72
22	14.77	-0.080	382	424	268	591	323	397.6	607	72
23	14.43	-0.080	382	430	268	597	324	400.3	599	73
24	14.12	-0.079	381	436	268	597	325	401.5	598	72
25	13.83	-0.079	381	442	268	605	325	404.2	597	72
26	13.55	-0.078	381	448	268	615	326	407.5	596	72
27	13.28	-0.078	381	453	268	580	326	401.6	597	72
28	12.99	-0.080	381	458	267	569	326	400.2	594	72
29	12.70	-0.077	382	463	266	571	326	401.5	588	72
30	12.43	-0.079	382	467	265	597	326	407.4	584	72
31	12.14	-0.076	382	470	265	651	326	418.7	582	72
32	11.87	-0.077	383	474	263	709	326	430.9	574	72
33	11.59	-0.077	383	477	262	683	325	426.2	573	72
34	11.33	-0.076	384	480	261	673	325	424.5	572	72
35	11.08	-0.075	384	482	260	720	325	434.4	569	72
36	10.85	-0.077	385	484	259	690	324	428.5	573	72
37	10.63	-0.076	386	486	258	671	324	425.0	570	72
38	10.43	-0.074	387	488	257	658	323	422.5	562	72
39	10.24	-0.074	388	489	256	640	322	419.0	560	72
40	10.03	-0.073	388	491	255	670	322	425.0	550	72
41	9.83	-0.074	390	491	255	712	320	433.8	545	73
42	9.64	-0.074	391	492	255	689	320	429.1	542	73
43	9.43	-0.072	393	492	254	727	319	436.9	545	72
44	9.23	-0.072	394	492	254	742	318	439.9	544	73

WOODSTOVE PREBURN DATA - ASTM E2780

Client: HHT
Model: Pioneer III
Run #: 2

Job #: 24-253
Tracking #: 180
Technician: SJB
Date: 2/7/2024

Recording Interval (min): 1
Run Time (min): 69

			Temperatures (°F)							
Elapsed Time (min)	Scale Reading (lbs)	Flue Draft (in H_2O)	FB Left	FB Right	FB Back	FB Top	FB Bottom	Stove Surface Average	Flue	Ambient
45	9.03	-0.073	396	492	253	747	317	440.9	543	72
46	8.83	-0.071	398	491	252	755	316	442.5	544	72
47	8.66	-0.071	400	491	253	747	316	441.3	538	72
48	8.46	-0.073	401	490	253	710	315	433.9	534	73
49	8.28	-0.072	404	490	253	708	314	433.7	540	73
50	8.12	-0.072	407	488	253	703	313	432.7	538	73
51	7.96	-0.072	410	487	254	693	313	431.2	535	73
52	7.81	-0.072	412	487	255	681	311	429.2	535	73
53	7.67	-0.071	415	486	255	669	311	427.1	530	73
54	7.56	-0.069	418	485	255	654	310	424.3	529	73
55	7.44	-0.070	420	483	256	629	309	419.5	519	73
56	7.33	-0.070	424	482	256	600	308	413.9	512	73
57	7.22	-0.069	426	481	257	574	306	408.9	508	73
58	7.12	-0.068	428	480	258	554	306	405.1	504	73
59	7.01	-0.067	431	479	259	532	304	400.9	495	72
60	6.92	-0.067	432	478	259	509	303	396.2	488	73
61	6.82	-0.065	434	477	261	490	302	392.8	480	73
62	6.72	-0.065	436	476	262	472	302	389.5	473	73
63	6.64	-0.063	438	475	264	463	301	388.0	458	73
64	6.58	-0.062	439	473	266	453	299	385.9	444	72
65	6.51	-0.059	440	472	268	444	298	384.5	431	71
66	6.45	-0.061	441	471	271	435	297	383.0	424	70
67	6.39	-0.058	443	470	274	427	296	381.8	416	70
68	6.34	-0.058	444	469	277	418	296	380.5	411	70
69	6.28	-0.060	445	467	280	409	295	379.1	406	70

BOX A TEST DATA - ASTM E2780 / ASTM E2515

Client: HHT
Model: Pioneer III
Run #: 2

Job #: 24-253
Tracking #: 180
Technician: SJB
Date: 2/7/2024

	Particulate Sampling Data							Fuel Weight (lb)		Temperature Data (°F)			
Elapsed Time (min)	Gas Meter (ft^3)	Sample Rate (cfm)	Dilution Tunnel dP (in H_2O)	Orifice dH (in H_2O)	Meter Temp (°F)	Meter Vacuum (in Hg)	Pro. Rate (%)	Scale Reading	Weight Change	Dilution Tunnel	Flue	Filter	Ambient
0	0.000		0.082	0.00	75	0.1		31.04		145	346	56	70
1	0.113	0.113	0.082	2.70	75	1.1	-	30.88	-0.16	182	380	69	71
2	0.279	0.166	0.081	2.72	75	1.1	-	30.26	-0.62	276	644	84	70
3	0.438	0.159	0.085	2.64	75	1.1	-	29.72	-0.54	241	619	79	71
4	0.600	0.162	0.082	2.67	75	1.1	-	29.35	-0.37	213	608	81	71
5	0.763	0.163	0.080	2.70	76	1.2	-	28.65	-0.70	255	951	88	71
6	0.924	0.161	0.082	2.72	76	1.2	-	28.36	-0.29	196	688	82	71
7	1.088	0.164	0.080	2.74	76	1.1	-	28.05	-0.31	175	629	82	71
8	1.254	0.166	0.080	2.75	76	1.1	-	27.77	-0.28	165	587	81	71
9	1.413	0.159	0.080	2.77	76	1.2	-	27.53	-0.24	159	569	81	71
10	1.581	0.168	0.079	2.78	76	1.2	95	27.28	-0.25	155	561	81	71
11	1.748	0.167	0.082	2.81	76	1.2	-	27.03	-0.25	152	556	81	71
12	1.915	0.167	0.081	2.82	77	1.1	-	26.76	-0.27	151	554	81	71
13	2.083	0.168	0.081	2.84	77	1.2	-	26.51	-0.25	150	554	81	71
14	2.253	0.170	0.079	2.86	77	1.1	-	26.25	-0.26	150	562	81	71
15	2.415	0.162	0.080	2.89	77	1.1	-	26.02	-0.23	148	560	81	71
16	2.587	0.172	0.082	2.90	78	1.1	-	25.80	-0.22	145	527	80	71
17	2.758	0.171	0.081	2.91	78	1.2	-	25.59	-0.21	141	479	80	71
18	2.926	0.168	0.081	2.92	78	1.1	-	25.36	-0.23	139	470	80	71
19	3.096	0.170	0.080	2.93	79	1.1	-	25.12	-0.24	140	514	80	71
20	3.269	0.173	0.081	2.95	79	1.1	101	24.86	-0.26	142	542	81	71
21	3.437	0.168	0.082	2.95	79	1.2	-	24.62	-0.24	144	560	81	71
22	3.606	0.169	0.081	2.97	80	1.2	-	24.36	-0.26	144	560	81	71
23	3.780	0.174	0.082	2.99	80	1.2	-	24.13	-0.23	143	557	80	71
24	3.953	0.173	0.083	3.00	80	1.2	-	23.90	-0.23	142	544	80	71
25	4.124	0.171	0.082	3.01	81	1.2	-	23.69	-0.21	141	537	80	70
26	4.297	0.173	0.081	3.02	81	1.2	-	23.47	-0.22	140	537	80	70
27	4.472	0.175	0.079	3.03	81	1.2	-	23.24	-0.23	139	536	80	71
28	4.645	0.173	0.081	3.03	82	1.2	-	23.05	-0.19	139	534	80	71
29	4.816	0.171	0.082	3.04	82	1.2	-	22.84	-0.21	138	535	80	71
30	4.990	0.174	0.081	3.05	82	1.2	101	22.63	-0.21	138	533	80	71
31	5.166	0.176	0.081	3.05	83	1.2	-	22.42	-0.21	136	523	80	71

BOX A TEST DATA - ASTM E2780 / ASTM E2515

Client: HHT
Model: Pioneer III
Run #: 2

Job #: 24-253
Tracking #: 180
Technician: SJB
Date: 2/7/2024

	Particulate Sampling Data							Fuel Weight (lb)		Temperature Data (°F)			
Elapsed Time (min)	Gas Meter (ft^3)	Sample Rate (cfm)	Dilution Tunnel dP (in H_2O)	Orifice dH (in H_2O)	Meter Temp (°F)	Meter Vacuum (in Hg)	Pro. Rate (%)	Scale Reading	Weight Change	Dilution Tunnel	Flue	Filter	Ambient
32	5.339	0.173	0.081	3.05	83	1.2	-	22.22	-0.20	135	508	79	71
33	5.511	0.172	0.081	3.06	83	1.2	-	22.02	-0.20	134	508	79	71
34	5.687	0.176	0.082	3.06	84	1.2	-	21.80	-0.22	134	507	79	71
35	5.863	0.176	0.082	3.07	84	1.2	-	21.60	-0.20	134	510	79	71
36	6.037	0.174	0.082	3.06	84	1.2	-	21.39	-0.21	134	514	79	71
37	6.210	0.173	0.080	3.08	85	1.2	-	21.18	-0.21	134	525	80	71
38	6.386	0.176	0.081	3.08	85	1.2	-	20.96	-0.22	135	526	80	71
39	6.563	0.177	0.083	3.08	85	1.2	-	20.75	-0.21	135	529	80	71
40	6.737	0.174	0.080	3.08	86	1.2	102	20.52	-0.23	135	531	80	71
41	6.911	0.174	0.081	3.09	86	1.2	-	20.31	-0.21	135	534	80	71
42	7.087	0.176	0.081	3.10	86	1.2	-	20.09	-0.22	135	530	80	71
43	7.265	0.178	0.081	3.09	87	1.2	-	19.89	-0.20	135	529	80	70
44	7.440	0.175	0.082	3.11	87	1.2	-	19.67	-0.22	134	523	80	71
45	7.611	0.171	0.081	3.10	87	1.2	-	19.46	-0.21	134	524	80	71
46	7.791	0.180	0.080	3.10	87	1.2	-	19.24	-0.22	134	526	80	71
47	7.970	0.179	0.082	3.11	88	1.2	-	19.04	-0.20	134	524	80	71
48	8.143	0.173	0.080	3.11	88	1.2	-	18.83	-0.21	134	524	81	71
49	8.318	0.175	0.082	3.12	88	1.2	-	18.61	-0.22	134	525	81	71
50	8.497	0.179	0.082	3.12	89	1.2	102	18.41	-0.20	133	522	81	71
51	8.676	0.179	0.080	3.12	89	1.2	-	18.20	-0.21	133	516	81	71
52	8.854	0.178	0.081	3.13	89	1.2	-	17.99	-0.21	133	517	82	70
53	9.029	0.175	0.080	3.13	90	1.2	-	17.77	-0.22	133	516	82	70
54	9.205	0.176	0.080	3.13	90	1.2	-	17.57	-0.20	134	518	82	71
55	9.385	0.180	0.079	3.14	90	1.2	-	17.37	-0.20	134	516	82	71
56	9.561	0.176	0.081	3.13	90	1.2	-	17.16	-0.21	133	515	82	71
57	9.741	0.180	0.081	3.14	91	1.2	-	16.94	-0.22	132	517	82	70
58	9.918	0.177	0.079	3.15	91	1.2	-	16.74	-0.20	132	516	82	71
59	10.095	0.177	0.079	3.15	91	1.2	-	16.55	-0.19	131	510	82	70
60	10.274	0.179	0.082	3.15	91	1.2	101	16.34	-0.21	130	504	82	70
61	10.454	0.180	0.081	3.15	92	1.2	-	16.16	-0.18	129	495	82	70
62	10.631	0.177	0.081	3.14	92	1.2	-	15.97	-0.19	128	492	82	70
63	10.809	0.178	0.080	3.18	92	1.2	-	15.79	-0.18	126	482	81	70

BOX A TEST DATA - ASTM E2780 / ASTM E2515

Client: HHT
Model: Pioneer III
Run #: 2

Job #: 24-253
Tracking #: 180
Technician: SJB
Date: 2/7/2024

	Particulate Sampling Data							Fuel Weight (lb)		Temperature Data (°F)			
Elapsed Time (min)	Gas Meter (ft^3)	Sample Rate (cfm)	Dilution Tunnel dP (in H_2O)	Orifice dH (in H_2O)	Meter Temp (°F)	Meter Vacuum (in Hg)	Pro. Rate (%)	Scale Reading	Weight Change	Dilution Tunnel	Flue	Filter	Ambient
64	10.989	0.180	0.081	3.15	92	1.2	-	15.61	-0.18	125	478	81	69
65	11.170	0.181	0.081	3.17	93	1.2	-	15.43	-0.18	125	473	81	69
66	11.346	0.176	0.080	3.16	93	1.2	-	15.27	-0.16	124	474	81	69
67	11.526	0.180	0.082	3.18	93	1.2	-	15.09	-0.18	124	471	81	69
68	11.705	0.179	0.082	3.18	93	1.2	-	14.92	-0.17	123	463	81	69
69	11.883	0.178	0.081	3.18	93	1.2	-	14.74	-0.18	123	468	81	69
70	12.068	0.185	0.081	3.19	94	1.2	102	14.56	-0.18	123	464	81	69
71	12.247	0.179	0.081	3.18	94	1.2	-	14.40	-0.16	122	464	81	69
72	12.424	0.177	0.082	3.19	94	1.2	-	14.24	-0.16	122	459	81	69
73	12.600	0.176	0.082	3.17	94	1.2	-	14.07	-0.17	121	460	81	69
74	12.782	0.182	0.081	3.20	94	1.2	-	13.90	-0.17	121	461	81	69
75	12.968	0.186	0.079	3.21	94	1.2	-	13.74	-0.16	121	461	81	68
76	13.147	0.179	0.081	3.19	95	1.2	-	13.57	-0.17	121	461	81	68
77	13.325	0.178	0.082	3.19	95	1.2	-	13.41	-0.16	121	461	81	69
78	13.505	0.180	0.082	3.20	95	1.2	-	13.25	-0.16	120	460	81	69
79	13.687	0.182	0.079	3.21	95	1.2	-	13.09	-0.16	121	463	81	69
80	13.869	0.182	0.081	3.21	95	1.2	102	12.93	-0.16	120	460	81	69
81	14.049	0.180	0.082	3.21	95	1.2	-	12.77	-0.16	120	459	81	69
82	14.228	0.179	0.081	3.21	96	1.2	-	12.62	-0.15	120	465	81	69
83	14.408	0.180	0.080	3.20	96	1.2	-	12.46	-0.16	121	471	81	69
84	14.590	0.182	0.080	3.21	96	1.2	-	12.29	-0.17	121	474	81	69
85	14.771	0.181	0.079	3.21	96	1.2	-	12.13	-0.16	121	479	81	70
86	14.953	0.182	0.080	3.21	96	1.2	-	11.97	-0.16	121	480	81	69
87	15.134	0.181	0.081	3.21	96	1.2	-	11.83	-0.14	121	480	81	69
88	15.313	0.179	0.080	3.21	96	1.2	-	11.68	-0.15	121	480	81	69
89	15.493	0.180	0.080	3.21	97	1.2	-	11.52	-0.16	121	479	81	69
90	15.675	0.182	0.081	3.20	97	1.2	102	11.38	-0.14	121	480	81	69
91	15.859	0.184	0.081	3.22	97	1.2	-	11.23	-0.15	121	484	81	69
92	16.041	0.182	0.082	3.22	97	1.2	-	11.07	-0.16	120	479	81	70
93	16.219	0.178	0.078	3.21	97	1.2	-	10.92	-0.15	120	479	81	69
94	16.399	0.180	0.080	3.22	97	1.2	-	10.77	-0.15	120	479	81	69
95	16.583	0.184	0.082	3.22	97	1.2	-	10.61	-0.16	120	476	81	69

BOX A TEST DATA - ASTM E2780 / ASTM E2515

Client: HHT
Model: Pioneer III
Run #: 2

Job #: 24-253
Tracking #: 180
Technician: SJB
Date: 2/7/2024

	Particulate Sampling Data							Fuel Weight (lb)		Temperature Data (°F)			
Elapsed Time (min)	Gas Meter (ft^3)	Sample Rate (cfm)	Dilution Tunnel dP (in H_2O)	Orifice dH (in H_2O)	Meter Temp (°F)	Meter Vacuum (in Hg)	Pro. Rate (%)	Scale Reading	Weight Change	Dilution Tunnel	Flue	Filter	Ambient
96	16.763	0.180	0.081	3.22	97	1.2	-	10.47	-0.14	120	471	81	69
97	16.947	0.184	0.080	3.23	97	1.2	-	10.33	-0.14	120	466	81	69
98	17.124	0.177	0.079	3.22	98	1.2	-	10.20	-0.13	120	463	81	69
99	17.309	0.185	0.081	3.23	98	1.2	-	10.06	-0.14	120	459	81	69
100	17.488	0.179	0.081	3.24	98	1.2	102	9.93	-0.13	119	457	81	69
101	17.673	0.185	0.082	3.23	98	1.2	-	9.78	-0.15	119	457	81	69
102	17.857	0.184	0.081	3.22	98	1.2	-	9.64	-0.14	119	457	81	70
103	18.039	0.182	0.080	3.24	98	1.2	-	9.52	-0.12	119	456	81	70
104	18.218	0.179	0.079	3.24	98	1.2	-	9.38	-0.14	118	454	81	70
105	18.396	0.178	0.079	3.24	98	1.2	-	9.27	-0.11	118	455	81	70
106	18.580	0.184	0.081	3.24	98	1.2	-	9.14	-0.13	118	456	81	70
107	18.766	0.186	0.080	3.25	99	1.2	-	9.00	-0.14	118	453	81	70
108	18.949	0.183	0.082	3.25	99	1.2	-	8.88	-0.12	118	456	81	70
109	19.131	0.182	0.080	3.25	99	1.2	-	8.77	-0.11	118	457	81	70
110	19.312	0.181	0.079	3.25	99	1.2	103	8.63	-0.14	118	459	81	70
111	19.493	0.181	0.079	3.26	99	1.2	-	8.51	-0.12	118	460	81	69
112	19.674	0.181	0.082	3.25	99	1.2	-	8.38	-0.13	118	463	81	70
113	19.859	0.185	0.081	3.25	99	1.2	-	8.27	-0.11	118	464	81	70
114	20.044	0.185	0.083	3.25	99	1.2	-	8.14	-0.13	118	462	81	70
115	20.225	0.181	0.081	3.25	99	1.2	-	8.02	-0.12	118	460	81	71
116	20.404	0.179	0.082	3.26	99	1.2	-	7.89	-0.13	118	464	81	71
117	20.589	0.185	0.082	3.26	99	1.2	-	7.75	-0.14	118	462	81	71
118	20.770	0.181	0.083	3.26	99	1.2	-	7.63	-0.12	118	466	81	71
119	20.958	0.188	0.082	3.26	100	1.2	-	7.51	-0.12	118	467	81	71
120	21.140	0.182	0.083	3.26	100	1.2	102	7.38	-0.13	118	468	81	71
121	21.320	0.180	0.082	3.26	100	1.2	-	7.25	-0.13	118	468	81	71
122	21.503	0.183	0.083	3.26	100	1.2	-	7.12	-0.13	118	468	81	71
123	21.686	0.183	0.081	3.26	100	1.2	-	7.00	-0.12	118	460	81	71
124	21.870	0.184	0.080	3.26	100	1.2	-	6.89	-0.11	118	453	81	71
125	22.055	0.185	0.081	3.26	100	1.2	-	6.76	-0.13	117	450	81	71
126	22.235	0.180	0.079	3.28	100	1.2	-	6.67	-0.09	116	445	81	71
127	22.418	0.183	0.080	3.26	100	1.2	-	6.56	-0.11	116	437	81	71

BOX A TEST DATA - ASTM E2780 / ASTM E2515

Client: HHT
Model: Pioneer III
Run #: 2

Job #: 24-253
Tracking #: 180
Technician: SJB
Date: 2/7/2024

	Particulate Sampling Data							Fuel Weight (lb)		Temperature Data (°F)			
Elapsed Time (min)	Gas Meter (ft^3)	Sample Rate (cfm)	Dilution Tunnel dP (in H_2O)	Orifice dH (in H_2O)	Meter Temp (°F)	Meter Vacuum (in Hg)	Pro. Rate (%)	Scale Reading	Weight Change	Dilution Tunnel	Flue	Filter	Ambient
128	22.601	0.183	0.083	3.27	100	1.2	-	6.46	-0.10	116	433	81	71
129	22.785	0.184	0.081	3.28	100	1.2	-	6.37	-0.09	115	433	81	71
130	22.968	0.183	0.081	3.27	100	1.2	101	6.27	-0.10	115	440	81	71
131	23.150	0.182	0.079	3.25	100	1.2	-	6.17	-0.10	116	454	81	71
132	23.333	0.183	0.079	3.26	100	1.2	-	6.07	-0.10	116	461	81	71
133	23.517	0.184	0.080	3.26	100	1.2	-	5.98	-0.09	116	463	81	71
134	23.700	0.183	0.081	3.25	100	1.2	-	5.88	-0.10	117	467	81	71
135	23.884	0.184	0.079	3.26	101	1.2	-	5.78	-0.10	117	465	82	71
136	24.067	0.183	0.080	3.26	101	1.2	-	5.69	-0.09	117	462	82	71
137	24.253	0.186	0.078	3.26	101	1.2	-	5.61	-0.08	116	456	82	72
138	24.436	0.183	0.080	3.27	101	1.2	-	5.53	-0.08	116	448	82	72
139	24.617	0.181	0.079	3.27	101	1.2	-	5.46	-0.07	115	433	82	71
140	24.800	0.183	0.079	3.27	101	1.2	102	5.38	-0.08	114	423	82	71
141	24.984	0.184	0.081	3.27	101	1.2	-	5.31	-0.07	113	417	82	71
142	25.168	0.184	0.080	3.28	101	1.2	-	5.27	-0.04	113	411	81	71
143	25.354	0.186	0.082	3.27	101	1.2	-	5.20	-0.07	112	402	81	71
144	25.536	0.182	0.081	3.26	101	1.2	-	5.14	-0.06	111	397	81	71
145	25.718	0.182	0.079	3.25	101	1.2	-	5.09	-0.05	111	390	81	72
146	25.901	0.183	0.079	3.25	101	1.2	-	5.04	-0.05	110	383	81	71
147	26.084	0.183	0.081	3.27	101	1.2	-	4.99	-0.05	109	373	81	71
148	26.269	0.185	0.079	3.26	101	1.2	-	4.94	-0.05	109	367	81	71
149	26.455	0.186	0.079	3.25	101	1.2	-	4.89	-0.05	108	361	81	71
150	26.637	0.182	0.080	3.25	101	1.2	102	4.85	-0.04	107	358	81	71
151	26.820	0.183	0.079	3.23	101	1.2	-	4.80	-0.05	107	355	81	71
152	27.004	0.184	0.077	3.23	101	1.2	-	4.77	-0.03	107	351	81	71
153	27.187	0.183	0.082	3.22	101	1.2	-	4.75	-0.02	102	307	80	71
154	27.372	0.185	0.082	3.25	101	1.1	-	4.72	-0.03	99	277	80	71
155	27.558	0.186	0.080	3.26	102	1.2	-	4.71	-0.01	97	262	80	71
156	27.741	0.183	0.080	3.28	102	1.2	-	4.70	-0.01	96	251	80	71
157	27.925	0.184	0.082	3.27	102	1.2	-	4.68	-0.02	95	244	80	71
158	28.105	0.180	0.082	3.27	102	1.2	-	4.67	-0.01	94	239	80	71
159	28.290	0.185	0.081	3.27	102	1.2	-	4.66	-0.01	94	234	79	71

BOX A TEST DATA - ASTM E2780 / ASTM E2515

Client: HHT
Model: Pioneer III
Run #: 2

Job #: 24-253
Tracking #: 180
Technician: SJB
Date: 2/7/2024

	Particulate Sampling Data							Fuel Weight (lb)		Temperature Data (°F)			
Elapsed Time (min)	Gas Meter (ft^3)	Sample Rate (cfm)	Dilution Tunnel dP (in H_2O)	Orifice dH (in H_2O)	Meter Temp (°F)	Meter Vacuum (in Hg)	Pro. Rate (%)	Scale Reading	Weight Change	Dilution Tunnel	Flue	Filter	Ambient
160	28.476	0.186	0.083	3.28	102	1.2	100	4.64	-0.02	93	229	79	71
161	28.661	0.185	0.082	3.28	102	1.2	-	4.63	-0.01	93	226	79	71
162	28.843	0.182	0.081	3.27	102	1.2	-	4.62	-0.01	92	222	79	71
163	29.031	0.188	0.082	3.28	102	1.2	-	4.59	-0.03	92	220	79	70
164	29.212	0.181	0.081	3.27	102	1.2	-	4.60	0.01	92	217	79	70
165	29.397	0.185	0.081	3.27	102	1.2	-	4.59	-0.01	91	215	79	71
166	29.581	0.184	0.081	3.28	102	1.2	-	4.57	-0.02	91	212	79	71
167	29.763	0.182	0.082	3.28	102	1.2	-	4.56	-0.01	90	210	78	71
168	29.950	0.187	0.081	3.27	102	1.2	-	4.54	-0.02	90	207	78	70
169	30.136	0.186	0.083	3.28	102	1.2	-	4.53	-0.01	90	206	78	70
170	30.320	0.184	0.081	3.28	102	1.2	99	4.52	-0.01	89	204	78	70
171	30.503	0.183	0.083	3.29	102	1.2	-	4.51	-0.01	89	202	78	70
172	30.686	0.183	0.083	3.29	102	1.2	-	4.50	-0.01	89	201	78	70
173	30.873	0.187	0.082	3.29	102	1.2	-	4.49	-0.01	89	199	78	70
174	31.058	0.185	0.082	3.28	102	1.2	-	4.49	0.00	88	197	77	70
175	31.243	0.185	0.082	3.29	102	1.2	-	4.47	-0.02	88	194	77	70
176	31.429	0.186	0.083	3.27	102	1.2	-	4.46	-0.01	88	192	77	70
177	31.610	0.181	0.080	3.28	102	1.2	-	4.45	-0.01	88	191	77	70
178	31.795	0.185	0.077	3.28	102	1.2	-	4.43	-0.02	88	190	77	70
179	31.979	0.184	0.077	3.29	102	1.2	-	4.42	-0.01	87	189	77	69
180	32.164	0.185	0.080	3.29	102	1.2	100	4.41	-0.01	87	188	77	69
181	32.351	0.187	0.081	3.28	103	1.2	-	4.40	-0.01	87	186	77	69
182	32.535	0.184	0.082	3.29	103	1.2	-	4.39	-0.01	87	186	77	69
183	32.719	0.184	0.082	3.27	102	1.2	-	4.38	-0.01	87	186	77	69
184	32.900	0.181	0.083	3.27	102	1.2	-	4.36	-0.02	87	185	77	69
185	33.086	0.186	0.082	3.27	103	1.2	-	4.36	0.00	86	183	76	69
186	33.273	0.187	0.080	3.26	103	1.2	-	4.34	-0.02	86	182	76	69
187	33.458	0.185	0.084	3.26	103	1.2	-	4.33	-0.01	86	181	76	69
188	33.644	0.186	0.082	3.25	103	1.2	-	4.33	0.00	86	180	76	69
189	33.829	0.185	0.080	3.26	103	1.2	-	4.31	-0.02	86	179	76	69
190	34.008	0.179	0.083	3.26	103	1.2	99	4.30	-0.01	86	178	76	69
191	34.195	0.187	0.082	3.24	103	1.1	-	4.29	-0.01	86	176	76	69

BOX A TEST DATA - ASTM E2780 / ASTM E2515

Client: HHT
Model: Pioneer III
Run #: 2

Job #: 24-253
Tracking #: 180
Technician: SJB
Date: 2/7/2024

	Particulate Sampling Data							Fuel Weight (lb)		Temperature Data (°F)			
Elapsed Time (min)	Gas Meter (ft^3)	Sample Rate (cfm)	Dilution Tunnel dP (in H_2O)	Orifice dH (in H_2O)	Meter Temp (°F)	Meter Vacuum (in Hg)	Pro. Rate (%)	Scale Reading	Weight Change	Dilution Tunnel	Flue	Filter	Ambient
192	34.379	0.184	0.082	3.26	103	1.2	-	4.28	-0.01	85	175	76	69
193	34.566	0.187	0.082	3.26	103	1.2	-	4.27	-0.01	85	173	76	69
194	34.752	0.186	0.081	3.25	103	1.2	-	4.25	-0.02	85	173	76	69
195	34.936	0.184	0.083	3.27	103	1.2	-	4.26	0.01	85	172	76	69
196	35.121	0.185	0.080	3.26	103	1.2	-	4.24	-0.02	85	171	76	69
197	35.303	0.182	0.083	3.26	103	1.2	-	4.23	-0.01	85	171	75	69
198	35.487	0.184	0.083	3.27	103	1.2	-	4.22	-0.01	85	169	75	69
199	35.674	0.187	0.083	3.28	103	1.2	-	4.21	-0.01	84	167	75	69
200	35.856	0.182	0.084	3.29	103	1.2	98	4.20	-0.01	84	166	75	69
201	36.046	0.190	0.083	3.27	103	1.2	-	4.19	-0.01	84	166	75	69
202	36.230	0.184	0.081	3.29	103	1.2	-	4.18	-0.01	84	165	75	69
203	36.413	0.183	0.082	3.29	103	1.2	-	4.17	-0.01	84	167	75	69
204	36.594	0.181	0.083	3.29	103	1.2	-	4.16	-0.01	84	167	75	69
205	36.778	0.184	0.082	3.29	103	1.2	-	4.15	-0.01	84	168	75	69
206	36.968	0.190	0.081	3.28	103	1.2	-	4.14	-0.01	84	168	75	69
207	37.154	0.186	0.083	3.29	103	1.2	-	4.13	-0.01	84	167	75	69
208	37.339	0.185	0.082	3.28	103	1.2	-	4.11	-0.02	84	166	75	69
209	37.525	0.186	0.083	3.29	103	1.2	-	4.08	-0.03	84	166	75	69
210	37.703	0.178	0.066	3.30	103	1.2	103	4.03	-0.05	83	167	75	67
211	37.892	0.189	0.071	3.29	103	1.2	-	4.00	-0.03	83	167	75	66
212	38.076	0.184	0.069	3.29	103	1.1	-	3.96	-0.04	83	167	75	65
213	38.262	0.186	0.078	3.30	103	1.1	-	3.95	-0.01	82	167	74	64
214	38.449	0.187	0.080	3.29	103	1.1	-	3.93	-0.02	82	168	74	64
215	38.633	0.184	0.075	3.29	103	1.2	-	3.91	-0.02	82	168	74	63
216	38.818	0.185	0.077	3.29	103	1.1	-	3.89	-0.02	82	169	74	63
217	39.000	0.182	0.078	3.30	103	1.1	-	3.87	-0.02	81	167	74	62
218	39.185	0.185	0.079	3.28	103	1.2	-	3.86	-0.01	81	166	73	62
219	39.372	0.187	0.080	3.29	103	1.2	-	3.85	-0.01	82	166	73	62
220	39.556	0.184	0.080	3.28	103	1.2	105	3.84	-0.01	83	166	73	61
221	39.743	0.187	0.075	3.27	103	1.2	-	3.81	-0.03	83	165	73	61
222	39.927	0.184	0.086	3.25	103	1.2	-	3.83	0.02	83	165	73	61
223	40.111	0.184	0.088	3.26	103	1.2	-	3.82	-0.01	83	164	73	62

BOX A TEST DATA - ASTM E2780 / ASTM E2515

Client: HHT
Model: Pioneer III
Run #: 2

Job #: 24-253
Tracking #: 180
Technician: SJB
Date: 2/7/2024

	Particulate Sampling Data							Fuel Weight (lb)		Temperature Data (°F)			
Elapsed Time (min)	Gas Meter (ft^3)	Sample Rate (cfm)	Dilution Tunnel dP (in H_2O)	Orifice dH (in H_2O)	Meter Temp (°F)	Meter Vacuum (in Hg)	Pro. Rate (%)	Scale Reading	Weight Change	Dilution Tunnel	Flue	Filter	Ambient
224	40.295	0.184	0.089	3.28	102	1.2	-	3.83	0.01	83	164	73	62
225	40.479	0.184	0.088	3.29	102	1.2	-	3.82	-0.01	83	164	73	63
226	40.662	0.183	0.086	3.28	102	1.2	-	3.80	-0.02	83	164	72	63
227	40.849	0.187	0.086	3.30	102	1.2	-	3.80	0.00	83	163	72	63
228	41.036	0.187	0.085	3.29	102	1.1	-	3.80	0.00	83	163	72	64
229	41.221	0.185	0.086	3.28	102	1.2	-	3.79	-0.01	83	163	72	64
230	41.399	0.178	0.085	3.28	102	1.2	98	3.78	-0.01	83	163	72	64
231	41.587	0.188	0.084	3.28	102	1.2	-	3.77	-0.01	82	164	72	64
232	41.772	0.185	0.085	3.30	102	1.1	-	3.75	-0.02	82	163	72	64
233	41.954	0.182	0.084	3.30	102	1.2	-	3.74	-0.01	82	162	72	65
234	42.144	0.190	0.084	3.29	101	1.2	-	3.74	0.00	82	161	72	65
235	42.327	0.183	0.082	3.29	101	1.2	-	3.73	-0.01	82	162	72	65
236	42.512	0.185	0.084	3.28	101	1.1	-	3.72	-0.01	82	162	72	65
237	42.695	0.183	0.082	3.28	101	1.2	-	3.71	-0.01	81	161	72	65
238	42.878	0.183	0.083	3.28	101	1.1	-	3.70	-0.01	81	160	72	65
239	43.065	0.187	0.081	3.27	101	1.1	-	3.69	-0.01	81	160	72	65
240	43.250	0.185	0.084	3.25	101	1.1	97	3.67	-0.02	81	161	72	66
241	43.435	0.185	0.082	3.27	101	1.2	-	3.66	-0.01	81	160	72	66
242	43.620	0.185	0.082	3.25	101	1.2	-	3.66	0.00	81	159	72	66
243	43.802	0.182	0.079	3.25	101	1.2	-	3.65	-0.01	81	160	72	66
244	43.987	0.185	0.084	3.27	101	1.2	-	3.63	-0.02	81	160	72	66
245	44.171	0.184	0.083	3.27	101	1.2	-	3.62	-0.01	81	160	72	66
246	44.356	0.185	0.081	3.24	101	1.2	-	3.61	-0.01	81	160	72	66
247	44.540	0.184	0.082	3.26	101	1.1	-	3.61	0.00	81	159	72	66
248	44.727	0.187	0.080	3.27	101	1.2	-	3.60	-0.01	81	158	72	66
249	44.907	0.180	0.083	3.28	101	1.2	-	3.59	-0.01	81	159	72	67
250	45.094	0.187	0.083	3.29	101	1.2	98	3.58	-0.01	81	158	72	67
251	45.277	0.183	0.083	3.27	101	1.2	-	3.56	-0.02	81	158	72	67
252	45.463	0.186	0.081	3.28	101	1.1	-	3.55	-0.01	81	158	72	66
253	45.648	0.185	0.082	3.28	101	1.2	-	3.54	-0.01	81	157	72	66
254	45.834	0.186	0.082	3.29	101	1.2	-	3.53	-0.01	81	156	72	67
255	46.019	0.185	0.082	3.28	101	1.2	-	3.52	-0.01	81	157	72	67

BOX A TEST DATA - ASTM E2780 / ASTM E2515

Client: HHT
Model: Pioneer III
Run #: 2

Job #: 24-253
Tracking #: 180
Technician: SJB
Date: 2/7/2024

	Particulate Sampling Data							Fuel Weight (lb)		Temperature Data (°F)			
Elapsed Time (min)	Gas Meter (ft^3)	Sample Rate (cfm)	Dilution Tunnel dP (in H_2O)	Orifice dH (in H_2O)	Meter Temp (°F)	Meter Vacuum (in Hg)	Pro. Rate (%)	Scale Reading	Weight Change	Dilution Tunnel	Flue	Filter	Ambient
256	46.196	0.177	0.083	3.29	101	1.2	-	3.51	-0.01	81	156	72	67
257	46.385	0.189	0.082	3.27	101	1.1	-	3.49	-0.02	81	156	72	67
258	46.569	0.184	0.082	3.30	101	1.2	-	3.49	0.00	81	157	72	67
259	46.754	0.185	0.082	3.28	101	1.2	-	3.48	-0.01	80	156	72	67
260	46.941	0.187	0.083	3.28	101	1.2	98	3.46	-0.02	80	156	72	67
261	47.124	0.183	0.082	3.30	101	1.1	-	3.45	-0.01	80	155	72	67
262	47.304	0.180	0.082	3.28	101	1.2	-	3.43	-0.02	80	155	72	67
263	47.492	0.188	0.082	3.28	101	1.2	-	3.43	0.00	80	155	72	67
264	47.675	0.183	0.080	3.28	101	1.1	-	3.42	-0.01	80	154	72	67
265	47.861	0.186	0.082	3.28	101	1.1	-	3.41	-0.01	80	153	72	67
266	48.044	0.183	0.084	3.29	101	1.2	-	3.40	-0.01	80	152	72	67
267	48.231	0.187	0.084	3.29	101	1.1	-	3.38	-0.02	80	152	72	67
268	48.416	0.185	0.082	3.29	101	1.2	-	3.38	0.00	80	151	72	67
269	48.594	0.178	0.080	3.27	101	1.2	-	3.37	-0.01	79	149	72	67
270	48.782	0.188	0.082	3.25	101	1.2	98	3.36	-0.01	79	149	72	67
271	48.967	0.185	0.083	3.28	101	1.2	-	3.35	-0.01	79	149	72	67
272	49.152	0.185	0.083	3.24	101	1.2	-	3.34	-0.01	79	148	72	67
273	49.338	0.186	0.081	3.26	101	1.2	-	3.32	-0.02	79	148	72	67
274	49.519	0.181	0.082	3.28	101	1.2	-	3.32	0.00	79	149	72	67
275	49.701	0.182	0.082	3.26	101	1.2	-	3.30	-0.02	79	149	72	67
276	49.889	0.188	0.082	3.29	101	1.2	-	3.30	0.00	79	148	72	67
277	50.072	0.183	0.082	3.28	101	1.2	-	3.29	-0.01	79	148	72	67
278	50.259	0.187	0.082	3.26	101	1.2	-	3.27	-0.02	79	147	72	67
279	50.442	0.183	0.082	3.26	101	1.1	-	3.27	0.00	79	147	72	67
280	50.628	0.186	0.083	3.27	101	1.2	98	3.26	-0.01	79	147	72	67
281	50.813	0.185	0.082	3.25	101	1.2	-	3.25	-0.01	79	147	71	67
282	50.991	0.178	0.082	3.25	101	1.2	-	3.23	-0.02	79	147	72	67
283	51.175	0.184	0.082	3.24	101	1.1	-	3.23	0.00	79	146	71	67
284	51.365	0.190	0.081	3.27	101	1.2	-	3.22	-0.01	79	145	71	67
285	51.547	0.182	0.083	3.26	101	1.2	-	3.20	-0.02	79	144	71	67
286	51.736	0.189	0.081	3.28	101	1.2	-	3.21	0.01	78	144	71	67
287	51.919	0.183	0.081	3.28	101	1.2	-	3.19	-0.02	78	145	71	67

BOX A TEST DATA - ASTM E2780 / ASTM E2515

Client: HHT
Model: Pioneer III
Run #: 2

Job #: 24-253
Tracking #: 180
Technician: SJB
Date: 2/7/2024

	Particulate Sampling Data							Fuel Weight (lb)		Temperature Data (°F)			
Elapsed Time (min)	Gas Meter (ft^3)	Sample Rate (cfm)	Dilution Tunnel dP (in H_2O)	Orifice dH (in H_2O)	Meter Temp (°F)	Meter Vacuum (in Hg)	Pro. Rate (%)	Scale Reading	Weight Change	Dilution Tunnel	Flue	Filter	Ambient
288	52.102	0.183	0.081	3.28	101	1.2	-	3.17	-0.02	78	145	71	67
289	52.286	0.184	0.081	3.28	101	1.2	-	3.16	-0.01	78	145	71	67
290	52.470	0.184	0.082	3.29	101	1.2	98	3.15	-0.01	78	146	71	67
291	52.656	0.186	0.081	3.28	101	1.2	-	3.15	0.00	78	145	71	67
292	52.841	0.185	0.083	3.30	101	1.2	-	3.14	-0.01	78	144	71	67
293	53.025	0.184	0.082	3.27	101	1.1	-	3.12	-0.02	78	145	71	67
294	53.210	0.185	0.081	3.27	101	1.2	-	3.11	-0.01	78	146	71	67
295	53.391	0.181	0.080	3.29	101	1.1	-	3.09	-0.02	78	147	71	67
296	53.576	0.185	0.080	3.28	101	1.2	-	3.07	-0.02	78	148	71	67
297	53.762	0.186	0.082	3.29	101	1.1	-	3.06	-0.01	78	149	71	67
298	53.946	0.184	0.081	3.29	101	1.1	-	3.04	-0.02	78	147	71	67
299	54.133	0.187	0.083	3.29	101	1.2	-	3.02	-0.02	78	146	71	67
300	54.316	0.183	0.083	3.28	101	1.1	98	3.02	0.00	78	146	71	67
301	54.495	0.179	0.080	3.28	101	1.2	-	3.00	-0.02	78	147	71	67
302	54.683	0.188	0.082	3.28	101	1.2	-	2.99	-0.01	78	147	71	67
303	54.866	0.183	0.082	3.29	101	1.2	-	2.98	-0.01	78	147	71	67
304	55.052	0.186	0.081	3.28	101	1.2	-	2.95	-0.03	78	147	71	67
305	55.235	0.183	0.082	3.29	101	1.2	-	2.95	0.00	78	148	71	67
306	55.418	0.183	0.077	3.30	101	1.2	-	2.94	-0.01	78	148	71	67
307	55.606	0.188	0.081	3.28	101	1.1	-	2.92	-0.02	78	148	71	67
308	55.788	0.182	0.082	3.29	101	1.2	-	2.91	-0.01	78	149	71	67
309	55.971	0.183	0.082	3.28	101	1.2	-	2.88	-0.03	78	150	71	67
310	56.158	0.187	0.081	3.28	101	1.2	98	2.88	0.00	78	151	71	67
311	56.342	0.184	0.082	3.28	101	1.1	-	2.86	-0.02	78	151	71	67
312	56.525	0.183	0.081	3.28	101	1.2	-	2.84	-0.02	78	151	71	67
313	56.713	0.188	0.082	3.28	101	1.2	-	2.84	0.00	78	150	71	67
314	56.891	0.178	0.080	3.29	101	1.1	-	2.82	-0.02	78	152	71	67
315	57.075	0.184	0.082	3.29	101	1.1	-	2.80	-0.02	78	151	71	67
316	57.262	0.187	0.082	3.28	101	1.2	-	2.79	-0.01	78	150	71	67
317	57.445	0.183	0.082	3.28	101	1.2	-	2.78	-0.01	78	149	71	67
318	57.634	0.189	0.081	3.27	101	1.2	-	2.76	-0.02	78	150	71	67
319	57.817	0.183	0.082	3.28	101	1.1	-	2.75	-0.01	78	150	71	67

BOX A TEST DATA - ASTM E2780 / ASTM E2515

Client: HHT
Model: Pioneer III
Run #: 2

Job #: 24-253
Tracking #: 180
Technician: SJB
Date: 2/7/2024

	Particulate Sampling Data							Fuel Weight (lb)		Temperature Data (°F)			
Elapsed Time (min)	Gas Meter (ft^3)	Sample Rate (cfm)	Dilution Tunnel dP (in H_2O)	Orifice dH (in H_2O)	Meter Temp (°F)	Meter Vacuum (in Hg)	Pro. Rate (%)	Scale Reading	Weight Change	Dilution Tunnel	Flue	Filter	Ambient
320	58.001	0.184	0.081	3.27	101	1.2	99	2.74	-0.01	78	149	71	67
321	58.184	0.183	0.080	3.29	101	1.1	-	2.72	-0.02	78	150	71	66
322	58.364	0.180	0.083	3.29	101	1.2	-	2.71	-0.01	77	150	71	66
323	58.553	0.189	0.082	3.28	101	1.2	-	2.70	-0.01	77	151	71	66
324	58.738	0.185	0.081	3.29	101	1.2	-	2.68	-0.02	77	151	71	66
325	58.923	0.185	0.080	3.29	101	1.2	-	2.67	-0.01	77	151	71	66
326	59.104	0.181	0.080	3.29	101	1.1	-	2.65	-0.02	77	151	71	66
327	59.288	0.184	0.084	3.30	101	1.2	-	2.64	-0.01	78	151	71	66
328	59.473	0.185	0.079	3.29	101	1.2	-	2.63	-0.01	78	151	71	66
329	59.658	0.185	0.083	3.29	101	1.2	-	2.62	-0.01	78	151	71	66
330	59.843	0.185	0.081	3.31	101	1.2	99	2.59	-0.03	78	151	71	66
331	60.026	0.183	0.079	3.30	101	1.2	-	2.58	-0.01	78	151	70	66
332	60.210	0.184	0.080	3.29	101	1.2	-	2.57	-0.01	78	152	70	66
333	60.395	0.185	0.081	3.30	101	1.1	-	2.56	-0.01	78	152	70	66
334	60.576	0.181	0.079	3.30	101	1.2	-	2.53	-0.03	78	153	70	66
335	60.759	0.183	0.082	3.30	101	1.2	-	2.53	0.00	78	153	70	66
336	60.948	0.189	0.081	3.29	101	1.2	-	2.51	-0.02	78	152	70	66
337	61.134	0.186	0.083	3.30	101	1.1	-	2.49	-0.02	78	151	70	66
338	61.318	0.184	0.078	3.30	101	1.1	-	2.49	0.00	78	152	70	66
339	61.502	0.184	0.083	3.28	101	1.2	-	2.46	-0.03	78	152	70	66
340	61.682	0.180	0.082	3.29	101	1.2	98	2.44	-0.02	78	152	70	66
341	61.867	0.185	0.081	3.30	101	1.1	-	2.44	0.00	78	152	70	66
342	62.051	0.184	0.082	3.30	101	1.1	-	2.42	-0.02	78	152	70	66
343	62.238	0.187	0.082	3.30	101	1.2	-	2.41	-0.01	78	152	70	66
344	62.424	0.186	0.080	3.28	101	1.2	-	2.38	-0.03	78	152	70	66
345	62.608	0.184	0.083	3.30	101	1.1	-	2.38	0.00	78	151	70	66
346	62.789	0.181	0.083	3.30	101	1.2	-	2.36	-0.02	78	152	70	66
347	62.974	0.185	0.077	3.30	101	1.2	-	2.35	-0.01	78	152	70	66
348	63.157	0.183	0.084	3.30	101	1.2	-	2.33	-0.02	78	152	70	66
349	63.342	0.185	0.081	3.30	101	1.2	-	2.32	-0.01	78	153	70	66
350	63.529	0.187	0.081	3.29	101	1.2	99	2.29	-0.03	78	154	70	66
351	63.710	0.181	0.080	3.31	101	1.2	-	2.28	-0.01	78	153	70	66

BOX A TEST DATA - ASTM E2780 / ASTM E2515

Client: HHT
Model: Pioneer III
Run #: 2

Job #: 24-253
Tracking #: 180
Technician: SJB
Date: 2/7/2024

	Particulate Sampling Data							Fuel Weight (lb)		Temperature Data (°F)			
Elapsed Time (min)	Gas Meter (ft^3)	Sample Rate (cfm)	Dilution Tunnel dP (in H_2O)	Orifice dH (in H_2O)	Meter Temp (°F)	Meter Vacuum (in Hg)	Pro. Rate (%)	Scale Reading	Weight Change	Dilution Tunnel	Flue	Filter	Ambient
352	63.896	0.186	0.079	3.29	101	1.2	-	2.26	-0.02	78	154	70	66
353	64.079	0.183	0.080	3.30	101	1.2	-	2.24	-0.02	78	154	70	66
354	64.262	0.183	0.079	3.30	101	1.2	-	2.22	-0.02	78	153	70	66
355	64.448	0.186	0.079	3.29	100	1.2	-	2.21	-0.01	78	153	70	66
356	64.633	0.185	0.075	3.29	101	1.1	-	2.20	-0.01	78	153	70	66
357	64.818	0.185	0.083	3.29	100	1.1	-	2.18	-0.02	78	154	70	66
358	65.002	0.184	0.081	3.29	100	1.2	-	2.16	-0.02	78	154	70	66
359	65.181	0.179	0.081	3.29	100	1.2	-	2.14	-0.02	78	155	70	66
360	65.368	0.187	0.079	3.29	100	1.2	99	2.13	-0.01	78	155	70	66
361	65.554	0.186	0.082	3.29	100	1.1	-	2.12	-0.01	78	155	70	66
362	65.735	0.181	0.081	3.28	100	1.1	-	2.10	-0.02	78	155	70	66
363	65.924	0.189	0.081	3.28	100	1.2	-	2.08	-0.02	78	155	70	66
364	66.108	0.184	0.081	3.29	100	1.1	-	2.06	-0.02	78	155	70	66
365	66.289	0.181	0.082	3.28	100	1.2	-	2.03	-0.03	78	155	70	65
366	66.474	0.185	0.078	3.29	100	1.2	-	2.03	0.00	78	155	70	66
367	66.657	0.183	0.082	3.28	100	1.2	-	2.01	-0.02	78	155	70	66
368	66.843	0.186	0.080	3.28	100	1.1	-	1.99	-0.02	78	154	70	66
369	67.029	0.186	0.079	3.29	100	1.1	-	1.98	-0.01	78	154	70	66
370	67.213	0.184	0.079	3.30	100	1.2	100	1.97	-0.01	78	154	70	66
371	67.397	0.184	0.081	3.29	100	1.2	-	1.94	-0.03	78	155	70	66
372	67.576	0.179	0.080	3.29	100	1.2	-	1.93	-0.01	78	154	70	66
373	67.762	0.186	0.082	3.28	100	1.2	-	1.92	-0.01	78	154	70	66
374	67.945	0.183	0.080	3.29	100	1.2	-	1.91	-0.01	78	153	70	66
375	68.133	0.188	0.081	3.29	100	1.1	-	1.88	-0.03	78	153	70	66
376	68.319	0.186	0.081	3.28	100	1.2	-	1.87	-0.01	78	152	70	66
377	68.503	0.184	0.081	3.29	100	1.2	-	1.85	-0.02	78	153	70	66
378	68.680	0.177	0.080	3.29	100	1.2	-	1.84	-0.01	78	154	70	66
379	68.868	0.188	0.081	3.28	100	1.2	-	1.81	-0.03	78	154	70	66
380	69.050	0.182	0.080	3.28	100	1.2	100	1.80	-0.01	78	154	70	66
381	69.237	0.187	0.083	3.28	100	1.2	-	1.78	-0.02	78	153	70	66
382	69.424	0.187	0.078	3.29	100	1.2	-	1.78	0.00	78	154	70	66
383	69.607	0.183	0.082	3.30	100	1.2	-	1.75	-0.03	78	153	70	66

BOX A TEST DATA - ASTM E2780 / ASTM E2515

Client: HHT
Model: Pioneer III
Run #: 2

Job #: 24-253
Tracking #: 180
Technician: SJB
Date: 2/7/2024

	Particulate Sampling Data							Fuel Weight (lb)		Temperature Data (°F)			
Elapsed Time (min)	Gas Meter (ft^3)	Sample Rate (cfm)	Dilution Tunnel dP (in H_2O)	Orifice dH (in H_2O)	Meter Temp (°F)	Meter Vacuum (in Hg)	Pro. Rate (%)	Scale Reading	Weight Change	Dilution Tunnel	Flue	Filter	Ambient
384	69.786	0.179	0.082	3.28	100	1.1	-	1.73	-0.02	78	152	70	66
385	69.974	0.188	0.079	3.30	100	1.1	-	1.71	-0.02	78	152	70	66
386	70.157	0.183	0.077	3.30	100	1.2	-	1.70	-0.01	78	152	70	66
387	70.343	0.186	0.080	3.29	100	1.2	-	1.69	-0.01	78	152	70	66
388	70.529	0.186	0.078	3.30	100	1.1	-	1.67	-0.02	78	153	70	66
389	70.710	0.181	0.080	3.31	100	1.2	-	1.66	-0.01	78	152	70	66
390	70.897	0.187	0.079	3.29	100	1.2	100	1.64	-0.02	78	151	70	66
391	71.078	0.181	0.081	3.31	100	1.1	-	1.63	-0.01	78	151	70	66
392	71.259	0.181	0.082	3.30	100	1.2	-	1.60	-0.03	78	150	70	66
393	71.448	0.189	0.080	3.29	100	1.2	-	1.59	-0.01	78	150	70	65
394	71.633	0.185	0.078	3.30	100	1.2	-	1.58	-0.01	78	150	70	66
395	71.815	0.182	0.082	3.29	100	1.2	-	1.56	-0.02	78	149	70	66
396	72.003	0.188	0.078	3.29	100	1.2	-	1.54	-0.02	78	149	70	65
397	72.184	0.181	0.079	3.29	100	1.2	-	1.52	-0.02	78	149	70	66
398	72.368	0.184	0.080	3.29	100	1.2	-	1.52	0.00	78	148	70	66
399	72.552	0.184	0.076	3.30	100	1.2	-	1.51	-0.01	78	147	70	66
400	72.737	0.185	0.081	3.31	100	1.2	99	1.50	-0.01	78	147	70	66
401	72.921	0.184	0.078	3.31	100	1.2	-	1.47	-0.03	78	148	70	65
402	73.108	0.187	0.080	3.30	100	1.2	-	1.46	-0.01	78	148	70	65
403	73.291	0.183	0.082	3.29	100	1.2	-	1.43	-0.03	78	149	70	66
404	73.474	0.183	0.080	3.31	100	1.2	-	1.42	-0.01	78	149	70	66
405	73.656	0.182	0.081	3.29	100	1.2	-	1.41	-0.01	78	150	70	66
406	73.843	0.187	0.077	3.30	100	1.1	-	1.39	-0.02	78	149	70	65
407	74.026	0.183	0.081	3.30	100	1.2	-	1.37	-0.02	78	149	70	66
408	74.213	0.187	0.081	3.29	100	1.1	-	1.35	-0.02	78	148	70	65
409	74.394	0.181	0.082	3.30	100	1.1	-	1.33	-0.02	78	148	70	66
410	74.575	0.181	0.079	3.29	100	1.2	99	1.33	0.00	78	148	70	66
411	74.759	0.184	0.080	3.29	100	1.2	-	1.31	-0.02	78	148	70	66
412	74.948	0.189	0.079	3.31	100	1.2	-	1.30	-0.01	78	149	70	65
413	75.129	0.181	0.081	3.30	100	1.1	-	1.27	-0.03	78	150	70	65
414	75.315	0.186	0.078	3.30	100	1.2	-	1.26	-0.01	78	152	70	66
415	75.502	0.187	0.080	3.30	100	1.2	-	1.23	-0.03	78	154	70	65

BOX A TEST DATA - ASTM E2780 / ASTM E2515

Client: HHT
Model: Pioneer III
Run #: 2

Job #: 24-253
Tracking #: 180
Technician: SJB
Date: 2/7/2024

	Particulate Sampling Data							Fuel Weight (lb)		Temperature Data (°F)			
Elapsed Time (min)	Gas Meter (ft^3)	Sample Rate (cfm)	Dilution Tunnel dP (in H_2O)	Orifice dH (in H_2O)	Meter Temp (°F)	Meter Vacuum (in Hg)	Pro. Rate (%)	Scale Reading	Weight Change	Dilution Tunnel	Flue	Filter	Ambient
416	75.681	0.179	0.080	3.30	100	1.2	-	1.20	-0.03	78	154	70	65
417	75.868	0.187	0.077	3.30	100	1.1	-	1.19	-0.01	78	154	70	65
418	76.051	0.183	0.082	3.31	100	1.2	-	1.17	-0.02	78	155	70	65
419	76.234	0.183	0.079	3.30	100	1.2	-	1.15	-0.02	78	156	70	65
420	76.420	0.186	0.082	3.29	100	1.2	99	1.14	-0.01	78	156	70	65
421	76.603	0.183	0.076	3.30	100	1.2	-	1.13	-0.01	78	155	70	65
422	76.787	0.184	0.083	3.30	100	1.2	-	1.09	-0.04	78	156	70	65
423	76.970	0.183	0.081	3.30	100	1.2	-	1.08	-0.01	78	155	70	65
424	77.155	0.185	0.077	3.30	100	1.1	-	1.06	-0.02	78	155	70	65
425	77.342	0.187	0.079	3.30	100	1.2	-	1.04	-0.02	78	154	70	65
426	77.526	0.184	0.080	3.30	100	1.2	-	1.02	-0.02	78	155	70	65
427	77.708	0.182	0.082	3.29	100	1.2	-	1.01	-0.01	78	155	70	65
428	77.893	0.185	0.076	3.30	100	1.1	-	1.00	-0.01	78	155	70	65
429	78.074	0.181	0.081	3.30	100	1.2	-	0.97	-0.03	78	154	70	65
430	78.258	0.184	0.080	3.30	100	1.2	99	0.96	-0.01	78	154	70	65
431	78.444	0.186	0.080	3.31	100	1.1	-	0.94	-0.02	78	153	70	65
432	78.631	0.187	0.077	3.29	100	1.2	-	0.92	-0.02	78	153	70	65
433	78.814	0.183	0.078	3.30	100	1.1	-	0.90	-0.02	78	154	70	65
434	78.998	0.184	0.082	3.31	100	1.2	-	0.88	-0.02	78	154	70	65
435	79.180	0.182	0.080	3.31	100	1.2	-	0.87	-0.01	78	154	70	65
436	79.364	0.184	0.077	3.32	100	1.2	-	0.86	-0.01	78	154	70	65
437	79.547	0.183	0.080	3.31	100	1.2	-	0.84	-0.02	78	154	70	65
438	79.732	0.185	0.079	3.31	100	1.2	-	0.82	-0.02	78	154	70	65
439	79.922	0.190	0.080	3.32	100	1.1	-	0.80	-0.02	78	154	70	65
440	80.105	0.183	0.079	3.32	100	1.1	100	0.78	-0.02	78	155	70	65
441	80.286	0.181	0.077	3.31	100	1.2	-	0.77	-0.01	78	154	70	65
442	80.471	0.185	0.080	3.31	100	1.1	-	0.77	0.00	78	153	70	65
443	80.652	0.181	0.078	3.31	100	1.2	-	0.74	-0.03	78	155	70	65
444	80.838	0.186	0.080	3.32	100	1.2	-	0.73	-0.01	78	154	70	65
445	81.025	0.187	0.080	3.31	100	1.2	-	0.70	-0.03	78	155	70	65
446	81.211	0.186	0.077	3.30	100	1.2	-	0.69	-0.01	78	154	70	65
447	81.396	0.185	0.078	3.31	100	1.2	-	0.68	-0.01	78	155	70	65

BOX A TEST DATA - ASTM E2780 / ASTM E2515

Client: HHT
Model: Pioneer III
Run #: 2

Job #: 24-253
Tracking #: 180
Technician: SJB
Date: 2/7/2024

	Particulate Sampling Data							Fuel Weight (lb)		Temperature Data (°F)			
Elapsed Time (min)	Gas Meter (ft^3)	Sample Rate (cfm)	Dilution Tunnel dP (in H_2O)	Orifice dH (in H_2O)	Meter Temp (°F)	Meter Vacuum (in Hg)	Pro. Rate (%)	Scale Reading	Weight Change	Dilution Tunnel	Flue	Filter	Ambient
448	81.577	0.181	0.082	3.31	100	1.1	-	0.65	-0.03	78	154	70	65
449	81.757	0.180	0.080	3.30	100	1.2	-	0.65	0.00	78	154	70	65
450	81.945	0.188	0.082	3.30	100	1.2	99	0.63	-0.02	78	152	70	65
451	82.130	0.185	0.080	3.30	100	1.2	-	0.63	0.00	78	149	70	65
452	82.313	0.183	0.082	3.30	100	1.1	-	0.61	-0.02	78	149	70	65
453	82.499	0.186	0.079	3.31	100	1.2	-	0.59	-0.02	78	150	70	65
454	82.683	0.184	0.078	3.30	100	1.1	-	0.57	-0.02	78	152	70	65
455	82.863	0.180	0.079	3.29	100	1.2	-	0.57	0.00	78	155	70	65
456	83.046	0.183	0.080	3.31	100	1.2	-	0.55	-0.02	78	155	70	65
457	83.232	0.186	0.079	3.31	100	1.2	-	0.54	-0.01	78	154	70	65
458	83.420	0.188	0.078	3.30	100	1.2	-	0.51	-0.03	78	153	70	65
459	83.602	0.182	0.081	3.31	100	1.2	-	0.50	-0.01	78	152	70	65
460	83.789	0.187	0.079	3.30	100	1.2	99	0.48	-0.02	78	152	70	65
461	83.970	0.181	0.079	3.31	100	1.1	-	0.46	-0.02	78	151	70	65
462	84.155	0.185	0.080	3.31	100	1.1	-	0.46	0.00	78	148	70	65
463	84.337	0.182	0.080	3.31	100	1.2	-	0.45	-0.01	78	147	70	65
464	84.525	0.188	0.077	3.31	100	1.2	-	0.43	-0.02	78	145	70	65
465	84.711	0.186	0.081	3.31	100	1.2	-	0.42	-0.01	78	144	70	65
466	84.894	0.183	0.080	3.31	100	1.2	-	0.41	-0.01	78	145	70	65
467	85.076	0.182	0.080	3.30	100	1.2	-	0.39	-0.02	78	148	70	65
468	85.260	0.184	0.077	3.30	100	1.1	-	0.37	-0.02	78	149	70	65
469	85.443	0.183	0.079	3.31	100	1.2	-	0.36	-0.01	78	149	70	65
470	85.630	0.187	0.080	3.30	100	1.1	100	0.34	-0.02	78	149	70	65
471	85.816	0.186	0.079	3.31	100	1.2	-	0.32	-0.02	78	151	70	65
472	85.999	0.183	0.082	3.30	100	1.2	-	0.30	-0.02	78	152	70	65
473	86.183	0.184	0.081	3.30	100	1.2	-	0.28	-0.02	78	153	70	65
474	86.365	0.182	0.079	3.30	100	1.2	-	0.27	-0.01	78	153	70	65
475	86.548	0.183	0.080	3.30	100	1.2	-	0.25	-0.02	78	153	70	65
476	86.734	0.186	0.080	3.30	100	1.1	-	0.23	-0.02	78	152	70	65
477	86.919	0.185	0.083	3.30	100	1.2	-	0.23	0.00	78	152	70	65
478	87.104	0.185	0.080	3.30	100	1.2	-	0.21	-0.02	78	152	70	65
479	87.288	0.184	0.080	3.31	100	1.1	-	0.18	-0.03	78	152	70	65

BOX A TEST DATA - ASTM E2780 / ASTM E2515

Client: HHT
Model: Pioneer III
Run #: 2

Job #: 24-253
Tracking #: 180
Technician: SJB
Date: 2/7/2024

	Particulate Sampling Data							Fuel Weight (lb)		Temperature Data (°F)			
Elapsed Time (min)	Gas Meter (ft^3)	Sample Rate (cfm)	Dilution Tunnel dP (in H_2O)	Orifice dH (in H_2O)	Meter Temp (°F)	Meter Vacuum (in Hg)	Pro. Rate (%)	Scale Reading	Weight Change	Dilution Tunnel	Flue	Filter	Ambient
480	87.470	0.182	0.081	3.31	100	1.2	99	0.17	-0.01	78	153	70	65
481	87.653	0.183	0.077	3.30	100	1.1	-	0.16	-0.01	78	152	70	65
482	87.839	0.186	0.079	3.30	100	1.2	-	0.14	-0.02	78	153	70	65
483	88.020	0.181	0.079	3.31	100	1.2	-	0.13	-0.01	78	153	70	65
484	88.209	0.189	0.080	3.31	100	1.2	-	0.11	-0.02	78	154	70	65
485	88.393	0.184	0.077	3.31	100	1.2	-	0.09	-0.02	79	153	70	65
486	88.575	0.182	0.083	3.31	100	1.1	-	0.07	-0.02	78	154	70	65
487	88.758	0.183	0.081	3.30	100	1.2	-	0.06	-0.01	78	154	70	65
488	88.939	0.181	0.081	3.30	100	1.2	-	0.04	-0.02	78	155	70	65
489	89.128	0.189	0.078	3.30	100	1.1	-	0.03	-0.01	78	155	70	65
490	89.314	0.186	0.081	3.30	100	1.2	99	0.02	-0.01	78	155	70	65
491	89.497	0.183	0.077	3.31	100	1.2	-	0.01	-0.01	79	155	70	65
492	89.681	0.184	0.077	3.30	100	1.2	101	0.00	-0.01	79	153	70	65
Avg/Tot	89.681	0.182	0.081	3.23	98.1	1.2	100			95.8	261.7	74.5	67.5

BOX B TEST DATA - ASTM E2780 / ASTM E2515

Client: HHT
Model: Pioneer III
Run #: 2

Job #: 24-253
Tracking #: 180
Technician: SJB
Date: 2/7/2024

	Particulate Sampling Data							Flue Gas Data		
Elapsed Time (min)	Gas Meter (ft^3)	Sample Rate (cfm)	Orifice dH (in H_2O)	Meter Temp (°F)	Meter Vacuum (in Hg)	Pro. Rate (%)	Filter (°F)	Flue Draft (in H_2O)	CO_2 (%)	CO (%)
0	0.000		0.01	74	0.6		64	-0.048	2.07	0.147
1	0.147	0.147	3.16	74	2.0	-	74	-0.070	1.70	0.182
2	0.323	0.176	3.14	74	2.0	-	89	-0.093	5.12	0.144
3	0.495	0.172	3.14	74	2.0	-	87	-0.072	10.44	0.734
4	0.667	0.172	3.11	74	2.0	-	87	-0.087	5.22	0.504
5	0.841	0.174	3.13	74	2.2	-	88	-0.096	14.22	0.715
6	1.015	0.174	3.11	74	2.1	-	88	-0.080	11.72	1.068
7	1.187	0.172	3.11	74	2.0	-	85	-0.079	10.69	0.705
8	1.359	0.172	3.10	74	2.2	-	85	-0.078	10.00	0.638
9	1.530	0.171	3.11	75	1.9	-	84	-0.077	9.07	0.790
10	1.705	0.175	3.10	75	2.0	103	84	-0.077	9.40	0.641
11	1.877	0.172	3.11	75	2.1	-	84	-0.078	9.60	0.615
12	2.052	0.175	3.11	75	2.0	-	84	-0.078	9.60	0.612
13	2.227	0.175	3.11	76	1.9	-	83	-0.073	9.99	0.475
14	2.402	0.175	3.11	76	1.8	-	83	-0.076	10.33	0.363
15	2.571	0.169	3.12	76	1.8	-	83	-0.075	10.01	0.267
16	2.747	0.176	3.12	76	2.2	-	83	-0.071	8.17	0.795
17	2.922	0.175	3.13	77	2.0	-	83	-0.066	6.84	1.159
18	3.098	0.176	3.12	77	2.2	-	82	-0.066	6.77	1.215
19	3.272	0.174	3.13	77	1.8	-	82	-0.071	8.57	0.913
20	3.444	0.172	3.14	78	2.1	105	82	-0.074	9.72	0.515
21	3.620	0.176	3.14	78	2.0	-	83	-0.074	10.52	0.280
22	3.796	0.176	3.14	78	2.2	-	83	-0.075	10.56	0.209
23	3.971	0.175	3.15	79	1.8	-	83	-0.074	10.43	0.184
24	4.143	0.172	3.14	79	2.2	-	83	-0.074	9.90	0.238
25	4.318	0.175	3.14	79	2.2	-	83	-0.073	9.61	0.352
26	4.495	0.177	3.14	80	1.7	-	83	-0.074	9.66	0.340
27	4.671	0.176	3.14	80	1.9	-	82	-0.072	9.70	0.364
28	4.845	0.174	3.14	80	2.0	-	82	-0.073	9.61	0.423
29	5.020	0.175	3.15	81	1.8	-	82	-0.070	9.62	0.372
30	5.198	0.178	3.15	81	2.2	103	82	-0.072	9.53	0.437
31	5.375	0.177	3.16	81	1.9	-	82	-0.071	9.34	0.603

BOX B TEST DATA - ASTM E2780 / ASTM E2515

Client: HHT
Model: Pioneer III
Run #: 2

Job #: 24-253
Tracking #: 180
Technician: SJB
Date: 2/7/2024

	Particulate Sampling Data							Flue Gas Data		
Elapsed Time (min)	Gas Meter (ft^3)	Sample Rate (cfm)	Orifice dH (in H_2O)	Meter Temp (°F)	Meter Vacuum (in Hg)	Pro. Rate (%)	Filter (°F)	Flue Draft (in H_2O)	CO_2 (%)	CO (%)
32	5.550	0.175	3.16	82	2.2	-	82	-0.069	8.79	0.896
33	5.725	0.175	3.17	82	2.0	-	82	-0.070	9.09	0.723
34	5.902	0.177	3.17	82	1.7	-	82	-0.071	9.17	0.694
35	6.079	0.177	3.16	83	1.7	-	82	-0.071	9.15	0.762
36	6.256	0.177	3.16	83	1.8	-	82	-0.070	9.55	0.636
37	6.431	0.175	3.16	83	1.7	-	82	-0.071	10.27	0.349
38	6.607	0.176	3.17	84	2.3	-	82	-0.073	10.23	0.393
39	6.786	0.179	3.17	84	2.1	-	82	-0.071	10.25	0.362
40	6.964	0.178	3.17	84	2.0	104	82	-0.073	10.11	0.406
41	7.141	0.177	3.18	85	2.0	-	82	-0.073	10.16	0.395
42	7.315	0.174	3.17	85	1.7	-	82	-0.071	10.09	0.446
43	7.493	0.178	3.18	85	2.2	-	82	-0.073	10.26	0.358
44	7.671	0.178	3.17	86	2.2	-	82	-0.071	10.31	0.406
45	7.846	0.175	3.17	86	2.2	-	82	-0.070	10.25	0.408
46	8.027	0.181	3.18	86	2.3	-	83	-0.071	10.30	0.380
47	8.203	0.176	3.18	87	1.9	-	83	-0.073	10.34	0.351
48	8.379	0.176	3.19	87	2.1	-	83	-0.071	10.10	0.470
49	8.557	0.178	3.18	87	2.1	-	83	-0.070	9.98	0.456
50	8.737	0.180	3.18	87	1.8	103	83	-0.069	10.16	0.424
51	8.915	0.178	3.19	88	2.2	-	83	-0.071	10.26	0.416
52	9.092	0.177	3.19	88	1.9	-	83	-0.070	10.43	0.343
53	9.271	0.179	3.19	88	1.8	-	83	-0.070	10.56	0.304
54	9.450	0.179	3.18	88	1.7	-	83	-0.071	10.67	0.261
55	9.628	0.178	3.19	89	2.1	-	83	-0.069	10.76	0.254
56	9.801	0.173	3.18	89	1.8	-	83	-0.070	10.91	0.213
57	9.983	0.182	3.19	89	2.2	-	83	-0.072	10.99	0.187
58	10.163	0.180	3.20	89	2.2	-	83	-0.072	10.89	0.152
59	10.342	0.179	3.19	90	1.8	-	83	-0.070	10.90	0.153
60	10.521	0.179	3.19	90	2.3	102	83	-0.070	10.76	0.146
61	10.698	0.177	3.20	90	2.1	-	83	-0.070	10.77	0.214
62	10.876	0.178	3.21	90	2.2	-	82	-0.070	10.42	0.347
63	11.056	0.180	3.21	90	2.2	-	81	-0.067	10.55	0.256

BOX B TEST DATA - ASTM E2780 / ASTM E2515

Client: HHT
Model: Pioneer III
Run #: 2

Job #: 24-253
Tracking #: 180
Technician: SJB
Date: 2/7/2024

	Particulate Sampling Data							Flue Gas Data		
Elapsed Time (min)	Gas Meter (ft^3)	Sample Rate (cfm)	Orifice dH (in H_2O)	Meter Temp (°F)	Meter Vacuum (in Hg)	Pro. Rate (%)	Filter (°F)	Flue Draft (in H_2O)	CO_2 (%)	CO (%)
64	11.236	0.180	3.21	91	1.7	-	81	-0.068	10.65	0.320
65	11.415	0.179	3.20	91	2.0	-	81	-0.066	10.35	0.439
66	11.590	0.175	3.21	91	2.1	-	81	-0.069	10.44	0.416
67	11.772	0.182	3.22	91	2.1	-	81	-0.065	10.10	0.572
68	11.951	0.179	3.21	92	2.1	-	81	-0.067	10.12	0.538
69	12.129	0.178	3.22	92	1.7	-	81	-0.067	10.19	0.465
70	12.312	0.183	3.22	92	2.2	102	81	-0.069	10.20	0.484
71	12.491	0.179	3.22	92	1.8	-	81	-0.064	10.29	0.419
72	12.669	0.178	3.22	92	2.2	-	81	-0.065	10.21	0.477
73	12.846	0.177	3.23	92	2.2	-	81	-0.067	10.26	0.490
74	13.026	0.180	3.22	93	2.0	-	81	-0.066	10.37	0.419
75	13.211	0.185	3.22	93	2.1	-	81	-0.065	10.41	0.382
76	13.390	0.179	3.23	93	2.1	-	81	-0.067	10.49	0.347
77	13.568	0.178	3.22	93	2.2	-	81	-0.065	10.50	0.349
78	13.748	0.180	3.22	93	1.9	-	81	-0.064	10.38	0.315
79	13.929	0.181	3.22	93	1.7	-	81	-0.065	10.33	0.337
80	14.109	0.180	3.22	94	1.7	102	81	-0.065	10.42	0.305
81	14.289	0.180	3.21	94	2.2	-	81	-0.066	10.44	0.314
82	14.469	0.180	3.22	94	2.2	-	81	-0.067	10.53	0.232
83	14.648	0.179	3.22	94	2.2	-	81	-0.064	10.75	0.221
84	14.827	0.179	3.22	94	2.0	-	81	-0.068	10.81	0.194
85	15.008	0.181	3.22	94	2.0	-	81	-0.069	10.72	0.168
86	15.190	0.182	3.23	94	2.1	-	81	-0.068	10.73	0.173
87	15.370	0.180	3.22	95	1.9	-	81	-0.066	10.58	0.165
88	15.548	0.178	3.23	95	1.7	-	81	-0.067	10.48	0.204
89	15.727	0.179	3.23	95	2.2	-	81	-0.066	10.48	0.203
90	15.909	0.182	3.23	95	2.0	102	81	-0.069	10.58	0.176
91	16.090	0.181	3.23	95	1.9	-	81	-0.069	10.64	0.135
92	16.270	0.180	3.23	95	2.2	-	81	-0.067	10.81	0.110
93	16.450	0.180	3.23	95	2.1	-	81	-0.068	10.96	0.106
94	16.629	0.179	3.23	95	2.2	-	81	-0.067	10.88	0.114
95	16.809	0.180	3.23	95	2.2	-	81	-0.067	10.79	0.112

BOX B TEST DATA - ASTM E2780 / ASTM E2515

Client: HHT
Model: Pioneer III
Run #: 2

Job #: 24-253
Tracking #: 180
Technician: SJB
Date: 2/7/2024

	Particulate Sampling Data							Flue Gas Data		
Elapsed Time (min)	Gas Meter (ft^3)	Sample Rate (cfm)	Orifice dH (in H_2O)	Meter Temp (°F)	Meter Vacuum (in Hg)	Pro. Rate (%)	Filter (°F)	Flue Draft (in H_2O)	CO_2 (%)	CO (%)
96	16.988	0.179	3.23	95	2.2	-	81	-0.065	10.80	0.105
97	17.173	0.185	3.23	96	2.1	-	81	-0.066	10.84	0.116
98	17.349	0.176	3.23	96	2.0	-	81	-0.068	10.74	0.199
99	17.531	0.182	3.23	96	1.9	-	81	-0.064	10.57	0.189
100	17.708	0.177	3.23	96	2.1	101	81	-0.065	10.65	0.211
101	17.894	0.186	3.23	96	2.0	-	81	-0.066	10.68	0.196
102	18.075	0.181	3.23	96	1.9	-	81	-0.064	10.73	0.206
103	18.255	0.180	3.24	96	2.0	-	82	-0.064	10.62	0.216
104	18.436	0.181	3.23	96	2.0	-	81	-0.067	10.55	0.229
105	18.612	0.176	3.23	96	2.1	-	81	-0.064	10.49	0.237
106	18.793	0.181	3.23	97	1.7	-	82	-0.064	10.48	0.196
107	18.978	0.185	3.23	97	2.2	-	82	-0.064	10.36	0.199
108	19.160	0.182	3.23	97	1.8	-	82	-0.063	10.41	0.193
109	19.340	0.180	3.23	97	1.7	-	82	-0.065	10.41	0.218
110	19.519	0.179	3.24	97	2.1	102	82	-0.065	10.47	0.197
111	19.700	0.181	3.24	97	2.2	-	82	-0.065	10.41	0.198
112	19.879	0.179	3.24	97	2.2	-	82	-0.065	10.54	0.177
113	20.061	0.182	3.24	97	2.2	-	82	-0.066	10.58	0.187
114	20.246	0.185	3.24	97	2.0	-	82	-0.065	10.62	0.181
115	20.426	0.180	3.24	97	2.2	-	82	-0.067	10.64	0.196
116	20.601	0.175	3.24	97	1.8	-	82	-0.067	10.74	0.200
117	20.786	0.185	3.23	97	1.7	-	82	-0.066	10.80	0.197
118	20.965	0.179	3.24	98	1.9	-	82	-0.068	10.89	0.188
119	21.150	0.185	3.24	98	1.9	-	82	-0.067	10.98	0.189
120	21.331	0.181	3.24	98	2.0	102	82	-0.067	11.02	0.204
121	21.512	0.181	3.24	98	1.8	-	82	-0.066	11.07	0.178
122	21.691	0.179	3.25	98	2.2	-	82	-0.065	11.11	0.198
123	21.872	0.181	3.24	98	2.2	-	82	-0.065	10.92	0.218
124	22.055	0.183	3.24	98	1.8	-	82	-0.065	10.70	0.236
125	22.238	0.183	3.25	98	2.1	-	82	-0.065	10.63	0.254
126	22.416	0.178	3.25	98	1.7	-	82	-0.062	10.38	0.232
127	22.600	0.184	3.25	98	1.8	-	82	-0.064	10.10	0.250

BOX B TEST DATA - ASTM E2780 / ASTM E2515

Client: HHT
Model: Pioneer III
Run #: 2

Job #: 24-253
Tracking #: 180
Technician: SJB
Date: 2/7/2024

	Particulate Sampling Data							Flue Gas Data		
Elapsed Time (min)	Gas Meter (ft^3)	Sample Rate (cfm)	Orifice dH (in H_2O)	Meter Temp (°F)	Meter Vacuum (in Hg)	Pro. Rate (%)	Filter (°F)	Flue Draft (in H_2O)	CO_2 (%)	CO (%)
128	22.780	0.180	3.25	98	1.7	-	82	-0.063	10.02	0.223
129	22.961	0.181	3.25	98	2.1	-	82	-0.062	9.80	0.204
130	23.144	0.183	3.24	98	2.2	101	82	-0.065	9.86	0.216
131	23.324	0.180	3.24	98	2.1	-	82	-0.065	10.24	0.380
132	23.504	0.180	3.24	98	1.9	-	81	-0.064	10.32	0.333
133	23.688	0.184	3.25	98	2.0	-	82	-0.067	10.25	0.328
134	23.869	0.181	3.25	98	2.1	-	82	-0.065	10.26	0.307
135	24.050	0.181	3.25	98	2.0	-	82	-0.066	10.16	0.304
136	24.232	0.182	3.25	98	2.1	-	82	-0.064	10.00	0.252
137	24.415	0.183	3.25	99	1.9	-	82	-0.064	9.80	0.273
138	24.596	0.181	3.26	99	2.1	-	82	-0.062	9.56	0.285
139	24.776	0.180	3.25	99	1.9	-	81	-0.063	8.83	0.582
140	24.957	0.181	3.24	99	1.7	102	81	-0.059	8.57	0.597
141	25.138	0.181	3.25	99	1.8	-	81	-0.061	8.47	0.614
142	25.321	0.183	3.25	99	1.7	-	81	-0.058	8.33	0.630
143	25.504	0.183	3.25	99	1.7	-	81	-0.058	8.21	0.664
144	25.684	0.180	3.25	99	2.2	-	81	-0.058	8.12	0.708
145	25.864	0.180	3.25	99	1.8	-	81	-0.057	7.88	0.776
146	26.046	0.182	3.25	99	2.0	-	81	-0.055	7.70	0.829
147	26.228	0.182	3.25	99	1.8	-	81	-0.056	7.44	0.922
148	26.410	0.182	3.25	99	2.2	-	81	-0.055	7.45	0.958
149	26.593	0.183	3.25	99	2.2	-	81	-0.053	7.34	0.888
150	26.774	0.181	3.25	99	2.2	102	81	-0.052	7.36	0.953
151	26.954	0.180	3.25	99	1.7	-	81	-0.054	7.25	0.969
152	27.136	0.182	3.24	99	2.0	-	81	-0.050	7.34	1.017
153	27.318	0.182	3.25	99	1.8	-	80	-0.043	6.65	0.923
154	27.501	0.183	3.25	99	2.1	-	80	-0.042	6.83	1.139
155	27.684	0.183	3.25	99	1.7	-	80	-0.043	6.60	1.157
156	27.865	0.181	3.25	99	1.8	-	79	-0.040	6.53	1.189
157	28.045	0.180	3.25	99	2.1	-	79	-0.041	6.44	1.187
158	28.225	0.180	3.25	99	2.2	-	79	-0.038	6.34	1.229
159	28.409	0.184	3.25	99	1.9	-	79	-0.040	6.35	1.298

BOX B TEST DATA - ASTM E2780 / ASTM E2515

Client: HHT
Model: Pioneer III
Run #: 2

Job #: 24-253
Tracking #: 180
Technician: SJB
Date: 2/7/2024

	Particulate Sampling Data							Flue Gas Data		
Elapsed Time (min)	Gas Meter (ft^3)	Sample Rate (cfm)	Orifice dH (in H_2O)	Meter Temp (°F)	Meter Vacuum (in Hg)	Pro. Rate (%)	Filter (°F)	Flue Draft (in H_2O)	CO_2 (%)	CO (%)
160	28.592	0.183	3.26	99	1.8	100	79	-0.037	6.28	1.361
161	28.776	0.184	3.25	99	1.7	-	79	-0.036	6.18	1.424
162	28.954	0.178	3.26	99	1.9	-	78	-0.037	6.10	1.467
163	29.138	0.184	3.25	99	2.2	-	78	-0.037	6.03	1.530
164	29.320	0.182	3.26	99	2.1	-	78	-0.036	6.03	1.615
165	29.502	0.182	3.26	99	2.2	-	78	-0.036	5.91	1.672
166	29.685	0.183	3.26	99	1.9	-	78	-0.035	5.97	1.750
167	29.865	0.180	3.25	99	2.1	-	78	-0.033	5.93	1.745
168	30.046	0.181	3.26	100	1.8	-	78	-0.031	5.88	1.800
169	30.231	0.185	3.26	100	2.1	-	78	-0.032	5.85	1.853
170	30.413	0.182	3.26	99	2.1	99	78	-0.033	5.68	1.928
171	30.594	0.181	3.27	99	2.1	-	77	-0.032	5.58	1.974
172	30.778	0.184	3.27	100	1.7	-	77	-0.029	5.66	2.094
173	30.961	0.183	3.27	100	2.1	-	77	-0.032	5.64	2.070
174	31.143	0.182	3.26	99	2.2	-	77	-0.031	5.57	2.079
175	31.325	0.182	3.26	100	1.7	-	77	-0.031	5.49	2.163
176	31.505	0.180	3.26	100	1.7	-	77	-0.028	5.51	2.172
177	31.688	0.183	3.26	100	1.9	-	77	-0.032	5.56	2.236
178	31.872	0.184	3.26	100	2.2	-	77	-0.028	5.71	1.952
179	32.054	0.182	3.27	99	1.7	-	76	-0.027	5.84	1.870
180	32.237	0.183	3.27	99	1.7	100	76	-0.027	5.79	1.866
181	32.419	0.182	3.26	99	1.8	-	76	-0.027	5.79	1.902
182	32.600	0.181	3.26	99	2.2	-	76	-0.027	5.79	1.909
183	32.782	0.182	3.26	99	2.2	-	76	-0.026	5.88	1.927
184	32.963	0.181	3.27	99	2.0	-	76	-0.029	5.81	1.919
185	33.148	0.185	3.27	99	2.2	-	76	-0.029	5.86	1.913
186	33.332	0.184	3.27	99	1.7	-	76	-0.028	5.58	2.040
187	33.514	0.182	3.27	99	2.2	-	76	-0.028	5.46	2.121
188	33.694	0.180	3.26	100	2.0	-	76	-0.027	5.42	2.143
189	33.877	0.183	3.27	100	1.9	-	75	-0.027	5.45	2.156
190	34.057	0.180	3.27	100	1.9	98	75	-0.028	5.42	2.145
191	34.242	0.185	3.27	100	1.8	-	75	-0.026	5.43	2.116

BOX B TEST DATA - ASTM E2780 / ASTM E2515

Client: HHT
Model: Pioneer III
Run #: 2

Job #: 24-253
Tracking #: 180
Technician: SJB
Date: 2/7/2024

	Particulate Sampling Data							Flue Gas Data		
Elapsed Time (min)	Gas Meter (ft^3)	Sample Rate (cfm)	Orifice dH (in H_2O)	Meter Temp (°F)	Meter Vacuum (in Hg)	Pro. Rate (%)	Filter (°F)	Flue Draft (in H_2O)	CO_2 (%)	CO (%)
192	34.426	0.184	3.26	100	2.2	-	75	-0.029	5.51	2.117
193	34.608	0.182	3.27	99	2.2	-	75	-0.026	5.46	2.068
194	34.789	0.181	3.27	99	1.9	-	75	-0.026	5.60	2.093
195	34.972	0.183	3.27	100	2.2	-	75	-0.025	5.55	2.055
196	35.154	0.182	3.27	100	1.7	-	75	-0.026	5.55	2.027
197	35.337	0.183	3.26	100	1.7	-	75	-0.024	5.67	2.032
198	35.521	0.184	3.26	100	2.0	-	75	-0.028	5.60	2.005
199	35.702	0.181	3.26	99	1.8	-	75	-0.025	5.51	1.954
200	35.881	0.179	3.27	99	1.8	97	75	-0.023	5.68	1.984
201	36.066	0.185	3.27	100	1.7	-	75	-0.025	5.56	1.949
202	36.248	0.182	3.27	100	2.1	-	75	-0.023	5.48	1.915
203	36.432	0.184	3.26	100	2.1	-	75	-0.026	5.56	1.949
204	36.612	0.180	3.28	100	2.0	-	75	-0.024	5.45	1.998
205	36.794	0.182	3.27	100	1.7	-	74	-0.024	5.41	2.082
206	36.981	0.187	3.27	99	2.2	-	74	-0.023	5.45	2.130
207	37.161	0.180	3.28	100	1.7	-	74	-0.026	5.42	2.127
208	37.343	0.182	3.27	100	1.9	-	74	-0.020	5.48	2.153
209	37.527	0.184	3.28	100	2.0	-	74	-0.023	5.47	2.142
210	37.707	0.180	3.27	100	2.1	103	74	-0.027	5.52	2.161
211	37.894	0.187	3.28	100	2.2	-	74	-0.026	5.55	2.177
212	38.075	0.181	3.27	100	2.2	-	74	-0.027	5.49	2.155
213	38.256	0.181	3.27	100	2.2	-	74	-0.024	5.47	2.152
214	38.439	0.183	3.27	100	2.2	-	73	-0.022	5.48	2.159
215	38.622	0.183	3.28	100	1.8	-	73	-0.024	5.54	2.192
216	38.806	0.184	3.28	100	2.2	-	73	-0.026	5.63	2.144
217	38.990	0.184	3.28	100	2.0	-	72	-0.025	5.58	2.115
218	39.171	0.181	3.28	100	1.8	-	72	-0.025	5.52	2.092
219	39.354	0.183	3.28	100	1.8	-	72	-0.025	5.64	2.145
220	39.535	0.181	3.29	100	2.2	104	72	-0.025	5.68	2.148
221	39.717	0.182	3.27	99	2.2	-	72	-0.025	5.64	2.126
222	39.901	0.184	3.28	99	1.9	-	72	-0.023	5.66	2.136
223	40.084	0.183	3.28	99	1.7	-	71	-0.024	5.58	2.099

BOX B TEST DATA - ASTM E2780 / ASTM E2515

Client: HHT
Model: Pioneer III
Run #: 2

Job #: 24-253
Tracking #: 180
Technician: SJB
Date: 2/7/2024

	Particulate Sampling Data							Flue Gas Data		
Elapsed Time (min)	Gas Meter (ft^3)	Sample Rate (cfm)	Orifice dH (in H_2O)	Meter Temp (°F)	Meter Vacuum (in Hg)	Pro. Rate (%)	Filter (°F)	Flue Draft (in H_2O)	CO_2 (%)	CO (%)
224	40.268	0.184	3.28	99	1.7	-	71	-0.021	5.65	2.141
225	40.451	0.183	3.28	99	2.2	-	71	-0.024	5.72	2.187
226	40.627	0.176	3.28	99	2.2	-	71	-0.022	5.70	2.227
227	40.810	0.183	3.28	99	1.7	-	71	-0.023	5.65	2.234
228	40.997	0.187	3.28	99	2.0	-	71	-0.023	5.55	2.223
229	41.179	0.182	3.28	99	1.9	-	71	-0.022	5.49	2.237
230	41.360	0.181	3.27	98	1.9	98	71	-0.025	5.43	2.219
231	41.545	0.185	3.29	98	2.2	-	71	-0.025	5.56	2.273
232	41.725	0.180	3.27	98	2.1	-	71	-0.022	5.28	2.293
233	41.905	0.180	3.28	98	2.1	-	71	-0.021	5.35	2.394
234	42.090	0.185	3.27	98	2.0	-	71	-0.023	5.26	2.376
235	42.273	0.183	3.28	98	1.9	-	71	-0.024	5.25	2.318
236	42.457	0.184	3.27	98	2.1	-	71	-0.024	5.23	2.269
237	42.639	0.182	3.28	98	1.7	-	71	-0.022	5.31	2.288
238	42.820	0.181	3.27	98	2.2	-	71	-0.022	5.39	2.293
239	43.003	0.183	3.28	98	2.0	-	71	-0.023	5.39	2.269
240	43.184	0.181	3.28	98	1.7	97	71	-0.022	5.39	2.253
241	43.368	0.184	3.28	98	2.0	-	71	-0.021	5.42	2.247
242	43.551	0.183	3.29	98	2.1	-	71	-0.020	5.43	2.225
243	43.733	0.182	3.28	98	2.1	-	71	-0.022	5.49	2.237
244	43.915	0.182	3.28	98	2.2	-	71	-0.024	5.41	2.202
245	44.096	0.181	3.28	98	2.2	-	71	-0.022	5.40	2.152
246	44.278	0.182	3.27	98	1.8	-	71	-0.023	5.57	2.199
247	44.459	0.181	3.27	98	2.0	-	71	-0.022	5.50	2.163
248	44.644	0.185	3.28	98	1.9	-	71	-0.023	5.35	2.144
249	44.824	0.180	3.28	98	2.2	-	71	-0.021	5.41	2.197
250	45.009	0.185	3.27	98	2.0	97	71	-0.020	5.41	2.187
251	45.190	0.181	3.28	98	1.7	-	71	-0.024	5.35	2.185
252	45.372	0.182	3.27	98	2.0	-	71	-0.023	5.38	2.195
253	45.556	0.184	3.28	98	1.9	-	71	-0.021	5.33	2.193
254	45.738	0.182	3.28	98	2.1	-	71	-0.023	5.37	2.159
255	45.921	0.183	3.28	98	2.2	-	71	-0.021	5.42	2.144

BOX B TEST DATA - ASTM E2780 / ASTM E2515

Client: HHT
Model: Pioneer III
Run #: 2

Job #: 24-253
Tracking #: 180
Technician: SJB
Date: 2/7/2024

	Particulate Sampling Data							Flue Gas Data		
Elapsed Time (min)	Gas Meter (ft^3)	Sample Rate (cfm)	Orifice dH (in H_2O)	Meter Temp (°F)	Meter Vacuum (in Hg)	Pro. Rate (%)	Filter (°F)	Flue Draft (in H_2O)	CO_2 (%)	CO (%)
256	46.100	0.179	3.27	98	1.6	-	71	-0.023	5.35	2.098
257	46.283	0.183	3.28	98	1.7	-	71	-0.022	5.37	2.077
258	46.466	0.183	3.27	98	1.7	-	71	-0.024	5.43	2.083
259	46.649	0.183	3.28	98	1.8	-	71	-0.020	5.35	2.047
260	46.831	0.182	3.27	98	1.9	97	71	-0.023	5.44	2.075
261	47.015	0.184	3.27	98	1.9	-	71	-0.023	5.45	2.084
262	47.194	0.179	3.28	98	1.7	-	71	-0.019	5.49	2.067
263	47.377	0.183	3.28	98	1.7	-	71	-0.024	5.33	1.995
264	47.560	0.183	3.27	98	1.7	-	71	-0.020	5.38	2.021
265	47.742	0.182	3.28	98	2.0	-	71	-0.020	5.27	1.990
266	47.922	0.180	3.27	98	2.2	-	71	-0.021	5.27	1.976
267	48.110	0.188	3.28	98	1.7	-	71	-0.019	5.23	1.962
268	48.291	0.181	3.28	98	2.2	-	71	-0.023	5.15	1.958
269	48.468	0.177	3.28	98	2.0	-	71	-0.021	5.09	1.924
270	48.654	0.186	3.28	98	1.7	98	71	-0.022	5.04	1.914
271	48.836	0.182	3.28	98	1.7	-	71	-0.019	5.10	1.955
272	49.020	0.184	3.27	98	1.7	-	71	-0.022	5.04	1.942
273	49.203	0.183	3.28	98	2.2	-	71	-0.020	5.04	1.961
274	49.382	0.179	3.28	98	1.9	-	71	-0.020	5.12	2.003
275	49.563	0.181	3.28	98	1.8	-	71	-0.020	5.18	2.033
276	49.747	0.184	3.27	98	2.1	-	71	-0.020	5.05	2.014
277	49.929	0.182	3.27	98	2.2	-	71	-0.019	5.05	2.104
278	50.113	0.184	3.27	98	1.7	-	71	-0.021	5.01	2.112
279	50.293	0.180	3.28	98	2.0	-	71	-0.020	4.97	2.100
280	50.478	0.185	3.28	98	2.0	98	71	-0.022	5.05	2.138
281	50.661	0.183	3.28	98	1.7	-	71	-0.022	5.07	2.152
282	50.838	0.177	3.28	98	2.1	-	71	-0.017	4.96	2.116
283	51.020	0.182	3.28	98	2.1	-	71	-0.020	4.92	2.094
284	51.207	0.187	3.27	98	2.0	-	71	-0.019	4.98	2.099
285	51.386	0.179	3.27	98	1.7	-	71	-0.019	4.92	2.059
286	51.573	0.187	3.27	98	1.7	-	71	-0.020	4.92	2.050
287	51.755	0.182	3.28	98	2.0	-	71	-0.020	4.92	2.054

BOX B TEST DATA - ASTM E2780 / ASTM E2515

Client: HHT
Model: Pioneer III
Run #: 2

Job #: 24-253
Tracking #: 180
Technician: SJB
Date: 2/7/2024

	Particulate Sampling Data							Flue Gas Data		
Elapsed Time (min)	Gas Meter (ft^3)	Sample Rate (cfm)	Orifice dH (in H_2O)	Meter Temp (°F)	Meter Vacuum (in Hg)	Pro. Rate (%)	Filter (°F)	Flue Draft (in H_2O)	CO_2 (%)	CO (%)
288	51.934	0.179	3.27	98	2.0	-	71	-0.020	4.90	2.063
289	52.117	0.183	3.28	98	2.1	-	71	-0.020	4.99	2.100
290	52.300	0.183	3.28	98	2.0	98	71	-0.021	5.06	2.124
291	52.482	0.182	3.28	98	1.7	-	71	-0.021	4.91	2.081
292	52.666	0.184	3.27	98	1.8	-	71	-0.020	4.96	2.095
293	52.848	0.182	3.28	98	2.1	-	71	-0.018	4.98	2.133
294	53.028	0.180	3.28	98	2.2	-	71	-0.019	5.29	2.399
295	53.211	0.183	3.27	98	1.7	-	71	-0.021	5.44	2.601
296	53.393	0.182	3.28	98	2.2	-	71	-0.021	5.74	2.585
297	53.577	0.184	3.27	98	1.9	-	71	-0.020	6.48	2.054
298	53.760	0.183	3.28	98	2.0	-	71	-0.017	6.64	1.852
299	53.942	0.182	3.28	98	1.9	-	71	-0.019	6.65	1.796
300	54.123	0.181	3.28	98	2.1	98	71	-0.019	6.21	1.849
301	54.301	0.178	3.27	98	2.2	-	71	-0.020	6.04	1.880
302	54.486	0.185	3.28	98	2.1	-	71	-0.021	6.06	1.966
303	54.670	0.184	3.28	98	2.1	-	71	-0.020	5.99	1.975
304	54.853	0.183	3.28	98	2.1	-	71	-0.021	5.96	1.981
305	55.032	0.179	3.28	98	2.1	-	71	-0.021	6.04	2.035
306	55.213	0.181	3.27	98	2.2	-	71	-0.020	6.05	2.076
307	55.397	0.184	3.28	98	2.2	-	70	-0.020	5.97	2.054
308	55.579	0.182	3.27	98	2.2	-	70	-0.021	6.04	2.098
309	55.763	0.184	3.27	98	1.9	-	70	-0.019	6.00	2.083
310	55.946	0.183	3.28	98	2.2	98	70	-0.020	5.94	2.078
311	56.128	0.182	3.28	98	1.9	-	70	-0.018	6.06	2.103
312	56.307	0.179	3.27	98	1.7	-	70	-0.022	6.02	2.078
313	56.490	0.183	3.28	98	2.0	-	70	-0.022	5.91	2.120
314	56.669	0.179	3.27	98	2.1	-	70	-0.021	6.01	2.201
315	56.853	0.184	3.28	98	1.7	-	70	-0.021	5.95	2.018
316	57.039	0.186	3.28	98	1.7	-	70	-0.019	5.93	2.002
317	57.218	0.179	3.28	98	2.0	-	70	-0.019	5.98	2.035
318	57.404	0.186	3.28	98	1.8	-	70	-0.019	6.01	2.076
319	57.584	0.180	3.28	98	2.1	-	70	-0.020	5.90	2.055

BOX B TEST DATA - ASTM E2780 / ASTM E2515

Client: HHT
Model: Pioneer III
Run #: 2

Job #: 24-253
Tracking #: 180
Technician: SJB
Date: 2/7/2024

	Particulate Sampling Data							Flue Gas Data		
Elapsed Time (min)	Gas Meter (ft^3)	Sample Rate (cfm)	Orifice dH (in H_2O)	Meter Temp (°F)	Meter Vacuum (in Hg)	Pro. Rate (%)	Filter (°F)	Flue Draft (in H_2O)	CO_2 (%)	CO (%)
320	57.766	0.182	3.27	98	2.2	98	70	-0.020	5.86	2.079
321	57.949	0.183	3.28	98	1.8	-	70	-0.019	5.79	2.091
322	58.129	0.180	3.28	98	2.0	-	70	-0.020	5.72	2.074
323	58.315	0.186	3.28	98	2.2	-	70	-0.023	5.91	2.113
324	58.497	0.182	3.28	98	1.8	-	70	-0.021	5.89	2.115
325	58.676	0.179	3.27	98	2.2	-	70	-0.020	5.89	2.148
326	58.856	0.180	3.27	98	2.0	-	70	-0.023	5.86	2.129
327	59.041	0.185	3.28	97	2.2	-	70	-0.020	5.86	2.098
328	59.224	0.183	3.27	97	1.9	-	70	-0.021	5.84	2.114
329	59.408	0.184	3.27	97	1.7	-	70	-0.021	5.90	2.098
330	59.589	0.181	3.28	97	1.7	99	70	-0.020	5.85	2.043
331	59.766	0.177	3.28	97	2.1	-	70	-0.021	5.89	2.069
332	59.949	0.183	3.28	97	2.0	-	70	-0.018	5.96	2.137
333	60.134	0.185	3.28	97	1.7	-	70	-0.022	5.85	2.148
334	60.314	0.180	3.27	97	2.1	-	70	-0.022	5.89	2.221
335	60.498	0.184	3.28	97	1.8	-	70	-0.021	5.74	2.209
336	60.682	0.184	3.28	97	2.0	-	70	-0.023	5.77	2.208
337	60.863	0.181	3.28	97	1.9	-	70	-0.021	5.81	2.236
338	61.045	0.182	3.28	97	2.2	-	70	-0.022	5.87	2.275
339	61.227	0.182	3.28	97	2.1	-	70	-0.024	5.81	2.285
340	61.407	0.180	3.28	97	2.2	98	70	-0.021	5.70	2.252
341	61.594	0.187	3.28	97	2.0	-	70	-0.019	5.75	2.263
342	61.772	0.178	3.28	97	2.2	-	70	-0.023	5.66	2.297
343	61.957	0.185	3.28	97	1.7	-	70	-0.021	5.68	2.348
344	62.138	0.181	3.29	97	2.1	-	70	-0.021	5.65	2.392
345	62.319	0.181	3.27	97	2.1	-	70	-0.021	5.63	2.526
346	62.503	0.184	3.28	97	2.2	-	70	-0.023	5.70	2.573
347	62.686	0.183	3.28	97	1.7	-	70	-0.024	5.70	2.583
348	62.868	0.182	3.27	97	1.9	-	70	-0.018	5.77	2.603
349	63.050	0.182	3.28	97	2.0	-	70	-0.021	5.73	2.621
350	63.230	0.180	3.28	97	2.2	98	70	-0.021	5.64	2.612
351	63.409	0.179	3.28	97	1.9	-	70	-0.020	5.64	2.611

BOX B TEST DATA - ASTM E2780 / ASTM E2515

Client: HHT
Model: Pioneer III
Run #: 2

Job #: 24-253
Tracking #: 180
Technician: SJB
Date: 2/7/2024

	Particulate Sampling Data							Flue Gas Data		
Elapsed Time (min)	Gas Meter (ft^3)	Sample Rate (cfm)	Orifice dH (in H_2O)	Meter Temp (°F)	Meter Vacuum (in Hg)	Pro. Rate (%)	Filter (°F)	Flue Draft (in H_2O)	CO_2 (%)	CO (%)
352	63.596	0.187	3.28	97	2.1	-	70	-0.022	5.77	2.700
353	63.778	0.182	3.28	97	1.8	-	70	-0.022	5.67	2.659
354	63.961	0.183	3.28	97	1.9	-	70	-0.022	5.69	2.661
355	64.143	0.182	3.28	97	2.2	-	70	-0.021	5.73	2.705
356	64.323	0.180	3.29	97	1.8	-	70	-0.020	5.77	2.751
357	64.505	0.182	3.28	97	2.0	-	70	-0.019	5.80	2.748
358	64.689	0.184	3.28	97	1.7	-	70	-0.021	5.66	2.734
359	64.868	0.179	3.28	97	1.9	-	70	-0.023	5.76	2.797
360	65.054	0.186	3.28	97	2.0	99	70	-0.021	5.70	2.766
361	65.236	0.182	3.28	97	2.0	-	70	-0.020	5.72	2.765
362	65.412	0.176	3.28	97	2.0	-	70	-0.023	5.76	2.799
363	65.597	0.185	3.27	97	2.1	-	70	-0.022	5.71	2.782
364	65.781	0.184	3.28	97	2.2	-	70	-0.023	5.72	2.792
365	65.963	0.182	3.28	97	1.7	-	70	-0.021	5.71	2.813
366	66.146	0.183	3.28	97	1.8	-	70	-0.022	5.75	2.821
367	66.328	0.182	3.28	97	2.2	-	70	-0.021	5.70	2.788
368	66.507	0.179	3.28	97	1.7	-	70	-0.020	5.68	2.811
369	66.690	0.183	3.28	97	1.9	-	70	-0.021	5.74	2.838
370	66.873	0.183	3.29	97	2.1	100	70	-0.023	5.65	2.795
371	67.055	0.182	3.28	97	1.9	-	70	-0.022	5.67	2.821
372	67.235	0.180	3.28	97	2.0	-	70	-0.022	5.66	2.820
373	67.420	0.185	3.28	97	1.9	-	70	-0.019	5.74	2.858
374	67.597	0.177	3.28	97	1.7	-	70	-0.022	5.72	2.857
375	67.782	0.185	3.27	97	1.7	-	70	-0.022	5.69	2.849
376	67.964	0.182	3.29	97	2.1	-	70	-0.023	5.76	2.881
377	68.147	0.183	3.28	97	2.2	-	70	-0.021	5.81	2.901
378	68.328	0.181	3.27	97	2.0	-	70	-0.022	5.74	2.875
379	68.512	0.184	3.28	97	1.8	-	70	-0.022	5.77	2.904
380	68.689	0.177	3.28	97	1.9	99	70	-0.022	5.82	2.925
381	68.875	0.186	3.28	97	1.9	-	70	-0.022	5.81	2.912
382	69.056	0.181	3.28	97	1.8	-	70	-0.022	5.86	2.918
383	69.239	0.183	3.28	97	1.7	-	70	-0.021	5.79	2.857

BOX B TEST DATA - ASTM E2780 / ASTM E2515

Client: HHT
Model: Pioneer III
Run #: 2

Job #: 24-253
Tracking #: 180
Technician: SJB
Date: 2/7/2024

	Particulate Sampling Data							Flue Gas Data		
Elapsed Time (min)	Gas Meter (ft^3)	Sample Rate (cfm)	Orifice dH (in H_2O)	Meter Temp (°F)	Meter Vacuum (in Hg)	Pro. Rate (%)	Filter (°F)	Flue Draft (in H_2O)	CO_2 (%)	CO (%)
384	69.420	0.181	3.28	97	2.1	-	70	-0.021	5.79	2.879
385	69.605	0.185	3.28	97	2.0	-	70	-0.022	5.73	2.848
386	69.786	0.181	3.28	97	2.2	-	70	-0.021	5.73	2.759
387	69.967	0.181	3.28	97	2.1	-	70	-0.022	5.73	2.651
388	70.149	0.182	3.28	97	2.2	-	70	-0.022	5.77	2.633
389	70.329	0.180	3.28	97	1.8	-	70	-0.020	5.83	2.634
390	70.516	0.187	3.28	97	1.7	100	70	-0.021	5.77	2.611
391	70.697	0.181	3.28	97	1.7	-	70	-0.022	5.74	2.590
392	70.874	0.177	3.28	97	2.0	-	70	-0.019	5.77	2.636
393	71.060	0.186	3.28	97	2.1	-	70	-0.022	5.67	2.641
394	71.241	0.181	3.28	97	1.8	-	70	-0.021	5.65	2.665
395	71.422	0.181	3.28	97	2.1	-	70	-0.022	5.63	2.693
396	71.608	0.186	3.28	97	2.0	-	70	-0.020	5.55	2.668
397	71.789	0.181	3.27	97	1.7	-	70	-0.021	5.61	2.742
398	71.971	0.182	3.28	97	1.8	-	70	-0.018	5.65	2.767
399	72.151	0.180	3.29	97	2.2	-	70	-0.021	5.65	2.746
400	72.333	0.182	3.28	97	2.2	99	70	-0.023	5.67	2.751
401	72.513	0.180	3.28	97	1.9	-	70	-0.022	5.71	2.794
402	72.699	0.186	3.29	97	1.7	-	70	-0.023	5.63	2.761
403	72.881	0.182	3.28	97	2.0	-	70	-0.021	5.79	2.516
404	73.063	0.182	3.28	97	2.1	-	70	-0.020	6.23	2.243
405	73.243	0.180	3.28	97	1.9	-	70	-0.020	6.40	2.142
406	73.425	0.182	3.28	97	2.1	-	70	-0.019	6.53	2.172
407	73.606	0.181	3.29	97	2.0	-	70	-0.019	6.40	2.173
408	73.791	0.185	3.29	97	1.9	-	70	-0.019	6.33	2.231
409	73.970	0.179	3.28	97	1.9	-	70	-0.021	6.29	2.285
410	74.152	0.182	3.28	97	2.0	99	70	-0.021	6.27	2.306
411	74.333	0.181	3.28	97	2.0	-	70	-0.019	6.15	2.295
412	74.518	0.185	3.28	97	1.7	-	70	-0.021	6.25	2.346
413	74.698	0.180	3.28	96	1.8	-	69	-0.020	6.07	2.602
414	74.881	0.183	3.28	97	2.0	-	70	-0.020	6.10	2.790
415	75.066	0.185	3.29	97	2.1	-	70	-0.023	6.34	2.754

BOX B TEST DATA - ASTM E2780 / ASTM E2515

Client: HHT
Model: Pioneer III
Run #: 2

Job #: 24-253
Tracking #: 180
Technician: SJB
Date: 2/7/2024

	Particulate Sampling Data							Flue Gas Data		
Elapsed Time (min)	Gas Meter (ft^3)	Sample Rate (cfm)	Orifice dH (in H_2O)	Meter Temp (°F)	Meter Vacuum (in Hg)	Pro. Rate (%)	Filter (°F)	Flue Draft (in H_2O)	CO_2 (%)	CO (%)
416	75.244	0.178	3.28	97	1.9	-	70	-0.021	6.25	2.699
417	75.428	0.184	3.29	97	2.1	-	70	-0.020	6.29	2.757
418	75.610	0.182	3.28	97	2.2	-	70	-0.024	6.25	2.775
419	75.790	0.180	3.28	97	1.9	-	70	-0.021	6.28	2.830
420	75.972	0.182	3.28	96	1.9	99	70	-0.022	6.24	2.866
421	76.154	0.182	3.29	97	1.9	-	70	-0.022	6.20	2.873
422	76.336	0.182	3.28	97	1.9	-	70	-0.022	6.30	2.923
423	76.516	0.180	3.28	97	1.8	-	70	-0.021	6.72	2.465
424	76.702	0.186	3.29	97	1.7	-	70	-0.021	6.70	2.428
425	76.885	0.183	3.28	97	2.0	-	70	-0.020	6.66	2.398
426	77.067	0.182	3.29	97	2.1	-	70	-0.023	6.70	2.345
427	77.247	0.180	3.28	96	1.7	-	70	-0.019	6.62	2.358
428	77.429	0.182	3.28	97	2.0	-	70	-0.023	6.55	2.390
429	77.608	0.179	3.29	97	1.7	-	70	-0.021	6.53	2.354
430	77.790	0.182	3.28	96	2.0	98	70	-0.019	6.78	2.214
431	77.974	0.184	3.29	97	1.8	-	70	-0.021	6.85	1.938
432	78.158	0.184	3.28	97	1.9	-	70	-0.022	6.79	1.960
433	78.339	0.181	3.28	97	2.1	-	70	-0.023	6.48	2.328
434	78.521	0.182	3.29	96	1.7	-	70	-0.022	6.63	2.177
435	78.700	0.179	3.28	96	2.1	-	70	-0.022	6.68	2.087
436	78.882	0.182	3.28	97	2.0	-	70	-0.022	6.76	2.130
437	79.066	0.184	3.28	97	1.7	-	70	-0.022	6.64	2.147
438	79.247	0.181	3.28	97	1.8	-	70	-0.022	6.52	2.128
439	79.434	0.187	3.28	97	2.0	-	70	-0.024	6.48	2.172
440	79.615	0.181	3.29	97	2.2	100	70	-0.020	6.55	2.178
441	79.792	0.177	3.28	97	1.9	-	70	-0.022	6.44	2.115
442	79.977	0.185	3.28	96	1.8	-	69	-0.021	6.40	2.162
443	80.157	0.180	3.29	96	2.0	-	70	-0.022	6.44	2.220
444	80.339	0.182	3.29	97	1.9	-	70	-0.021	6.41	2.206
445	80.526	0.187	3.28	96	1.8	-	70	-0.023	6.26	2.153
446	80.707	0.181	3.28	96	1.7	-	70	-0.024	6.31	2.170
447	80.887	0.180	3.29	96	2.1	-	70	-0.022	6.37	2.154

BOX B TEST DATA - ASTM E2780 / ASTM E2515

Client: HHT
Model: Pioneer III
Run #: 2

Job #: 24-253
Tracking #: 180
Technician: SJB
Date: 2/7/2024

	Particulate Sampling Data							Flue Gas Data		
Elapsed Time (min)	Gas Meter (ft^3)	Sample Rate (cfm)	Orifice dH (in H_2O)	Meter Temp (°F)	Meter Vacuum (in Hg)	Pro. Rate (%)	Filter (°F)	Flue Draft (in H_2O)	CO_2 (%)	CO (%)
448	81.069	0.182	3.28	96	2.1	-	70	-0.020	6.38	2.159
449	81.249	0.180	3.29	96	1.7	-	70	-0.022	6.21	2.221
450	81.435	0.186	3.28	96	2.0	99	69	-0.021	6.06	2.264
451	81.618	0.183	3.28	96	1.9	-	70	-0.020	5.79	2.160
452	81.796	0.178	3.28	96	2.0	-	70	-0.022	5.77	2.151
453	81.980	0.184	3.28	96	2.1	-	70	-0.020	5.71	2.106
454	82.162	0.182	3.29	96	1.7	-	70	-0.019	5.83	2.114
455	82.340	0.178	3.29	96	2.1	-	69	-0.020	5.91	2.320
456	82.523	0.183	3.28	96	1.8	-	69	-0.023	5.94	2.383
457	82.707	0.184	3.28	96	2.1	-	69	-0.021	5.93	2.369
458	82.891	0.184	3.29	96	2.0	-	69	-0.020	6.31	1.994
459	83.068	0.177	3.29	96	1.7	-	69	-0.021	6.38	1.945
460	83.254	0.186	3.29	96	2.0	99	69	-0.019	6.40	1.889
461	83.435	0.181	3.28	96	2.1	-	70	-0.020	6.32	1.847
462	83.618	0.183	3.28	96	2.1	-	70	-0.021	6.07	1.730
463	83.799	0.181	3.28	96	2.1	-	69	-0.022	5.69	2.317
464	83.983	0.184	3.29	96	2.2	-	69	-0.019	5.31	2.605
465	84.164	0.181	3.29	96	1.9	-	69	-0.022	5.24	2.728
466	84.345	0.181	3.29	96	1.7	-	69	-0.020	5.25	2.811
467	84.526	0.181	3.28	96	1.8	-	69	-0.023	5.44	2.949
468	84.710	0.184	3.28	96	2.0	-	70	-0.022	5.50	3.005
469	84.893	0.183	3.29	96	2.1	-	69	-0.022	5.56	3.102
470	85.074	0.181	3.28	96	1.8	100	69	-0.021	5.60	3.172
471	85.256	0.182	3.29	96	2.0	-	69	-0.021	5.70	3.241
472	85.437	0.181	3.28	96	2.2	-	69	-0.022	5.72	3.209
473	85.618	0.181	3.28	96	2.1	-	69	-0.020	6.04	2.953
474	85.802	0.184	3.28	96	1.8	-	69	-0.021	5.98	2.758
475	85.984	0.182	3.28	96	2.2	-	69	-0.020	6.00	2.829
476	86.166	0.182	3.28	96	2.2	-	69	-0.022	5.91	2.798
477	86.348	0.182	3.28	96	1.7	-	69	-0.019	5.81	2.760
478	86.528	0.180	3.29	96	1.7	-	69	-0.024	5.88	2.803
479	86.709	0.181	3.28	96	2.1	-	69	-0.020	5.81	2.792

BOX B TEST DATA - ASTM E2780 / ASTM E2515

Client: HHT
Model: Pioneer III
Run #: 2

Job #: 24-253
Tracking #: 180
Technician: SJB
Date: 2/7/2024

	Particulate Sampling Data							Flue Gas Data		
Elapsed Time (min)	Gas Meter (ft^3)	Sample Rate (cfm)	Orifice dH (in H_2O)	Meter Temp (°F)	Meter Vacuum (in Hg)	Pro. Rate (%)	Filter (°F)	Flue Draft (in H_2O)	CO_2 (%)	CO (%)
480	86.893	0.184	3.28	96	2.0	99	69	-0.022	5.78	2.844
481	87.075	0.182	3.28	96	2.0	-	69	-0.024	5.72	2.864
482	87.257	0.182	3.28	96	2.1	-	69	-0.022	5.68	2.897
483	87.436	0.179	3.28	96	2.2	-	69	-0.021	5.63	2.869
484	87.619	0.183	3.28	96	1.7	-	69	-0.020	5.70	2.923
485	87.801	0.182	3.28	96	1.7	-	69	-0.023	5.66	2.923
486	87.985	0.184	3.28	96	2.1	-	69	-0.021	5.63	2.891
487	88.167	0.182	3.29	96	1.8	-	69	-0.020	5.61	2.881
488	88.346	0.179	3.28	96	1.8	-	69	-0.022	5.60	2.799
489	88.531	0.185	3.28	96	2.2	-	69	-0.024	5.79	2.600
490	88.711	0.180	3.28	96	1.8	99	69	-0.022	5.92	2.476
491	88.893	0.182	3.28	96	1.7	-	69	-0.022	5.95	2.440
492	89.076	0.183	3.28	96	2.1	100	69	-0.022	5.93	2.438
Avg/Tot	89.076	0.181	3.25	95.2	2.0	100	74.5	-0.037	7.04	1.694

BOX C TEST DATA - ASTM E2780 / ASTM E2515

Client: HHT
Model: Pioneer III
Run #: 2

Job #: 24-253
Tracking #: 180
Technician: SJB
Date: 2/7/2024

	Particulate Sampling Data						
Elapsed Time (min)	Gas Meter (ft^3)	Sample Rate (cfm)	Orifice dH (in H_2O)	Meter Temp (°F)	Meter Vacuum (in Hg)	Pro. Rate (%)	Filter (°F)
0	-0.001		0.00	74	0.1		60
1	0.120	0.121	1.01	73	1.8	-	62
2	0.264	0.144	0.99	73	1.8	-	66
3	0.408	0.144	1.00	73	1.8	-	68
4	0.553	0.145	1.00	73	1.9	-	69
5	0.696	0.143	0.99	73	1.8	-	72
6	0.839	0.143	0.99	74	1.9	-	72
7	0.983	0.144	0.99	74	1.8	-	73
8	1.128	0.145	1.00	74	1.8	-	74
9	1.271	0.143	1.01	74	1.7	-	74
10	1.415	0.144	1.00	74	1.8	102	74
11	1.559	0.144	0.99	75	1.9	-	74
12	1.706	0.147	0.98	75	2.0	-	74
13	1.850	0.144	0.99	75	2.0	-	74
14	1.994	0.144	1.00	75	2.0	-	74
15	2.135	0.141	0.99	76	1.8	-	74
16	2.282	0.147	0.99	76	1.9	-	74
17	2.426	0.144	0.99	76	1.8	-	74
18	2.571	0.145	1.00	76	1.9	-	74
19	2.716	0.145	1.01	76	1.9	-	74
20	2.861	0.145	1.01	77	1.9	104	74
21	3.006	0.145	1.00	77	1.9	-	74
22	3.151	0.145	1.00	78	1.8	-	74
23	3.297	0.146	1.00	78	1.8	-	74
24	3.442	0.145	1.01	78	1.8	-	74
25	3.589	0.147	1.02	78	1.8	-	74
26	3.737	0.148	1.03	78	1.8	-	74
27	3.884	0.147	1.03	79	1.8	-	74
28	4.031	0.147	1.03	79	2.0	-	74
29	4.178	0.147	1.03	79	1.9	-	74
30	4.326	0.148	1.03	79	2.0	104	74
31	4.473	0.147	1.03	80	1.8	-	74

BOX C TEST DATA - ASTM E2780 / ASTM E2515

Client: HHT
Model: Pioneer III
Run #: 2

Job #: 24-253
Tracking #: 180
Technician: SJB
Date: 2/7/2024

	Particulate Sampling Data						
Elapsed Time (min)	Gas Meter (ft^3)	Sample Rate (cfm)	Orifice dH (in H_2O)	Meter Temp (°F)	Meter Vacuum (in Hg)	Pro. Rate (%)	Filter (°F)
32	4.621	0.148	1.02	80	2.0	-	74
33	4.768	0.147	1.02	80	2.0	-	74
34	4.916	0.148	1.03	81	1.9	-	74
35	5.064	0.148	1.02	81	1.8	-	74
36	5.212	0.148	1.02	81	2.0	-	74
37	5.360	0.148	1.02	82	1.8	-	74
38	5.508	0.148	1.03	82	1.9	-	74
39	5.656	0.148	1.02	82	1.8	-	74
40	5.805	0.149	1.03	82	2.0	104	74
41	5.953	0.148	1.03	82	1.8	-	74
42	6.101	0.148	1.03	83	1.9	-	74
43	6.250	0.149	1.03	83	1.8	-	74
44	6.398	0.148	1.03	83	2.0	-	74
45	6.545	0.147	1.04	83	2.0	-	74
46	6.695	0.150	1.04	83	1.8	-	75
47	6.844	0.149	1.04	84	1.9	-	75
48	6.990	0.146	1.04	84	1.9	-	75
49	7.140	0.150	1.07	84	1.9	-	75
50	7.292	0.152	1.07	84	1.8	104	75
51	7.443	0.151	1.06	84	1.9	-	75
52	7.594	0.151	1.06	84	2.0	-	75
53	7.746	0.152	1.05	84	2.0	-	75
54	7.897	0.151	1.06	84	2.0	-	75
55	8.049	0.152	1.05	85	1.8	-	75
56	8.198	0.149	1.05	85	1.9	-	75
57	8.352	0.154	1.07	85	2.0	-	75
58	8.504	0.152	1.07	85	1.8	-	75
59	8.656	0.152	1.07	85	1.8	-	75
60	8.807	0.151	1.07	86	1.8	105	75
Avg/Tot	8.808	0.147	1.01	79.2	1.8	104	73.3

WOODSTOVE SURFACE TEMPERATURE DATA

Client: HHT
Model: Pioneer III
Run #: 2

Job #: 24-253
Tracking #: 180
Technician: SJB
Date: 2/7/2024

Stove ΔT: 169

	Temperature Data (°F)						
Elapsed Time (min)	FB Left	FB Right	FB Back	FB Top	FB Bottom	Stove Surface Average	Catalyst Exit
0	446	466	298	403	296	381.7	N/A
1	448	466	312	387	297	382.1	N/A
2	450	466	319	381	300	382.9	N/A
3	449	465	320	389	302	384.9	N/A
4	449	464	322	394	303	386.3	N/A
5	449	463	320	432	304	393.6	N/A
6	452	464	341	449	305	402.4	N/A
7	453	463	332	453	303	400.6	N/A
8	455	461	328	455	302	400.2	N/A
9	458	459	325	457	302	400.0	N/A
10	459	458	321	460	301	399.6	N/A
11	459	456	316	461	300	398.5	N/A
12	460	438	311	461	300	394.0	N/A
13	459	404	305	461	299	385.5	N/A
14	457	434	299	462	299	390.1	N/A
15	455	417	293	465	298	385.3	N/A
16	453	335	285	461	298	366.3	N/A
17	450	297	279	452	298	355.3	N/A
18	448	301	274	441	298	352.2	N/A
19	445	292	269	435	298	347.7	N/A
20	442	292	264	435	298	346.1	N/A
21	438	280	259	439	298	342.7	N/A
22	435	267	254	444	298	339.6	N/A
23	431	263	250	448	299	338.0	N/A
24	428	260	245	451	299	336.5	N/A
25	424	259	241	452	299	335.2	N/A
26	421	258	237	454	300	334.0	N/A
27	418	256	234	457	300	332.9	N/A
28	415	255	231	458	301	331.9	N/A
29	412	253	228	459	301	330.6	N/A
30	409	252	226	459	301	329.3	N/A
31	406	253	223	456	301	327.9	N/A
32	404	254	221	452	302	326.3	N/A
33	401	258	219	449	301	325.7	N/A
34	399	261	217	447	302	325.0	N/A
35	397	262	215	447	302	324.4	N/A
36	394	253	213	447	302	321.8	N/A
37	392	250	212	450	302	321.0	N/A
38	390	248	210	452	302	320.4	N/A
39	387	246	208	455	302	319.5	N/A
40	385	244	207	457	302	319.1	N/A
41	383	242	206	459	302	318.4	N/A
42	381	248	205	459	302	319.0	N/A
43	379	248	204	458	302	318.2	N/A
44	377	249	204	458	302	317.8	N/A
45	376	248	203	457	302	317.0	N/A
46	375	250	202	456	301	316.9	N/A
47	373	252	202	455	301	316.6	N/A

WOODSTOVE SURFACE TEMPERATURE DATA

Client: HHT
Model: Pioneer III
Run #: 2

Job #: 24-253
Tracking #: 180
Technician: SJB
Date: 2/7/2024

Stove ΔT: 169

	Temperature Data (°F)						
Elapsed Time (min)	FB Left	FB Right	FB Back	FB Top	FB Bottom	Stove Surface Average	Catalyst Exit
48	372	264	202	454	301	318.5	N/A
49	371	247	202	453	301	314.7	N/A
50	370	246	201	452	301	313.9	N/A
51	368	244	202	450	300	312.8	N/A
52	367	245	201	449	300	312.5	N/A
53	367	246	201	448	299	312.2	N/A
54	366	247	202	448	300	312.5	N/A
55	365	248	202	448	299	312.5	N/A
56	365	249	202	449	299	312.8	N/A
57	364	248	203	451	299	313.0	N/A
58	364	248	202	452	299	312.9	N/A
59	364	247	201	453	298	312.6	N/A
60	364	247	201	453	298	312.7	N/A
61	365	248	201	452	298	312.6	N/A
62	365	249	201	450	297	312.4	N/A
63	365	250	201	448	298	312.2	N/A
64	366	253	201	447	297	312.7	N/A
65	367	256	201	444	297	312.9	N/A
66	367	247	200	442	296	310.5	N/A
67	368	245	201	439	296	309.9	N/A
68	369	244	201	436	296	309.2	N/A
69	369	245	200	435	295	308.7	N/A
70	370	244	201	433	296	308.6	N/A
71	370	243	200	432	295	308.1	N/A
72	370	242	201	431	295	307.8	N/A
73	371	242	201	430	295	307.5	N/A
74	372	243	201	429	294	307.7	N/A
75	372	238	201	429	294	306.6	N/A
76	373	230	201	429	294	305.1	N/A
77	373	232	201	429	293	305.8	N/A
78	373	233	201	430	293	306.1	N/A
79	374	219	201	431	292	303.4	N/A
80	374	218	202	432	292	303.5	N/A
81	374	211	202	432	292	302.3	N/A
82	374	245	202	433	292	309.4	N/A
83	375	272	202	434	292	315.0	N/A
84	375	282	203	436	291	317.3	N/A
85	375	287	203	438	291	318.6	N/A
86	375	270	203	438	290	315.3	N/A
87	375	275	204	438	290	316.3	N/A
88	375	288	204	438	289	318.8	N/A
89	375	276	204	438	289	316.5	N/A
90	375	324	204	439	289	326.2	N/A
91	375	375	204	440	288	336.4	N/A
92	375	405	205	441	288	342.7	N/A
93	375	406	205	442	287	342.8	N/A
94	375	407	205	444	287	343.6	N/A
95	375	409	205	445	287	344.2	N/A

WOODSTOVE SURFACE TEMPERATURE DATA

Client: HHT
Model: Pioneer III
Run #: 2

Job #: 24-253
Tracking #: 180
Technician: SJB
Date: 2/7/2024

Stove ΔT: 169

	Temperature Data (°F)						
Elapsed Time (min)	FB Left	FB Right	FB Back	FB Top	FB Bottom	Stove Surface Average	Catalyst Exit
96	376	410	206	445	286	344.4	N/A
97	375	269	206	445	286	316.2	N/A
98	376	265	206	443	285	315.0	N/A
99	376	276	206	441	285	316.8	N/A
100	376	264	207	439	284	314.0	N/A
101	377	256	208	437	284	312.2	N/A
102	377	242	208	436	283	309.3	N/A
103	378	244	209	434	283	309.5	N/A
104	379	253	210	432	282	311.3	N/A
105	379	260	211	431	282	312.4	N/A
106	380	262	211	429	282	312.6	N/A
107	381	284	212	427	281	317.2	N/A
108	382	307	213	426	281	321.6	N/A
109	383	303	214	425	281	321.0	N/A
110	384	279	214	424	280	316.2	N/A
111	385	291	215	424	280	319.0	N/A
112	386	291	215	423	280	319.2	N/A
113	387	290	216	422	279	318.9	N/A
114	388	291	217	422	279	319.3	N/A
115	389	296	218	421	279	320.6	N/A
116	391	322	219	420	279	325.9	N/A
117	392	313	219	419	278	324.2	N/A
118	393	312	220	419	278	324.5	N/A
119	394	302	221	419	278	323.0	N/A
120	396	263	222	420	278	315.7	N/A
121	397	266	223	421	278	317.0	N/A
122	399	267	223	422	278	317.7	N/A
123	400	265	224	422	278	318.0	N/A
124	402	263	225	422	277	317.6	N/A
125	403	261	226	421	278	317.6	N/A
126	405	260	227	420	278	317.7	N/A
127	406	260	228	418	277	317.9	N/A
128	407	261	228	416	278	318.2	N/A
129	409	266	229	413	277	319.0	N/A
130	410	287	230	411	277	323.1	N/A
131	412	349	232	409	277	335.6	N/A
132	413	423	233	408	277	350.7	N/A
133	415	425	234	407	278	351.6	N/A
134	417	425	235	407	278	352.1	N/A
135	419	425	236	406	278	352.6	N/A
136	420	425	237	405	278	353.2	N/A
137	422	425	239	404	279	353.7	N/A
138	424	425	241	402	279	354.0	N/A
139	426	425	243	400	279	354.3	N/A
140	427	425	245	397	279	354.5	N/A
141	429	425	247	393	280	354.7	N/A
142	431	424	249	389	280	354.7	N/A
143	433	425	250	386	280	354.7	N/A

WOODSTOVE SURFACE TEMPERATURE DATA

Client: HHT
Model: Pioneer III
Run #: 2

Job #: 24-253
Tracking #: 180
Technician: SJB
Date: 2/7/2024

Stove ΔT: 169

	Temperature Data (°F)						
Elapsed Time (min)	FB Left	FB Right	FB Back	FB Top	FB Bottom	Stove Surface Average	Catalyst Exit
144	434	425	253	382	281	354.8	N/A
145	434	426	255	378	281	354.7	N/A
146	436	425	258	374	282	354.9	N/A
147	437	426	260	370	283	355.0	N/A
148	437	426	262	366	283	354.8	N/A
149	438	426	263	362	284	354.4	N/A
150	438	426	264	358	284	354.1	N/A
151	438	426	266	354	284	353.8	N/A
152	438	427	267	351	285	353.4	N/A
153	437	426	268	347	285	352.5	N/A
154	438	426	268	343	286	352.1	N/A
155	437	427	269	338	287	351.4	N/A
156	436	427	269	333	289	350.6	N/A
157	435	426	269	328	290	349.6	N/A
158	434	426	269	323	291	348.6	N/A
159	433	425	268	319	293	347.5	N/A
160	432	424	267	315	294	346.2	N/A
161	430	423	266	311	295	345.0	N/A
162	429	421	265	306	297	343.6	N/A
163	427	420	264	303	298	342.2	N/A
164	426	418	263	299	298	340.7	N/A
165	424	416	261	295	299	339.0	N/A
166	422	414	260	292	300	337.4	N/A
167	419	412	258	289	300	335.6	N/A
168	418	409	256	285	301	333.7	N/A
169	415	406	254	282	301	331.7	N/A
170	412	404	252	279	301	329.7	N/A
171	410	401	251	276	301	327.7	N/A
172	407	398	249	273	301	325.8	N/A
173	405	396	247	271	302	323.8	N/A
174	402	393	245	268	301	321.8	N/A
175	399	390	244	265	301	319.8	N/A
176	397	387	242	262	301	317.9	N/A
177	394	376	241	260	301	314.3	N/A
178	392	379	239	258	301	313.5	N/A
179	388	370	237	255	300	310.1	N/A
180	386	354	235	253	300	305.7	N/A
181	383	349	234	252	299	303.4	N/A
182	380	336	233	250	299	299.5	N/A
183	378	342	231	248	298	299.4	N/A
184	375	347	230	246	298	299.2	N/A
185	373	329	229	245	297	294.6	N/A
186	370	333	228	243	297	294.2	N/A
187	368	328	227	241	296	291.8	N/A
188	365	337	226	239	296	292.6	N/A
189	362	330	225	237	295	290.0	N/A
190	360	335	224	236	295	289.8	N/A
191	357	324	223	234	294	286.4	N/A

WOODSTOVE SURFACE TEMPERATURE DATA

Client: HHT
Model: Pioneer III
Run #: 2

Job #: 24-253
Tracking #: 180
Technician: SJB
Date: 2/7/2024

Stove ΔT: 169

	Temperature Data (°F)						
Elapsed Time (min)	FB Left	FB Right	FB Back	FB Top	FB Bottom	Stove Surface Average	Catalyst Exit
192	355	328	221	233	294	285.9	N/A
193	352	317	221	231	293	282.8	N/A
194	350	307	220	230	292	279.8	N/A
195	348	302	219	228	292	277.7	N/A
196	345	306	218	227	291	277.5	N/A
197	343	301	218	225	291	275.5	N/A
198	341	306	217	224	290	275.5	N/A
199	338	305	217	223	289	274.2	N/A
200	336	282	216	221	289	268.7	N/A
201	334	281	216	220	288	267.6	N/A
202	332	268	215	218	288	264.2	N/A
203	330	258	215	217	287	261.2	N/A
204	328	241	214	216	286	256.9	N/A
205	325	239	213	215	285	255.5	N/A
206	323	238	212	214	285	254.3	N/A
207	321	235	211	213	284	252.9	N/A
208	319	229	210	212	283	250.8	N/A
209	316	229	210	212	283	249.9	N/A
210	314	223	208	211	282	247.7	N/A
211	311	215	207	210	281	244.9	N/A
212	309	213	206	210	281	243.6	N/A
213	307	212	204	209	280	242.2	N/A
214	256	209	203	208	279	231.0	N/A
215	236	208	202	207	279	226.2	N/A
216	215	207	201	207	278	221.4	N/A
217	216	206	200	206	277	220.7	N/A
218	199	204	198	205	276	216.6	N/A
219	189	202	197	205	276	213.8	N/A
220	176	202	197	204	275	210.7	N/A
221	164	201	196	203	274	207.5	N/A
222	162	200	195	203	273	206.4	N/A
223	163	202	194	202	272	206.4	N/A
224	174	205	194	201	272	209.1	N/A
225	206	206	193	201	271	215.3	N/A
226	267	209	193	200	270	227.9	N/A
227	279	217	193	200	270	231.7	N/A
228	278	220	193	199	269	231.9	N/A
229	276	226	192	199	269	232.3	N/A
230	275	230	193	198	268	232.8	N/A
231	274	231	193	198	268	232.5	N/A
232	273	227	192	197	268	231.2	N/A
233	272	231	192	196	267	231.7	N/A
234	270	228	192	196	267	230.7	N/A
235	270	224	193	196	266	229.8	N/A
236	269	226	193	195	266	229.7	N/A
237	268	224	193	195	266	229.0	N/A
238	267	222	193	194	265	228.2	N/A
239	266	223	193	194	265	228.1	N/A

WOODSTOVE SURFACE TEMPERATURE DATA

Client: HHT
Model: Pioneer III
Run #: 2

Job #: 24-253
Tracking #: 180
Technician: SJB
Date: 2/7/2024

Stove ΔT: 169

	Temperature Data (°F)						
Elapsed Time (min)	FB Left	FB Right	FB Back	FB Top	FB Bottom	Stove Surface Average	Catalyst Exit
240	265	219	193	194	265	226.9	N/A
241	264	216	192	194	264	226.1	N/A
242	264	218	192	193	264	226.2	N/A
243	263	216	192	193	264	225.5	N/A
244	262	213	192	193	264	224.6	N/A
245	261	214	192	193	263	224.5	N/A
246	261	211	192	192	263	223.7	N/A
247	260	212	192	192	263	223.7	N/A
248	260	211	192	192	262	223.2	N/A
249	259	206	191	191	262	222.0	N/A
250	259	223	191	191	262	225.2	N/A
251	258	221	191	191	261	224.3	N/A
252	257	220	191	190	261	223.8	N/A
253	257	216	190	190	261	222.9	N/A
254	257	209	190	190	260	221.1	N/A
255	256	205	190	189	260	220.1	N/A
256	256	205	190	189	260	219.9	N/A
257	256	218	190	189	260	222.3	N/A
258	255	218	189	189	259	222.1	N/A
259	255	219	189	188	259	222.1	N/A
260	254	218	189	188	259	221.4	N/A
261	254	213	188	188	258	220.2	N/A
262	254	208	188	187	258	218.9	N/A
263	253	204	188	187	258	218.0	N/A
264	253	203	188	186	257	217.5	N/A
265	253	202	188	186	257	217.1	N/A
266	252	207	188	185	257	217.8	N/A
267	252	203	187	185	257	216.6	N/A
268	252	196	187	184	256	215.2	N/A
269	252	195	187	184	256	214.6	N/A
270	252	191	187	183	256	213.7	N/A
271	252	187	186	183	255	212.7	N/A
272	252	187	186	182	255	212.4	N/A
273	251	187	186	181	255	212.1	N/A
274	251	183	186	181	255	211.1	N/A
275	251	183	186	181	255	210.9	N/A
276	251	184	185	180	254	210.8	N/A
277	251	184	185	180	254	210.8	N/A
278	251	184	185	179	254	210.5	N/A
279	250	182	184	179	254	209.8	N/A
280	250	182	184	178	253	209.6	N/A
281	250	180	184	178	253	208.8	N/A
282	250	187	183	178	253	210.0	N/A
283	249	247	183	177	252	221.7	N/A
284	249	190	183	177	252	210.2	N/A
285	249	188	183	177	252	209.7	N/A
286	249	191	183	176	251	210.0	N/A
287	248	199	183	176	251	211.5	N/A

WOODSTOVE SURFACE TEMPERATURE DATA

Client: HHT
Model: Pioneer III
Run #: 2

Job #: 24-253
Tracking #: 180
Technician: SJB
Date: 2/7/2024

Stove ΔT: 169

	Temperature Data (°F)						
Elapsed Time (min)	FB Left	FB Right	FB Back	FB Top	FB Bottom	Stove Surface Average	Catalyst Exit
288	248	220	183	175	251	215.6	N/A
289	248	244	184	175	251	220.1	N/A
290	248	242	183	175	250	219.5	N/A
291	248	242	184	174	250	219.3	N/A
292	247	242	183	174	250	219.3	N/A
293	247	202	184	174	249	211.3	N/A
294	247	241	184	174	249	218.9	N/A
295	247	240	184	175	249	218.8	N/A
296	247	240	184	175	248	218.8	N/A
297	247	239	184	176	248	218.6	N/A
298	246	238	184	176	248	218.4	N/A
299	246	206	183	176	247	211.8	N/A
300	246	175	183	177	247	205.6	N/A
301	246	169	182	177	247	203.9	N/A
302	246	166	181	177	247	203.3	N/A
303	245	163	181	177	247	202.5	N/A
304	245	163	180	177	246	202.3	N/A
305	245	163	180	177	246	202.1	N/A
306	244	162	179	177	246	201.7	N/A
307	244	162	179	178	246	201.5	N/A
308	243	162	178	178	245	201.2	N/A
309	243	161	178	178	245	200.9	N/A
310	242	161	178	178	245	200.6	N/A
311	241	161	178	178	245	200.4	N/A
312	241	160	177	178	244	200.2	N/A
313	240	160	177	179	244	199.9	N/A
314	239	160	176	179	244	199.8	N/A
315	239	160	176	179	244	199.6	N/A
316	239	161	176	179	244	199.7	N/A
317	238	161	176	179	244	199.6	N/A
318	237	161	176	180	243	199.5	N/A
319	237	161	175	179	243	199.3	N/A
320	236	161	176	179	243	199.1	N/A
321	236	162	175	179	243	199.0	N/A
322	236	162	175	180	243	199.0	N/A
323	236	162	175	180	243	198.8	N/A
324	235	162	174	180	243	198.7	N/A
325	235	161	174	180	243	198.6	N/A
326	235	161	174	180	242	198.5	N/A
327	235	161	174	180	242	198.4	N/A
328	235	162	173	180	242	198.3	N/A
329	235	161	173	180	242	198.2	N/A
330	234	161	173	180	242	198.0	N/A
331	234	161	172	180	242	197.8	N/A
332	234	161	172	180	242	197.8	N/A
333	234	161	172	180	241	197.7	N/A
334	234	161	172	180	241	197.6	N/A
335	234	161	172	180	241	197.4	N/A

WOODSTOVE SURFACE TEMPERATURE DATA

Client: HHT
Model: Pioneer III
Run #: 2

Job #: 24-253
Tracking #: 180
Technician: SJB
Date: 2/7/2024

Stove ΔT: 169

	Temperature Data (°F)						
Elapsed Time (min)	FB Left	FB Right	FB Back	FB Top	FB Bottom	Stove Surface Average	Catalyst Exit
336	233	161	172	180	241	197.4	N/A
337	234	161	171	180	241	197.3	N/A
338	234	161	171	180	241	197.3	N/A
339	233	161	171	180	241	197.2	N/A
340	234	161	171	180	241	197.2	N/A
341	234	161	170	180	240	197.1	N/A
342	234	162	170	180	240	197.2	N/A
343	234	162	170	180	240	197.1	N/A
344	234	162	170	180	240	197.1	N/A
345	234	162	170	180	240	197.1	N/A
346	234	162	170	179	240	197.1	N/A
347	234	162	170	179	240	197.0	N/A
348	234	162	170	180	240	197.0	N/A
349	234	162	169	180	239	196.8	N/A
350	233	162	169	179	239	196.7	N/A
351	233	162	169	179	239	196.6	N/A
352	233	162	169	179	239	196.6	N/A
353	233	162	169	179	239	196.5	N/A
354	233	162	169	179	239	196.5	N/A
355	233	162	169	180	239	196.4	N/A
356	233	162	169	180	239	196.4	N/A
357	233	162	169	180	238	196.4	N/A
358	233	162	169	180	239	196.2	N/A
359	232	162	168	180	238	196.2	N/A
360	232	162	169	180	238	196.2	N/A
361	232	162	168	180	238	196.2	N/A
362	232	162	169	180	238	196.2	N/A
363	232	162	169	180	238	196.3	N/A
364	232	162	168	180	238	196.2	N/A
365	233	162	169	180	238	196.2	N/A
366	232	162	168	181	238	196.2	N/A
367	232	162	169	180	238	196.2	N/A
368	232	162	169	181	238	196.1	N/A
369	232	162	168	181	237	196.0	N/A
370	232	162	168	181	238	196.2	N/A
371	232	162	169	181	238	196.2	N/A
372	232	162	169	181	238	196.3	N/A
373	232	162	169	181	238	196.3	N/A
374	233	162	170	181	238	196.5	N/A
375	232	163	170	181	238	196.7	N/A
376	232	163	170	181	238	196.8	N/A
377	232	163	171	181	238	197.0	N/A
378	233	164	171	181	238	197.2	N/A
379	232	164	171	181	238	197.2	N/A
380	232	164	172	182	238	197.4	N/A
381	232	164	172	182	237	197.6	N/A
382	233	165	173	182	238	198.0	N/A
383	233	167	173	182	237	198.3	N/A

WOODSTOVE SURFACE TEMPERATURE DATA

Client: HHT
Model: Pioneer III
Run #: 2

Job #: 24-253
Tracking #: 180
Technician: SJB
Date: 2/7/2024

Stove ΔT: 169

	Temperature Data (°F)						
Elapsed Time (min)	FB Left	FB Right	FB Back	FB Top	FB Bottom	Stove Surface Average	Catalyst Exit
384	233	166	173	182	237	198.1	N/A
385	233	166	173	182	237	198.1	N/A
386	233	166	174	182	237	198.3	N/A
387	232	166	174	182	237	198.4	N/A
388	233	167	174	182	237	198.4	N/A
389	232	167	174	182	237	198.5	N/A
390	233	169	174	182	237	198.9	N/A
391	233	170	175	182	237	199.1	N/A
392	233	171	175	181	237	199.2	N/A
393	233	172	175	181	237	199.5	N/A
394	233	173	175	181	237	199.8	N/A
395	233	173	175	181	237	199.8	N/A
396	234	182	175	181	237	201.6	N/A
397	234	185	175	180	236	202.2	N/A
398	234	225	175	180	236	210.2	N/A
399	234	224	175	180	236	210.0	N/A
400	235	233	175	180	236	211.7	N/A
401	235	223	175	180	236	209.7	N/A
402	236	216	175	179	236	208.3	N/A
403	236	191	175	179	236	203.4	N/A
404	236	186	174	179	236	202.3	N/A
405	236	185	174	179	236	202.0	N/A
406	236	187	174	179	236	202.3	N/A
407	237	189	173	179	236	202.8	N/A
408	237	186	173	179	235	202.0	N/A
409	238	183	172	179	235	201.5	N/A
410	238	183	172	179	235	201.5	N/A
411	239	215	171	179	235	207.8	N/A
412	240	244	171	179	235	213.6	N/A
413	240	191	171	179	235	203.1	N/A
414	241	204	170	180	235	206.0	N/A
415	243	243	170	180	234	214.1	N/A
416	243	243	169	181	234	214.1	N/A
417	244	212	168	182	234	208.0	N/A
418	245	216	168	182	234	209.0	N/A
419	246	241	167	183	234	214.3	N/A
420	247	241	167	183	234	214.2	N/A
421	247	241	166	183	234	214.2	N/A
422	248	241	166	184	234	214.3	N/A
423	249	211	165	184	234	208.5	N/A
424	249	219	164	184	234	210.1	N/A
425	250	240	164	184	234	214.2	N/A
426	250	240	163	185	234	214.3	N/A
427	251	240	163	185	233	214.3	N/A
428	252	240	162	185	234	214.4	N/A
429	252	240	162	185	234	214.5	N/A
430	252	240	162	186	234	214.5	N/A
431	252	240	162	186	234	214.6	N/A

WOODSTOVE SURFACE TEMPERATURE DATA

Client: HHT
Model: Pioneer III
Run #: 2

Job #: 24-253
Tracking #: 180
Technician: SJB
Date: 2/7/2024

Stove ΔT: 169

	Temperature Data (°F)						
Elapsed Time (min)	FB Left	FB Right	FB Back	FB Top	FB Bottom	Stove Surface Average	Catalyst Exit
432	253	240	161	186	234	214.8	N/A
433	253	241	161	186	234	215.0	N/A
434	254	241	161	186	234	215.0	N/A
435	254	241	161	186	234	215.2	N/A
436	254	242	161	187	234	215.4	N/A
437	254	242	161	187	234	215.6	N/A
438	254	242	161	187	234	215.6	N/A
439	254	243	161	187	234	215.7	N/A
440	254	243	161	187	235	215.8	N/A
441	254	244	161	187	235	215.9	N/A
442	254	244	161	187	235	216.0	N/A
443	253	244	161	187	235	216.0	N/A
444	253	244	161	187	235	216.1	N/A
445	253	245	161	187	235	216.1	N/A
446	253	245	161	187	235	216.2	N/A
447	253	245	161	187	236	216.2	N/A
448	253	245	161	187	236	216.3	N/A
449	252	246	161	187	236	216.3	N/A
450	252	246	161	186	236	216.2	N/A
451	252	247	161	185	236	216.1	N/A
452	252	247	161	184	236	215.9	N/A
453	251	247	161	183	236	215.7	N/A
454	251	247	161	184	236	215.8	N/A
455	251	189	161	184	237	204.1	N/A
456	250	168	161	184	236	199.9	N/A
457	249	165	161	184	237	199.1	N/A
458	249	164	161	184	237	198.9	N/A
459	248	164	161	184	237	198.7	N/A
460	247	163	161	184	237	198.3	N/A
461	246	163	160	184	237	198.1	N/A
462	245	164	160	184	237	198.1	N/A
463	245	166	160	183	237	198.3	N/A
464	244	175	160	183	237	199.8	N/A
465	243	190	160	182	238	202.5	N/A
466	242	250	160	181	238	214.3	N/A
467	242	252	160	181	238	214.6	N/A
468	241	252	160	181	238	214.5	N/A
469	241	252	160	182	238	214.4	N/A
470	241	251	160	182	238	214.2	N/A
471	241	251	159	182	239	214.1	N/A
472	241	250	159	182	239	214.1	N/A
473	240	249	159	182	239	214.0	N/A
474	241	249	159	183	239	214.0	N/A
475	241	248	159	183	239	213.8	N/A
476	241	247	158	183	239	213.7	N/A
477	241	247	158	183	239	213.5	N/A
478	241	246	158	183	240	213.6	N/A
479	241	246	158	184	240	213.5	N/A

WOODSTOVE SURFACE TEMPERATURE DATA

Client: HHT
Model: Pioneer III
Run #: 2

Job #: 24-253
Tracking #: 180
Technician: SJB
Date: 2/7/2024

Stove ΔT: 169

	Temperature Data (°F)						
Elapsed Time (min)	FB Left	FB Right	FB Back	FB Top	FB Bottom	Stove Surface Average	Catalyst Exit
480	241	245	158	184	240	213.4	N/A
481	241	245	157	184	240	213.3	N/A
482	241	244	157	184	240	213.3	N/A
483	242	244	157	184	240	213.3	N/A
484	242	243	157	184	240	213.2	N/A
485	242	243	157	184	241	213.2	N/A
486	242	243	157	184	241	213.2	N/A
487	242	243	157	184	241	213.2	N/A
488	242	242	157	184	241	213.1	N/A
489	242	242	156	184	241	213.0	N/A
490	242	242	156	184	241	212.9	N/A
491	242	242	156	184	241	213.0	N/A
492	242	241	156	184	241	212.9	N/A
Average	308.0	251.7	199.3	269.7	265.4	258.8	N/A

LAB SAMPLE DATA - ASTM E2515

Client: HHT
Model: Pioneer III
Run #: 2

Job #: 24-253
Tracking #: 180
Technician: SJB
Date: 2/7/2024

		Sample ID	Tare, mg	Final, mg	Catch, mg
Filters	**A**	G871	230.8	239.4	8.6
	B	G872	231.1	240.2	9.1
	C - 1st Hour	G873	231.2	239.6	8.4
	Amb	G874	230.7	230.7	0.0
Probes	**A**	12A	116705.7	116707.2	1.5
	B	12B	117771.9	117773.3	1.4
	C - 1st Hour	12C	117171.4	117172.7	1.3
O-rings	**A**	12A	3586.3	3586.8	0.5
	B	12B	3551.0	3551.4	0.4
	C - 1st Hour	12C	3616.5	3616.9	0.4

Placed in Dessicator on:	2/8 - 9:00

Balance Audit (mg):		100.0		100.0		100.0		
		Weight (mg)	Date/Time	Weight (mg)	Date/Time	Weight (mg)	Date/Time	Weight (mg)	Date/Time
Filters	**A**	239.5	2/9 - 10:00	239.4	2/16 - 11:00				
	B	240.3	2/9 - 10:00	240.2	2/16 - 11:00				
	C - 1st Hour	239.5	2/9 - 10:00	239.6	2/16 - 11:00				
	Amb	230.7	2/9 - 10:00	230.7	2/16 - 11:00				
Probes	**A**	116707.2	2/9 - 10:00	116707.2	2/16 - 11:00				
	B	117773.4	2/9 - 10:00	117773.3	2/16 - 11:00				
	C - 1st Hour	117173.1	2/9 - 10:00	117172.7	2/16 - 11:00	117172.7	2/19 - 8:30		
O-Rings	**A**	3586.9	2/9 - 10:00	3586.8	2/16 - 11:00				
	B	3551.6	2/9 - 10:00	3551.4	2/16 - 11:00				
	C - 1st Hour	3617.1	2/9 - 10:00	3616.9	2/16 - 11:00				

Train A Aggregate, mg:	**10.6**
Train B Aggregate, mg:	**10.9**
Train C Aggregate, mg:	**10.1**
Ambient, mg:	**0.0**

Run 2 Alternative Dt Evaluation

Pioneer-III		
Stove Metal Mass	486.6	lb
Stove Refractory Mass	55.6	lb
dT	168.8	F
Fuel dry mass	25.42	dry lb
QFC	216629.2	
0.085(QFC)	**18413.5**	
DQH	**10090.9**	VALID

ASTM E2780 Wood Heater Run Sheets

Client: HHT Job Number: 24-253 Tracking #: 180
Model: Pioneer III Run Number: 2 Test Date: 2/7/2024

Wood Heater Run Notes

Test Control Settings

Primary Air Setting(s): N/A – Thermostat controlled
Targeted Burn Category: Cat 1

Preburn Notes

Time	Notes
10:12	Started kindling for with ~3.5 lbs of fuel, thermostat set to heat demand
10:30	Loaded 1st pre burn load ~16lbs
11:40	@1.5 lbs scooped and zeroed appliance, loaded 2nd preburn load, thermostat still set to heat demand
11:58	@23.8 lbs, turned thermostat heat demand off, began logging 1-hr preburn test
13:07	Leveled coal bed and zeroed scale in preparation of test loading.

Test Notes

Test Burn Start Time: 13:09 Test Fuel Loaded by: 40 seconds
Door Closed: 300 seconds Air Control Set at: 0 seconds
Other Loading Notes: N/A

Time	Notes
13:09	Loaded fuel, left door cracked open 1", thermostat not calling for heat for duration of test
13:11	Closed door handle half closed per manufacturers instructions
13:14	Closed door, pushed SBT button per instructions
9:21	End of test

Test Burn End Time: 9:21

Flue Gas Concentration Measurement

Calibration Gas Values: Span Gas CO_2 (%): 16.98 CO (%): 4.300
Mid Gas CO_2 (%): 10.09 CO (%): 2.53

Calibration Results:

	Pre Test			Post Test		
	Zero	Mid	Span	Zero	Mid	Span
Time	11:10	11:15	11:12	2/8 – 9:14	2/8 – 9:10	2/8 – 9:16
CO_2	0.00	9.95	16.95	0.07	10.15	17.12
CO	0.000	2.494	4.303	0.008	2.543	4.325

Flue Gas Probe Leak Check: Initial: No Leakage Final: No Leakage

Technician Signature: Date: 2/8/2024

ASTM E2780 Wood Heater Run Sheets

Client: HHT Job Number: 24-253 Tracking #: 180
Model: Pioneer III Run Number: 2 Test Date: 2/7/2024

Test Fuel Side View

Test Fuel Iso View

Test Fuel Loaded in Stove

N/A – Automated stove controlled by thermostat

Air Setting

Technician Signature: Date: 2/8/2024

ASTM E2780 Wood Heater Run Sheets

Client: HHT Job Number: 24-253 Tracking #: 180
Model: Pioneer III Run Number: 2 Test Date: 2/7/2024

REVISION HISTORY

Version Number	Issue Date	Summary of Changes
Version 1.0	20-Sep-22	Initial release into the BMS

DOCUMENT APPROVAL

Version Number	Approval Date	Approved by
Version 1.0	20-Sep-22	John Steinert

Technician Signature: Date: 2/8/2024

Sample Calculations – ASTM E2780 & E2515

Client: HHT
Model: Pioneer III
Run: 1

Equations used to calculate the parameters listed below are described in this appendix. Sample calculations are provided for each equation. The raw data and printout results from a sample run are also provided for comparison to the sample calculations.

M_{Sdb} – Weight of test fuel spacers, dry basis, kg

M_{Cdb}– Weight of test fuel crib, excluding nails and spacers, dry basis, kg

D_{Cdb} - Density of fuel crib, excluding spacers and nails, dry basis, lbs/ft^3

M_{FTAdb} - Total weight of fuel crib excluding nails, dry basis, kg

BR – Dry burn rate, kg/hr

V_s – Average gas velocity in the dilution tunnel, ft/sec

Q_{sd} – Average gas flow rate in dilution tunnel, dscf/hr

$V_{m(std)}$ – Volume of gas sampled, corrected to dry standard conditions, dscf

m_n – Total particulate matter collected, mg

C_s - Concentration of particulate matter in tunnel gas, dry basis, corrected to STP, g/dscf

E_T – Total particulate emissions, g

PR - Proportional rate variation

PM_R – Particulate emissions for test run, g/hr

PM_F – Particulate emission factor for test run, g/dry kg of fuel burned

M_{Sdb} – Weight of test fuel spacers, dry basis, kg
ASTM E2780 equation (1)

$$M_{Sdb} = (M_{Swb})(100/(100 + FM_S))$$

Where,

FM_S = average fuel moisture of test fuel spacers, % dry basis

M_{Swb} = weight of test fuel spacers, wet basis, kg

Sample Calculation:

FM_S = 9.0 %

M_{Swb} = 2.3 lbs

0.4536 = Conversion factor from lbs to kg

M_{Sdb} = [(2.3 x 0.4536) (100/(100 + 9.0)

M_{Sdb} = **0.97** kg

M_{Cdb}– Weight of test fuel crib, excluding nails and spacers, dry basis, kg
ASTM E2780 equation (2)

$$M_{Cdb} = \Sigma[(M_{CPnwb})(100/(100 + FM_{CPn}))]$$

Where,

M_{CPnwb}	=	weight of each test fuel piece n in fuel crib, excluding nails and spacers, wet basis, kg
FM_{CPn}	=	Average fuel moisture of test fuel n in fuel crib, % dry basis

Sample Calculation (test fuel piece 1):

MC_{Pnwb} = 4.81
FM_{CPn} = 23.5

= 4.8 (100/(100+ 23.5)
= 3.9 lbs

Total dry crib weight, excluding spacers = 23.34 lbs
M_{Cdb} = **10.59** kg

D_{Cdb} - Density of fuel crib, excluding spacers and nails, dry basis, lbs/ft^3
ASTM E2780 equation (3)

$$D_{Cdb} = M_{Cdb}/V_C$$

Where,

V_C = Volume of fuel crib, ft^3

Sample calculation:

V_C = 1332 in^3

1728 = conversion from in^3 to ft^3

D_{Cdb} = 23.34 / 1332 * 1728

= **30.27** lbs/ft^3

M_{FTAdb} - Total weight of fuel crib excluding nails, dry basis, kg
ASTM E2780 equation (4)

$$M_{FTAdb} = M_{Sdb} + M_{Cdb}$$

Sample calculation:

$$M_{FTAdb} = 0.97 + 10.59$$

$$= \#\#\#\# \text{ kg}$$

BR – dry burn rate, kg/hr
ASTM E2780 equation (5)

$$BR = \frac{60\ M_{FTAdb}}{\theta}$$

Where,

θ = Total length of test run, min

Sample Calculation:

M_{Bdb} = 11.56 kg
θ = 479 min

$$BR = \frac{60 \times 11.6}{479}$$

BR = **1.45** kg/hr

V_s – Average gas velocity in the dilution tunnel, ft/sec
ASTM E2515 equations (9)

$$v_s = F_P \times k_p \times C_p \times (\sqrt{\Delta P})_{avg} \times \sqrt{\frac{T_{s(avg)}}{P_s \times M_s}}$$

Where:

F_p	=	Adjustment factor for pitot tube center point reading = $\frac{V_{strav}}{V_{scent}}$, ASTM E2515 Equation (1)
v_{scent}	=	Dilution tunnel velocity calculated after the multi-point pitot traverse at the center, ft/sec
v_{strav}	=	Dilution tunnel velocity calculated after the multi-point pitot traverse, ft/sec
k_p	=	Pitot tube constant, 85.49
C_p	=	Pitot tube coefficient: 0.99, unitless
ΔP*	=	Velocity pressure in the dilution tunnel, in H_2O
T_s	=	Absolute average gas temperature in the dilution tunnel, °R; (°R = °F + 460)
P_s	=	Absolute average gas static pressure in dilution tunnel, = P_{bar} + P_g , in Hg
P_{bar}	=	Barometric pressure at test site, in. Hg
P_g	=	Static pressure of tunnel, in. H_20; (in Hg = in H_20/13.6)
M_s	=	
		**The dilution tunnel wet molecular weight; M_s = 28.78 assuming a dry weight of 29 lb/lb-mole

Sample calculation:

$$Fp = \frac{18.88}{19.68} = 0.959$$

$$V_s = 0.959 \times 85.49 \times 0.99 \times 0.285 \times \left(\frac{95.5 + 460}{\left(29.63 + \frac{-0.14}{13.6}\right) \times 28.78} \right)^{1/2}$$

V_s = **18.65** ft/s

*The ASTM test standard mistakenly has the square root of the average delta p instead of the average of the square root of delta p. The current EPA Method 2 is also incorrect. This was verified by Mike Toney at EPA.

**The ASTM test standard mistakenly identifies Ms as the dry molecular weight. It should be the wet molecular weight as indicated in EPA Method 2.

Q_{sd} – Average gas flow rate in dilution tunnel, dscf/hr
ASTM E2515 equation (3)

$$Q_{sd} = 3600 \times (1 - B_{ws}) \times v_s \times A \times \frac{T_{std}}{T_{s(avg)}} \times \frac{P_s}{P_{std}}$$

Where:

3600	=	Conversion from seconds to hours (ASTM method uses 60 to convert in minutes)
B_{ws}	=	Water vapor in gas stream, proportion by volume; assume 2%
A	=	Cross sectional area of dilution tunnel, ft^2
T_{std}	=	Standard absolute temperature, 528 °R
P_s	=	Absolute average gas static pressure in dilution tunnel, = P_{bar} + P_g , in Hg
$T_{s(avg)}$	=	Absolute average gas temperature in the dilution tunnel, °R; (°R = °F + 460)
P_{std}	=	Standard absolute pressure, 29.92 in Hg

Sample calculation:

$$Q_{sd} = 3600 \times (1 - 0.02) \times 18.65 \times 0.1963 \times \frac{528}{95.5 + 460} \times \frac{29.63 + \frac{-0.14}{13.6}}{29.92}$$

Q_{sd} = **12158.5** dscf/hr

$V_{m(std)}$ – Volume of Gas Sampled Corrected to Dry Standard Conditions, dscf
ASTM E2515 equation (6)

$$V_{m(std)} = K_1 \, V_m \, Y \frac{P_{bar} + \left(\frac{\Delta H}{13.6}\right)}{T_m}$$

Where:

K_1	=	17.64 °R/in. Hg
V_m	=	Volume of gas sample measured at the dry gas meter, dcf
Y	=	Dry gas meter calibration factor, dimensionless
P_{bar}	=	Barometric pressure at the testing site, in. Hg
ΔH	=	Average pressure differential across the orifice meter, in. H_2O
T_m	=	Absolute average dry gas meter temperature, °R

Sample Calculation:

Using equation for Train A:

$$V_{m(std)} = 17.64 \times 87.166 \times 1.004 \times \frac{\left(29.63 + \frac{3.22}{13.6}\right)}{(97.5 + 460)}$$

$V_{m(std)}$ = **82.711** dscf

Using equation for Train B:

$$V_{m(std)} = 17.64 \times 86.963 \times 1.005 \times \frac{\left(29.63 + \frac{3.27}{13.6}\right)}{(96.9 + 460)}$$

$V_{m(std)}$ = **82.686** dscf

Using equation for ambient train:

$$V_{m(std)} = 17.64 \times 38.39 \times 1.013 \times \frac{\left(\underline{29.63} + \frac{0.00}{13.6}\right)}{(69.8 + 460)}$$

$V_{m(std)}$ = **38.362** dscf

m_n – Total Particulate Matter Collected, mg
ASTM E2515 Equation (12)

$$m_n = m_p + m_f + m_g$$

Where:

m_p	=	mass of particulate matter from probe, mg
m_f	=	mass of particulate matter from filters, mg
m_g	=	mass of particulate matter from filter seals, mg

Sample Calculation:

Using equation for Train A:

m_n = 0.4 + 6.2 + 0.6

m_n = **7.2** mg

Using equation for Train B:

m_n = 0.6 + 6.1 + 1.6

m_n = **8.3** mg

C_s - Concentration of particulate matter in tunnel gas, dry basis, corrected to STP, g/dscf
ASTM E2515 equation (13)

$$C_s = K_2 \times \frac{m_n}{V_{m(std)}}$$

Where:

K_2	=	Constant, 0.001 g/mg
m_n	=	Total mass of particulate matter collected in the sampling train, mg
$V_{m(std)}$	=	Volume of gas sampled corrected to dry standard conditions, dscf

Sample calculation:

For Train A:

$$C_s = 0.001 \times \frac{7.2}{82.71}$$

C_s = **0.00009** g/dscf

For Train B

$$C_s = 0.001 \times \frac{8.3}{82.69}$$

C_s = **0.00010** g/dscf

For Ambient Train

$$C_r = 0.001 \times \frac{0.0}{38.36}$$

C_r = **0.000000** g/dscf

E_T – Total Particulate Emissions, g
ASTM E2515 equation (15)

$$E_T = (c_s - c_r) \times Q_{std} \times \theta$$

Where:

C_s	=	Concentration of particulate matter in tunnel gas, g/dscf
C_r	=	Concentration particulate matter room air, g/dscf
Q_{std}	=	Average dilution tunnel gas flow rate, dscf/hr
θ	=	Total time of test run, minutes

Sample calculation:

For Train A

E_T = (0.000087 - 0.000000) x 12158.5 x 479 /60

E_T = **8.45** g

For Train B

E_T = (0.000100 - 0.000000) x 12158.5 x 479 /60

E_T = **9.74** g

Average

E = **9.10** g

PR - Proportional Rate Variation

ASTM E2515 equation (16)

$$PR = \left[\frac{\theta \times V_{mi} \times V_s \times T_m \times T_{si}}{\theta_i \times V_m \times V_{si} \times T_{mi} \times T_s} \right] \times 100$$

Where:

θ	=	Total sampling time, min
θ_i	=	Length of recording interval, min
V_{mi}	=	Volume of gas sample measured by the dry gas meter during the “ith” time interval, dcf
V_m	=	Volume of gas sample as measured by dry gas meter, dcf
V_{si}	=	Average gas velocity in the dilution tunnel during the "ith" time interval, ft/sec
V_s	=	Average gas velocity in the dilution tunnel, ft/sec
T_{mi}	=	Absolute average dry gas meter temperature during the "ith" time interval, ^oR
T_m	=	Absolute average dry gas meter temperature, ^oR
T_{si}	=	Absolute average gas temperature in the dilution tunnel during the "ith" time interval, ^oR
T_s	=	Absolute average gas temperature in the dilution tunnel, ^oR

Sample calculation (for the first 10-min interval of Train 1):

$$PR = \left(\frac{479 \times 1.594 \times 18.65 \times (153.2 + 460) \times (97.5 + 460)}{10 \times 87.166 \times 19.47 \times (95.5 + 460) \times (74.7 + 460)} \right) \times 100$$

PR = **97** %

PM_R – Particulate emissions for test run, g/hr
ASTM E2780 equation (6)

$$PM_R = 60\ (E_T/\theta)$$

Where,

E_T = Total particulate emissions, grams

θ = Total length of full integrated test run, min

Sample Calculation:

E_T (Dual train average) = 9.10 g

θ = 479 min

$$PM_R = 60 \times (9.10 / 479)$$

PM_R = **1.14** g/hr

PM_F – Particulate emission factor for test run, g/dry kg of fuel burned
ASTM E2780 equation (7)

$$PM_F = E_T/M_{FTAdb}$$

Sample Calculation:

E_T (Dual train average)	=	9.10	g
M_{Bdb}	=	11.56	kg
PM_F =		9.10 / ####	
PM_F	=	**0.79**	g/kg

Stack Loss Efficiency and CO emissions calculations are done in accordance with CSA B415.1, using the password protected excel spreadsheet provided with the test standard. No alterations or alternative calculations are used for determining efficiency or CO emissions. The following pages are a sample of the calculations page from the B415.1 Spreadsheet (V2_4 - Dated April 15, 2010).

Manufacturer: HHT
Model: Pioneer III
Date: 02/06/24
Run: 1
Control #: 24-253
Test Duration: 479 min

Note: In the "Input data", "Calc. % O_2", "Fuel Properties", and "Mass Balance" columns, [e], [d], [g], [a]. [b], [c], [h], [u], [w], [j], and [k] refer to their respective variables in Clauses 13.7.3 to 13.7.5.

	HHV	LHV
Eff	67.98%	73.48%
Comb Eff	94.43%	94.43%
HT Eff	72.00%	77.81%
Output	19,334	kJ/h
Burn Rate	1.44	kg/h
Grams CO	914	g
Input	28,440	kJ/h
MC wet	18.62	

Ultimate CO_2
$CO_{2\text{-ult}}$ 19.64
F_0
1.061

Overall Heating Efficiency:	67.98%	Air Fue		
Combustion Efficiency:	94.43%	Dry Molecular W		
Heat Transfer Efficiency:	72.00%	Dry Moles Exhaus		
		Air Fuel Ratio		
Heat Output:	18,341 Btu/h		19,334 kJ/h	
Heat Input:	26,978 Btu/h		28,440 kJ/h	
Burn Duration:	7.98	h		
Burn Rate:	3.16	lb/h	1.436 kg/h	
Stack Temp:	271.3 Deg. F		132.9 Deg. C	

Elapsed Time	Weight Remaining (kg)	% CO [e]	% CO_2 [d]	Excess Air EA	Total O_2	Calc. % O_2 [g]	Flue Gas (°C)	Room Temp (°C)	Combust Eff %	Heat Transfer %	Net Eff %	Air Fuel Ratio	Wet Wt Now Wt
	Averages	1.20	7.44	1.36	20.37	12.33	133.05	21.01	87.9%	79.2%	#DIV/0!	13.86	2.75
	INPUT DATA			Oxygen Calculation			Input Data						
0	14.08	0.14	2.12	768.8%	20.79	18.60	188.4	22.0	97.1%	41.6%	40.4%	52.3	14.08
1	13.99	0.17	1.52	1059.6%	20.83	19.22	235.3	22.0	94.8%	5.8%	5.5%	69.8	13.99
2	13.69	0.12	5.75	235.0%	20.55	14.75	396.7	22.1	99.0%	45.4%	45.0%	20.2	13.69
3	13.49	0.67	8.82	107.1%	20.31	11.16	336.1	22.3	94.4%	64.2%	60.7%	12.4	13.49
4	13.28	0.54	8.85	109.1%	20.32	11.20	362.3	22.2	95.5%	62.2%	59.4%	12.5	13.28
5	13.01	0.58	14.62	29.2%	19.94	5.02	446.9	22.5	96.8%	66.7%	64.6%	7.8	13.01
6	12.89	1.17	10.43	69.3%	20.17	9.16	345.7	22.5	91.7%	66.8%	61.2%	10.0	12.89
7	12.75	0.54	10.16	83.7%	20.23	9.81	322.1	22.7	96.0%	68.1%	65.4%	11.0	12.75
8	12.63	0.57	9.52	94.7%	20.27	10.47	303.7	22.5	95.6%	68.4%	65.3%	11.7	12.63
9	12.51	0.49	9.71	92.7%	20.27	10.32	299.4	22.3	96.2%	69.0%	66.4%	11.6	12.51
10	12.40	0.38	10.06	88.3%	20.25	10.01	300.7	22.2	97.2%	69.6%	67.6%	11.3	12.40
11	12.29	0.51	9.38	98.6%	20.29	10.65	293.0	22.0	95.9%	68.9%	66.1%	11.9	12.29
12	12.17	0.60	9.26	99.2%	20.29	10.73	289.6	22.2	95.2%	68.9%	65.6%	11.9	12.17
13	12.05	0.45	10.05	87.1%	20.25	9.97	293.9	22.1	96.7%	70.0%	67.7%	11.2	12.05
14	11.93	0.33	10.43	82.6%	20.23	9.64	297.1	21.9	97.7%	70.4%	68.7%	11.0	11.93
15	11.81	0.31	10.37	84.0%	20.23	9.71	296.7	22.1	97.8%	70.3%	68.8%	11.1	11.81
16	11.71	0.22	10.11	90.2%	20.26	10.04	293.8	22.1	98.5%	70.2%	69.1%	11.5	11.71
17	11.61	0.49	9.07	105.4%	20.31	10.99	280.7	21.9	96.0%	69.3%	66.5%	12.3	11.61
18	11.50	0.77	8.77	105.9%	20.31	11.15	276.1	21.8	93.6%	69.0%	64.6%	12.3	11.50
19	11.39	0.50	9.75	91.7%	20.26	10.27	285.0	22.2	96.2%	70.2%	67.5%	11.5	11.39
20	11.27	0.38	9.92	90.8%	20.26	10.16	288.1	22.1	97.2%	70.2%	68.3%	11.5	11.27
21	11.17	0.35	9.95	90.6%	20.26	10.13	289.2	21.9	97.4%	70.2%	68.4%	11.5	11.17
22	11.06	0.45	9.83	91.0%	20.26	10.20	290.2	21.9	96.6%	69.9%	67.5%	11.5	11.06
23	10.96	0.30	10.11	88.8%	20.25	10.00	288.8	21.9	97.8%	70.5%	69.0%	11.4	10.96
24	10.85	0.42	9.84	91.5%	20.26	10.22	286.4	21.8	96.8%	70.2%	68.0%	11.5	10.85
25	10.75	0.38	9.69	95.0%	20.27	10.39	282.6	22.1	97.1%	70.3%	68.2%	11.7	10.75
26	10.65	0.47	9.45	98.1%	20.29	10.60	275.8	21.9	96.3%	70.3%	67.7%	11.9	10.65
27	10.55	0.51	9.17	102.9%	20.30	10.88	268.6	21.9	95.8%	70.4%	67.5%	12.1	10.55
28	10.46	0.79	8.66	107.9%	20.32	11.26	266.8	21.9	93.3%	69.5%	64.9%	12.4	10.46
29	10.36	0.89	8.58	107.6%	20.32	11.30	264.9	21.9	92.5%	69.5%	64.3%	12.3	10.36
30	10.27	0.73	8.89	104.4%	20.31	11.06	263.8	21.8	94.0%	70.2%	66.0%	12.2	10.27
31	10.18	0.79	9.10	98.5%	20.29	10.79	262.4	21.8	93.6%	70.7%	66.1%	11.8	10.18
32	10.08	0.74	9.17	98.1%	20.29	10.74	264.0	21.8	94.0%	70.7%	66.5%	11.8	10.08
33	9.99	0.69	9.56	91.7%	20.26	10.36	268.2	21.7	94.6%	71.0%	67.2%	11.4	9.99
34	9.89	0.53	9.98	86.9%	20.25	10.00	267.4	21.8	96.0%	71.8%	68.9%	11.2	9.89
35	9.79	0.68	9.92	85.2%	20.24	9.98	267.7	21.8	94.8%	71.6%	68.0%	11.1	9.79
36	9.70	0.53	10.23	82.5%	20.23	9.73	269.8	21.7	96.1%	72.0%	69.2%	10.9	9.70
37	9.60	0.53	10.53	77.6%	20.21	9.41	270.9	21.9	96.2%	72.3%	69.6%	10.6	9.60

el Ratio (A/F)		
Veight (M_d)	29.68	
st Gas (N_r):	492.07	%HC
o (A/F)	14.10	1.32

Combustion Efficiency:	94.43%		
Total Input (kJ):	227,046	215,342	(Btu)
Total Output (kJ):	154,352	146,396	(Btu)
Efficiency:	67.98%		
Total CO (g):	914.39		

Moisture of Wood (wet basis):	18.6198
Initial Dry Weight Wt_{do} (kg):	11.46
Moisture Content Dry	22.88

Load Weight (kg):	**14.08**			
Fuel Heating	**HHV**	**LHV**		**HHV**
Value in kj/kg - CV:	**19,810**	**18,329**	Btu/lb	**8522.5**

80.50	**2.42**	**78.87**	**227131**	**4.06**	**6.87**	**2.74**	**19810.00**	**18.62**	**79.03**	**20.96**	**2.17**	**7.13**	**0.16**	**0.22**	**34.02**
% Wet Consumed	**Dry Wt. Now**	**% Dry Comsumed**	**Total Input**	**Fuel Properties**				**Mw Moisture Fuel Burnt**	**Mass Balance (moles/100 mole dry flue gas)**					**kg Wood per 100 mole dfp**	
x	**Wt_{dn}**	**y**		**Carbon /12= [a]**	**Hydrogen /1= [b]**	**Oxygen /16= [c]**	**Calorific Value**		**[h]**	**[u]**	**[w]**	**[j]**	**[k]**	**Nk**	**CO_2**
0.00	11.46	0.00	0	4.06	6.87	2.74	19810.00	18.62	79.14	20.99	0.55	1.92	-0.01	0.06	38.45
0.64	11.39	0.64	3877	4.06	6.87	2.74	19810.00	18.62	79.09	20.98	0.42	1.44	-0.01	0.04	36.85
2.77	11.14	2.77	4060	4.06	6.87	2.74	19810.00	18.62	79.39	21.06	1.44	4.97	-0.01	0.14	40.03
4.22	10.98	4.22	3328	4.06	6.87	2.74	19810.00	18.62	79.35	21.05	2.36	7.93	0.08	0.23	37.64
5.70	10.81	5.70	3840	4.06	6.87	2.74	19810.00	18.62	79.41	21.06	2.33	7.88	0.06	0.23	38.21
7.60	10.59	7.60	3182	4.06	6.87	2.74	19810.00	18.62	79.77	21.16	3.76	12.77	0.08	0.37	39.05
8.51	10.49	8.51	2121	4.06	6.87	2.74	19810.00	18.62	79.24	21.02	2.90	9.63	0.16	0.29	36.19
9.47	10.38	9.47	2048	4.06	6.87	2.74	19810.00	18.62	79.50	21.09	2.65	8.97	0.06	0.26	38.55
10.31	10.28	10.31	1902	4.06	6.87	2.74	19810.00	18.62	79.44	21.07	2.50	8.46	0.07	0.25	38.28
11.15	10.18	11.15	1865	4.06	6.87	2.74	19810.00	18.62	79.49	21.08	2.52	8.56	0.05	0.25	38.65
11.95	10.09	11.95	1829	4.06	6.87	2.74	19810.00	18.62	79.56	21.10	2.58	8.78	0.04	0.26	39.20
12.76	10.00	12.76	1865	4.06	6.87	2.74	19810.00	18.62	79.46	21.08	2.45	8.30	0.06	0.24	38.48
13.60	9.90	13.60	1938	4.06	6.87	2.74	19810.00	18.62	79.41	21.06	2.44	8.26	0.07	0.24	38.08
14.47	9.80	14.47	1938	4.06	6.87	2.74	19810.00	18.62	79.53	21.10	2.60	8.83	0.05	0.26	38.89
15.30	9.71	15.30	1865	4.06	6.87	2.74	19810.00	18.62	79.60	21.12	2.66	9.06	0.03	0.26	39.44
16.11	9.61	16.11	1792	4.06	6.87	2.74	19810.00	18.62	79.61	21.12	2.64	9.00	0.03	0.26	39.51
16.88	9.53	16.88	1682	4.06	6.87	2.74	19810.00	18.62	79.63	21.12	2.55	8.72	0.02	0.25	39.90
17.59	9.45	17.59	1682	4.06	6.87	2.74	19810.00	18.62	79.45	21.07	2.37	8.03	0.05	0.24	38.50
18.36	9.36	18.36	1756	4.06	6.87	2.74	19810.00	18.62	79.31	21.04	2.37	7.96	0.09	0.24	37.16
19.14	9.27	19.14	1792	4.06	6.87	2.74	19810.00	18.62	79.49	21.08	2.54	8.60	0.06	0.25	38.62
19.94	9.18	19.94	1792	4.06	6.87	2.74	19810.00	18.62	79.55	21.10	2.54	8.66	0.04	0.25	39.18
20.72	9.09	20.72	1756	4.06	6.87	2.74	19810.00	18.62	79.56	21.10	2.55	8.68	0.03	0.25	39.29
21.49	9.00	21.49	1682	4.06	6.87	2.74	19810.00	18.62	79.51	21.09	2.55	8.64	0.05	0.25	38.83
22.20	8.92	22.20	1646	4.06	6.87	2.74	19810.00	18.62	79.60	21.11	2.57	8.77	0.03	0.26	39.53
22.94	8.83	22.94	1646	4.06	6.87	2.74	19810.00	18.62	79.53	21.09	2.54	8.63	0.05	0.25	38.96
23.65	8.75	23.65	1646	4.06	6.87	2.74	19810.00	18.62	79.53	21.10	2.49	8.47	0.04	0.25	39.11
24.39	8.67	24.39	1609	4.06	6.87	2.74	19810.00	18.62	79.48	21.08	2.46	8.33	0.05	0.24	38.66
25.06	8.59	25.06	1499	4.06	6.87	2.74	19810.00	18.62	79.44	21.07	2.40	8.12	0.06	0.24	38.42
25.71	8.51	25.71	1536	4.06	6.87	2.74	19810.00	18.62	79.29	21.03	2.35	7.88	0.10	0.23	37.02
26.42	8.43	26.42	1536	4.06	6.87	2.74	19810.00	18.62	79.24	21.02	2.36	7.87	0.11	0.23	36.57
27.06	8.36	27.06	1499	4.06	6.87	2.74	19810.00	18.62	79.33	21.04	2.39	8.03	0.09	0.24	37.39
27.74	8.28	27.74	1536	4.06	6.87	2.74	19810.00	18.62	79.32	21.04	2.46	8.26	0.10	0.24	37.17
28.41	8.20	28.41	1536	4.06	6.87	2.74	19810.00	18.62	79.34	21.05	2.46	8.28	0.09	0.25	37.42
29.09	8.13	29.09	1573	4.06	6.87	2.74	19810.00	18.62	79.39	21.06	2.54	8.57	0.08	0.25	37.76
29.80	8.05	29.80	1573	4.06	6.87	2.74	19810.00	18.62	79.49	21.08	2.60	8.82	0.06	0.26	38.52
30.48	7.97	30.48	1536	4.06	6.87	2.74	19810.00	18.62	79.42	21.07	2.63	8.88	0.08	0.26	37.89
31.15	7.89	31.15	1536	4.06	6.87	2.74	19810.00	18.62	79.51	21.09	2.67	9.03	0.06	0.27	38.59
31.83	7.81	31.83	1573	4.06	6.87	2.74	19810.00	18.62	79.53	21.09	2.74	9.28	0.06	0.27	38.64

Moisture Content M_{Cwb}: 18.61979

Dry kg : 11.46
CA: 49
HY: 7
OX: 43.9

LHV
7885.2

61.02	**6.01**	**0.78**	**379.82**	**32.97**	**12.71**	**406.20**	**4559.42**	**3388.60**	**3284.67**	**3250.47**	**4482.61**	**3927.30**	**294.16**	**80339.52**	**82617.01**
Moles per kg of Dry Wood					**Moisture**	**Stack Temp**	**Heat Content Change - Ambient to Stack Temperature Flue Gas Constituent**						**Room Temp**		
O_2	**CO**	**HC**	**N_2**	**H_2O**	**Present**	**K**	**CO_2**	**O_2**	**CO**	**N_2**	**CH_4**	**H_2O**	**K**	**CO_2**	**O_2**
337.15	2.54	-0.17	1434.55	34.87	12.71	461.54	6740.74	5022.80	4871.99	4820.57	6598.70	5826.20	295.15	259.16	1693.46
464.72	4.11	-0.15	1912.32	34.82	12.71	508.43	8785.31	6483.24	6272.93	6210.03	8738.24	7496.54	295.15	323.74	3012.88
102.76	0.83	-0.04	553.13	34.61	12.71	669.87	16308.48	11659.81	11187.53	11095.20	17042.83	13339.76	295.26	652.79	1198.13
47.61	2.84	0.34	338.56	33.85	12.71	609.26	13387.50	9682.73	9319.32	9236.28	13746.62	11121.43	295.43	503.88	460.99
48.33	2.34	0.26	342.77	34.00	12.71	635.48	14637.50	10533.53	10124.56	10037.24	15146.83	12078.00	295.37	559.29	509.09
13.42	1.56	0.21	213.05	34.11	12.71	720.09	18789.43	13307.54	12735.92	12637.75	19911.47	15175.53	295.65	733.67	178.56
31.80	4.08	0.54	275.06	33.44	12.71	618.87	13834.10	9986.71	9607.02	9522.46	14246.87	11463.20	295.65	500.72	317.54
37.23	2.03	0.24	301.73	34.05	12.71	595.26	12714.60	9220.45	8880.63	8800.18	13002.23	10599.91	295.82	490.09	343.32
42.07	2.27	0.26	319.29	34.00	12.71	576.82	11862.64	8634.09	8323.91	8246.80	12062.07	9937.98	295.65	454.08	363.23
41.08	1.94	0.22	316.55	34.09	12.71	572.59	11676.01	8505.72	8202.04	8125.66	11855.98	9793.09	295.43	451.30	349.45
39.00	1.46	0.15	310.12	34.22	12.71	573.82	11734.55	8546.39	8240.77	8164.13	11919.73	9839.17	295.37	460.00	333.35
43.70	2.10	0.24	325.96	34.05	12.71	566.15	11389.82	8308.28	8014.46	7939.22	11541.19	9570.01	295.15	438.24	363.06
44.10	2.45	0.29	326.43	33.95	12.71	562.71	11225.34	8193.62	7905.21	7830.72	11362.86	9439.99	295.32	427.42	361.33
38.56	1.73	0.19	307.66	34.14	12.71	567.09	11429.00	8335.12	8039.90	7964.53	11584.71	9600.26	295.26	444.51	321.44
36.46	1.25	0.12	301.13	34.27	12.71	570.26	11581.12	8441.04	8140.80	8064.75	11749.88	9720.33	295.09	456.72	307.80
37.02	1.19	0.11	303.43	34.30	12.71	569.87	11558.97	8425.36	8125.80	8049.86	11726.39	9702.45	295.21	456.69	311.91
39.61	0.85	0.06	314.25	34.40	12.71	566.98	11426.01	8333.21	8038.13	7962.76	11581.07	9598.17	295.21	455.94	330.12
46.65	2.08	0.23	337.20	34.07	12.71	553.82	10829.44	7919.08	7643.98	7571.18	10930.50	9129.22	295.04	416.98	369.44
47.23	3.25	0.40	335.89	33.73	12.71	549.21	10621.59	7774.33	7506.10	7434.22	10704.86	8965.13	294.98	394.71	367.21
40.67	1.97	0.22	314.90	34.08	12.71	558.15	11016.73	8048.64	7767.17	7693.59	11135.74	9275.75	295.32	425.44	327.35
40.12	1.49	0.15	314.25	34.22	12.71	561.26	11161.25	8149.27	7863.03	7788.80	11292.66	9389.82	295.26	437.24	326.92
39.99	1.39	0.14	314.08	34.25	12.71	562.37	11218.52	8189.55	7901.51	7827.00	11353.98	9435.65	295.09	440.77	327.52
40.28	1.78	0.20	313.98	34.13	12.71	563.32	11261.84	8219.63	7930.14	7855.44	11401.19	9469.71	295.09	437.32	331.09
39.12	1.17	0.11	311.42	34.31	12.71	561.93	11200.26	8177.04	7889.64	7815.20	11333.72	9421.54	295.04	442.80	319.87
40.46	1.68	0.18	314.98	34.16	12.71	559.54	11092.97	8102.64	7818.85	7744.87	11216.53	9337.33	294.98	432.16	327.83
41.95	1.54	0.16	321.04	34.21	12.71	555.71	10909.27	7974.19	7696.36	7623.23	11018.24	9191.51	295.21	426.70	334.55
43.41	1.94	0.21	325.35	34.10	12.71	548.93	10604.73	7762.25	7494.50	7422.71	10687.30	8951.30	295.09	410.02	336.93
45.59	2.15	0.24	332.97	34.04	12.71	541.76	10279.69	7535.14	7277.95	7207.66	10336.06	8693.53	295.09	394.97	343.53
48.15	3.38	0.41	338.99	33.69	12.71	539.93	10196.78	7477.11	7222.60	7152.70	10246.67	8627.64	295.09	377.48	360.02
48.18	3.77	0.47	337.91	33.58	12.71	538.04	10111.45	7417.36	7165.59	7096.09	10154.77	8559.77	295.09	369.73	357.35
46.54	3.05	0.37	333.86	33.78	12.71	536.98	10068.05	7387.26	7136.94	7067.63	10107.39	8525.69	294.98	376.46	343.77
44.03	3.24	0.40	323.83	33.72	12.71	535.59	10005.42	7343.35	7095.05	7026.03	10040.02	8475.80	294.98	371.89	323.36
43.81	3.03	0.37	323.63	33.78	12.71	537.15	10077.69	7394.16	7143.57	7074.21	10117.42	8533.59	294.93	377.06	323.95
40.92	2.72	0.33	313.58	33.86	12.71	541.37	10270.56	7529.37	7272.61	7202.33	10324.86	8687.23	294.87	387.82	308.06
38.61	2.05	0.24	306.84	34.05	12.71	540.54	10230.75	7501.36	7245.85	7175.76	10282.28	8655.36	294.93	394.10	289.60
38.09	2.61	0.32	303.22	33.88	12.71	540.82	10241.20	7508.51	7252.63	7182.51	10293.88	8663.42	294.98	388.00	285.96
36.69	1.99	0.23	299.77	34.06	12.71	542.98	10343.48	7580.38	7321.26	7250.64	10403.54	8745.14	294.87	399.12	278.12
34.55	1.94	0.23	291.82	34.07	12.71	544.09	10385.35	7609.03	7348.42	7277.64	10450.10	8777.42	295.09	401.33	262.86

SUMS					AVERAGE	SUMS						
822452.49	543222.00	333419.01	759103.30	292233.65	6069.56	72675.70	12638.79	60036.92	154455.33	12656.68	914.39	61.06
Energy Losses (kJ/kg of Dry Fuel) Flue Gas Constituent					Total Loss Rate	Total Loss	Chemical Loss 1	Sensible and Latent Loss	Total Output	Chem Loss 2	Grams Produced	
CO	N_2	CH_4	H_2O Comb	H_2O Fuel MC							CO	HC
730.40	6915.35	-154.70	1736.24	632.96	11812.88	0.00	0	0.00	0	0	0.00	0.00
1189.06	11875.55	-133.46	1792.01	654.19	18713.96	3662.26	202	3460.47	214	202	22.52	-0.46
243.91	6137.04	-40.34	1983.54	728.46	10903.55	2234.44	40	2194.46	1825	40	4.76	-0.15
829.34	3127.00	304.59	1864.74	700.27	7790.80	1308.88	185	1123.60	2019	185	13.35	0.91
685.76	3440.46	238.34	1905.38	712.43	8050.75	1560.64	174	1386.87	2280	174	12.70	0.82
461.26	2692.52	187.27	2017.48	751.80	7022.56	1127.96	100	1027.64	2054	100	7.01	0.53
1192.40	2619.20	490.98	1853.48	704.61	7678.93	822.25	175	647.02	1299	175	12.22	0.93
592.66	2655.24	213.22	1858.10	693.64	6846.27	707.81	81	626.68	1340	81	5.88	0.39
661.53	2633.16	237.58	1832.62	685.22	6867.42	659.29	84	575.09	1243	84	6.10	0.40
565.89	2572.15	195.90	1832.66	683.38	6650.73	626.21	70	556.22	1239	70	5.12	0.33
425.69	2531.82	135.60	1841.42	683.97	6411.85	591.88	51	541.34	1237	51	3.78	0.22
611.24	2587.89	212.68	1823.05	680.55	6716.69	632.42	76	556.68	1233	76	5.54	0.36
712.67	2556.21	257.99	1813.25	678.89	6807.76	666.13	93	573.36	1272	93	6.71	0.45
503.25	2450.33	171.34	1828.99	680.93	6400.80	626.31	64	561.88	1312	64	4.74	0.30
364.54	2428.57	111.71	1840.20	682.46	6191.98	583.01	44	539.27	1282	44	3.30	0.19
346.19	2442.53	102.62	1840.67	682.23	6182.83	559.32	40	519.71	1233	40	3.01	0.16
246.92	2502.33	54.05	1842.86	680.90	6113.12	519.16	25	494.23	1163	25	2.02	0.08
604.44	2552.98	205.54	1808.87	674.94	6633.19	563.32	67	496.10	1119	67	4.95	0.31
944.93	2497.10	358.69	1785.27	672.86	7020.77	622.16	113	509.18	1133	113	8.07	0.56
573.63	2422.68	200.22	1814.49	676.81	6440.61	582.64	68	514.24	1209	68	5.00	0.32
432.01	2447.65	136.99	1825.87	678.26	6284.95	568.56	50	518.30	1224	50	3.76	0.22
403.05	2458.31	124.07	1828.97	678.84	6261.53	554.88	46	509.28	1201	46	3.44	0.20
519.25	2466.44	176.14	1823.96	679.27	6433.48	546.36	58	488.70	1136	58	4.24	0.27
340.28	2433.80	96.99	1831.69	678.66	6144.09	510.44	35	474.98	1135	35	2.72	0.14
487.22	2439.49	161.46	1821.18	677.59	6346.93	527.29	53	474.66	1118	53	3.90	0.24
448.22	2447.32	141.72	1818.52	675.73	6292.77	522.80	48	474.91	1123	48	3.59	0.21
562.46	2414.98	191.35	1804.47	672.68	6392.88	519.31	60	459.44	1090	60	4.40	0.28
624.13	2399.95	216.19	1792.76	669.40	6440.94	487.54	62	425.31	1012	62	4.56	0.29
980.20	2424.66	373.55	1772.13	668.57	6956.62	539.42	103	436.67	997	103	7.33	0.51
1095.02	2397.83	425.49	1763.78	667.70	7076.90	548.74	115	433.31	987	115	8.19	0.59
885.21	2359.59	332.99	1773.42	667.27	6738.72	510.08	90	419.80	989	90	6.47	0.45
940.37	2275.22	361.60	1768.40	666.64	6707.47	520.10	99	421.24	1016	99	7.04	0.50
878.10	2289.43	333.71	1773.60	667.37	6643.23	515.12	92	423.12	1021	92	6.57	0.46
789.93	2258.53	297.94	1782.99	669.32	6494.60	515.58	85	431.06	1057	85	6.05	0.42
596.05	2201.84	213.63	1791.76	668.92	6155.90	488.69	63	425.79	1084	63	4.56	0.30
756.87	2177.88	287.10	1783.45	669.02	6348.28	492.25	79	413.02	1044	79	5.66	0.40
579.04	2173.52	208.67	1795.40	670.06	6103.92	473.30	60	413.54	1063	60	4.33	0.29
563.61	2123.78	204.78	1796.96	670.47	6023.78	478.21	60	418.53	1094	60	4.31	0.29

ASTM E2515 - Glass Fiber Filters

Date:	2/2/24	2/5/24	2/6/24	2/7/24			
Time:	13:00	10:00	9:00	9:00			
	Weight 1	Weight 2	Weigth 3	Weight 4	Initial	Project	Run
G00869	229.4	229.2	–	–	JB	24-253	#1
G00870	230.2	230.2	–	–	JB	↓	↓
G00871	230.6	230.8	–	–	JB	24-253	#2
G00872	231.2	231.1	–	–	JB	↓	↓
G00873	231.4	231.0	231.3	231.2	JB	↓	↓
G00874	230.8	230.7	–	–	JB	↓	↓
G00875	230.8	230.7	–	–	JB	24-255	#1
G00876	231.3	231.1	–	–	JB	↓	↓
G00877	233.9	233.8	–	–	JB	↓	↓
G00878	230.9	230.9	–	–	JB	↓	↓
G00879	232.9	232.8	–	–	JB	24-255	#2
G00880	228.9	228.8	–	–	JB	↓	↓
G00881	233.1	233.1	–	–	JB	↓	↓
G00882	230.8	230.6	–	–	JB	↓	↓
G00883	231.0	231.0	–	–	JB	24-255	#3
G00884	230.6	230.4	–	–	JB	↓	↓

Date:	2/2/24	2/19/24					
Time:	13:00	8:30					
	Weight 1	Weight 2	Weigth 3	Weight 4	Initial	Project	Run
G00885	232.1	232.1	–	–	JB	24-255	#3
G00886	232.0	231.8	–	–	JB	↓	↓
G00887	232.2	232.3	–	–	JB	24-264	#1
G00888	230.7	230.6	–	–	JB	↓	↓
G00889	230.2	230.2	–	–	JB	↓	↓
G00890	231.1	231.2	–	–	JB	↓	↓
G00891	230.8	230.7	–	–	JB	24-264	#2
G00892	231.7	231.6	–	–	JB	↓	↓
G00893	228.8	228.7	–	–	JB	↓	↓
G00894	229.8	229.8	–	–	JB	↓	↓
G00895	234.4	234.4	–	–	JB	24-264	#3
G00896	228.2	228.2	–	–	JB	↓	↓
G00897	230.9	231.0	–	–	JB	↓	↓
G00898	231.8	231.8	–	–	JB	↓	↓
G00899	231.4	231.5	–	–	JB	24-264	#4
G00900	230.8	230.8	–	–	JB	↓	↓

ASTM E2515 - Probe Samples 11-20

Date:	2/1/24	2/2/24	2/5/24	2/6/24			
Time:	14:00	13:00	10:00	9:00			
	Weight 1	Weight 2	Weigth 3	Weight 4	Initial	Project	Run
11A	116865.9	116865.3	116865.5	—	SB	24-253	#1
11B	117339.4	117338.9	117339.0	—	SB		
11C	116185.5	116184.8	116185.0	—	SB		
12A	116705.7	116705.4	116705.7	116705.7	SB	24-253	#2
12B	117772.0	117771.7	117771.9	—	SB		
12C	117171.5	117171.2	117171.4	—	SB		
13A	117315.0	117314.6	117315.0	117314.9	SB	24-255	#1
13B	116941.5	116941.1	116941.4	116941.3	SB		
13C	115650.1	115649.9	—	—	SB		
14A	116633.2	116632.8	116633.2	116633.0	SB	24-255	#2
14B	116619.1	116618.9	—	—	SB		
14C	116530.3	116530.0	116530.3	116530.2	SB		
15A	117239.5	117239.2	117239.5	117239.3	SB	24-255	#3
15B	116752.7	116752.3	116752.5	—	SB		
15C	116847.2	116846.8	116847.2	116847.1	SB		

Date:	2/19/24	2/20/24	2/21/24				
Time:	8:20	15:30	9:00				
	Weight 1	Weight 2	Weigth 3	Weight 4	Initial	Project	Run
16A	116378.8	116378.5	116378.4	—	SB	24-264	#1
16B	115861.2	115861.0	—	—	SB		
16C	114147.5	114147.3	—	—	SB		
17A	116810.3	116810.1	—	—	SB	24-264	#2
17B	117140.5	117140.2	117140.3	—	SB		
17C	113141.3	113141.1	—	—	SB		
18A	117499.8	117499.7	—	—	SB	24-264	#3
18B	117332.2	117331.9	117331.9	—	SB		
18C	114335.1	114334.9	—	—	SB		
19A	117026.2	117026.2	—	—	SB	24-264	#4
19B	117013.4	117013.3	—	—	SB		
19C	114231.2	114231.1	—	—	SB		
20A	115626.9	115626.5	115626.4	—	SB	24-264	#5
20B	115966.3	115966.1	—	—	SB		
20C	113775.3	113775.3	—	—	SB		

ASTM E2515 - O-Ring Samples 11-20

Date:	2/1/24	2/2/24					
Time:	14:00	13:00					
	Weight 1	Weight 2	Weigth 3	Weight 4	Initial	Project	Run
11A	3423.7	3423.8	–	–	SB	24-253	#1
11B	4233.6	4233.6	–	–	SB		
11C	3588.6	3588.6	–	–	SB		
12A	3586.4	3586.3	–	–	SB	24-253	#2
12B	3551.1	3551.0	–	–	SB		
12C	3616.5	3616.5	–	–	SB		
13A	3596.9	3596.8	–	–	SB	24-255	#1
13B	3642.7	3642.8	–	–	SB		
13C	4410.0	4410.0	–	–	SB		
14A	3367.3	3367.1	–	–	SB	24-255	#2
14B	3342.1	3342.1	–	–	SB		
14C	3445.3	3445.2	–	–	SB		
15A	3570.1	3570.0	–	–	SB	24-255	#3
15B	3571.2	3571.2	–	–	SB		
15C	3397.2	3397.1	–	–	SB		

Date:	2/19/24 8:30	2/20/24					
Time:	8:30	9:00					
	Weight 1	Weight 2	Weigth 3	Weight 4	Initial	Project	Run
16A	3573.2	3573.1	–	–	SB	24-264	#1
16B	3638.4	3638.4	–	–	SB		
16C	3601.6	3601.7	–	–	SB		
17A	3612.9	3612.9	–	–	SB	24-264	#2
17B	3569.0	3569.1	–	–	SB		
17C	3596.7	3596.9	–	–	SB		
18A	3602.5	3602.5	–	–	SB	24-264	#3
18B	~~3528.1~~ 3545.8	3545.7	–	–	SB		
18C	3528.1	3528.2	–	–	SB		
19A	3585.5	3585.4	–	–	SB	24-264	#4
19B	3632.6	3632.8	–	–	SB		
19C	3614.7	3614.7	–	–	SB		
20A	3558.7	3558.9	–	–	SB	24-264	#5
20B	3614.2	3614.3	–	–	SB		
20C	3610.5	3610.5	–	–	SB		

Appendix B: Labels & Manuals

Bar code - 1st character must represent the letter S

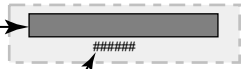

Serial Number

Bar Code Label
1.5 in. x .400 in.

Bar code - 1st character must represent the letter P

Part Number

c UL us LISTED
UL 127-2011, CAN/ULC-S610

PFS c us
F24-253

Model:
PIONEER-III-ARC
PIONEER-III-REC
EPA Certified Fireplace

HEARTH & HOME technologies
7571 - 215th Street West, Lakeville, MN 55044
www.fireplaces.com

SERIAL NO./NUMÉRO DE SÉRIE
MP182

FIRE CHAMBER INTENDED FOR USE WITH HEARTH & HOME TECHNOLOGIES LISTED FIREPLACE PARTS. SEE INSTALLATION AND OPERATING INSTRUCTIONS FOR THIS MODEL. REPLACE GLASS ONLY WITH CERAMIC.

DO NOT OVERFIRE. USE ONLY: SOLID WOOD FUEL. DO NOT USE A FIREPLACE INSERT OR OTHER PRODUCTS NOT SPECIFIED FOR USE WITH THIS PRODUCT.

WARNING! THIS FIREPLACE HAS NOT BEEN TESTED WITH AN UNVENTED GAS LOG SET. TO REDUCE THE RISK OF FIRE OR INJURY, DO NOT INSTALL AN UNVENTED GAS LOG SET INTO FIREPLACE.

DO NOT USE GRATE OR ELEVATE FIRE. BUILD WOOD FIRE DIRECTLY ON FIREBRICK.

WARNING! TO AVOID THE RISK OF DAMAGING FIREPLACE MATERIALS AND INCREASING THE RISK OF SPREADING A FIRE DO NOT USE THE FIREPLACE TO COOK OR WARM FOOD.

INSTALL AND USE ONLY IN ACCORDANCE WITH MANUFACTURER'S INSTALLATION, VENTING AND OPERATING INSTRUCTIONS. ANY AREA INCORPORATING WARM OR COLD AIR DUCTS SHALL BE ENCLOSED IN ACCORDANCE WITH THE MANUFACTURER'S INSTALLATION INSTRUCTIONS. CONTACT YOUR LOCAL BUILDING OR FIRE OFFICIALS OR AUTHORITY HAVING JURISDICTION ABOUT RESTRICTIONS, INSTALLATION INSPECTION AND PERMITS REQUIRED IN YOUR AREA. COMPONENTS REQUIRED FOR INSTALLATION: HTI SLSERIES PIPE OR DURA PLUS SYSTEM, TERMINATION CAP, HEARTH EXTENSION AND REQUIRED ACCESSORY CHIMNEY AIR KIT PART CAK4A. DO NOT CONNECT THIS UNIT TO A CHIMNEY SERVING ANOTHER APPLIANCE. DANGER: RISK OF ELECTRICAL SHOCK. DISCONNECT POWER SUPPLY BEFORE SERVICING. ELECTRICAL RATING: 115 VAC <3.0 AMPS 60 HZ MUST PROVIDE A SOURCE OF AIR TO PREVENT AIR STARVATION FROM COMBUSTION WHICH COULD RESULT IN HIGH LEVELS OF CARBON MONOXIDE.

FIREPLACE ALSO FOR USE IN MANUFACTURED/MOBILE HOMES WITH SOLID FUEL ONLY YES [X] NO [ ]

FIREPLACE FOR USE OUTDOORS YES [ ] NO [X]

CLEARANCE TO COMBUSTIBLES: DEGAGEMENT DES MATEIAUX COMBUSTIBLES: **CHIMNEY/CHEMINÉE 2 IN. MIN. 51 MM**

	FIREBOX/ FOYER	
BACK	1	IN. MIN.
DOS	25	MM MIN.
SIDE	1-1/2	IN. MIN.
COTÉ	38	MM MIN.

IF INSTALLATION OR OPERATING INSTRUCTIONS ARE MISSING CONTACT: HEARTH & HOME TECHNOLOGIES, 7571 215th Street West, Lakeville, MN 55044

THE HEARTH EXTENSION MUST BE INSTALLED ACCORDING TO THE INSTALLATION INSTRUCTIONS.

This wood heater needs periodic inspection and repair for proper operation. Consult owner's manual for further information. It is against federal regulations to operate this wood heater in a manner inconsistent with the operating instructions in the owner's manual.

DO NOT REMOVE THIS LABEL **Made in U.S.A. of US and imported parts**

Mfg by: HEARTH & HOME technologies

2024 2025 2026 2027 2028 2029 Jan Feb Mar Apr May June July Aug Sept Oct Nov Dec

U.S. ENVIRONMENTAL PROTECTION AGENCY Certified to comply with 2020 particulate emission standards for single burn rate heaters.
This single burn rate wood heater is not approved for use with a flue damper.
Emission test result of 1.3 g/hr were obtained using crib wood and following EPA Method 28R, ASTM E2515, ASTM E2780 and CSA B415.1.

4182-990F

NOTES:
1. Material: Metal, double sided
2. Copy: Black
3. Background: Silver
4. Size: 8" w x 5.5" h
5. Starting Serial No. MP182000001
6. Bar code part number should read P4182-990

REV	REVISIONS	ECO #	DATE	BY
F	Updated to PIONEER-III-ARC/REC, removed model box	100203	5/24	DLH
E	Logo: Hearth&Home was Quadra-Fire	100203	3/24	DLH
D	Updated EPA text, moved dates & HHT logo	100203	3/24	DLH
C	Updates to PFS, dates, Certified..., www.fireplaces.com	100203	2/24	DLH

UNLESS OTHERWISE SPECIFIED: TOLERANCE - (2) PLACE DEC : ± 0.03 (3) PLACE DEC: ± 0.005 ANGLE: ± 2° FRACTION: ± 1/16
OUTSIDE MATERIAL. NORMAL DIM & INSIDE MATERIAL. OUTSIDE APEX INSIDE APEX - DIMS ENCLOSED BY AN OVAL ARE CRITICAL DIMENSIONS

HEARTH & HOME technologies
Confidential property of Hearth & Home Technologies

PART NAME: **Pioneer III English Serial**
DRAWN BY: PAA | SCALE: NTS | MATERIAL:
This print is checked and controlled by the engineering departments of Hearth & Home Technologies
SHEET: 1 OF 2 | PART NUMBER: **4182-990** | REV: **F**

c UL us LISTED
UL 127-2011, CAN/ULC-S610

PFS c us
F24-253

Model:
PIONEER-III-ARC
PIONEER-III-REC
EPA Certified Fireplace

HEARTH & HOME technologies
7571 - 215th Street West, Lakeville, MN 55044
www.fireplaces.com

NE PAS surcuisson. UTILISER UNIQUEMENT: COMBUSTIBLES SOLIDES OU BOIS COTÉES APPLIANCE DE GAZ DÉCORATIF. NE PAS UTILISER UN INSERT CHEMINEE OU AUTRES PRODUITS NON POUR USAGE SPÉCIFIÉ AVEC CE PRODUIT.

AVERTISSEMENT! CE FOYER N'A PAS ÉTÉ TESTÉ AVEC UN JOURNAL DE GAZ NON APPROUVÉ. POUR RÉDUIRE LES RISQUES D'INCENDIE OU DE BLESSURES, N'INSTALLEZ PAS D'ENREGISTREMENT DE GAZ NON CONTINU AU FOYER.

NE PAS UTILISER DE GRATE OU D'ÉLEVER UN FEU. CONSTRUISEZ UN FEU DE BOIS DIRECTEMENT SUR FIREBRICK.

ATTENTION! POUR ÉVITER LE RISQUE DE MATÉRIAUX ENDOMMAGER FOYER ET AUGMENTER LE RISQUE DE DIFFUSER UN INCENDIE NE PAS UTILISER LA FOYER À CHAUD DES ALIMENTS OU COOK.

INSTALLEZ ET UTILISEZ EN ACCORD AVEC LES INSTRUCTIONS D'INSTALLATION ET D'OPÉRATION DU FABRICANT. LES ZONES DE L'APPAREIL COMPORTANT DES CONDUITS D'AIR CHAUD ET FROID DOIVENT ÊTRE ENFERMÉES SELON LES INSTRUCTIONS D'INSTALLATION DU FABRICANT.CONTACTEZ LE BUREAU DE LA CONSTRUCTION OU LE BUREAU DES INCENDIES AU SUJET DES RESTRICTIONS ET DES INSPECTIONS D'INSTALLATION DANS VOTRE VOISINAGE.

LES PIÈCES EXIGÉES POUR L'INSTALLATION: LES SÉRIES DE CONDUITS HEARTH & HOME TECHNOLOGIES SL, CHAPEAU DE TERMINAISON, EXTENSION DE PROTECTION DE SOL ET LE KIT ACCESSOIRE DE CHEMINÉE CAK4A.NE PAS CONNECTER CET APPAREIL À UNE CHEMINÉE SERVANT UN AUTRE APPAREIL.DANGER: IL Y A RISQUE DE DÉCHARGE ÉLECTRIQUE. DÉCONNECTEZ LE FIL ÉLECTRIQUE DE LA PRISE DE CONTACT AVANT LE SERVICE. PUISSANCE ÉLECTRIQUE: 115 VAC, ,3.0T AMPS, 60 HZ. DOIT FOURNIR UNE SOURCE D'AIR AFIN DE PRÉVENIR L'INANITION D'AIR DURANT LA COMBUSTION CE QUI POURRAIT CONDUIRE À DE HAUTS NIVEAUX DE MONOXYDE DE CARBONE.

SI DES INSTRUCTIONS D'INSTALLATION OU D'UTILISATION SONT MANQUANTES, CONTACTEZ:
HEARTH & HOME TECHNOLOGIES,
7571 215th Street West, Lakeville, MN 55044

LA PROTECTION DE SOL DOIT ÊTRE INSTALLÉE SELON LES INSTRUCTIONS D'INSTALLATION

Cet appareil de chauffage au bois doit être inspecté et réparé périodiquement pour fonctionner correctement. Consultez le manuel du propriétaire pour plus d'informations. Il est contraire à la réglementation fédérale d'utiliser ce poêle à bois d'une manière non conforme aux instructions d'utilisation du manuel du propriétaire.

NE PAS ENLEVER L'ÉTIQUETTE

Fabriqué aux États-Unis-d'Amérique par des pièces d'origine américaine et pièces importées.

Mfg by: HEARTH & HOME technologies

4182-990F

NOTES:
1. Material: Metal, double sided
2. Copy: Black
3. Background: Silver
4. Size: 8" w x 5.5" h

REV	REVISIONS	ECO #	DATE	BY
F	Updated to PIONEER-III-ARC/REC, removed model box	100203	5/24	DLH
E	Logo: Hearth&Home was Quadra-Fire	100203	3/24	DLH
D	Updated EPA text, moved dates & HHT logo	100203	2/24	DLH
C	Updates to PFS, dates, Certified..., www.fireplaces.com	100203	2/24	DLH

UNLESS OTHERWISE SPECIFIED: TOLERANCE - (2) PLACE DEC : ± 0.03 (3) PLACE DEC: ± 0.005 ANGLE: ± 2° FRACTION: ± 1/16
OUTSIDE MATERIAL. NORMAL DIM & INSIDE MATERIAL. OUTSIDE APEX INSIDE APEX - DIMS ENCLOSED BY AN OVAL ARE CRITICAL DIMENSIONS

HEARTH & HOME technologies
Confidential property of Hearth & Home Technologies

PART NAME: **Pioneer III French Serial**
DRAWN BY: PAA
SCALE: NTS
MATERIAL:
This print is checked and controlled by the engineering departments of Hearth & Home Technologies
SHEET: 2 OF 2
PART NUMBER: **4182-990**
REV: **F**

Owner's Manual

Care and Operation

Pour demander un exemplaire en français de ce Manuel du propriétaire, visitez www.fireplaces.com/translations

INSTALLER: Leave this manual with party responsible for use and operation.
OWNER: Retain this manual for future reference.
***NOTICE: DO NOT** discard this manual!*

HEARTH & HOME technologies

Model(s):

PIONEER-III-ARC
PIONEER-III-REC

C UL US LISTED

PFS C US F24-253

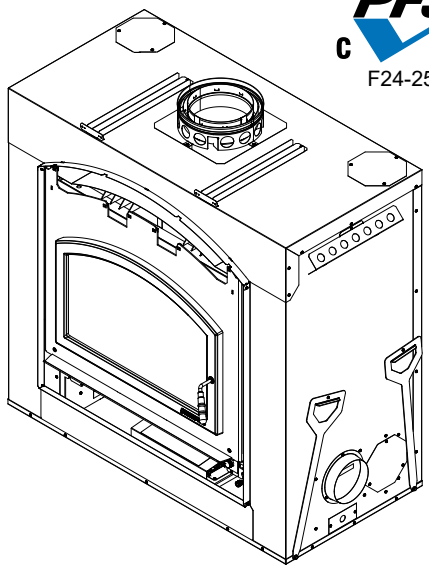

HEAT & GLO
heatilator
MAJESTIC

EPA CERTIFIED WOODBURNING FIREPLACE

Installation and service of this appliance should be performed by qualified personnel. Hearth & Home Technologies recomends HHT Factory Trained or NFI certified professionals.

hearthED FACTORY TRAINING Fuel Your Fire

NFI NATIONAL FIREPLACE INSTITUTE A CERTIFICATION AGENCY

⚠WARNING: If the information in these instructions is not followed exactly, a fire or explosion may result causing property damage, personal injury, or death.

- **DO NOT** store or use gasoline or other flammable vapors and liquids in the vicinity of this or any other appliance.
- **DO NOT** overfire. Overfiring will void your warranty.
- Comply with all minimum clearances to combustibles as specified. Failure to comply may cause house fire.

⚠ WARNING

HOT SURFACES!
Glass and other surfaces are hot during operation AND cool down.

Hot glass will cause burns.
- **DO NOT** touch glass until it is cooled
- NEVER allow children to touch glass
- Keep children away

- CAREFULLY SUPERVISE children in same room as fireplace.
- Alert children and adults to hazards of high temperatures.

High temperatures may ignite clothing or other flammable materials.
- Keep clothing, furniture, draperies and other flammable materials away.

⚠ WARNING

Fire Risk.

For use with solid wood fuel only.
Other fuels may overfire and generate poisonous gases (i.e. carbon monoxide).

Safety Alert Key:

- ***DANGER!*** Indicates a hazardous situation which, if not avoided will result in death or serious injury.
- ***WARNING!*** Indicates a hazardous situation which, if not avoided could result in death or serious injury.
- ***CAUTION!*** Indicates a hazardous situation which, if not avoided, could result in minor or moderate injury.
- ***NOTICE:*** Indicates practices which may cause damage to the fireplace or to property.

Table of Contents

1 Welcome

▶ A. Congratulations 3
B. LIMITED LIFETIME WARRANTY 4

2 Product Specific Information

A. Appliance Safety Certification 6
▶ B. Appliance Emissions Certification 6
▶ C. BTU & Efficiency Specifications 6
D. Mobile Home Approved 6
E. Glass Specifications 6

3 Important Safety and Operating Information

A. Fireplace Safety 7
1. Clear Space 7
2. Firebrick 8
3. Baffle and Blanket 8
4. Over-Firing Your Fireplace 8
5. Chimney Fire 8
B. General Operating Parts 9
▶ 1. Smart Burn Technology System Activation 10
2. Outside Air 11
3. Glass Doors 11
4. Convection Fan Operation 11
5. Battery Holder 11
C. Fuel 12
1. Hardwood vs. Softwood 13
2. Moisture Content 13
3. Seasoning 13
4. Storing Wood 14
5. Burning Process 14
6. Dirty Glass 14
7. Creosote Formation 14
8. Opacity 14
D. First Fire 14
▶ E. Lighting Instructions 15
F. Manual Override of Air Control 17
G. Frequently Asked Questions 18
▶ H. Quick Start Guide 19

4 Maintenance and Service

A. Maintenance Tasks-Homeowners 20
1. Chimney Inspection 20
2. Creosote (Chimney) Cleaning 21
3. Care and Cleaning of Plated Surfaces 22
4. Glass Door 22
5. Glass Cleaning 22
6. Door Gasket 22
7. Ash Removal 22
8. Baffle and Blanket 22
9. Firebrick 22
B. Replacement Maintenance 23
1. Glass Replacement 23
2. Tighten or Adjust Door Latch 23
3. Manifold Tubes Removal and Replacement 23
4. Door Handle Assembly 23
5. Firebrick Replacement 23
6. Thermocouple Replacement 25
7. Baffle Removal and Installation 26
8. Fan Replacement 26

5 Troubleshooting

A. FAQs 28
▶ B. Troubleshooting Table 30

6 Reference Materials

▶ A. Service Parts 33
B. Contact Information 37

1 Welcome

Read this manual before installing or operating this fireplace.
Please retain this owner's manual for future references.

A. Congratulations

Congratulations on selecting a Hearth & Home Technologies wood burning fireplace. The Hearth & Home Technologies fireplace you have selected is designed to provide the utmost in safety, reliability, and efficiency.

As the owner of a new fireplace, you'll want to read and carefully follow all of the instructions contained in this Owner's Manual. Pay special attention to all Cautions and Warnings.

This Owner's Manual should be retained for future reference. We suggest that you keep it with your other important documents and product manuals.

Your new Hearth & Home Technologies wood burning fireplace will give you years of durable use and trouble-free enjoyment. Welcome to the Hearth & Home Technologies family of fireplace products!

Hearth & Home Technologies is a registered trademark of Hearth & Home Technologies.

Local Dealer Information

DEALER: *Fill in your name, address, phone and email information here and fireplace information below.*

Dealer Name: _____

Address: _____

_____

Phone: _____

Email: _____

Fireplace Information:

Brand: _____ Model Name: _____

Serial Number: _____ Date Installed: _____

Listing Label Information/Location

The model information regarding your specific fireplace can be found on the rating plate usually located in the control area of the fireplace.

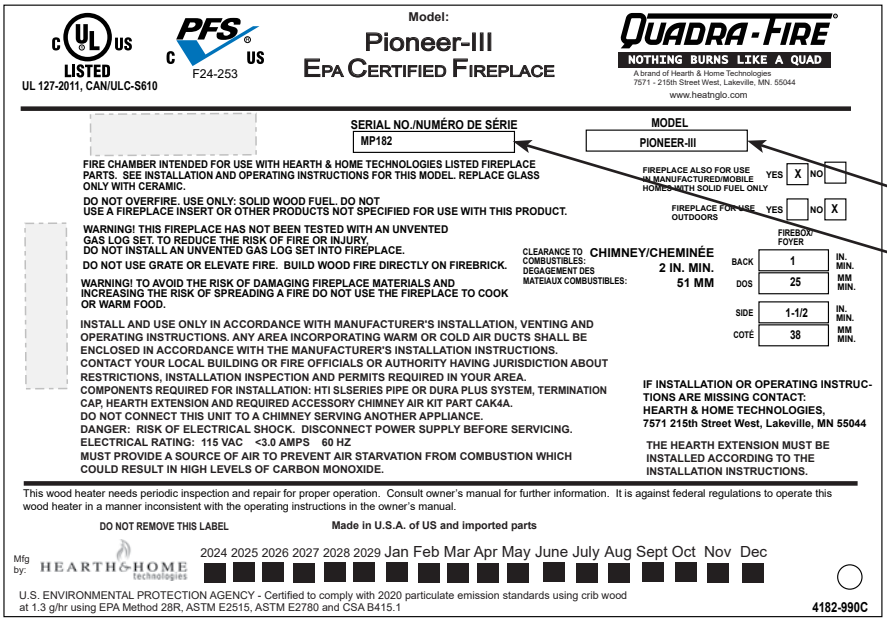

B. LIMITED LIFETIME WARRANTY

Hearth & Home Technologies LLC

LIMITED WARRANTY

Hearth & Home Technologies LLC ("HHT") extends the following warranty for HHT gas, wood, pellet and electric hearth appliances (each a "Product" and collectively, the "Product(s)") and certain component parts set forth in the table below ("Component Part(s)") that are purchased from a HHT authorized dealer or distributor.

WARRANTY COVERAGE:

HHT warrants that the Products and their Component Parts will be free from defects in materials and workmanship for the applicable period of Warranty coverage set forth in the table below ("Warranty Period"). If a Product or Component Parts are found to be defective in materials or workmanship during the applicable Warranty Period, HHT will, at our discretion, repair the applicable Component Part(s), replace the applicable Component Part(s), or refund the purchase price of the applicable Product(s). The maximum amount recoverable under this Warranty is limited to the purchase price of the Product. This Warranty is transferable from the original purchaser to subsequent owners, but the Warranty Period will not be extended in duration or expanded in coverage for any such transfer. This Warranty is subject to conditions, exclusions, and limitations as described below.

WARRANTY PERIOD:

Warranty coverage begins at the date of installation. In the case of new home constructions, Warranty coverage begins six months after invoice of the final sale of the Product(s) by an independent, authorized HHT dealer or distributor. However, the Warranty coverage shall commence no later than 24 months following the date of Product shipment from HHT, regardless of the installation or purchase date.

Warranty Period		HHT Manufactured Appliances and Venting				
Component Parts	Labor	Gas	Pellet	Wood	Electric	Component Parts Covered by this Warranty
1 Year		X	X	X		All parts including handles, external enameled components and other material except as covered by Warranty Conditions, Warranty Exclusions, and Warranty Limitations listed
2 Years					X	All parts except as covered by Warranty Conditions, Warranty Exclusions, and Warranty Limitations listed
			X	X		Glass, Electrical components limited to heating element/igniters, Top feed auger assembly, Blowers, Junction Box, Remotes/Wall switches, linear actuator, power cord, vacuum switch, snap disc, wire harnesses and thermocouple
		X				Electrical components limited to modules, remotes/wall switches, valves, pilots, blowers, junction boxes, wire harnesses, transformers and lights (excluding light bulbs)
		X		X		Cement Refractory Panels, Glass Liner Panels
3 years			X			Firepots, burnpots, Harman mechanical feeders
5 years		X		X		Catalysts, Vented and Vent Free burners and logs
10 years	1 year	X				Burners, logs and metal/fiber refractory components of HHT manufactured fireplaces or stoves, venting due to poor workmanship
10 years	3 years		X	X		Castings, Medallions & Baffles, FlexBurn® System (engine, inner cover, access cover and fireback), Firebox and heat exchanger, HHT Chimney & Terminations, Manifolds
20 years	3 years	X				Firebox and heat exchanger
All purchased replacement parts and optional accessories						
1 Year	None	X	X	X	X	All purchased replacement parts and optional accessories

4021-645N 12/23

Page 1 of 2

WARRANTY CONDITIONS:

- Because HHT cannot control the quality of any Products sold by unauthorized sellers, this Warranty only covers Products that are purchased through an HHT authorized dealer or distributor unless otherwise prohibited by law; a list of HHT authorized dealers is available on the HHT branded websites.
- This Warranty is only valid while the applicable Product remains at the site of original installation.
- This Warranty is only valid in the country in which the HHT authorized dealer or distributor that sold the applicable Product is authorized to sell applicable Product.
- Contact your installing distributor or dealer for Warranty service. If the installing dealer or distributor is unable to provide necessary parts, contact the nearest HHT authorized dealer or supplier. Additional service fees may apply if you are seeking Warranty service from a dealer other than the dealer from whom you originally purchased the applicable Product.
- No HHT consumer should bear cost of warranty service or costs incurred while servicing warranty claims (i.e., travel, gas, or mileage) when the service is performed within the terms of this Warranty. Check with your dealer or distributor in advance for any costs to you when arranging a warranty call. Travel and shipping charges for parts are not covered by this Warranty.

WARRANTY EXCLUSIONS:

This Warranty does not cover the following:

- Changes in surface finishes as a result of normal use. As a heating appliance, some changes in color of interior and exterior surface finishes may occur. This is not a flaw and is not covered under the Warranty.
- Damage to printed, plated, or enameled surfaces caused by fingerprints, accidents, misuse, scratches, melted items or other external sources and residues left on the plated surfaces from the use of abrasive cleaners or polishes.
- Repair or replacement of parts that are subject to normal wear and tear during the Warranty Period are not covered. These parts include: paint, wood and pellet gaskets, firebricks, wood grates, flame guides, batteries and the discoloration of glass.
- Minor expansion, contraction, or movement of certain parts causing noise. These conditions are normal and complaints related to this noise are not covered by this Warranty.
- Damages resulting from: (1) failure to install, operate, or maintain the applicable Product in accordance with the installation instructions, operating instructions, and listing agent identification label furnished with the applicable Product; (2) failure to install the applicable Product in accordance with local building codes; (3) shipping or improper handling; (4) improper operation, abuse, misuse, continued operation with damaged, corroded or failed components, accident, or improperly/incorrectly performed repairs; (5) environmental conditions, inadequate ventilation, negative pressure, or drafting caused by tightly sealed constructions, insufficient make-up air supply, or handling devices such as exhaust fans or forced air furnaces or other such causes; (6) use of fuels other than those specified in the operation instructions; (7) installation or use of components not supplied with the applicable Product or any other components not expressly authorized and approved by HHT; (8) modification of the appliance not expressly authorized and approved by HHT in writing; and/or (9) interruptions or fluctuations of electrical power supply to the applicable Product.
- Non-HHT venting components, hearth connections or other accessories used in conjunction with the applicable Product.
- Any part of a pre-existing fireplace system in which an insert or a decorative gas applicable Product is installed.
- HHT's obligation under this Warranty does not extend to the Product's capability to heat the desired space. Information is provided to assist the consumer and the dealer in selecting the proper Product for the application. Consideration must be given to the Product location and configuration, environmental conditions, insulation and air tightness of the structure.

This warranty is void if:

- The applicable Product has been over-fired, operated in atmospheres contaminated by chlorine, fluorine, or other damaging chemicals. Over-firing can be identified by, but not limited to, warped plates or tubes, deformation/warping of interior cast iron structure or components, rust colored cast iron, bubbling, cracking and discoloration of steel or enamel finishes.
- The applicable Product is subjected to prolonged periods of dampness or condensation.
- There is any damage to the applicable Product due to water or weather damage which is the result of, but not limited to, improper chimney or venting installation.

LIMITATIONS OF REMEDIES AND LIABILITY:

- **EXCEPT TO THE EXTENT PROVIDED BY LAW, HHT MAKES NO EXPRESS WARRANTIES OTHER THAN THE WARRANTY SPECIFIED HEREIN. The owner's exclusive remedy and HHT's sole obligation under this Warranty or in contract, tort or otherwise, shall be limited to, at HHT's sole option, replacement of the Component Part(s), repair of the Component Part(s), or refund of the original purchase price of the applicable Product(s). In no event will HHT be liable for any incidental or consequential damages caused by defects in the applicable Product. Some States do not allow the exclusion or limitation of incidental or consequential damages, so the above limitation or exclusion may not apply to you. This Warranty gives you specific legal rights and you may also have other rights which vary from State to State. THE DURATION OF ANY IMPLIED WARRANTY IS LIMITED TO DURATION OF THE EXPRESSED WARRANTY SPECIFIED ABOVE FOR THE APPLICABLE PRODUCT. Some States do not allow limitations on how long an implied warranty lasts, so the above limitation may not apply to you.**

2 Listing and Code Approvals

A. Appliance Safety Certification

Model:	PIONEER-III-ARC & PIONEER-III-REC
Laboratory:	Underwriters Laboratories, Inc.
Report No:	Project 4788732172
Type:	Wood Fireplace
Standard:	UL 127 - 2011 and CAN/ULC S610-2018 (A1998) and (UM) 84-HUD, Manufactured Home Approved.

B. Appliance Emissions Certification

Model:	PIONEER-III-ARC & PIONEER-III-REC
Laboratory:	PFS TECO
Report No:	F24-253
Standard:	EPA Method 28R, ASTM E2515, ASTM E2780 and CSA B415.1
Can be found at: www.fireplaces.com/shopping-tools/epa-certifications	

C. BTU & Efficiency Specifications

EPA Certified Emissions:	1.3 grams per hour
*LHV Tested Efficiency:	73%
**HHV Tested Efficiency:	68%
***EPA BTU Output:	18,000/hr
****Peak BTU/Hour Output:	85,175
Vent Size:	8 inches
Firebox Size:	4.06 cubic feet
Recommended Log Length:	24 inches
Fuel	Seasoned Cord Wood less than 20% moisture
*Weighted average LHV (Low Heating Value) efficiency using crib wood and data collected during EPA emission test. LHV assumes the moisture is already in a vapor state so there is no loss in energy to vaporize.	
**Weighted average HHV (High Heating Value) efficiency using crib wood and data collected during EPA emission test. HHV includes the energy required to vaporize the water in the fuel.	
***BTU outputs based on HHV (High Heating Value) and the burn rate from EPA tests using crib wood.	
****A peak BTU out of the appliance calculated using the maximum first hour burn rate from the High EPA Test and BTU content of seasoned cordwood (8600) times the efficiency.	

PIONEER-III-ARC & PIONEER-III-REC are Certified to comply with 2020 particulate emission standards.

The PIONEER-III-ARC & PIONEER-III-REC Wood Appliances meet the U.S. ENVIRONMENTAL PROTECTION AGENCY Certified to comply with 2020 particulate emission standards using crib wood.

This wood heater needs periodic inspection and repair for proper operation. It is against federal regulations to operate this wood heater in a manner inconsistent with operating instructions in this manual.

D. Mobile Home Approved

- This appliance is approved for mobile home installations when not installed in a sleeping room and when an outside combustion air inlet is provided.
- The structural integrity of the mobile home floor, ceiling, and walls must be maintained.
- The appliance must be properly grounded to the frame of the mobile home with #8 copper ground wire.
- Outside Air Kit must be installed in a mobile home installation.

E. Glass Specifications

This fireplace is equipped with 5mm ceramic glass. Replace glass only with 5mm ceramic glass. Please contact your dealer for replacement glass.

⚠ WARNING

Fire Risk.

Hearth & Home Technologies disclaims any responsibility for, and the warranty will be voided by, the following actions:

- Installation and use of any damaged appliance.
- Modification of the appliance.
- Installation other than as instructed by Hearth & Home Technologies.
- Installation and/or use of any component part not approved by Hearth & Home Technologies.
- Operating appliance without fully assembling all components.
- Do NOT Overfire - If appliance or chimney connector glows, you are overfiring.

Any such action that may cause a fire hazard.

Improper installation, adjustment, alteration, service or maintenance can cause injury or property damage.

For assistance or additional information, consult a qualified installer, service agency or your dealer.

NOTE: Hearth & Home Technologies, manufacturer of this appliance, reserves the right to alter its products, their specifications and/or price without notice.

Hearth & Home Technologies is a registered trademark of Hearth & Home Technologies.

3 Important Safety and Operating Information

A. Fireplace Safety

Most problems are caused by improper installation and operation of the fireplace. To provide reasonable fire safety, the following should be given serious consideration:

- The fire should be supervised whenever the fireplace is in use.
- An annual inspection should be performed on the fireplace system.
- Install at least one smoke detector on each floor of your home to ensure your safety.
- Install a CO detector in the room with the fireplace.
- Install a conveniently located Class A fire extinguisher near the fireplace.
- Devise a practiced evacuation plan, consisting of at least two escape routes.
- Devise a plan to deal with a chimney fire:
  - Close all openings into the fireplace.
  - Evacuate.
  - Notify the fire department.

WARNING! Risk of Fire! *Hearth & Home Technologies disclaims any responsibility for, and the warranty and agency listing will be voided by the following actions.*

DO NOT:

- *operate damaged fireplace*
- *modify fireplace*
- *overfire*
- *install any gas log set*
- *install any component not approved by Hearth & Home Technologies*
- *install parts or components not Listed or approved*
- *operate the fireplace without fully assembling all components*

Improper installation, adjustment, alteration, service or maintenance can cause injury or property damage.

⚠ WARNING: This product and the fuels used to operate this product (wood and wood pellets), and the products of combustion of such fuels, can expose you to chemicals including carbon black, which is known to the State of California to cause cancer and carbon monoxide, which is known to the State of California to cause birth defects or other reproductive harm. For more information go to: www.P65Warnings.ca.gov.

1. Clear Space

Combustible materials must not be stored on the hearth extension. Room furnishings such as drapes, curtains, chairs or other combustibles must be at least 4 ft (1219 mm) from the open front of the fireplace.

Combustible materials are materials made of or surfaced with any of the following materials:

- Wood
- Plant fibers
- Plywood/OSB
- Compressed paper
- Plastic
- Drywall
- Any material that can ignite and burn, flame proofed or not, plastered or un-plastered.

Non-combustible materials are materials which will not ignite and burn, composed of any combination of the following:

- Steel
- Brick
- Concrete
- Glass
- Iron
- Tile
- Slate
- Plasters

WARNING! Risk of Fire! *Keep combustible materials, gasoline and other flammable vapors and liquids clear of the fireplace.*

DO NOT:

- *store flammable materials close to the fireplace*
- *use gasoline, lantern fuel, kerosene, charcoal lighter fluid or similar liquids to start or "freshen up" a fire in this fireplace.*

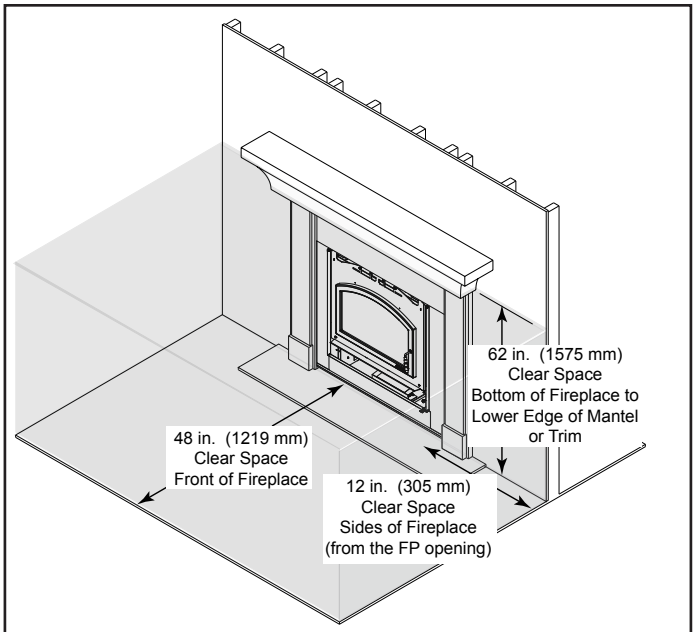

Figure 3.1 Clear Space

2. Firebrick

Your fireplace is lined with high quality firebrick, which has exceptional insulating properties.

Do not operate the fireplace without bricks. Make sure bricks are installed as shown in Section 5.

Do not use a grate; simply build a fire on the firebox floor.

3. Baffle and Blanket

Ensure correct baffle and baffle protection channel placement; replace baffle components if damaged or missing. (Please refer to Section 5.)

NOTICE: *Firebox damage due to improper baffle placement is not covered by warranty. Operate the wood burning fireplace with the baffle in the correct position only. Not doing so could result in:*

- *reduced efficiency*
- *overheating the chimney*
- *overheating the rear of the firebox*
- *poor performance*

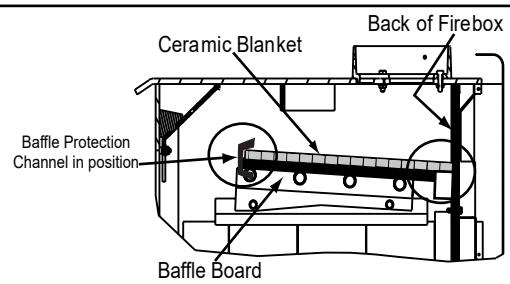

Figure 3.2 Baffle and Blanket Placement

The baffle board must be in contact with the manifold at the back of the firebox. The ceramic blanket should lay on top of the baffle board and manifold.

The baffle protection channel should be in position and cover the front of the blanket and baffle board.

4. Over-Firing Your Fireplace

DO NOT OVERFIRE THIS FIREPLACE UNIT

Attempts to achieve heat output rates that exceed design specifications can result in permanent damage to the fireplace.

To prevent over-firing your fireplace. DO NOT:

- *use flammable liquids*
- *overload with wood*
- *burn trash or large amounts of scrap lumber*
- *permit too much air to the fire (leaving the door open)*

Symptoms of over-firing may include one or more of the following:

- chimney connector or fireplace glowing
- roaring, rumbling noises
- loud cracking or banging sounds
- metal warping
- chimney fire

What to do if your fireplace is over-firing:

- Immediately close the door and air controls to reduce air supply to the fire.
- If you suspect a chimney fire, call the fire department and evacuate your house.
- Contact your local chimney professional and have your fireplace and chimney inspected for any damage.
- Do not use your fireplace until the chimney professional informs you it is safe to do so.
- Hearth & Home Technologies WILL NOT warranty fireplaces that exhibit evidence of over-firing. Evidence of over-firing includes, but is not limited to:
  - warped air tube
  - deteriorated refractory brick
  - deteriorated baffle and other interior components

5. Chimney Fire

In the event of a chimney fire:

- Have the chimney and adjacent structure inspected by qualified professionals. Hearth & Home Technologies recommends that NFI or CSIA certified professionals, or technicians under the direction of certified professionals, conduct a minimum of an **NFPA 211 Level 2** inspection of the chimney.
- Replace components of the chimney and fireplace as specified by the professionals.
- Ensure all joints are properly engaged and the chimney is properly secured.

WARNING! Risk of Fire! *A chimney fire can permanently damage your chimney system. Failure to replace damaged components and make proper repairs can cause a structure fire.*

⚠ WARNING

HOT SURFACES!

Glass and other surfaces are hot during operation AND cool down.

Hot glass will cause burns.

- **DO NOT** touch glass until it is cooled
- NEVER allow children to touch glass
- Keep children away
- CAREFULLY SUPERVISE children in same room as fireplace.
- Alert children and adults to hazards of high temperatures.

High temperatures may ignite clothing or other flammable materials.

- Keep clothing, furniture, draperies and other flammable materials away.

B. General Operating Parts

***WARNING! DO NOT** operate fireplace before reading and understanding operating instructions. Failure to operate fireplace according to operating instructions could cause fire or injury.*

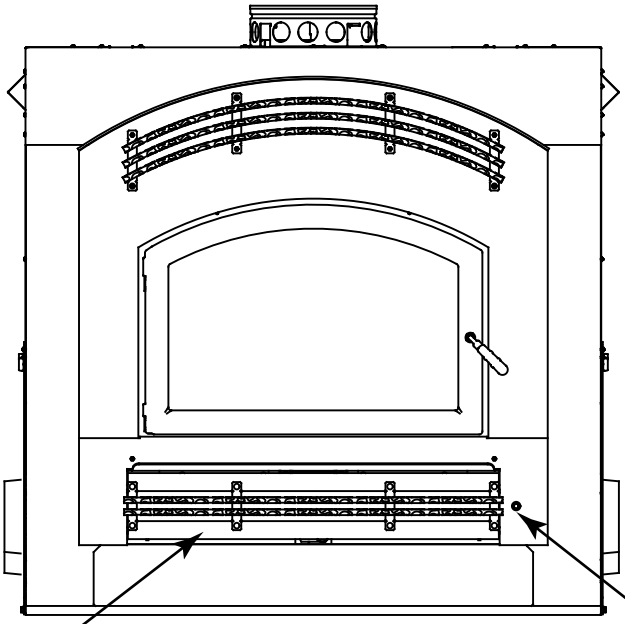

Figure 3.3 General Operating Parts

1. Smart Burn Technology (SBT)

The Smart Burn Technology system allows the homeowner to start the fire, load the appliance with wood and it will burn efficiently and clean with little interaction.

Battery Backup allows the appliance to operate without 110V but will not operate the fans.

The appliance can also be operated manually if necessary.

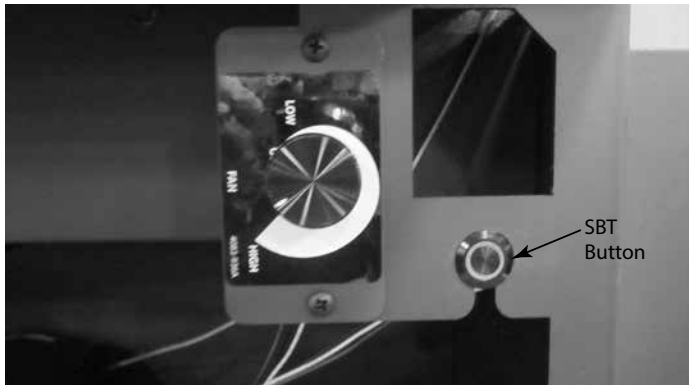

Figure 3.4

Smart Burn Technology Activation

Pushing the button will activate the appliance and open the air control to high.

Green Light

The green light illuminates when the button is pressed. This is indicating that the appliance is ready for a new fire or a reload. If neither of these events happens, the light will stay on for 2 hours and the air control will stay open. After 2 hours of no heat rise in the appliance then the light will go out and the air control closes to the zero position.

If a fire is started or the appliance is reloaded, the light will stay on through the warm up cycle.

No Light

The appliance will progress into a shutdown phase and slowly cool down and the light will turn off. Everything is working OK, but the SBT button will need to be pushed when reloading fuel.

2. Outside Air

NOTICE: *Use of outside air is required.*

CAUTION! *Outside air control handle may be warm. Allow unit to cool down before closing.*

A source of air (oxygen) is required in order for combustion to take place.

1. Before lighting the fire open the bottom access panel by lifting it up and pulling it down.
2. Locate the handle on either the left or right side. Lift the handle up and pull out to open the door (pushing the handle in will close the door).
3. Before closing the bottom access panel, make any adjustments to the convection fan (see step 6).

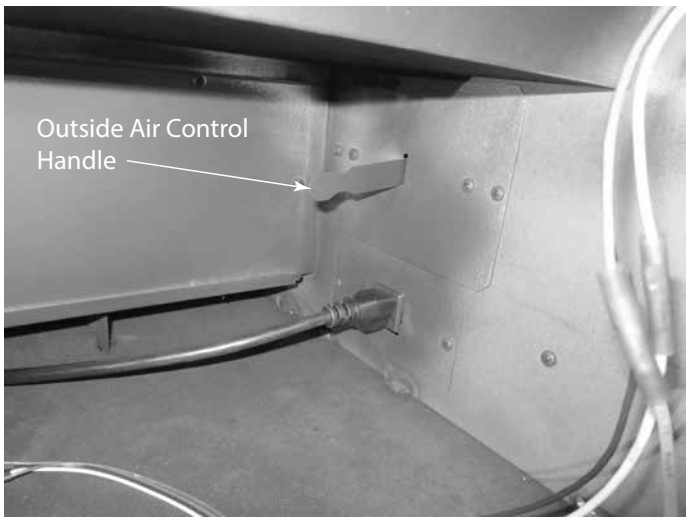

Figure 3.17 Outside Air Control Handle

3. Glass Door

This fireplace has been tested and is intended for use with the door as supplied with this fireplace.

WARNING! Risk of Fire and Smoke! *Fireplace should be operated only with doors fully open or door fully closed. If the door is left partly open, gas and flame may be drawn out of the fireplace opening.*

WARNING! Fire Risk!

- *Do not use glass door to hold burning material in fireplace.*

Glass may break or burning material may roll out.

WARNING! RISK OF *Fire! Do NOT install and or use any component not approved by Hearth & Home Technologies.*

4. Convection Fan Operation

(Located behind the lower access door)

The high fan speed can be decreased by turning the knob counterclockwise. The fan speed will vary automatically based on the temperature of the appliance. The fan can be turned off by manually turning the knob counterclockwise to the off position. See Figure 3.18.

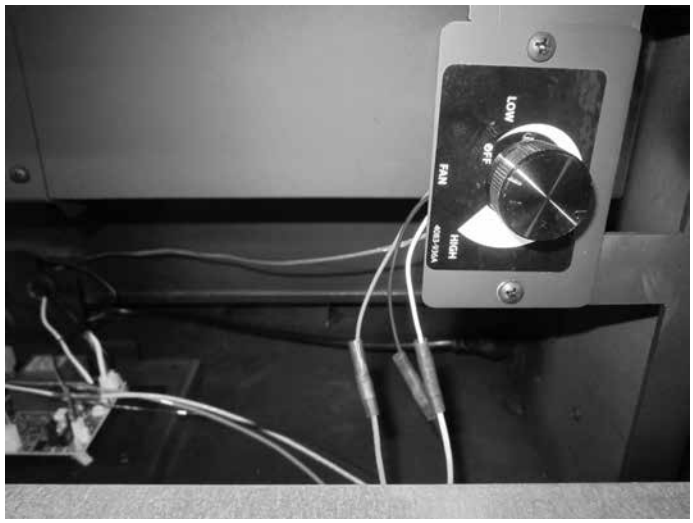

Figure 3.18 Fan Speed Control

5. Battery Holder

The battery holder holds eight (8) D cell batteries and will allow the appliance to operate without 110V. (The fan will not operate on batteries only.)

1. Open the control access door.
2. Remove the control board cover. See Figure 3.19

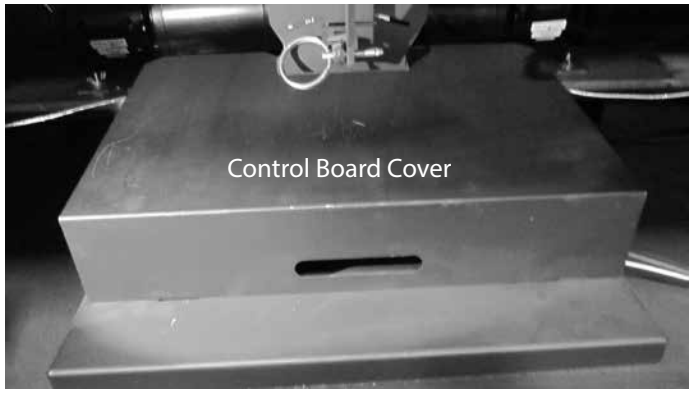

Figure 3.19 Control Board Cover

3. Install the batteries. See Figure 3.20

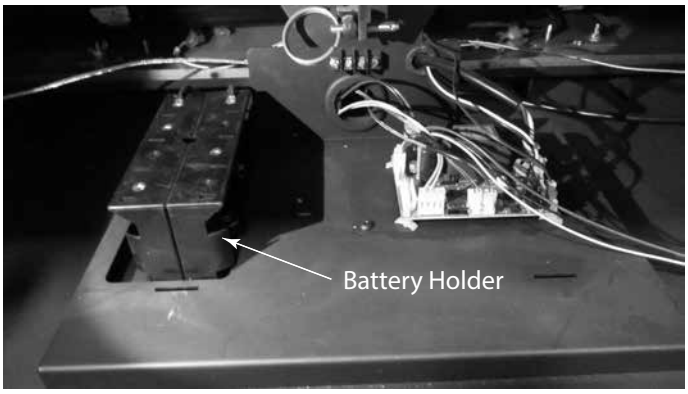

Figure 3.20 Install Batteries

4. Reverse the previous steps.

The batteries will allow the appliance to operate 30 days or more without power.

C. Fuel

WARNING! For use with solid wood fuel only.

Other fuels may overfire and generate poisonous gases (i.e. carbon monoxide).

This fireplace is designed to burn natural wood only. Higher efficiencies and lower emissions generally result when burning air dried seasoned hardwoods, as compared to softwoods or to green or freshly cut hardwoods. DO NOT BURN:

- Garbage
- Lawn clippings or yard waste
- Materials containing rubber, including tires
- Materials containing plastic
- Waste petroleum products, paints or paint thinners, or asphalt products
- Materials containing asbestos
- Construction or demolition debris
- Railroad ties or pressure-treated wood
- Manure or animal remains
- Salt water driftwood or other previously salt water saturated materials
- Unseasoned wood
- Paper products, cardboard, plywood, or particleboard. The prohibition against burning these materials does not prohibit the use of fire starters made from paper, cardboard, saw dust, wax and similar substances for the purpose of starting a fire in an affected wood heater.

  Burning these materials may result in release of toxic fumes or render the heater ineffective and cause smoke.

1. Hardwood vs. Softwood

Your fireplace's performance depends on the quality of the firewood you use. One species of wood varies very little to the other in terms of energy content. All seasoned wood contains about 8,000 BTU's per pound. Hardwoods have a greater density than softwoods; a piece of hardwood will contain about 60% more BTU's than an equal size piece of softwood. A cord of seasoned oak (hardwood) would contain about 60% more potential energy than a cord of seasoned pine (softwood).

Most softwoods are coniferous. These are trees with needle-like leaves that stay green all year and carry their seeds exposed in a cone. Examples of coniferous trees are Douglas fir, pine, spruce and cedar. Softwoods, being more porous, require less time to dry, burn faster and are easier to ignite than hardwoods. Hardwoods are deciduous trees, broadleaf trees that lose their leaves in the fall. Their seeds are usually found within a protective pod or enclosure. Some examples of deciduous trees are oak, maple, apple, and birch. However, it should be noted that there are some deciduous trees that are definitely not considered hardwoods such as poplar, aspen and alder. Hardwoods require more time to season, burn slower and are usually harder to ignite than softwoods. Obviously, you will use the type of wood that is most readily available in your area. However, if at all possible the best arrangement is to have a mix of softwood and hardwood. This way you can use the softwood for starting the fire, giving off quick heat to bring the fireplace up to operating temperature. Add the hardwood for slow, even heat and longer burn time.

WARNING! Risk of Fire!

- ***DO NOT*** *burn wet or green wood.*
- *Wet, unseasoned wood can cause accumulation of creosote.*

Soft woods	Hard woods
• Douglas Fir	• Oak
• Pine	• Maple
• Spruce	• Apple
• Cedar	• Birch
• Poplar	
• Aspen	
• Alder	

2. Moisture Content

The majority of the problems fireplace owners experience are caused by trying to burn wet, unseasoned wood. Freshly cut wood can be as much water as it is wood, having a moisture content of around 50%. Imagine a wooden bucket that weighs about 8 pounds. Fill it with a gallon of water, put it in the firebox and try to burn it. This sounds ridiculous but that is exactly what you are doing if you burn unseasoned wood. Dead wood lying on the forest floor should be considered wet, and requires full seasoning time. Standing dead wood can be considered to be about two-thirds seasoned, if cut at the dry time of the year.

Burning wet, unseasoned wood will produce less heat output because it requires energy in the form of heat to evaporate the water trapped inside. This is wasted energy that should be used for heating your home. This moisture evaporates in the form of steam which has a cooling effect in your firebox and chimney system. When combined with tar and other organic vapors from burning wood it will form creosote which condenses in the relatively cool firebox and chimney.

Even dry wood contains at least 15% moisture by weight, and should be burned hot enough to keep the chimney hot for as long as it takes to dry the wood out - about one hour. To tell if wood is dry enough to burn, check the ends of the logs. If there are cracks radiating in all directions from the center, it is dry. If your wood sizzles in the fire, even though the surface is dry, it may not be fully cured.

3. Seasoning

Seasoned firewood is nothing more than wood that is cut to size, split and air dried to a moisture content of around 20%. The time it takes to season wood varies from around nine months for soft woods to as long as eighteen months for hardwoods. The key to seasoning wood is to be sure it has been split, exposing the wet interior and increasing the surface area of each piece. A tree that was cut down a year ago and not split is likely to have almost as high a moisture content now as it did when it was cut.

To season wood:

- Cut logs to size
- Split to 6 in. (152 mm) or less
- Air dry to a moisture content of around 20%
  - Soft wood - about nine months
  - Hard wood - about eighteen months

NOTICE: *Seasoning time may vary depending on drying conditions.*

4. Storing Wood

Splitting wood before it is stored reduces drying time. The following guideline will ensure properly seasoned wood:

- Stack the wood to allow air to circulate freely around and through the woodpile.
- Elevate the woodpile off the ground to allow air circulation underneath.
- The smaller the pieces, the faster the drying process. Any piece over 6 in. (152 mm) in diameter should be split.
- Wood should be stacked so that both ends of each piece are exposed to air, since more drying occurs through the cut ends than the sides. This is true even with wood that has been split.
- Store wood under cover, such as in a shed, or covered with a tarp, plastic, tar paper, sheets of scrap plywood, etc., as uncovered wood can absorb water from rain or snow, delaying the seasoning process. Avoid covering the sides and ends completely. Doing so may trap moisture from the ground and impede air circulation.

5. Burning Process

Fire requires fuel, air and heat. If heat is robbed from the fireplace during the drying stage, the new load of wood has reduced the chances for a good clean burn. Always burn dry, seasoned firewood.

- **Kindling or 1st stage:**

  In this stage, the wood is heated to a temperature high enough to evaporate the moisture which is present in all wood. The wood will reach the boiling point of water (212°F) and will not get any hotter until the water is evaporated. This process takes heat from coals and tends to cool the fireplace.

- **2nd stage:**

  The secondary stage is when the wood gives off flammable gases which burn above the fuel with bright flames. It is very important that the flames be maintained and not allowed to go out. This will ensure the cleanest possible fire. You should close down the air to control the point where you can still maintain some flame. If the flames tend to go out, more air is necessary.

- **Final stage:**

  The final stage of burning is the charcoal stage. This occurs when the flammable gases have been mostly burned and only charcoal remains. This is a naturally clean portion of the burn. The coals burn with hot blue flames.

  It is very important to reload your fireplace while enough lively hot coals remain in order to rekindle the next load of wood.

6. Dirty Glass

A portion of the combustion air entering the firebox is deflected down over the inside of the door glass. This air flow “washes” the glass, helping to keep smoke from adhering to its surface. When operated at a low burn rate, less air will be flowing over the glass and the smoky, relatively cool condition of a low fire will cause the glass to become coated. Operating the fireplace with the burn rate air control and start-up air control all the way open for 15-20 minutes should remove the built up coating.

7. Creosote Formation and Need For Removal

When wood is burned slowly, it produces tar and other organic vapors which combine with expelled moisture to form creosote. The creosote vapors condense in the relatively cool chimney flue of a newly-started or a slow-burning fire. As a result, creosote residue accumulates on the flue lining.

When ignited, creosote creates an extremely hot fire which may damage the chimney or even destroy the house.

The chimney shall be inspected at least annually before lighting, or once every two months during heating season.

When creosote has accumulated it shall be removed to reduce the risk of a chimney fire.

8. Opacity

Opacity indicates how cleanly your fireplace is burning. Opacity is measured in percent; 100% opacity is when an object is totally obscured by the smoke column from a chimney, and 0% opacity means that no smoke column can be seen. Periodically check the opacity and burn your fireplace as nearly smoke-free as possible (goal of 0% opacity).

D. First Fire

Before lighting your first fire in the fireplace, make certain that:

- the baffle and ceramic blanket are correctly positioned, resting against the rear support
- firebrick are in place
- all labels have been removed
- all plated surfaces have been cleaned

NOTICE: *Oils can cause permanent markings on plating if not removed before the first fire.*

NOTICE: *The first three or four fires should be of moderate size to allow the oils and binders to be burned from the fireplace and the refractory and paint to cure. You may notice an industrial odor the first few fires. This is considered normal.*

E. Lighting Instructions/Establish Coal Bed

- Open outside air by opening the lower access panel and locate the outside air handle (it could be on the left or right). Lift the handle up and pull out to open. See Figure 3.21.
  Note: This may be closed only when the fireplace is not in use to prevent cold air infiltration.

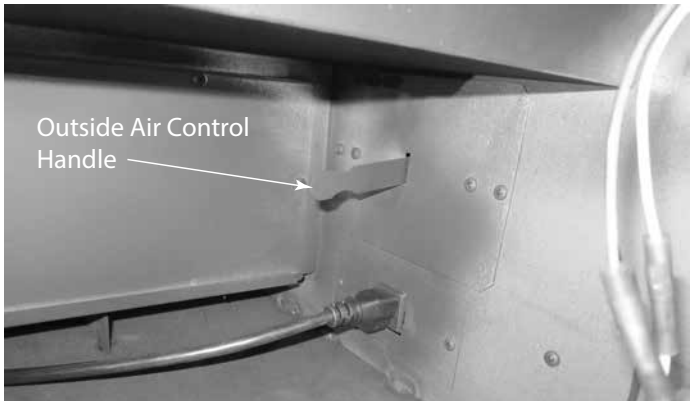

Figure 3.21 Outside Air Handle Shown on Right Side

- Push the SBT button (the air control will open and the light should illuminate green).
- Place several wads (4-5 pieces) of crumpled newspaper on the firebox floor. Add 7-8 lbs. of kindling (pieces of dry cord wood less than 1 inch in diameter) stacked on top of the paper crisscrossed. See Figure 3.22.
- Make sure that no matches or other combustibles are in the immediate area of the fireplace. Be sure the room is adequately ventilated and the flue unobstructed.
- For best results, use a hand held homeowner-type gas torch to light the paper and wood for approximately one minute.
- Leave the door slightly open 1-2 inches (see Figure 3.26) for 2-3 minutes then close the door, latching it lightly. Then push the SBT button. See Figure 3.27.

Figure 3.22 Placing Kindling

- After the flame gets established (approximately 5-6 minutes) shut and latch the door. Then push the SBT button. See Figure 3.28.
- When 1/2 to 2/3 of the kindling burns down, open the door, push the SBT button and level the firebox.
- Add 11 to 12 pounds of start-up wood (1-3 inch diameter pieces of cord wood) by stacking them in a crisscross pattern. This will allow for proper air flow.
- Leave door slightly open 1-2 inches (see Figure 3.26) for 1-3 minutes or until a good flame is present. Then close the door, latching it lightly. Then push the SBT button. See Figure 3.27.
- After the flame gets established (approximately 3-5 minutes) shut and latch the door. Then push the SBT button.
- When the kindling has burned down 1/2 to 2/3 and a good flame is still present, push the SBT button and open the door. Level the coal bed insuring that the combustion air holes are not blocked.
- Load 5-6 pieces of cord wood 24 inches long to achieve maximum firebox volume, stack 2 to 3 pieces high in the back first, then 2 to 3 pieces in the front, making sure to work the bottom pieces into the coal bed to insure solid stack once all the wood is loaded. Leave at least a 1 inch gap between the two stacks to insure good air flow around the wood. See Figures 3.22, 3.24 & 3.25 for examples.
- Leave the door slightly open 1-2 inches (see Figure 3.26) for 2 to 3 minutes to get a good flame going then close the door, latching it lightly and push the SBT button. See Figure 3.27.
- After about 5 minutes, close and latch the door completely then push the SBT button again. See Figure 3.28.

Figure 3.23 Loading Wood

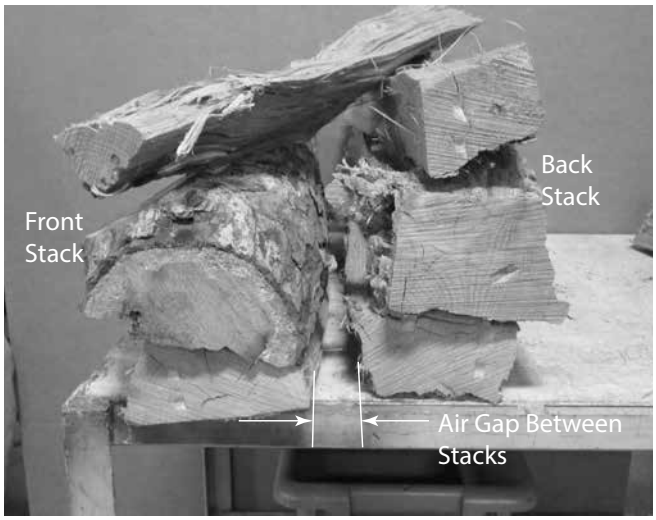

Figure 3.24 Stacking Wood

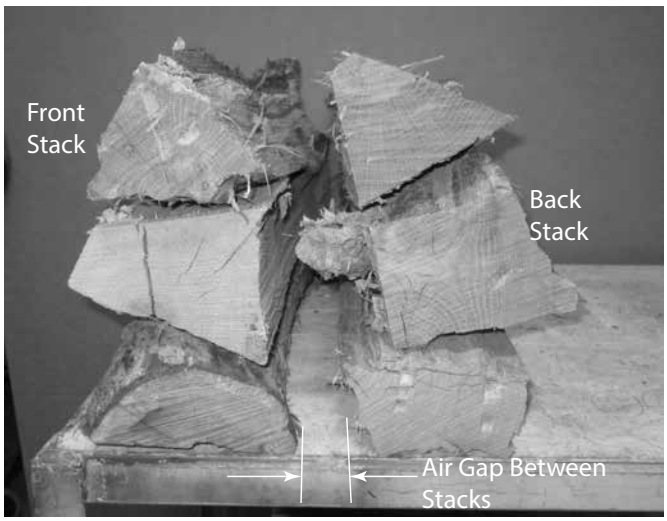

Figure 3.245Stacking Wood

Figure 3.26 Door Open 1-2 Inches

Figure 3.27 Door Latched Lightly

Figure 3.28 Door Fully Closed

Reloading the Appliance

- If the light is red or the appliance needs more fuel, push the button, open the door slowly, stir up the coals, load the wood and shut the door.

WARNING! Risk of Fire!

This wood appliance has manufacturer-set minimum low burn rate that must not be altered. It is against federal regulations to alter this setting or otherwise operate this wood appliance in a manner inconsistent with operating instructions in this manual.

F. Manual Override of Air Control

The appliance can be operated manually if necessary when electricity or batteries are not available. It is necessary to remove the front actuator pin and manually control the Air Control located inside the bottom access panel.

CAUTION

The Air Control may become HOT to touch. Use gloves or tool to adjust.

1. Open the Control Access Door
2. Remove the front Actuator Pin by grasping the ring and pulling sideways
3. The Air Control will move freely forward and backward
4. Pushing the Air Control towards the back of the appliance is high
5. Pulling the Air Control towards the front will reduce the burn rate.

The Actuator Pin should be installed when the electricity or batteries have been restored.

1. Align the hole in the Air Control with the hole in the Actuator
2. Insert the Actuator Pin

WARNING! Risk of Fire! *Keep combustible materials, gasoline and other flammable vapors and liquids clear of the fireplace.*

DO NOT:

- *store flammable materials close to the fireplace*
- *use gasoline, lantern fuel, kerosene, charcoal lighter fluid or similar liquids to start or "freshen up" a fire in this fireplace. The results can be fatal.*

Keep all flammable liquids well away from the fireplace while it is in use. Combustible materials may ignite.

G. Frequently Asked Questions

ISSUES	SOLUTIONS
Odor from appliance	When first operated, this appliance may release an odor for the first several hours. This is caused by the curing of the paint and the burning off of any oils remaining from manufacturing.
Metallic noise	Noise is caused by metal expanding and contracting as it heats up and cools down, similar to the sound produced by a furnace or heating duct. This noise does not affect the operation or longevity of the appliance.
Whirring sound	The fan produces a whirring sound which increases in volume as the speed is increased.

CONTACT YOU DEALER for additional information regarding operation and troubleshooting.
Visit www.fireplaces.com to find a dealer.

⚠ WARNING

DO NOT PLACE COMBUSTIBLE OBJECTS IN FRONT OF THE APPLIANCE. High temperatures may ignite clothing, furniture or draperies.

⚠ WARNING

Fire Risk.

- DO NOT BURN GARBAGE OR FLAMMABLE FLUIDS SUCH AS GASOLINE, NAPTHA OR ENGINE OIL.
- Do NOT burn treated wood or wood with salt (driftwood).
- May generate carbon monoxide if burn material other than wood.

May result in illness or possible death.

NOTE: Home owners are encouraged to provide smoke and carbon monoxide detectors in accordance with the authority having jurisdiction.

⚠ WARNING

Fire Risk.

Keep combustible materials, gasoline and other flammable vapors and liquids clear of appliance.

- Do NOT store flammable materials in the appliance's vicinity.
- DO NOT USE GASOLINE, LANTERN FUEL, KEROSENE, CHARCOAL LIGHTER FLUID OR SIMILAR LIQUIDS TO START OR "FRESHEN UP" A FIRE IN THIS HEATER.
- Keep all such liquids well away from the heater while it is in use.
- Combustible materials may ignite.

H. Quick Start Guide

PUSH SMART BURN TECHNOLOGY (SBT) ACTIVATION BUTTON

APPUYEZ SUR LE BOUTON D'ACTIVATION DE LA TECHNOLOGIE DE BRÛLAGE INTELLIGENT.

1

LOAD PAPER & KINDLING ON TOP AND LIGHT

AJOUTEZ DU BOIS D'ALLUMAGE AVEC DU PAPIER SUR LE DESSUS ET ALLUMEZ

2

***LEAVE DOOR AJAR UNTIL FIRE IS ESTABLISHED**

***LAISSEZ LA PORTE ENTROUVERTE JUSQU'À CE QUE LE FEU EST ÉSTABLI**

3

PUSH SBT BUTTON, ADD MORE WOOD, CLOSE AND LATCH DOOR

POUSSEZ LE BOUTON, AJOUTEZ PLUS DE BOIS, FERMEZ ET VE ROUILLEZ LA PORTE

4

**Refer to Owner's Manual or use and care video on how to program
*Starting a fire may not require an open door for draft.

LED Operation

Light	What To Do
Green	Everything OK; air control is fully open.
None	Everything OK; push button when reloading fuel.
2 fast red blinks then no color for 1 second	Left thermocouple error, call your dealer.
3 fast red blinks then no color for 1 second	Right thermocouple error, call your dealer.
1 red blink every 1/2 second continually	Overfire indication; do not load fuel. Call your dealer.

WARNING! RISK OF FIRE

Close and securely latch the door after the fire has started, and after refueling, to prevent:

- -Spillage of smoke, flame and carbon monoxide
- -Spillage of sparks, coals and logs
- -Over-firing

DO NOT leave the appliance unattended with the door open.

4 Maintenance and Service

This fireplace needs periodic inspection and repair for proper operation. It is against federal regulations to operate this fireplace in a manner inconsistent with operating instructions in this manual.

WARNING! Hot Surfaces!

Glass and other surfaces are hot during operation AND cool down. ***DO NOT*** *clean fireplace until it is cooled.*

Task	Frequency	To be completed by
1. Chimney Inspection	As needed	Homeowner or Chimney Sweep
2. Chimney Cleaning	As needed	Chimney Sweep
3. Plated Surfaces Cleaning	As needed	Homeowner
4. Glass Door	Seasonally	
5. Glass Cleaning	As needed	
6. Door Gasket	Seasonally	
7. Ash Removal	As needed	
8. Baffle/Blanket/Channel Protector	Seasonally	
9. Firebrick	Seasonally	

A. Maintenance Tasks-Homeowners

Installation and repair should be done by a qualified service technician only. The fireplace should be inspected before use and at least annually by a professional service person.

The following tasks may be performed annually by the homeowner. If you are uncomfortable performing any of the listed tasks, please call your dealer for a service appointment.

1. Chimney Inspection

Frequency: As necessary; at least annually before lighting fireplace, or once every two months during heating season.
By: Homeowner/Chimney Sweep

- Confirm that termination cap remains clear and unobstructed.
- Inspect for blockages such as bird nests, leaves, etc.
- Inspect for corrosion or separation.
- Inspect for creosote and remove as needed, at least every two months during the heating season.
- Inspect the system at the fireplace connection and at the chimney top.

In the event of a chimney fire, Hearth & Home Technologies recommends replacement of the chimney and inspection of the adjacent structure to the provisions of NFPA Level III inspection criteria.

WARNING! Risk of Asphyxiation and Fire! *Annual inspection by qualified technician recommended.*

Check:
- *condition of door, surrounds and fronts*
- *condition of glass and glass assembly*
- *obstructions of combustion and ventilation air*
- *obstructions of termination cap*

Clean:
- *glass*
- *air passageways, grilles*

2. Creosote (Chimney) Cleaning

Frequency: As needed; at least annually before lighting, or once every two months during heating season. When creosote has accumulated it shall be removed to reduce the risk of a chimney fire.
By: Chimney Sweep
Tools Needed: Brush, Phillips screwdriver

- When wood is burned slowly, it produces tar and other organic vapors, which combine with expelled moisture to form creosote. The creosote vapors condense in the relatively cool chimney flue of a slow-burning fire. As a result, creosote residue accumulates on the flue lining. When ignited, this creosote makes an extremely hot fire.
- Remove all ash from the firebox and extinguish all hot embers before disposal. Allow the fireplace to cool completely.
- Remove baffle and ceramic blanket from fireplace before cleaning chimney (refer to Section 5.C.3 Baffle Removal and Installation).
- Close the door tightly.
- Remove the top of the termination cap as shown in Figure 4.1 to clean the cap and chimney.
- The creosote or soot should be removed from the chimney with a brush specifically designed for the size of chimney in use.
- Reinstall termination cap.
- Clean out fallen debris from the firebox.
- Replace baffle and ceramic blanket.

WARNING! Risk of Fire! *Ignited creosote is extremely HOT. Prevent creosote buildup.*

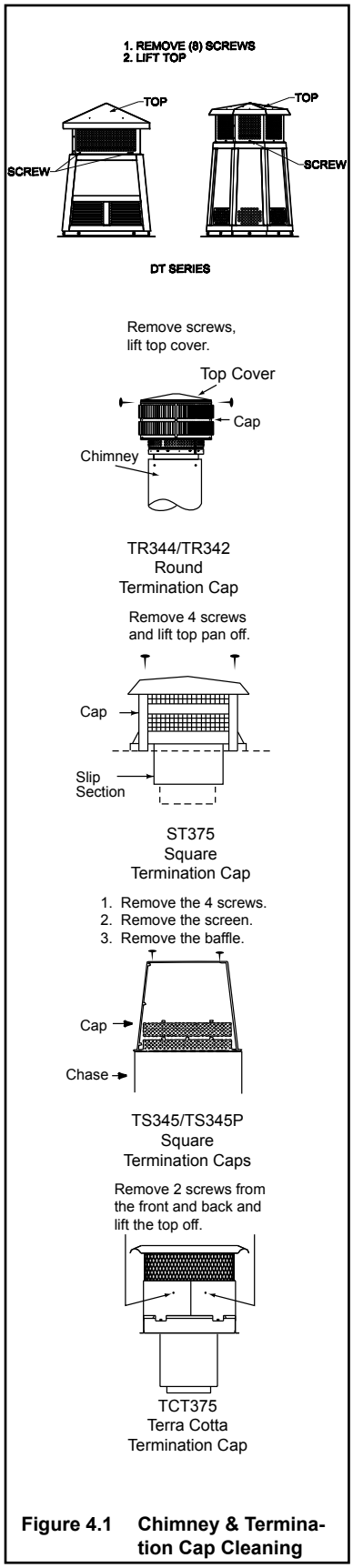

Figure 4.1 Chimney & Termination Cap Cleaning

3. Care and Cleaning of Plated Surfaces

Frequency: Initially and as needed
By: Homeowner
Tools Needed: Vinegar or glass cleaner, soft towel

CAUTION! *Do not use a polish with abrasives. It will scratch plated surfaces.*

- Use a glass cleaner or vinegar and towel to remove the oils.
- Oils can cause permanent markings on plating if not removed.
- After plating is cured, oils will not affect the finish.

4. Glass Door

Frequency: As necessary
By: Homeowner

- Inspect glass panel for cracks. Replace if this condition is present.
- Inspect glass gasket. Confirm glass does not move around in glass frame.

5. Glass Cleaning

Frequency: As necessary
By: Homeowner
Tools Needed: Vinegar or glass cleaner, soft towel

- Clean glass with a non-abrasive glass cleaner. Use a damp cloth dipped in wood ashes or a commercially available oven cleaner. Remove any oven cleaner residue with a glass cleaner or soap and water.

6. Door Gasket

Frequency: Seasonally
By: Homeowner

- Open door, place half a dollar bill inside and close the door.
- Attempt to pull the bill out.
- If the bill gives good resistance or is not removable, the gasket is adjusted correctly. If the bill is easily removed, the gasket needs adjustment or replacement to create an even seal all around door.

It may be necessary to adjust or tighten the door latch.

7. Ash Removal

Frequency: As necessary
By: Homeowner
Tools Needed: Covered metal container, metal shovel, fireplace broom

WARNING! Risk of Fire! DO NOT *remove ashes until the fire is out and the fireplace is cold.*

- Ashes should be placed in metal container with tight fitting lid.
- The closed container of ashes should be placed on a noncombustible floor or on the ground, well away from all combustible materials, pending final disposal.
- If the ashes are disposed of by burial in soil or otherwise locally dispersed, they should be retained in the closed container until all cinders have thoroughly cooled.

8. Baffle and Blanket

Frequency: As necessary
By: Homeowner
Tools Needed:

- Ensure correct baffle and baffle protection channel placement; replace baffle components if damaged or missing.
- The ceramic blanket and baffle board MUST be in contact with the back of the firebox and even with each other in the front. The baffle protection channel MUST be in position. Refer to Section 3.A.3.

9. Firebrick

Frequency:
By:
Tools Needed:

- Inspect condition of brick. Replace if crumbly or otherwise deteriorated, or if cracks exceed 1/4 in. (6 mm).

B. Replacement Maintenance

1. Glass Replacement

- Ensure that the fire is out and the fireplace is cool to the touch.
- Protect a table or counter top with padding or towels.
- Open the door and while supporting it, remove the (2) top hinge screws and retainer, lift door up and off.
- Lay door face down on table or counter making sure handle and handle attachment knob hang over the edge of the table top so door lays flat on the soft surface.
- Remove screws from the top and bottom glass frame (12 screws) using a #2 Phillips Head screwdriver. Set frame aside and retain screws.
  HINT: Soak screws in penetrating oil for easy removal.
- Remove the glass and discard.
- Position the new glass with gasket into the door.
- Replace the glass frames.
- Start screws to secure glass frame to door, keeping them loose for adjusting the glass. Then continue to tighten each screw alternately, a few turns at a time, until the glass panel is tightened snugly. DO NOT OVERTIGHTEN OR CROSS THREAD SCREWS.
- Replace the door on the fireplace.
- After the first burn, recheck the tightness of the screws.

NOTICE: *Remove all labels from glass before lighting the first fire in your fireplace.*

CAUTION!

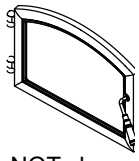

Handle glass assembly with care.

When cleaning glass:
- Avoid striking, scratching or slamming glass.

- Do NOT clean glass when hot.
- Do NOT use abrasive cleaners.
- Use a hard water deposit glass cleaner on white film.
- **Refer to maintenance instructions.**

WARNING

Injury Risk.
- Use only glass specified in manual.
- DO NOT REPLACE with any other material.

2. Tighten or Adjust Door Latch

Remove the lock nut holding latch cam and one or two spacing washers on the door as shown in Figure 4.2. Reinstall the cam and tighten locknut.

OR

Replace the gasket material. Wear or damage to the gasket material can cause air leakage into the firebox resulting in overfiring and loss of efficiency.

A replacement gasket is available from your dealer.

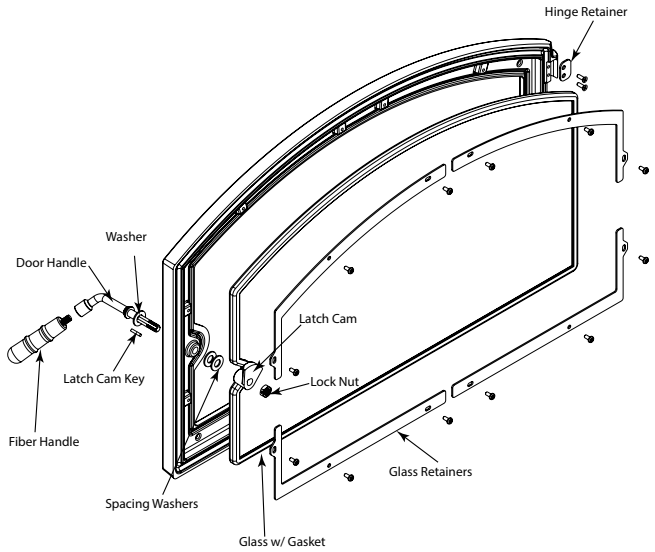

Figure 4.2 Door Assembly

3. Manifold Tubes Removal and Replacement

- Remove all ash from the firebox disposing of it in a metal container.
- The manifold tubes are located in the upper portion of the inside of the firebox.
- Each tube is attached with one 3/16” stainless steel hex head screw attached to the firebox on the left hand side. The right hand side of the tube just slides into a hole.
- Please note that each tube is different in regards to the air holes or mounting holes.
- Remove the hex head screw and clip. Slide the tube to the right, angle down and pull out. It is recommended to replace one tube at a time to insure correct placement.

4. Door Handle Assembly

- Slide door handle through door.
- Install washer(s) as shown in Figure 4.3.
- Install key groove.
- Align groove in latch cam with key; slide latch cam over shaft.
- Install locknut but do not overtighten, the handle needs to move smoothly.
- Install fiber handle using a clockwise motion until the fiber handle is snug against the door handle shaft.

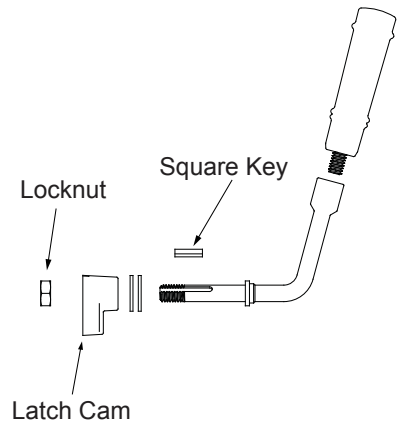

Figure 4.3

5. Firebrick Replacement

The firebox of your fireplace is lined with high quality firebrick and refractory board under the bottom firebrick only, which has exceptional insulating properties. There is no need to use a grate; simply build a fire on the firebox floor. Do not operate the fireplace without bricks.

IMPORTANT: The bricks are very similar in size. Be certain you have the proper brick in the correct location. Measure the brick size for accuracy.

After the coals are completely cooled, remove all old firebrick and ash from unit and vacuum out firebox.

- Remove new brick set from box and lay out to diagram shown in Figure 4.4.
- If the bottom refractory board needs replacing, do so at this time.
- Lay bottom bricks in unit.
- Install rear bricks on the top of the bottom bricks. Slide top of bricks under clip on back of firebox wall and push bottom of brick back.
- Install side bricks. Slide top of brick under clips on side of firebox and push the bottom of the brick until it is flush with the side of the unit.

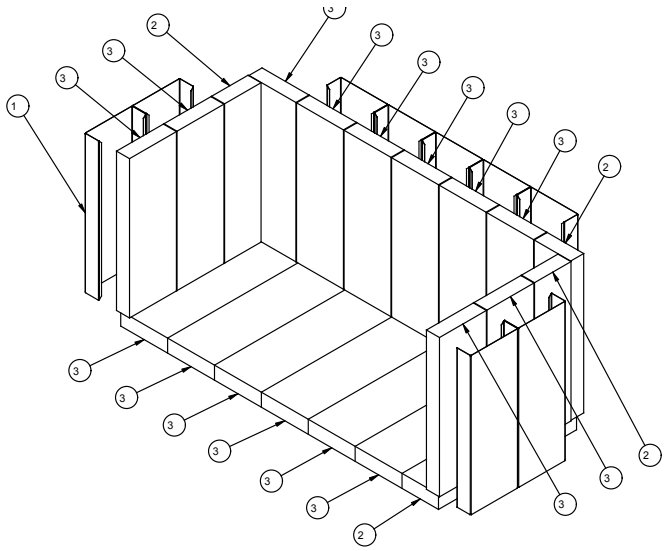

Figure 4.4 Fire Brick Configurations

#	Brick Size	Qty. in Set
1	Brick Wrap	**9**
2	Firebrick 13.25 x 3.50 x 1.25	4
3	Firebrick 13.25 x 4.50 x 1.25	16

6. Thermocouple Replacement

- To replace a thermocouple, ensure the appliance is completely cool.
- Shut off power to the appliance or unplug the control board from the junction box.
- Remove the dust cover by lifting up and pulling out to expose the control board.
- Remove the thermocouple wire that needs replacing from the control board by pulling up on it and feeding it back through the grommet. See Figure 4.5.

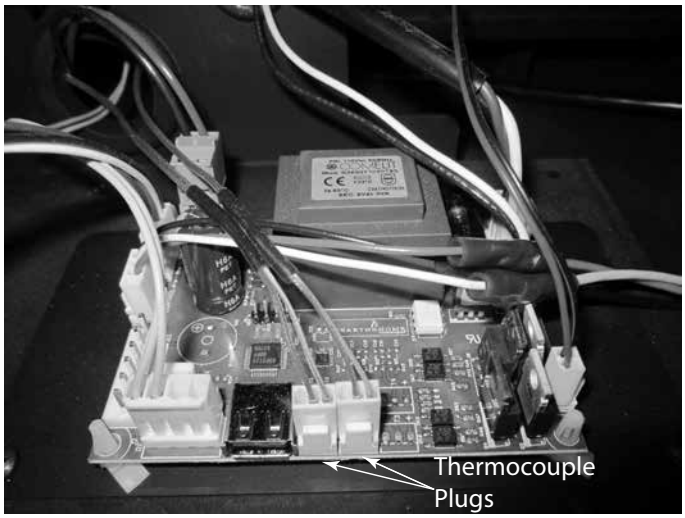

Figure 4.5 Control Board

- Next, open the appliance door, look for the thermocouple in the top left or top right side of the firebox. Once located, using a 3/16" Allen wrench, remove the (2) Allen bolts, then pull the cover plate (with the Thermocouple guard attached to it) down and off of the thermocouple. See Figure 4.6.

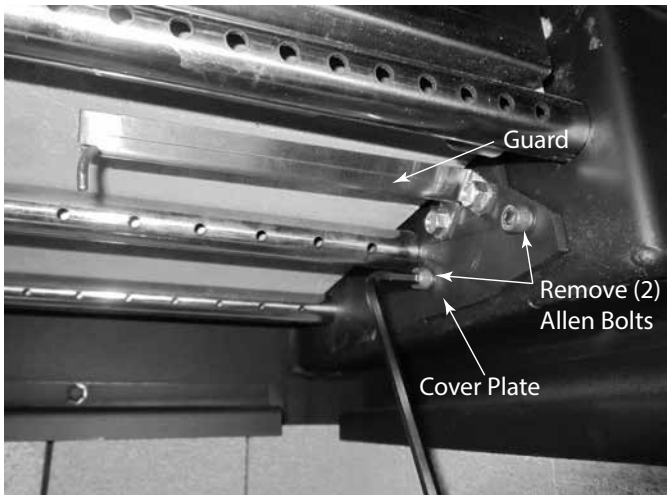

Figure 4.6 Cover Plate with Thermocouple Guard

- Using a long 3/8" nut driver, remove the (2) bolts in through the hole holding the thermocouple on. See Figure 4.7.

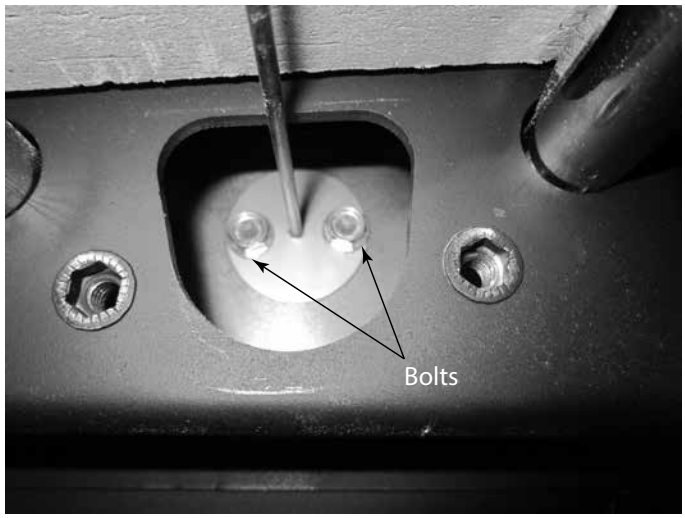

Figure 4.7 Remove Bolts (Access cover removed)

- Pull the thermocouple wire up and out of the hole while feeding the wire up from the bottom.
- Install the new thermocouple by feeding the end with the plug on it down through the hole and out through the bottom opening.
- Secure the thermocouple to the appliance and reinstall the cover plate with the thermocouple guard. Connect the wires to the control board and the dust cover.

7. Baffle Removal and Installation

WARNING! Hot Surfaces!

Glass and other surfaces are hot during operation AND cool down. ***DO NOT*** *clean fireplace until it is cooled.*

- Remove all ash from firebox and place into a metal container.
- Remove the baffle protection channel by lifting it up and turning it down and pulling it out of the firebox. See Figure 4.8.

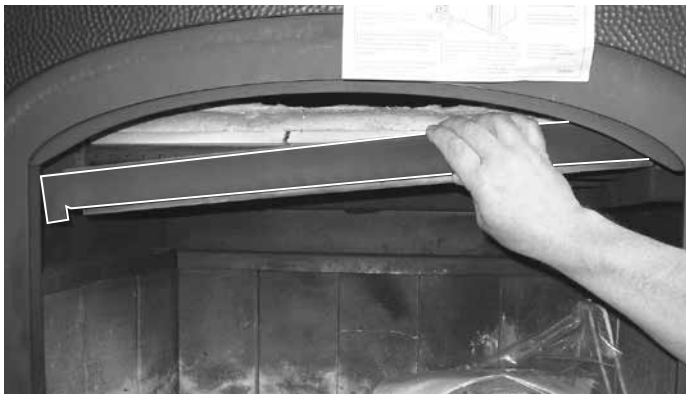

Figure 4.8 Removing Baffle Protection Channel

Figure 4.9 Baffle Board Locations

- The baffle board is in two pieces. Pull one piece at a time forward, tilting it down and out. See Figure 4.9.
- Remove the other piece the same way.
- If replacing the ceramic blanket, pull it forward/down and out.
- Reinstall the ceramic blanket up and over the manifold tubes, making sure it is laying flat and pushed back.
- Reinstall the baffle boards and the baffle protection channel. See Figures 4.10 and 4.11.

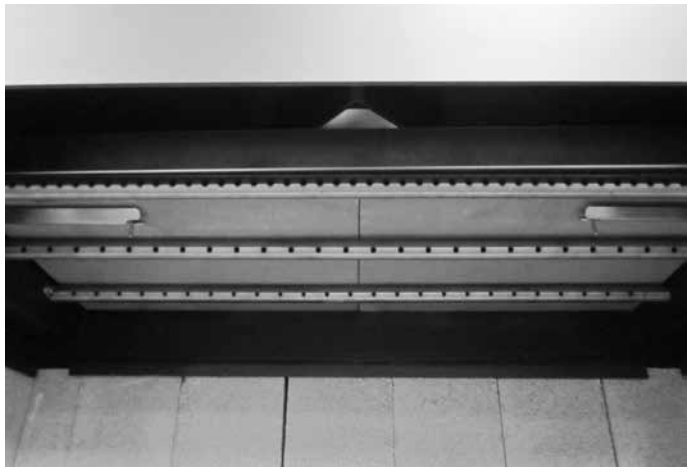

Figure 4.10 Reinstall Baffle Boards

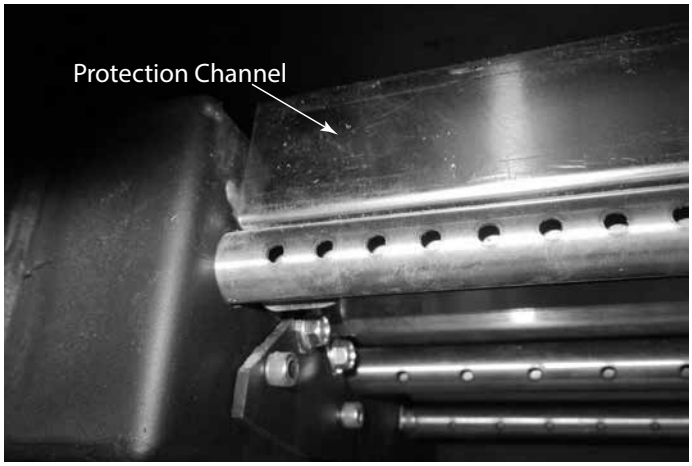

Figure 4.11 Reinstall Baffle Protection Channel

8. Fan Replacement

CAUTION! Risk of Shock! *Disconnect power by turning off circuit breaker before servicing or unplugging control board from junction box in behind the access panel..*

The Fireplace comes equipped with two fans, installed at the factory with electric access on both sides of the fireplace.

- **Fan Replacement Instructions**

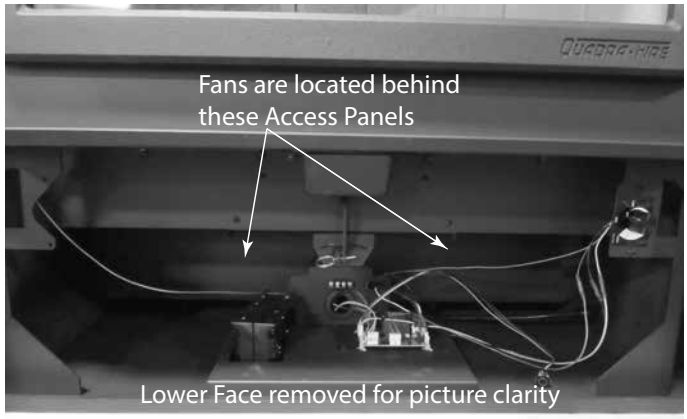

Figure 4.12 Fan Locations

- Open the bottom access panel and remove it by pulling out on one of the spring hinges.
- Lift the control cover up and out to expose the control board. See Figure 4.13.

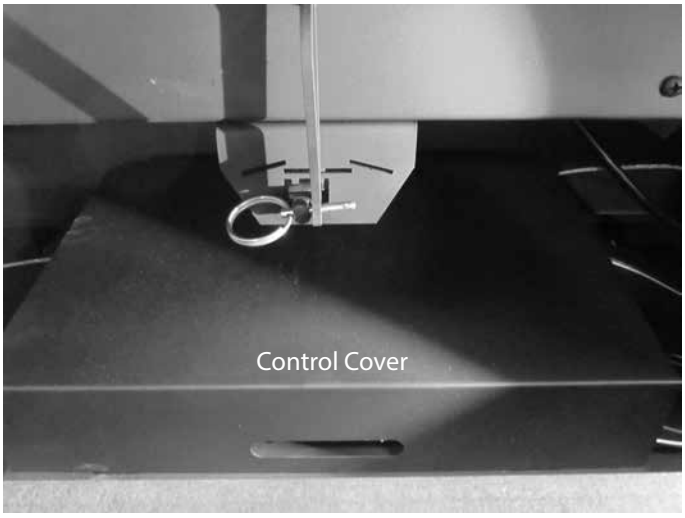

Figure 4.13 Remove Control Cover

- Unplug the thermocouple wires from the control board. See Figure 4.14.

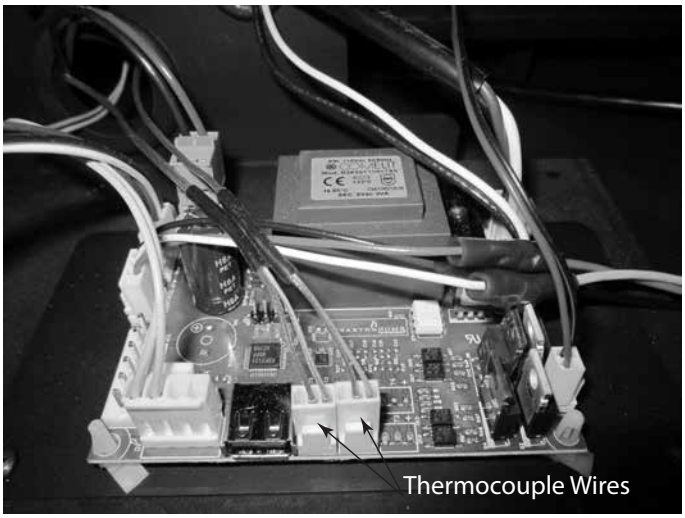

Figure 4.14 Unplug Thermocouple Wires

- Remove the (4) screws from each fan access panel and pull them forward and out. See Figure 4.15.

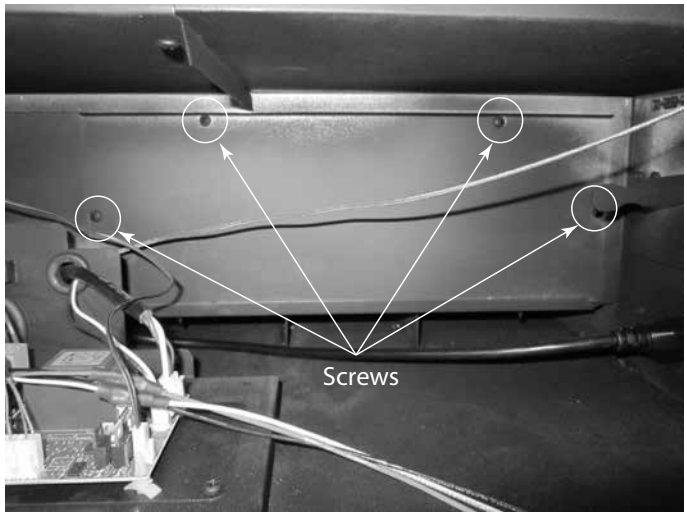

Figure 4.15 Remove Screws From Access Panel

- Disconnect the wires from the fans. See Figure 4.16.

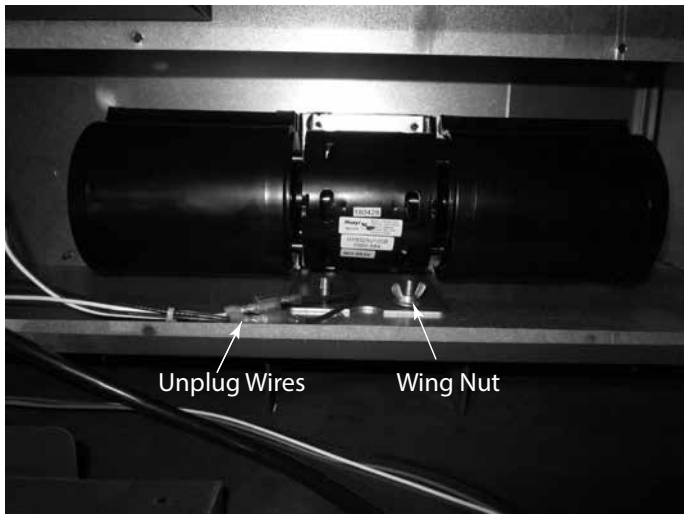

Figure 4.16 Disconnect Wires from Fans

- Remove the wing nuts that lock the fans down.
- Life the fans up to clear the bolts and fish them around and out the front.
- Reinstall in the reverse order.

5 Troubleshooting

A. FAQs

Hearth & Home Technologies assumes no responsibility for the improper performance of the fireplace system caused by inadequate draft due to environmental conditions, down drafts, tight sealing construction of the structure, or mechanical exhausting devices which will create a negative air pressure within the structure where the fireplace is located.

If smoke spillage occurs from a fireplace opening when the door is open, there is either a leakage in the flue, a blockage in the flue, or some condition is affecting draft Understanding and differentiating the conditions which can cause each of these kinds of spillage problems is essential to their solution.

- Flue Leakage
  Check for improperly connected flue joints or a damaged flue joint in the chimney system. Such leakage would reduce draft (air would be drawn in through the leaks rather than through the fireplace). The result might be difficult start-up and smoky fires that might spill if other adverse draft conditions accompany this problem.
- Flue Blockage
  The damper should be open.
  Check for objects that may have fallen down the chimney.

Flue draft is measured as negative pressure in the chimney. The amount of negative pressure determines how strong the draft is. The draft is important because it draws the combustion air into the fireplace and pulls the smoke out of the chimney.

There are three basic criteria essential in establishing and maintaining flue draft:

- availability of combustion air
- heat generated from the fire
- diameter and height of the flue system

These three factors work together as a system to create the flue draft. Increasing or decreasing any one of them will affect the other two and thus change the amount of draft in the entire system.

If the fire is hard to start and smoke spills out of the fireplace, or you find it difficult to establish and maintain a moderately high burn rate, then the flue draft is too low and corrective measures must be taken.

Be sure you have air available for combustion and that your firewood is dry and well seasoned. Build your fires properly and according to the instructions given in operating instructions, “Starting a Fire”. Be sure your flue system is installed correctly and that it is the proper diameter and height. Check for the following:

- All chimney sections are properly installed.
- The chimney is clean and free of creosote or soot buildup.
- Make sure overhanging trees and branches are cut back within ten feet of the top of the chimney and the chimney is free of debris from animals.
- Ensure the chimney cap is clean and free of any buildup of soot or creosote if cap is equipped with a spark arrestor screen.
- Be sure the ceramic blanket (above the baffle) and the baffle are in their proper positions
- The wood being used in dry and well seasoned.

If you still suspect you have a low draft problem it may be necessary to increase the volume of air in your flue system. Since the diameter of your flue system is matched with the size of the flue collar and should not be changed, then the height of the system must be increased. Add chimney sections one at a time until the draft improves.

In some cases, regardless of what you do, it can still be difficult to establish the proper flue draft. This is especially evident when using an exterior factory-built chimney or exterior masonry chimney. Try holding a burning rolled up newspaper as close to the flue outlet as possible for a few minutes, then light the paper under the kindling. The heat generated from the burning rolled up newspaper should help get the draft established.

Still other factors can affect how well your flue system performs. Neighboring structures, high winds, tall trees, even hillsides can affect air currents around the chimney. Well designed chimney caps are available that can help. Your fireplace dealer is the local expert in your area. He can usually make suggestions or discover problems that can be easily corrected allowing your fireplace to operate correctly as it has been designed, providing safe and economical heat for your home.

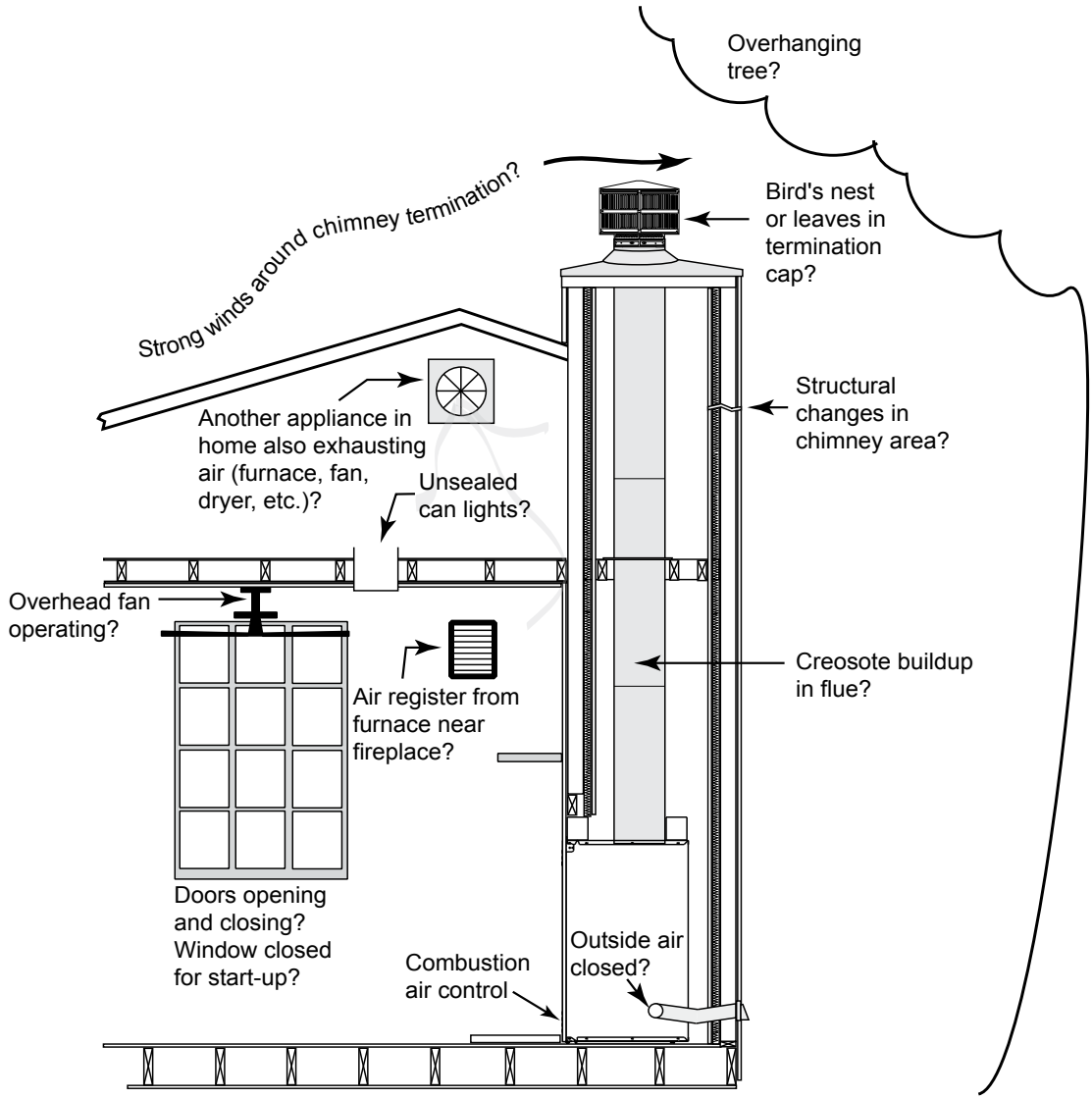

Figure 5.1 Factory-built Fireplaces: Troubleshooting

B. Troubleshooting Table

With proper installation, operation, and maintenance your wood burning appliance will provide years of trouble-free service. If you do experience a problem, this troubleshooting guide will assist you or a qualified service person in the diagnosis of a problem and the corrective action to be taken.

Start Fire Problems	Possible Cause	Solution
Can not get fire started Excessive smoke or spillage Burns too slowly Not enough heat output	Not enough kindling/paper or no kindling/paper	Use dry kindling, more paper. Arrange kindling & wood for air movement.
	Not enough air for fire to ignite	Check for restricted termination cap
		Check for blockage of outside air kit (if installed).
		Check for flue blockage.
		Pre-warm flue before starting fire (refer to Building a Fire Section).
		Check for adequate vent height.
		Open window below the appliance towards the wind.
	Wood condition is too wet, too large	Use dry, seasoned wood (refer to Seasoned Wood Section).
	Bed of coals not established before adding wood	Start with paper & kindling to establish bed of coals (refer to Building a Fire Section).
	Flue blockage such as birds' nests or leaves in termination cap	Have chimney and cap inspected and cleaned by a certified chimney sweep.
	Down draft or negative pressure Competition with exhaust devices	Do not use exhaust fans during start-up.
		Open window below the appliance towards the wind.
	Activation button not pressed when starting fire	Press activation button and ensure that the indicator light turns solid green.
	Actuator on air control did not move to full open position	In all cases the air control will move to the full open position after pressing the activation button. A visual check of this may be in order or follow the field diagnostics guide.
	Blinking red light indicated on activation button	This is indicating a fault of a component in the appliance. Refer to the diagnostics guide to analyze the blinking and to diagnose further. Do not operate appliance.
	No AC power to appliance	Check breaker box and ensure both ends of the power cord are plugged in underneath.
	Low Batteries or NO batteries placed in battery backup appliance	Low voltage of the battery pack or lack of batteries in the backup battery pack will not allow operation of system if regular AC power is not available. Replace batteries.
	Air control disconnected from actuator due to previous disconnecting	If the air control was disconnected due to no regular AC power/ no batteries or low battery voltage condition then it will be necessary to reattach the air control to the actuator.

Troubleshooting Guide con't

Fire burns too fast	Extremely dry or soft wood	Mix in hardwood.
		Mix in less seasoned wood after fire is established (refer to Wood Fuel Section).
	Overdrafting	Check for correct vent height; too much vertical height creates overdrafting.
		Check location of vent termination (refer to Chimney Termination Requirement Section).
	Too much fuel was loaded into appliance when reloaded.	Proper amounts of fuel must be loaded based on specific home conditions and exterior weather conditions.
	Air control is not closing to reduce burn rate.	This could be related to any of the conditions found above. Refer to the field diagnostics to perform some testing.
	Thermocouples in appliance are no longer in proper position.	The thermocouples that sense the condition of the fire in the appliance must be in the proper location. A hit from loading fuel or other event may have caused them to bend excessively. In a cool appliance they can be bent back into proper position.
	Thermocouple failure.	This will be indicated by a blinking light on the activation button. Refer to diagnostics.
Fan not operating properly	Fan not turning on when appliance is hot.	Check that the rotational position of the power level knob is on a selected power level rather than off.
		Check that the fan wire is plugged into the control board underneath.
		Check that the fan is plugged into the back of the appliance.
	Fan is running at maximum setting all the time.	This could indicate a failure of the thermocouples in the appliance. This condition will also be indicated by a blinking light on the activation button. Refer to diagnostics.
Glass doesn't stay clean	Burning on low, wet wood	Establish a good hot fire. Use well-seasoned wood.

Diagnostics

Indication	Item	Fault Implication while in use to homeowner
Green Light	Activation button has been pushed.	Appliance is ready for a new fire or reload.
No Light	Normal	Appliance is in shutdown mode.
Two blinks flashes of red light then long off (1 sec)	Left Thermocouple burned out (open circuit)	Appliance will exhibit either late or premature shutdowns. Could lead to snuffing of the fire if shutdown too quickly or too much heat when commanded to shutdown.
Three fast blinks of red light then long off (1 sec)	Right Thermocouple burned out (open circuit)	Appliance will exhibit either late or premature shutdowns. Could lead to snuffing of the fire if shutdown too quickly or too much heat when commanded to shutdown.
.5 second on and .5 off of red light	Overfire Indication	The appliance air control is 'stuck' open if we are seeing temps over the safety limit for 30 minutes. Stuck due to a jammed air control or a faulty linear actuator. Not much the controller can do other than alert the homeowner with the status light because it may have happened while homeowner was away.

1. Battery Backup
2. SBT Button/Light
3. Fan Control
4. Thermostat/thermostat block
5. USB Port (for manufacturing only)
6. Thermocouple
7. Thermocouple
8. Air Control Actuator
9. Fan Power
10. Power In
11. Fust .5A Slow IEC Glass

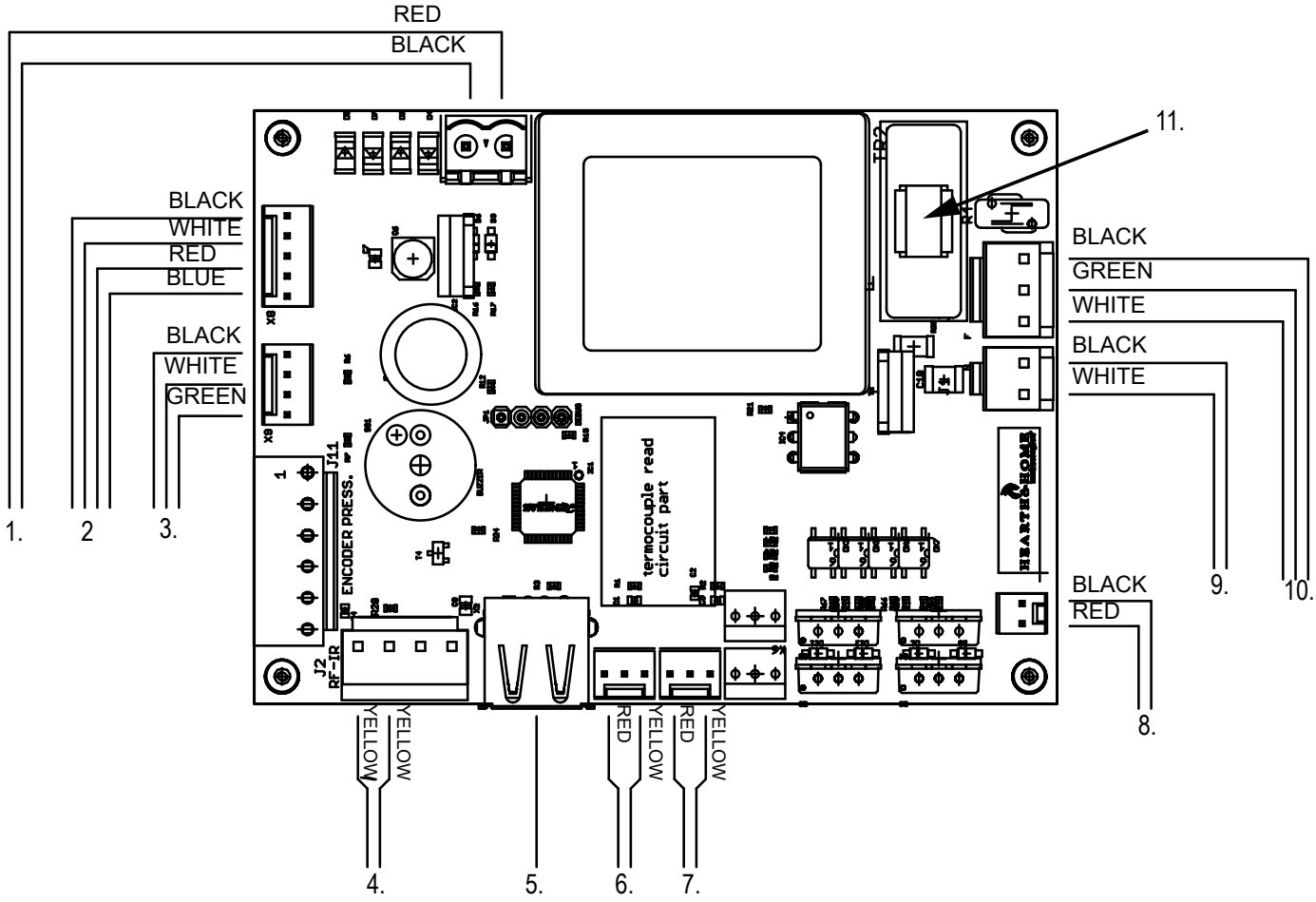

Figure 5.2 Circuit Board Wiring Diagram

6 Reference Materials

A. Service Parts

HEARTH & HOME technologies

Service Parts **PIONEER-III-BK**

Wood-burning Fireplace

Beginning Manufacturing Date: May 2019
Ending Manufacturing Date: Active

PIONEER-III-ABK - Arch Door **PIONEER-III-RBK - Rectangle Door**

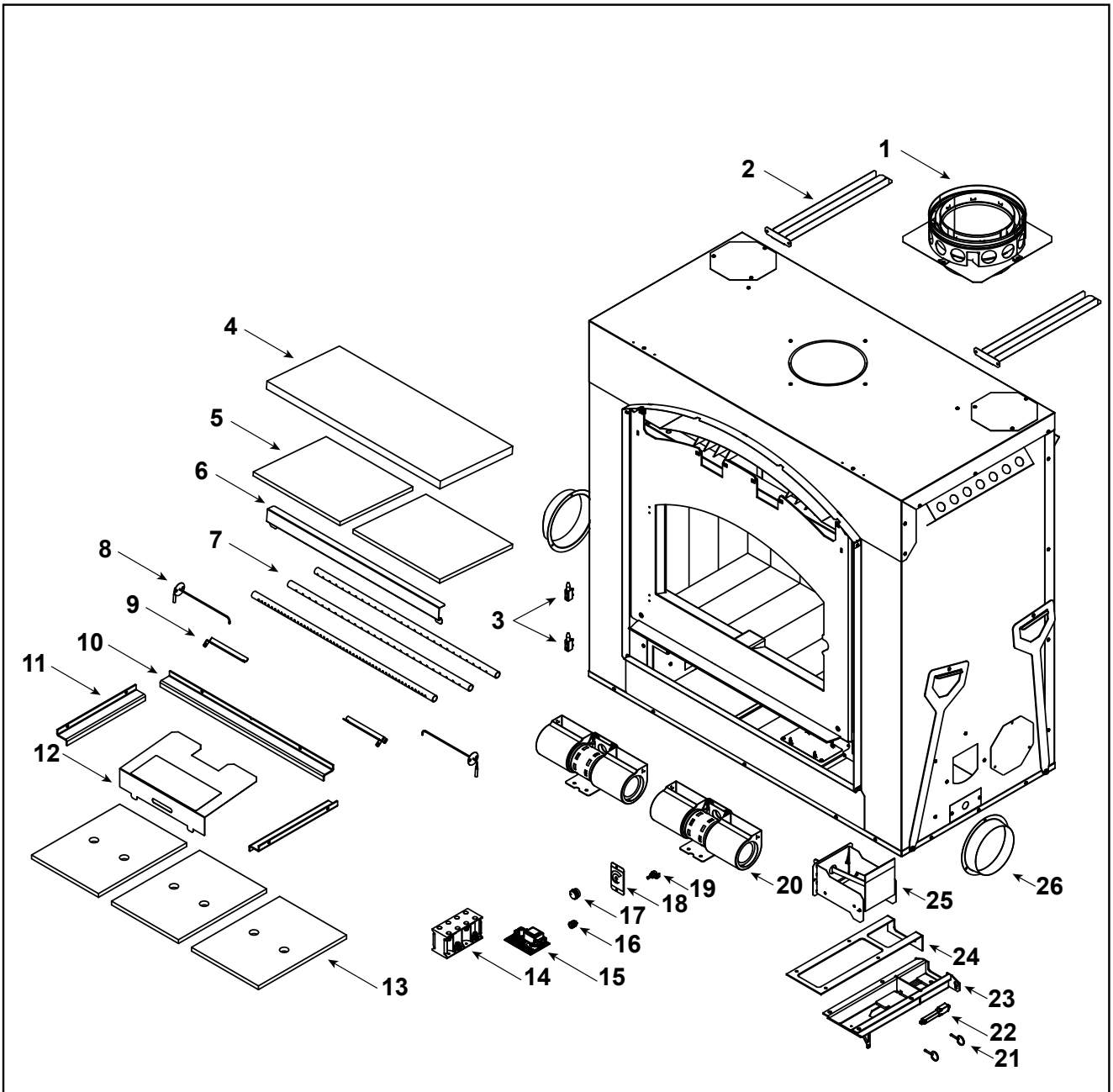

Part number list on following page.

IMPORTANT: THIS IS DATED INFORMATION. Parts must be ordered from a dealer or distributor. **Hearth and Home Technologies does not sell directly to consumers**. Provide model number and serial number when requesting service parts from your dealer or distributor.

ITEM	DESCRIPTION	COMMENTS	PART NUMBER	Stocked at Depot
1	Starter Plate Assembly		SL1	
	8 in Starter Section		SRV22069	**Y**
2	Standoff, Front	Qty 2 req	SRV4182-233	
3	Hinge, Male	Qty 2 req	SRV4181-302	
4	Baffle Blanket		SRV4182-205	
5	Baffle	Qty 2 req	SRV4182-113	
6	Baffle Protector		SRV4182-195	
7	Manifold Tube Set	Set of 3	TUBES-4182	**Y**
8	Thermocouple	Qty 2 req	SRV4083-147	
	Wire Harness, Thermostat		SRV4182-304	**Y**
9	Sheild, Sensor	Qty 2 req	SRV4083-212	
10	Brick Retainer, Back		SRV4182-123	
11	Brick Retainer, Side	Qty 2 req	SRV4182-121	
12	Cover Assembly, Control Board		SRV4182-034	
13	Refractory Bottom	Qty 3 req	SRV4182-135	
14	Battery Back Up		SRV4083-177	**Y**
15	Control Board Assembly		SRV4182-050	**Y**
	Wire Harness, AC		SRV4182-176	**Y**
	Wire Harness, JBOX		SRV4182-311	**Y**
16	Push Button		SRV4182-134	**Y**
17	Knob Knurled Black		SRV4083-743	
18	Control Plate Assembly		SRV4083-035	
19	Fan Control		SRV4083-179	
20	Fan Assembly	Qty 2 req	SRV433-5890	**Y**
	Wire Harness, Fan AC		SRV4182-178	**Y**
21	Detent Pin, 5/32	Qty 2 req	SRV4083-376	
22	Linear Actuator		SRV4083-130	**Y**
23	Air Control Channel Assembly		SRV4182-012	
24	Gasket, Air Control Channel Assembly		SRV4182-189	
25	Outside Air Assembly		SRV4182-039	
26	Unit Collar	Qty 2 req	SRV4087-314	
	Non-Comb Board Assembly	PIONEER-III-ABK	SRV4182-064	
		PIONEER-III-RBK	SRV4183-064	
	Touch Up Paint	Black	812-0910	
	Outside Air Hood Assembly		4059-051	

Additional service part numbers on following page.

IMPORTANT: THIS IS DATED INFORMATION. Parts must be ordered from a dealer or distributor. **Hearth and Home Technologies does not sell directly to consumers**. Provide model number and serial number when requesting service parts from your dealer or distributor.

#27 Door Assembly

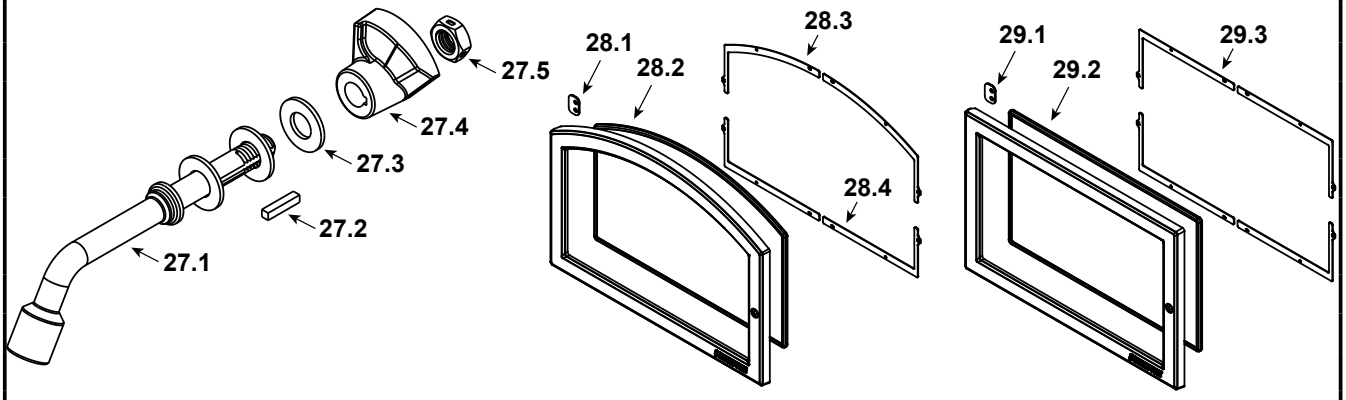

ITEM	DESCRIPTION	COMMENTS	PART NUMBER	Stocked at Depot
27	Door Handle Assembly		SRV4181-022	**Y**
27.1	Handle, Door		SRV4181-301	
27.2	Latch Cam Key		SRV430-1151	
27.3	Washer, 3/8 SAE	Pkg of 3	832-0990	**Y**
27.4	Door Latch Cam Mill		SRV430-1141	
27.5	Nut, 3/8 - 16 Prevailing Torque	Pkg of 24	226-0100/24	**Y**
	Fiber Handle		SRV433-1380	**Y**
28	Arch Door Assembly		SRV4182-030	
28.1	Hinge Retainer		SRV4181-122	
28.2	Glass Assembly		SRV4182-031	**Y**
	Rope, 1/2 Wire Jacket	10 Ft	7000-811/10	**Y**
28.3	Glass Retainer	Qty 2 req	SRV4182-241	
28.4	Glass Retainer	Qty 2 req	SRV4182-240	
	Screw, 8-32 x 3/8 PPH BK	Pkg of 40	225-0500/40	**Y**
29	Retangle Door Assembly		SRV4183-030	
29.1	Hinge Retainer		SRV4181-122	
29.2	Glass Assembly		SRV4183-031	**Y**
	Rope, 1/2 Wire Jacket	10 Ft	7000-811/10	**Y**
29.3	Glass Retainer	Qty 4 req	SRV4183-240	
	Screw, 8-32 x 3/8 PPH BK	Pkg of 40	225-0500/40	**Y**

Additional service part numbers on following page.

IMPORTANT: THIS IS DATED INFORMATION. Parts must be ordered from a dealer or distributor. **Hearth and Home Technologies does not sell directly to consumers**. Provide model number and serial number when requesting service parts from your dealer or distributor.

#30 Brick Assembly

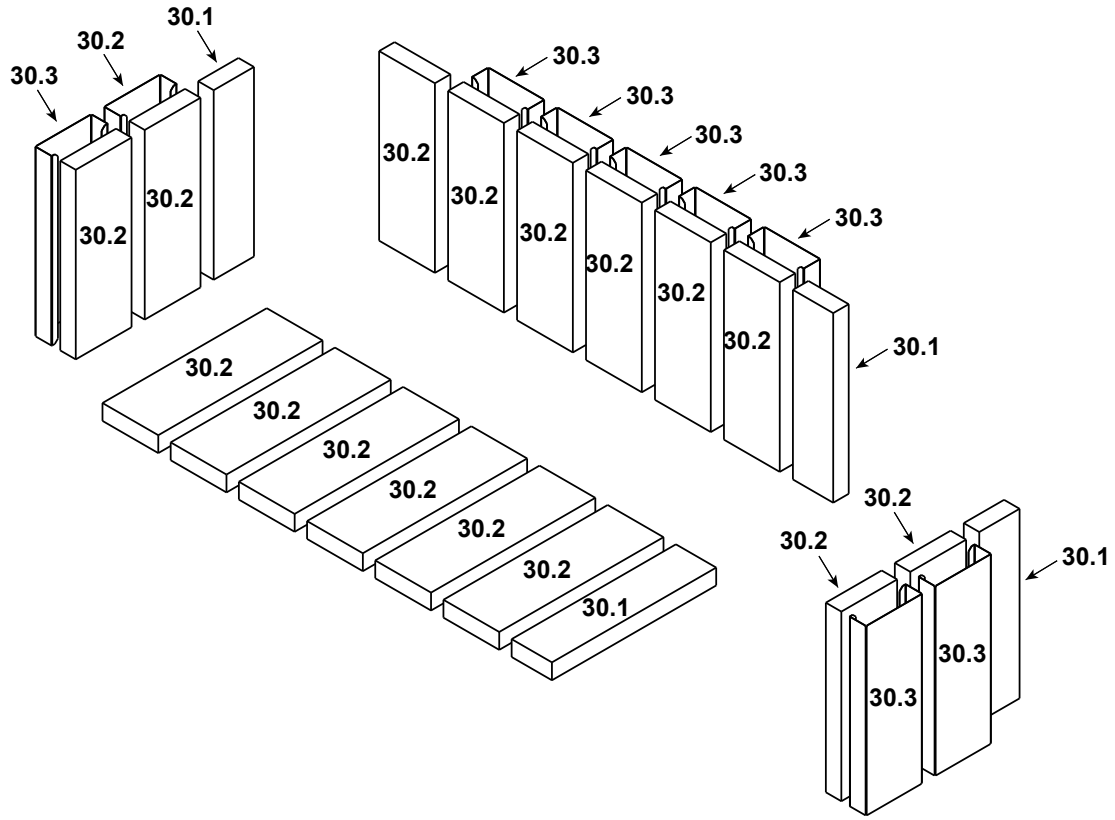

ITEM	DESCRIPTION	COMMENTS	PART NUMBER	Stocked at Depot
30	Brick Assembly		SRV4182-016	**Y**
30.1	Brick, 13 1/4 x 3 1/4 x 1 1/4	Qty 4 req	SRV4182-203	
30.2	Brick, 13 1/4 x 4 1/2 x 1 1/4	Qty 16 req	SRV4182-301	
30.3	Brick Wrap	Qty 9 req	SRV4182-101	
	Fastener Packs			
	Nut, 3/8 - 16 Prevailing Torque	Pkg of 24	226-0100/24	**Y**
	Screw, 8-32 x 3/8 PPH BK	Pkg of 40	225-0500/40	**Y**
	Screw, 8 x 1/2 PPH BK	Pkg of 40	12460/40	**Y**
	Screw, HWH MS 1/4-20 x 3/4	Pkg of 25	220-0080/25	**Y**
	Washer, 3/8 SAE BK	Pkg of 3	832-0990	**Y**

B. Contact Information

Hearth & Home Technologies
1915 West Saunders Street
Mount Pleasant, Iowa 52641

Please contact your dealer with any questions or concerns.

For the number of your nearest dealer, please visit www.fireplaces.com.

– NOTES –

CAUTION

DO NOT DISCARD THIS MANUAL

- Important operating and maintenance instructions included.
- Read, understand and follow these instructions for safe installation and operation.
- Leave this manual with party responsible for use and operation.

This product may be covered by one or more of the following patents: (United States) 6601579, 6769426, 6863064, 7077122, 7074035, 7098269, 7234932, 7258116, 7322819, 7422011, 7470729, 7726300, 8147240, 9625149 or other U.S. and foreign patents pending.

2000-945E

Installation Manual

Installation and Fireplace Setup

Pour demander un exemplaire en français de ce Manuel du propriétaire, visitez www.fireplaces.com/translations

INSTALLER: Leave this manual with party responsible for use and operation.
OWNER: Retain this manual for future reference.

Contact your dealer with questions on installation, operation, or service.

HEARTH & HOME technologies

Model(s):

PIONEER-III-ARC
PIONEER-III-REC

C UL US LISTED

PFS C US F24-253

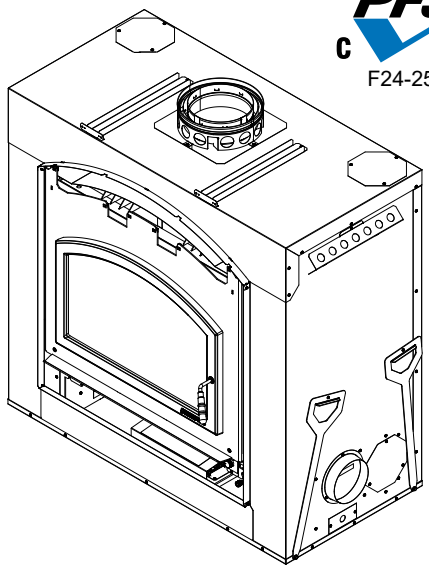

HEAT & GLO
heatilator
MAJESTIC

EPA CERTIFIED WOODBURNING FIREPLACE

Installation and service of this appliance should be performed by qualified personnel. Hearth & Home Technologies recomends HHT Factory Trained or NFI certified professionals.

hearthED FACTORY TRAINING Fuel Your Fire

NFI NATIONAL FIREPLACE INSTITUTE A CERTIFICATION AGENCY

WARNING! Risk of Fire and/or Asphyxiation!

- Read all the instructions before starting the installation. Follow these instructions carefully during the installation to ensure maximum safety and benefit.
- Comply with all minimum clearances to combustibles as specified. Failure to comply may cause house fire.

⚠ WARNING

HOT SURFACES!
Glass and other surfaces are hot during operation AND cool down.

Hot glass will cause burns.
- **DO NOT** touch glass until it is cooled
- NEVER allow children to touch glass
- Keep children away

- CAREFULLY SUPERVISE children in same room as fireplace.
- Alert children and adults to hazards of high temperatures.

High temperatures may ignite clothing or other flammable materials.
- Keep clothing, furniture, draperies and other flammable materials away.

Safety Alert Key:

- ***DANGER!*** Indicates a hazardous situation which, if not avoided will result in death or serious injury.
- ***WARNING!*** Indicates a hazardous situation which, if not avoided could result in death or serious injury.
- ***CAUTION!*** Indicates a hazardous situation which, if not avoided, could result in minor or moderate injury.
- ***NOTICE:*** Indicates practices which may cause damage to the fireplace or to property.

Table of Contents

1 Product Specific & Important Safety Information
A. Appliance Safety Certification 4
▶ B. Appliance Emissions Certification 4
▶ C. BTU Efficiency Specifications 4
D. Mobile Home Approved 4
E. Glass Specifications 5
F. Non-Combustible Materials 5
G. Combustible Materials 5
H. Electrical Codes 5

2 Getting Started
A. Typical Fireplace System 6
B. Design and Installation Considerations 7
1. Selecting Fireplace Locations 7
2. Locating Fireplace & Chimney 8
C. Tools and Supplies Needed 9
D. Inspect Fireplace and Components 9
▶ E. Fireplace System Requirements 9

3 Framing and Clearances
A. Appliance Dimensions/Weight 10
B. Clearances 11
C. Construct the Chase 12
D. Frame the Fireplace 13
E. Secure and Level the Fireplace 13
F. Installation of Top Standoffs 14
G. Protective Metal Hearth Strips 15
H. Non-Combustible Facing Board (Provided) 15
▶ I. Outside Air Kit 15
J. Fan Air Kit (Required) 18
K. Heat Zone Kit (Optional) 19

▶ 4 Electrical Wiring
A. Fireplace 23

5 Chimney and Termination Requirements
A. Chimney Requirements 24
B. Offsets/Returns 25
C. Termination Requirements 26

6 Chimney Installation
A. Typical Chimney System 27
B. Assemble Chimney Sections 28
C. Install Chimney Air Kit (CAK4A) 28
D. Secure Offset/Return 29
E. Install Ceiling Firestops 30
F. Install Attic Insulation Shield 31
G. Roof Penetration 32
H. Manufactured Home Installation 32
I. Install Chase/Chase Top 33
J. Install Termination Cap 34

7 Shrouds
A. Radiation Shield 35
B. Field Constructed Shrouds 35
1. Open Top Shroud 35
2. Mailbox Style Shroud 36
3. Roofed Style Shroud 36

8 Finishing
A. Template 38
B. Finish the Wall 39
1. Stone, Brick Finish 39
2. Tile, Granite, Marble Finish 39
C. Mantel and Wall Projections 39
D. Finishing the Hearth Extension 40
E. Non-Combustible Sealant Material 41

9 Fireplace Setup
A. Firebrick Placement 42
B. Baffle and Blanket Placement 43
C. Install Fascia (Fronts) 43

10 Reference Materials
A. Chimney Components 44
B. Accessories 48
C. Offset Diagrams 49

ATTENTION INSTALLER:

Follow this Standard Work Checklist

This standard work checklist is to be used by the installer in conjuction with, not instead of, the instructions contained in this installation manual.

Customer: _____
Lot/Address _____
_____

Model: PIONEER-III-ARC
PIONEER-III-REC

Date Installed: _____
Location of Fireplace: _____
Installer: _____
Dealer/Distributor Phone # _____
Serial #: _____

WARNING! Risk of Fire or Explosion! *Failure to install fireplace acording to these instructions can lead to a fire or explosion.*

Fireplace Install	**YES**	**IF NO, WHY?**
Verified that the chase is insulated and sealed.	☐	
Required non-combustible board is installed.	☐	
Verified clearances to combustibles.	☐	
Fireplace is leveled and secured.	☐	
Hearth extension size/height decided.	☐	
Outside air kit installed.	☐	
Optional Heat Zone has been installed by a qualified service technician.	☐	
Fan air kit installed.	☐	
Chimney Section 5		
Chimney configuration complies with diagrams.	☐	
Chimney installed, locked and secured in place with proper clearance.	☐	
Chimney air kit installed.	☐	
Firestops installed.	☐	
Attic insulation shields installed.	☐	
Roof flashing installed and sealed.	☐	
Terminations installed and sealed.	☐	
Electrical Section 4		
Switch wires properly installed.	☐	
Finishing Section 7		
Combustible materials not installed in non-combustible areas.	☐	
Verified all clearances meet installation manual requirements.	☐	
Mantels and wall projections comply with installation manual requirements.	☐	
Protective hearth strips and hearth extension installed per manual requirements.	☐	
Fireplace Setup Section 8		
All packaging and protective materials removed.	☐	
Firebrick, baffle and ceramic blanket installed correctly.	☐	
Facia and doors properly installed.	☐	
Manual bag and all of its contents are removed from inside/under the fireplace and given to the party responsible for use and operation.	☐	
All packaging materials are removed from inside/under the fireplace.	☐	

Hearth & Home Technologies recommends the following:

- Photographing the installation and copying this checklist for your file.
- That this checklist remain visible at all times on the fireplace until the installation is complete.

Comments: Further description of the issues, who is responsible (Installer/Builder/Other Trades, etc.) and corrective action needed:

_____
_____
_____

Comments communicated to party responsible _____ by _____on _____
(Builder/Gen. Contractor) (Installer) (Date)

1 Product Specific & Important Safety Information

A. Appliance Safety Certification

Model:	PIONEER-III-ARC & PIONEER-III-REC
Laboratory:	Underwriter's Laboratories, Inc.
Report No:	Project 4788732172
Type:	Wood Fireplace
Standard:	UL127-2011 and CAN/ULC-S610-2018 (A1998) and (UM) 84-HUD, Manufactured Home Approved.

B. Appliance Emissions Certification

Model:	PIONEER-III-ARC & PIONEER-III-REC
Laboratory:	PFS TECO
Report No:	F24-253
Standard:	EPA Method 28R, ASTM E2515, ASTM E2780 and CSA B415.1
Can be found at: www.fireplaces.com/shopping-tools/epa-certifications	

C. BTU & Efficiency Specifications

EPA Certified Emissions:	1.3 g/hr
*LHV Tested Efficiency:	73%
**HHV Tested Efficiency:	68%
***EPA BTU Output:	18,000/hr
****Peak BTU/Hour Output:	85,175
Vent Size:	8 inches
Firebox Size:	4.06 cubic feet
Recommended Log Length:	24 inches
Fuel	Seasoned Cord Wood less than 20% moisture
HHT:	SL300 Series
DuraVent:	DuraPlus

*Weighted average LHV (Low Heating Value) efficiency using crib wood and data collected during EPA emission test. LHV assumes the moisture is already in a vapor state so there is no loss in energy to vaporize.

**Weighted average HHV (High Heating Value) efficiency using crib wood and data collected during EPA emission test. HHV includes the energy required to vaporize the water in the fuel.

***BTU outputs based on HHV (High Heating Value) and the burn rate from EPA tests using crib wood.

****A peak BTU out of the appliance calculated using the maximum first hour burn rate from the High EPA Test and BTU content of seasoned cordwood (8600) times the efficiency.

PIONEER-III-ARC & PIONEER-III-REC are Certified to comply with 2020 particulate emission standards.

The PIONEER-III-ARC & PIONEER-III-REC Wood Appliances meet the U.S. ENVIRONMENTAL PROTECTION AGENCY Certified to comply with 2020 particulate emission standards using crib wood.

This wood heater needs periodic inspection and repair for proper operation. It is against federal regulations to operate this wood heater in a manner inconsistent with operating instructions in this manual.

D. Mobile Home Approved

This appliance is approved for mobile home installations when not installed in a sleeping room and when an outside combustion air inlet is provided. The structural integrity of the mobile home floor, ceiling, and walls must be maintained. The appliance must be properly grounded to the frame of the mobile home and use only listed double-wall connector pipe.

E. Glass Specifications

This appliance is equipped with 5mm ceramic glass. Replace glass only with 5mm ceramic glass. Please contact your dealer for replacement glass.

NOTE: This installation must conform with local codes. In the absence of local codes you must comply with the **UL127-2011, (UM) 84-HUD and NPFA211** in the U.S.A. and the CAN/**ULC S610-2018 (A1998) and CAN/CSA-B365 Installation Codes** in Canada.

DO NOT:

- *install or operate damaged fireplace*
- *modify fireplace*
- *install other than as instructed by Hearth & Home Technologies*
- *operate the fireplace without fully assembling all components*
- *install unvented gas log set*
- *install any component not approved by Hearth & Home Technologies*
- *install parts or components not Listed or approved*

Improper installation, adjustment, alteration, service or maintenance can cause injury or property damage. For assistance or additional information, consult a qualified installer, service agency or your dealer.

***WARNING! Risk of Fire!** Hearth & Home Technologies disclaims any responsibility for, and the warranty and agency listing will be voided by the above actions.*

Hearth & Home Technologies WILL NOT warranty appliances that exhibit evidence of over-firing. Evidence of over-firing includes, but is not limited to:

- Warped air tube
- Deteriorated refractory brick retainers
- Deteriorated baffle and other interior components

F. Non-Combustible Materials

Material which will not ignite and burn, composed of any combination of the following:

- Steel
- Brick
- Concrete
- Glass
- Plaster
- Iron
- Tile
- Slate

Materials reported as passing **ASTM E 136, Standard Test Method for Behavior of Metals, in a Vertical Tube Furnace of 750° C.**

G. Combustible Materials

Material made of or surfaced with any of the following materials:

- Wood
- Plant Fibers
- Plywood/OSB
- Compressed Paper
- Plastic
- Sheet Rock (drywall)
- Foam insulation & sealants

Any material that can ignite and burn: flame proofed or not, plastered or un-plastered.

H. Electrical Codes

NOTICE: *This fireplace must be electrically wired and grounded in accordance with local codes or, in the absence of local codes, with* **National Electric Code ANSI/ NFPA 70-latest edition** *or the* **Canadian Electric Code CSA C22.1.**

- A 110-120 VAC circuit for this product must be protected with ground-fault circuit-interrupter protection, in compliance with the applicable electrical codes, when it is installed in damp locations.

WARNING! *Improper installation, adjustment, alteration, service or maintenance can cause injury or property damage.*

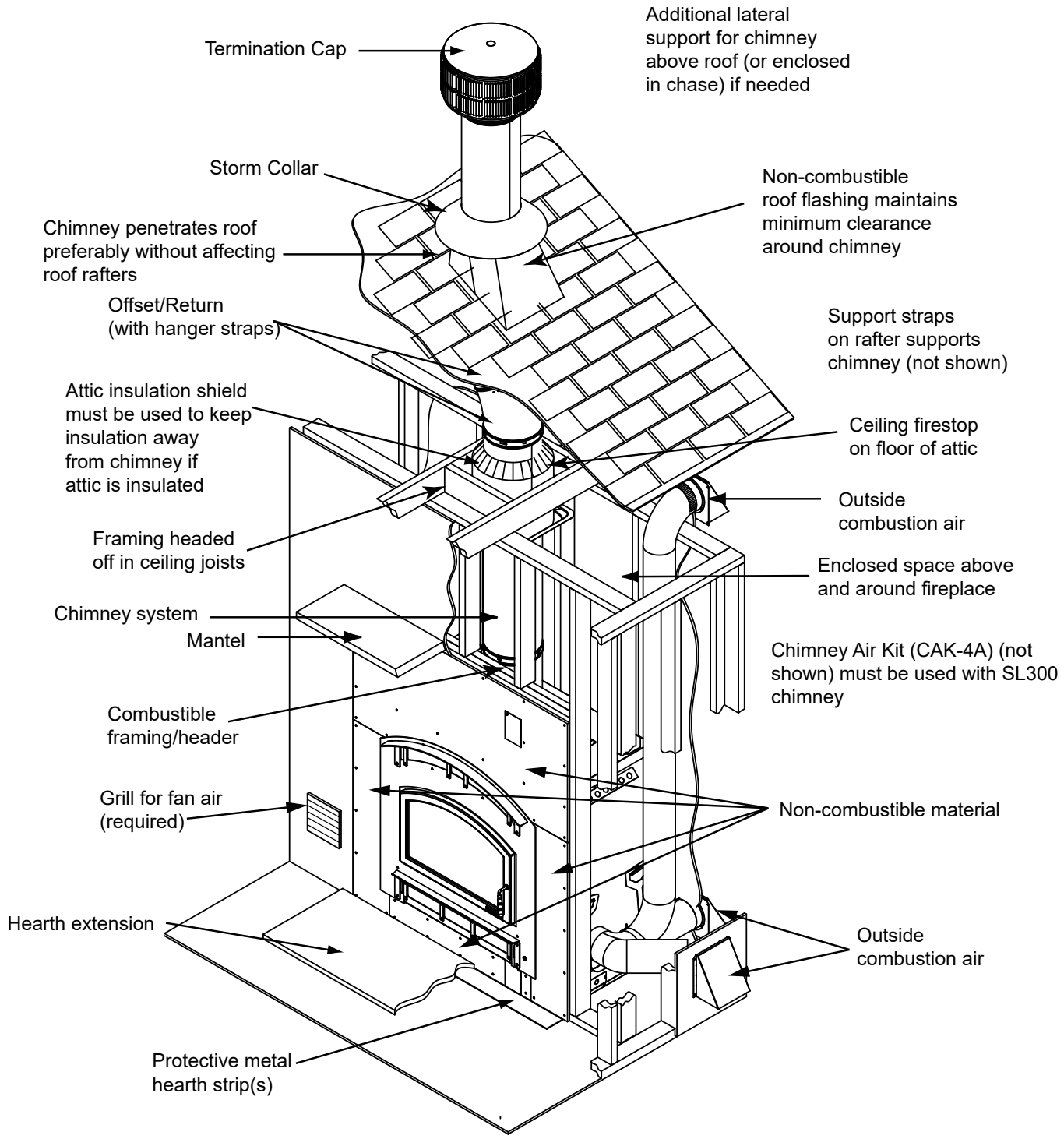

Figure 2.1 Typical Fireplace System

B. Design and Installation Considerations

NOTICE: *Check building codes prior to installation.*

- Installation MUST comply with local, regional, state and national codes and regulations.
- Consult insurance carrier, local building inspector, fire officials or authorities having jurisdiction over restrictions, installation inspection and permits.

1. Selecting Fireplace Locations

This fireplace may be used as a room divider, installed along a wall, across a corner or used in an exterior chase. See Figure 2.2.

Locating the fireplace in a basement, near frequently opened doors, central heat outlets or returns, or other locations of considerable air movement can affect the performance.

Outside air must be used for combustion. The PIONEER-III-ARC & PIONEER-III-REC come equipped with an outside air inlet to feed combustion air from outside the home, along with an outside air termination cap; the metal duct is required but not supplied. Consideration should be given to these factors before deciding on a location.

NOTICE: *In addition to these framing dimensions, also reference the following section:*

- *Clearances (Section 3).*

NOTICE:

- *Illustrations and photos reflect typical installations and are FOR DESIGN PURPOSES ONLY.*
- *Illustrations/diagrams are not drawn to scale.*
- *Actual installation/appearance may vary due to individual design preference.*
- *Hearth & Home Technologies reserves the right to alter its products.*

NOTICE:

A minimum 1 in. air clearance at the back and a minimum 1½ in. air clearance to the sides of the fireplace assembly must be maintained.

Chimney sections at any level require a 2 in. minimum air space clearance between the framing and chimney sections.

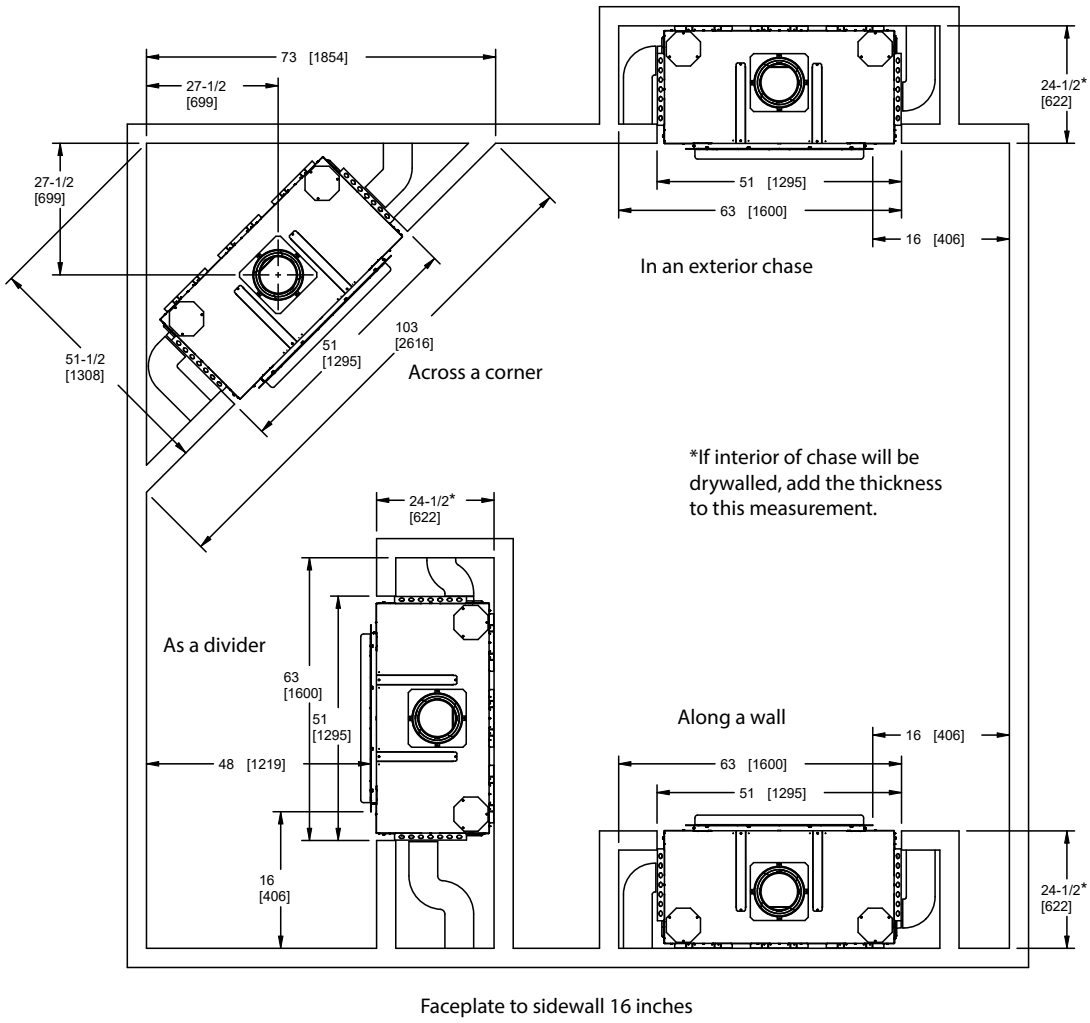

Figure 2.2 Fireplace Locations

2. Locating Fireplace & Chimney

Location of the fireplace and chimney will affect performance.

- Install within the warm airspace enclosed by the building envelope. This helps to produce more draft, especially during lighting and die-down of the fire.
- Penetrate the highest part of the roof. This minimizes the effects of wind loading.
- Locate termination cap away from trees, adjacent structures, uneven roof lines and other obstructions.
- Minimize the use of chimney offsets.
- Consider the fireplace location relative to floor and ceiling and attic joists.
- Take into consideration the termination requirements in Sections 5 and 6.
- Install the outside air kit and CAK (chimney air kit) with the intake facing prevailing winds during the heating season.
- Ensure adequate outdoor air for <u>all</u> combustion appliances and exhaust equipment.
- Ensure furnace and air conditioning return vents are not located in the immediate vicinity of the fireplace.
- Avoid installing the fireplace near doors, walkways or small isolated spaces.
- Recessed lighting should be a “sealed can” design.
- Attic hatches weather stripped or sealed.
- Attic mounted duct work and air handler joints and seams taped or sealed.

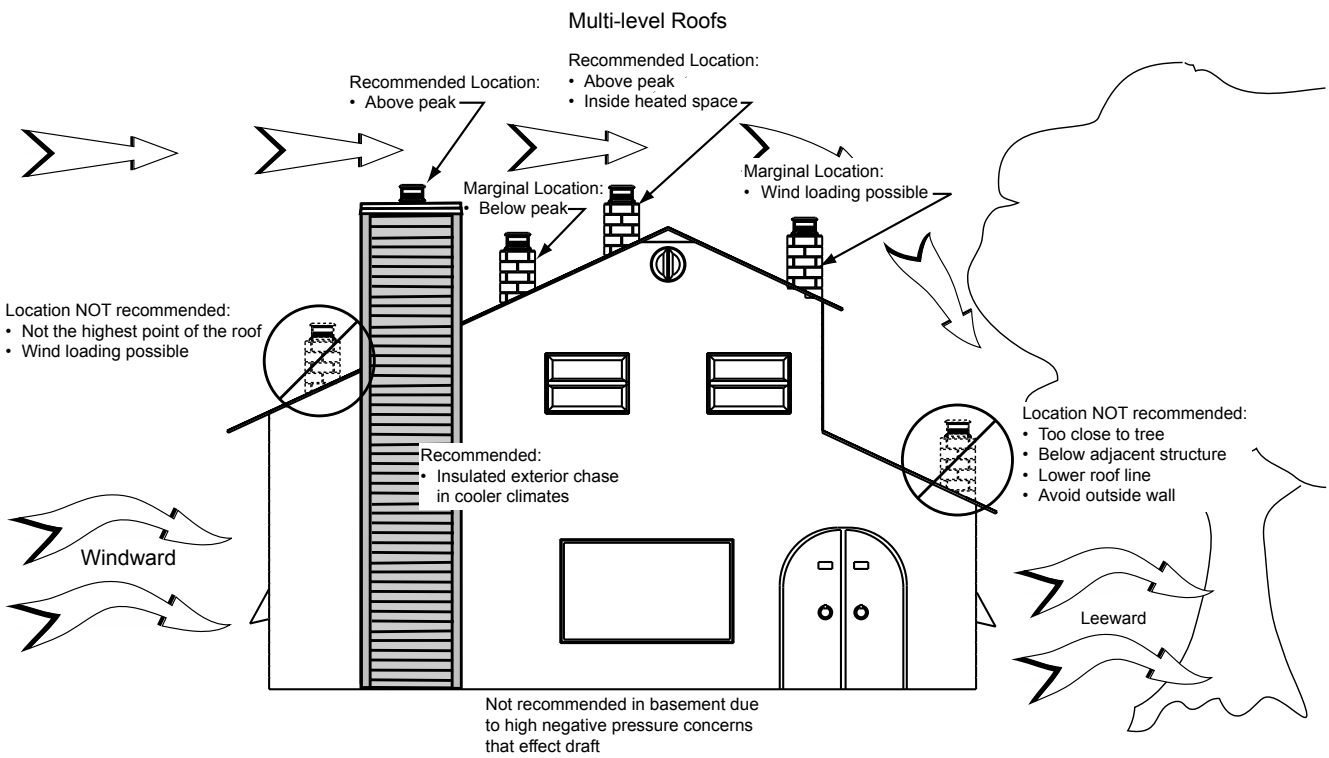

Figure 2.3 Recommended Chimney Locations

C. Tools and Supplies Needed

Before beginning the installation be sure the following tools and building supplies are available:

Reciprocating saw	Framing material
Pliers	Non-combustible sealant
Hammer	Gloves
Phillips screwdriver	Framing square
Flat blade screwdriver	Electric drill and bits
Plumb line	Safety glasses
Level	Tape measure

1/2-3/4 in. length, #6 or #8 self-drilling screws

Misc. screws and nails

D. Inspect Fireplace and Components

WARNING! Risk of Fire and Asphyxiation! *Damaged parts could impair safe operation.* ***DO NOT*** *install damaged, incomplete or substitute components.*

- Remove fireplace and components from packaging and inspect for damage.
- Chimney system components and other optional components are shipped separately.
- Report to your dealer any parts damaged in shipment.

E. Fireplace System Requirements

The fireplace system requirements consist of the following:

- Fireplace
  - Firebrick (included with fireplace)
  - Door (included with fireplace)
  - Non-combustible facing material (included with fireplace)
  - Hearth Extension
- Outside Air System (hood and collars included with fireplace)
- Fascia
- Chimney System
  - CAK4A Chimney air kit (included with fireplace, required with SL300 series chimney)
  - Attic Insulation Shield (included with fireplace)
  - Chimney termination cap
- Non-combustible finish material
- Fan Air System (grill and collar included with fireplace)

Optional components include:

- Lintel Bar
- Heat-Zone-WD Kit

3 Framing and Clearances

A. Appliance Dimensions/Weight

Appliance Weight Table

Model	Pounds
PIONEER-III-ARC	688
PIONEER-III-REC	680

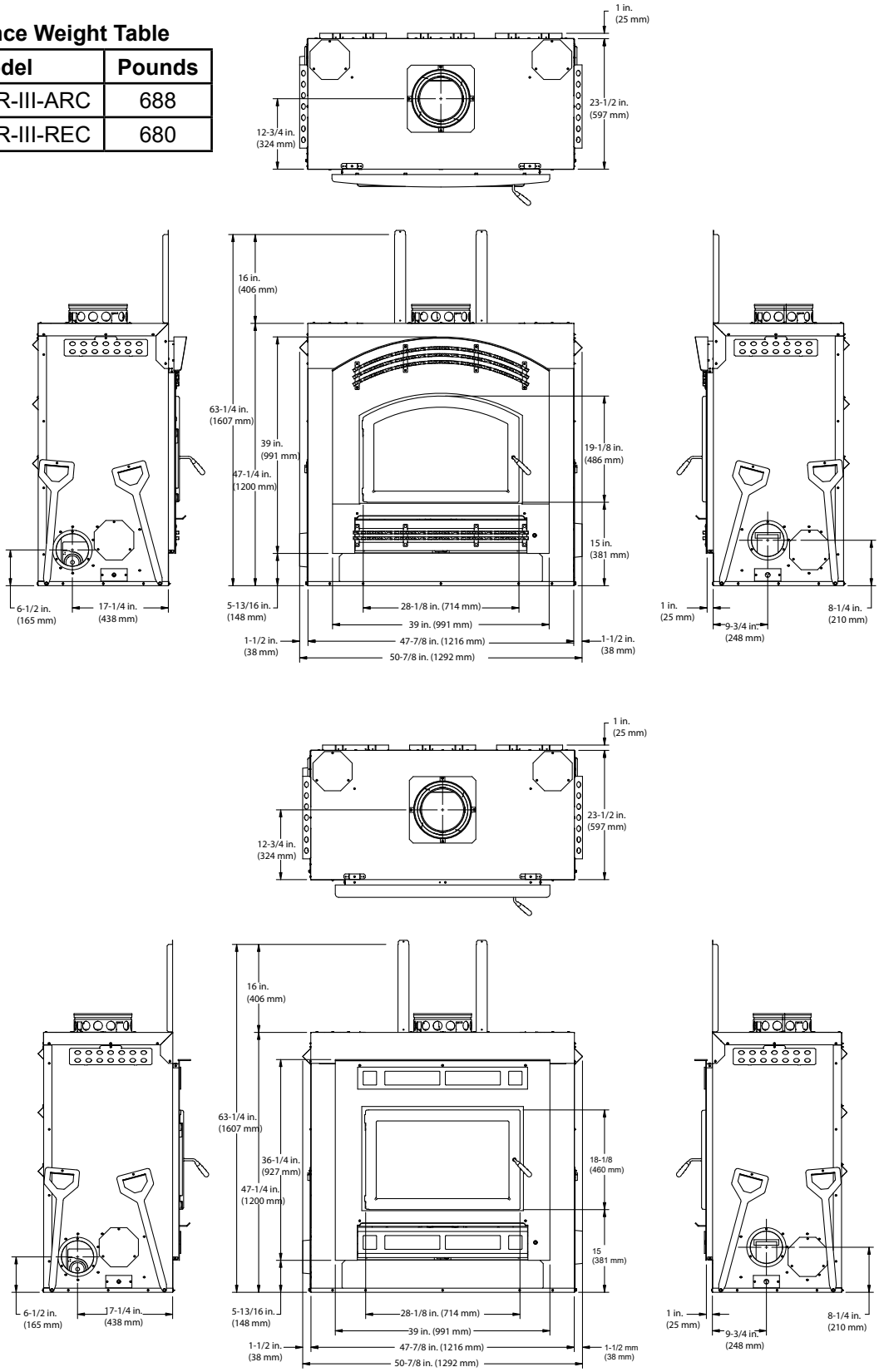

Figure 3.1 Appliance Dimensions

B. Clearances

WARNING! Risk of Fire!

You must comply with all minimum air space clearances to combustibles as specified in Figure 3.2. ***DO NOT*** *pack required air spaces with insulation or other materials. Framing or finishing material used on the front of, or in front of, the fireplace closer than the minimums listed must be constructed entirely of non-combustible materials (i.e., steel studs, concrete board, etc.). Failure to comply may cause fire.*

WITHIN ENCLOSURE AREA	
Fireplace to backwall	1 in. (25 mm)
Fireplace to sidewall	1½ in. (38 mm)
Duct boots to framing	0 in. (0 mm)
Top of fireplace to header	16 in. (406 mm)
Door opening to sidewall	22-3/4 in. (578 mm)
EXPOSED SURFACES	
Faceplate to sidewall	16 in. (406 mm)
Heat zone air grills to ceiling	12 in. (305 mm)
MANTEL	
Non-combustible mantel (see page 38 for details)	46 in. (1168 mm) from the base of the fireplace up
Combustible mantel (see page 38 for details)	66 in. (1676 mm) from the base of the fireplace up
Maximum mantel depth	12 in. (305 mm)

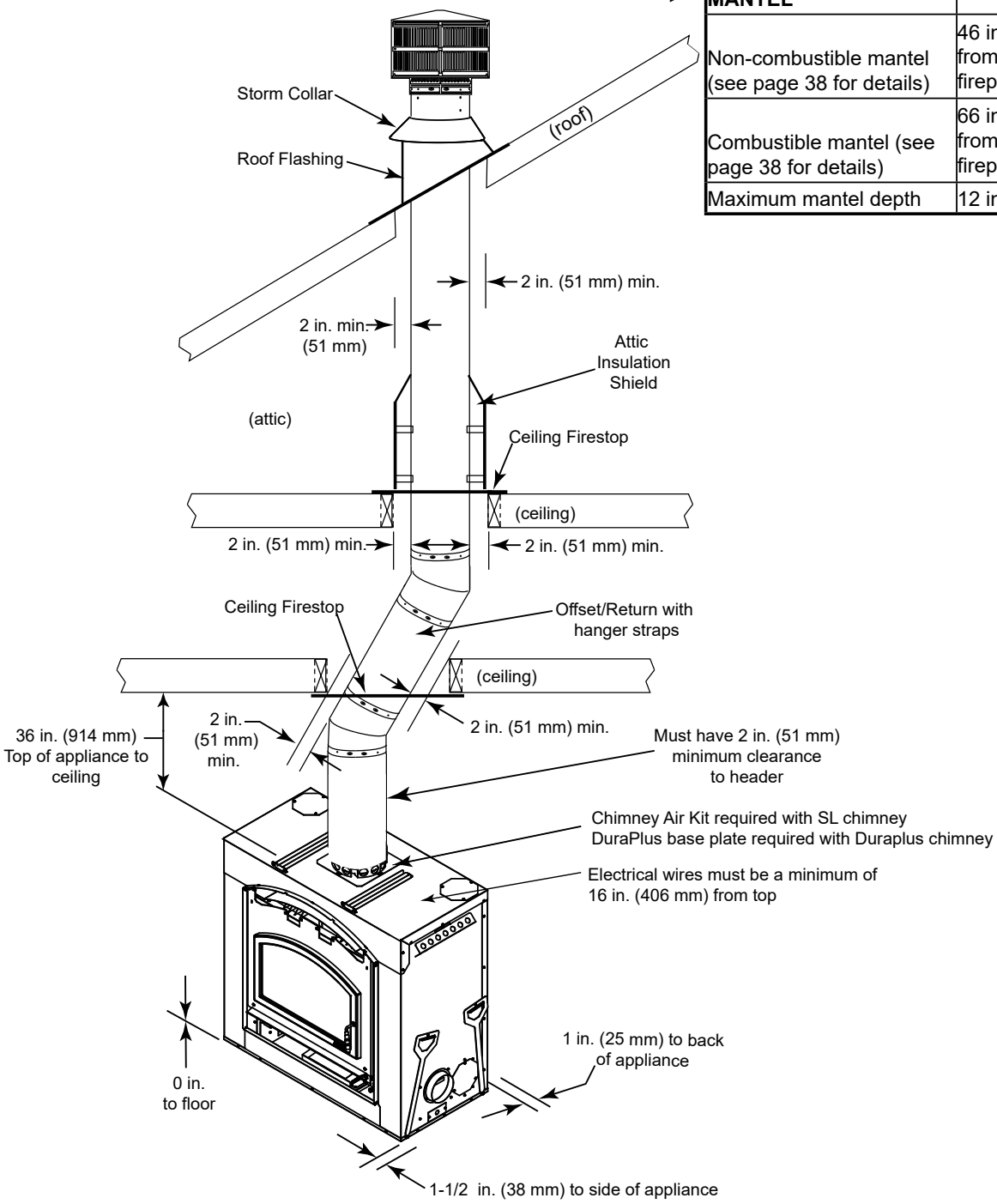

Figure 3.2 Clearances to Combustible Materials

C. Construct the Chase

***WARNING! Risk of Fire! DO NOT** seal area between fire stop opening and chimney pipe except where they enter the attic or leave the warm air envelope of the home (use 600° F sealant).*

***WARNING! Risk of Fire!** You must maintain a minimum 2 in. (51 mm) air space clearance to insulation and framing surrounding the chimney system.*

A chase is a vertical boxlike structure built to enclose the fireplace and/or its vent system. Vertical chimneys that run on the outside of a building must be installed inside a chase. See Figure 3.4.

Construction of the chase may vary with the type of building. Local building codes MUST be followed.

Hearth & Home Technologies recommends:

- The inside surfaces be drywalled and taped (or the use of an equivalent method) for maximum air tightness to the false ceiling.
- In cold climates, the walls of the chase should be insulated to the level of the false ceiling as shown in Figure 3.3. This will help reduce heat loss from the home around the fireplace.
- Holes and other openings should be caulked with high temperature caulk or stuffed with unfaced fiber glass insulation.

- Requirements for constructing the chase:
  - A firestop spacer and attic insulation shield should be installed at the false ceiling.
  - The chase must be properly blocked to prevent blown insulation or other combustibles from entering and making contact with fireplace or chimney.
  - The chase top must be constructed of non-combustible material.

- The chase is constructed using framing materials much the same as the walls in your home. A variety of siding materials may be used including brick, stone, veneer brick, or standard siding materials.
- In constructing the chase, several factors must be considered:
  - Maintain a 2 in. (51 mm) air space around the chimney.
  - The chase top must be constructed of non-combustible material.
  - In cold climates, a firestop spacer and attic insulation shield should be installed in an insulated false ceiling at the 8 ft. (2438 mm) level above the fireplace assembly. This reduces heat loss through the chase.
  - In cold climates, the walls of the chase should be insulated to the level of the false ceiling as shown in Figure 3.4. This will help reduce heat loss from the home around the fireplace.

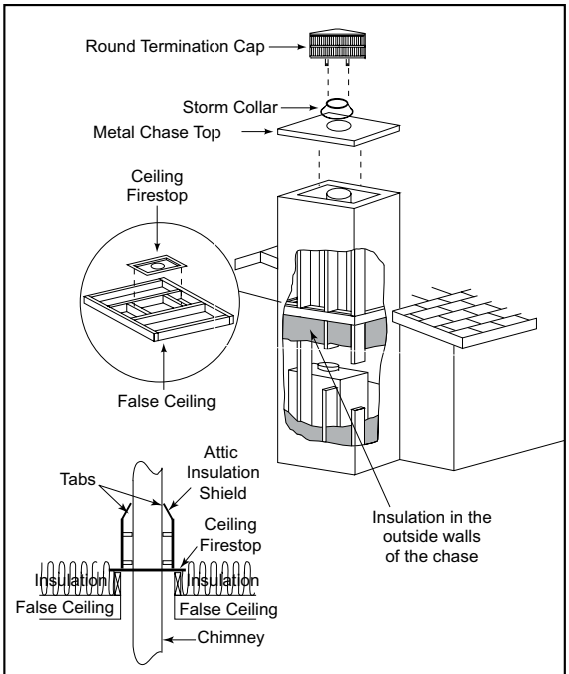

Figure 3.3 Chase Assembly

Three examples of chase applications are shown in Figure 3.4.

1. Fireplace and chimney enclosed in an exterior chase.
2. Chimney offset through exterior wall and enclosed in chase. See Section 9.C for additional offset diagrams.
3. Chase constructed on roof.

All outside walls should be insulated.

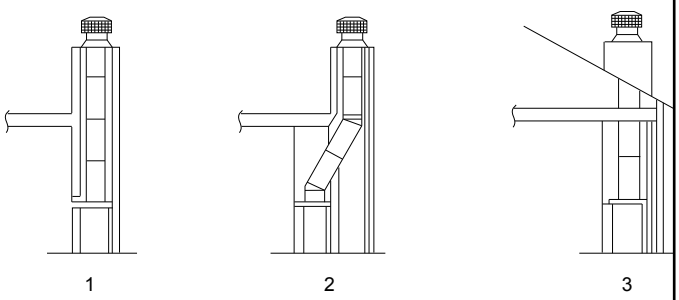

Figure 3.4 Chase Constructions

D. Frame the Fireplace

***WARNING! Risk of Fire!** Comply with all minimum clearances specified.*

- *A minimum 1 in. (25 mm) air clearance must be maintained at the back and 1½ in. (38 mm) to the sides of the fireplace assembly.*
- *Chimney sections at any level require a 2 in. (51 mm) minimum air space clearance between the framing and chimney section.*

***WARNING! Risk of Fire!** You must comply with all minimum air space clearances to combustibles. **DO NOT** pack required air spaces with insulation or other materials.*

NOTICE: Hearth extension design must be determined before installation of fireplace.

NOTE: Before framing up the chase, consider where and how the chimney will run. If there are obstacles that might be in the way, it maybe necessary to make the chase larger than shown to allow for offsets to be used. Refer to offset chart on page 26 if needed.

If the fireplace is placed on the floor, the maximum height of a finished raised hearth (constructed of non-combustible material) is 6-1/4 in. (159 mm) If a higher raised hearth is preferred, the fireplace must be placed on a platform.

NOTICE: Wiring for fans must be done before framed enclosure is completed. If using a Heat Zone Kit, it also must be installed before enclosure is complete.

Standoffs are attached to the fireplace.

The unit can be positioned with the standoffs touching combustible walls or framing but DO NOT pack insulation or other materials in the air space between the fireplace and wall.

Figure 3.3 shows a typical framing (using 2 x 4 lumber) of the fireplace, assuming combustible materials are used. All required clearances to combustibles around the fireplace must be adhered to. See Figure 3.2. Any framing across the top of the fireplace must be above the level of the top non-combustible framing. (No recess above fireplace.)

The finished cavity depth must be no less than 24 in. (610 mm) from the finished back wall to the outside of front wall framing. Framing must extend straight up all the way to the ceiling.

NOTE: Before framing up the chase, consider where and how the chimney will run. If there are obstacles that might be in the way, it may be necessary to make the chase larger than shown to allow for offsets to be used. Refer to offset chart on page 26 if needed.

CAUTION! *Risk of Cuts/Abrasions. Wear protective gloves and safety glasses during installation. Sheet metal edges are sharp.*

E. Secure and Level the Fireplace

This fireplace may be placed on either a combustible or noncombustible continuous flat surface. Follow the instructions for framing in Section 3. Slide the fireplace into position. Be sure to provide the minimum 1 in. air clearance at the sides and 1/2 in. at the back of the fireplace.

The fireplace should be positioned so the face of the non-combustible material on the fireplace will be flush with the face of the drywall on the walls. See Figure 3.6.

Level the fireplace and shim as necessary. Secure the fireplace (using the pallet mounting brackets located on either side of the fireplace) to the sub floor.

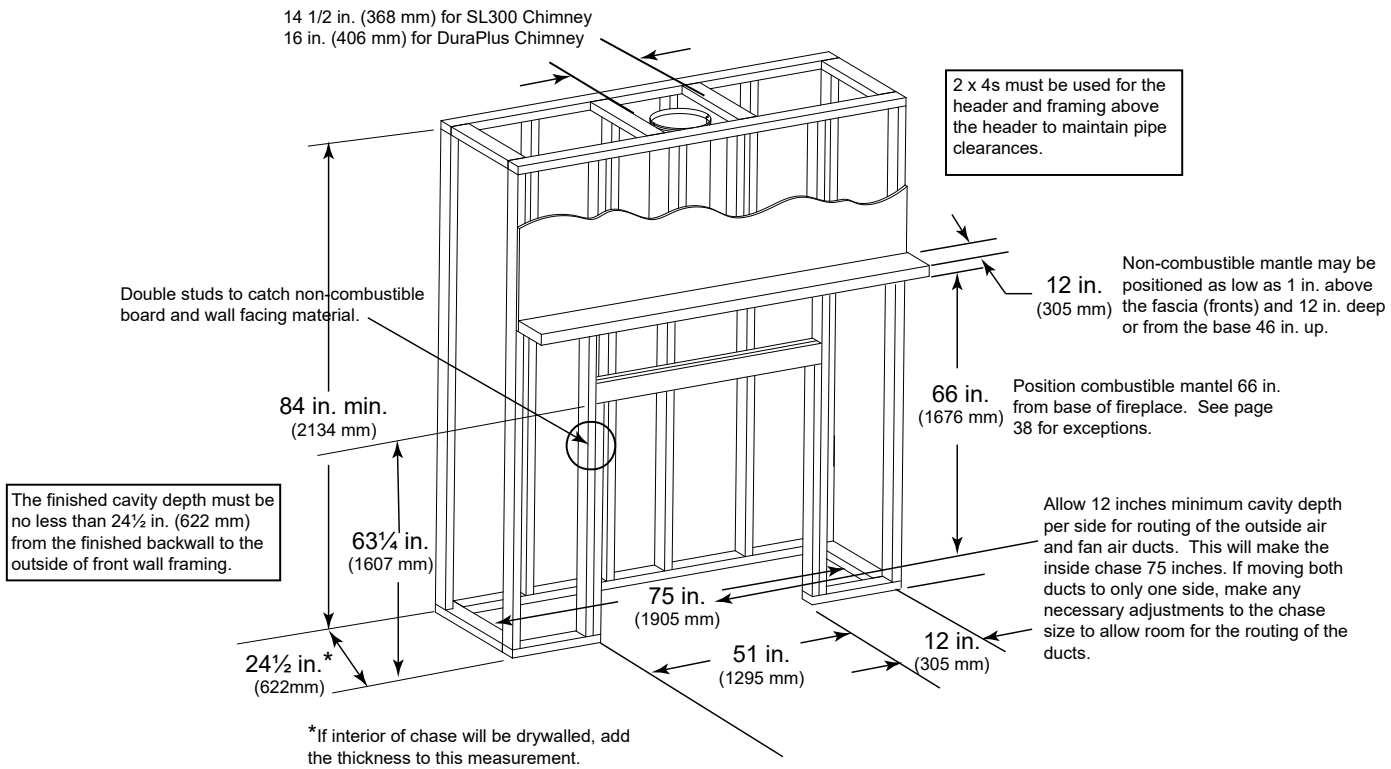

Figure 3.5 Framing the Fireplace

WARNING! Risk of Fire! *Prevent contact with sagging, loose insulation.*

- ***DO NOT*** *install against vapor barriers or exposed insulation.*
- *Secure insulation and vapor barriers.*
- *Provide minimum air space clearances at the sides and back of the fireplace assembly as outlined in Section 3.*

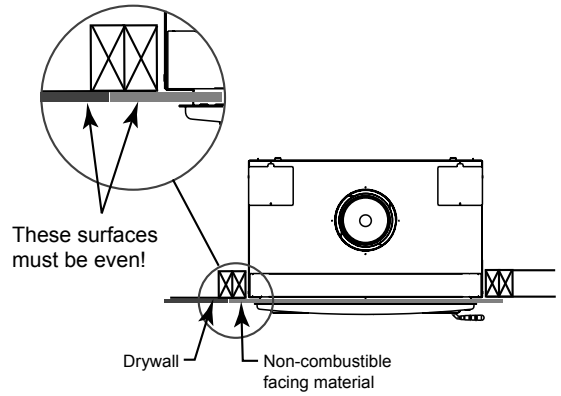

Figure 3.6 Drywall - Non-combustible Facing Material

F. Installation of Top Standoffs

Remove the top front standoffs from the top of the fireplace. See Figure 3.7. Screw the standoffs to the fireplace as shown in Figure 3.8. The top of the standoffs will be screwed to the header.

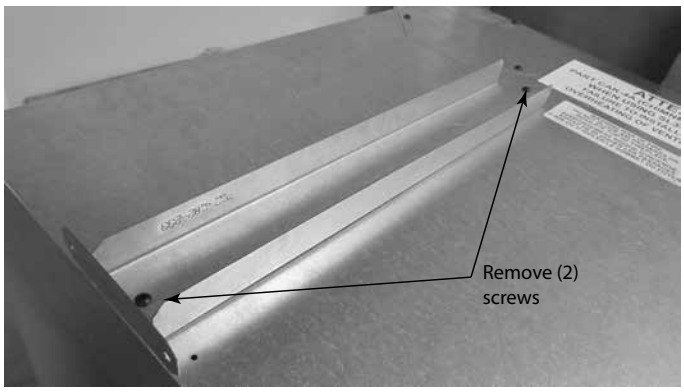

Figure 3.7 Remove Standoffs

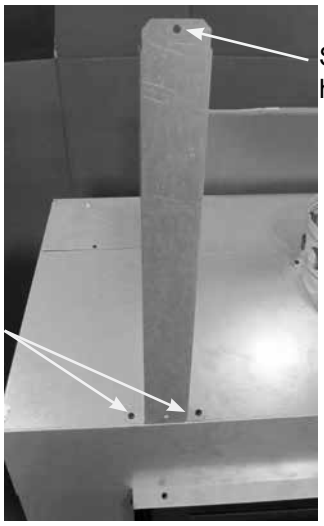

Figure 3.8 Screw Standoffs to Fireplace

G. Protective Metal Hearth Strips

WARNING! Risk of fire! *High temperatures, sparks, embers or other burning material falling from the fireplace may ignite flooring or concealed combustible surfaces.*

- *Protective metal hearth strips MUST be installed over combustible surfaces.*
- *Hearth extensions MUST be installed exactly as specified.*
- Locate the two protective metal hearth strips measuring approximately 26 in. x 4 in. (660 mm x 102 mm) included with this fireplace.
- Slide each metal strip 2 in. (51 mm) under front edge of fireplace.
- Overlap strips in the middle of fireplace opening by 1 in.-(25 mm) minimum.
- Metal strips must extend beyond the front and sides of the fireplace opening by at least 2 in. (51 mm). See Figure 3.6.
- Protect the front of a platform elevated above the hearth extension with metal strips (not included with fireplace) per Figure 3.6. See Section 7 for hearth extension instructions.
- *DO NOT cover metal strips with combustible materials. Sparks or embers may ignite flooring.*

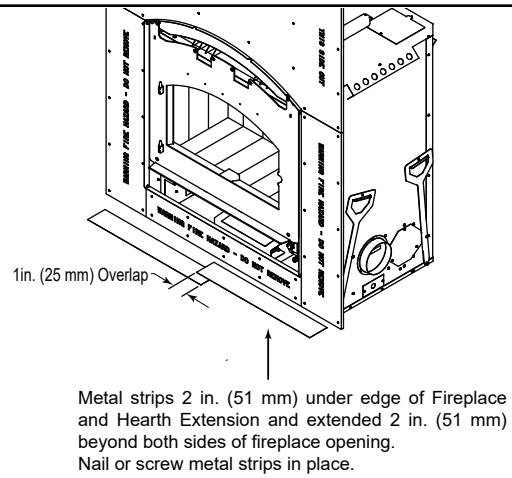

Figure 3.9 Position the Protective Metal Hearth Strips

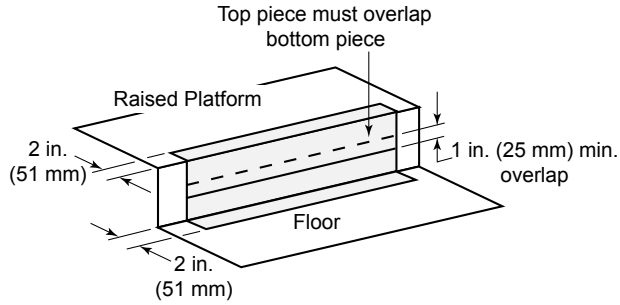

Figure 3.10 Protect the Front of an Elevated Platform

H. Non-Combustible Facing Board (Provided)

WARNING! Risk of Fire!
Follow these instructions exactly.
Facing materials must be installed properly to prevent fire.
No materials may be substituted without authorization by Hearth & Home Technologies.

TOOLS NEEDED: Powered drill with #2 Phillips head bit; caulking gun.

Only non-combustible materials (supplied with fireplace) may be used to cover the metal fireplace front.

> ***NOTE:*** *All boards are pre-drilled for your convenience. Boards MUST be attached in the following order: bottom, sides, and then the top, red-painted side out. The top and bottom board should each have a hang tag attached. Leave them attached for referral for the finishing operation.*

- Attach the bottom board to the bottom of the outer fireplace can with enclosed screws, ensuring the board is centered. **DO NOT remove hang tags**. Attach the side pieces to the outer can and framing members.
- Center and attach the top board to the outer can and framing members. **DO NOT remove hang tags.**

> ***NOTICE:*** *1/8 in. of the facing material may be visible after finishing materials are applied. This 1/8 in. must be painted or the red will show.*

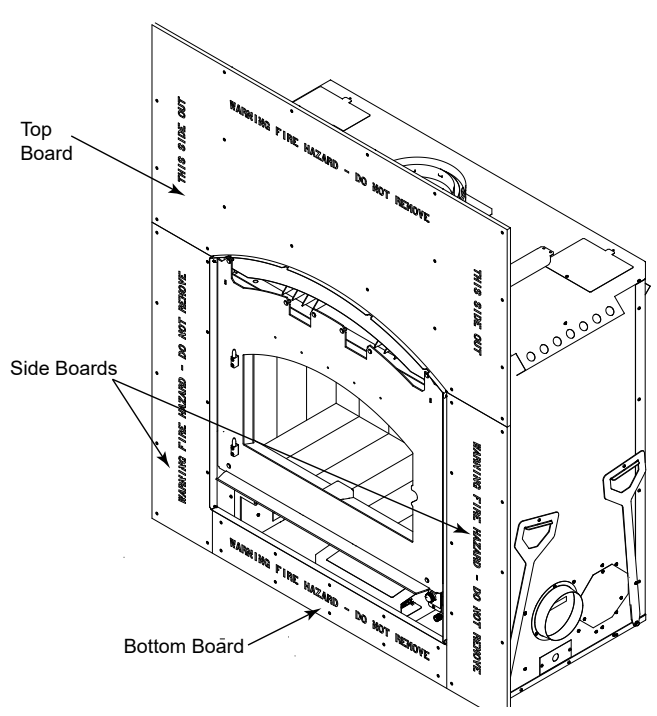

Figure 3.11 Apply Non-combustible Materials

I. Outside Air Kit

An outside air kit must be used for combustion. Hearth & Home Technologies recommends you utilize the shortest duct run and install a P-Trap (see Figure 3.17) to optimize the performance of the outside air kit with a maximum length of 40 ft. The outside air inlet hood should be positioned in a manner that will not allow snow, leaves, etc. to block the inlet. In some installations the air duct may need to be run vertically. In such an installation, a 3 ft (914 mm) height difference must be maintained from the top of the uppermost chimney section to the outside air inlet hood.

Refer to Figures 3.18 and 3.19 when placing the outside air inlet hood.

NOTE: The minimum cross-sectional area of the outside air inlet is 17.5 sq. inches.

The outside air kit comes installed on the right hand side of the fireplace but may be moved to the other side by following these steps:

1. Remove outside air collar (Figure 3.12) and the outside air cover plate (Figure 3.13).
2. Install the cover plate on the right side and the collar on the left side.
3. Open and remove the lower access panel.
4. Remove the two (2) outer screws (Figure 3.15) to allow the outside air box to be removed.
5. Pull the outside air box straight out. See Figure 3.16.
6. On the left side, remove the cover plate two (2) screws. See Figure 3.14.
7. Install the cover plate on the right side where the outside air box was and install the outside air box in through the hole on the left side where the cover plate was.

- Cut a 6-1/2 in. (165 mm) hole in outside wall to accommodate air piping.
- Use 6 in. (152 mm) UL181 Class1 or Class 0 rigid or flexible ducting (not supplied) to directly connect outside air to fireplace intake. Insulate the pipe to prevent frost condensation. See Figure 3.17.
- Insulating the pipe isn't required but will help prevent frost condensation.
- Use the supplied outside air inlet hood.
- Seal between the wall and the pipe with silicone to prevent moisture penetration and air leaks.
- Seal between the outside air inlet hood and the house with silicone to prevent air infiltration.

CAUTION! Risk of Fire or Asphyxiation! DO NOT *draw outside combustion air from wall, floor or ceiling cavity, or enclosed spaces such as an attic or garage.*

- ***DO NOT*** *place outside air inlet hood close to exhaust vents or chimneys. Fumes or odor could be drawn into the room through the fireplace.*
- *Locate outside air inlet hood to prevent blockage from leaves, snow/ice, or other debris. Blockages could cause combustion air starvation.*

CAUTION! Risk of Cuts/Abrasions. *Wear protective gloves and safety glasses during installation. Sheet metal edges are sharp.*

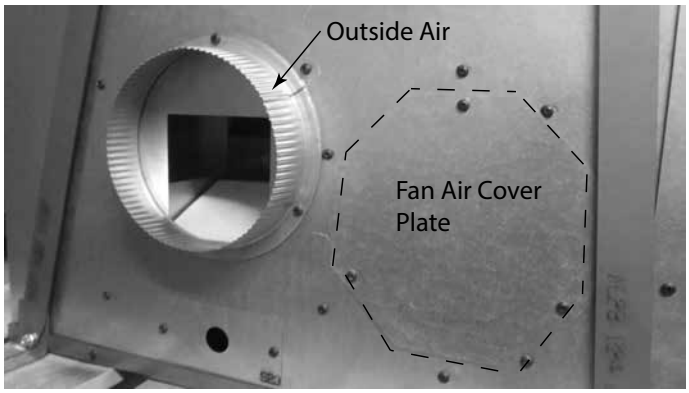

Figure 3.12 Right Side

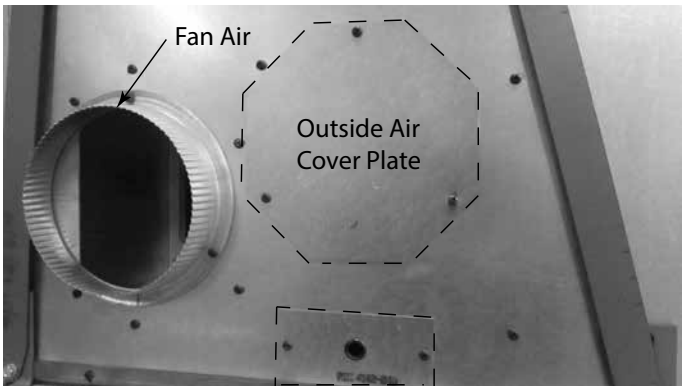

Figure 3.13 Left Side

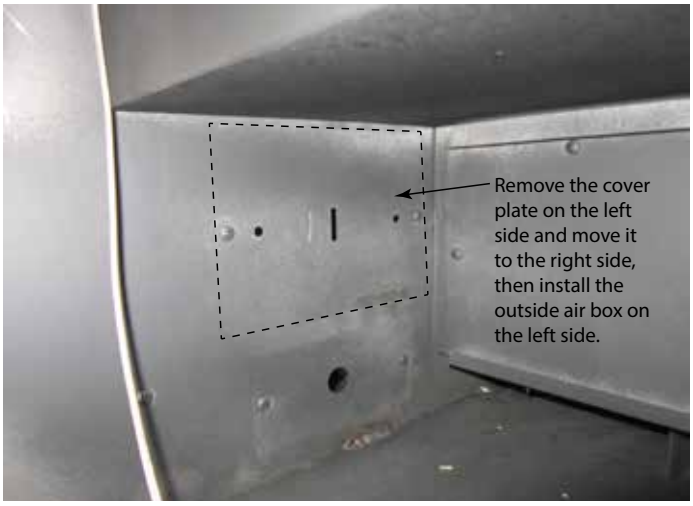

Figure 3.14 Remove Cover Plate (Left Side)

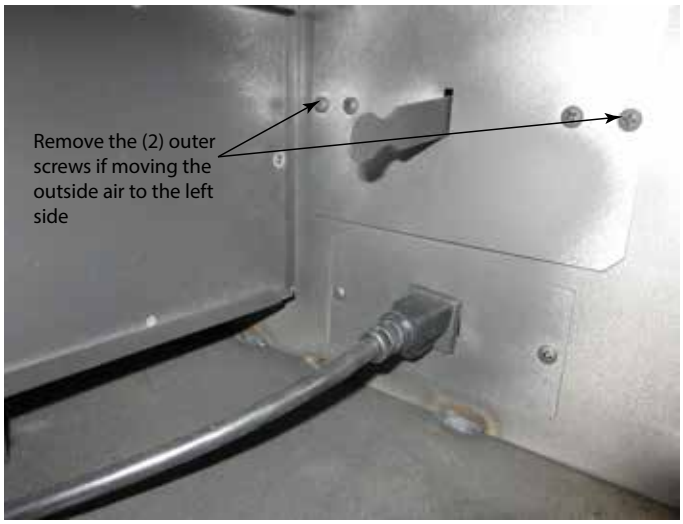

Figure 3.15 Outside air handle shown on right side

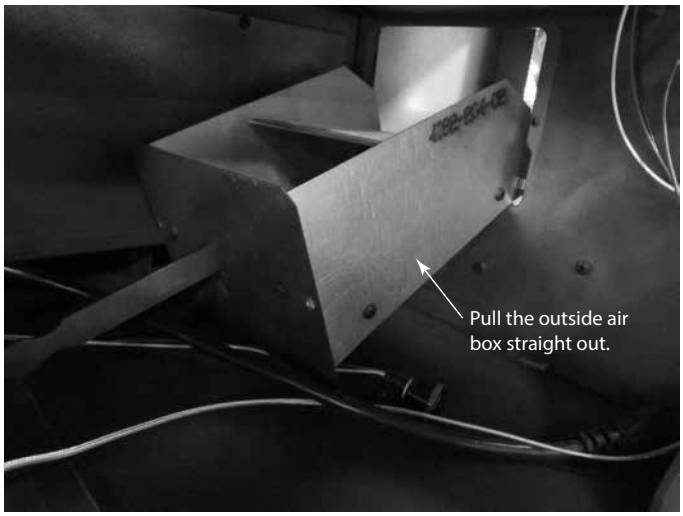

Figure 3.16 Outside Air Box

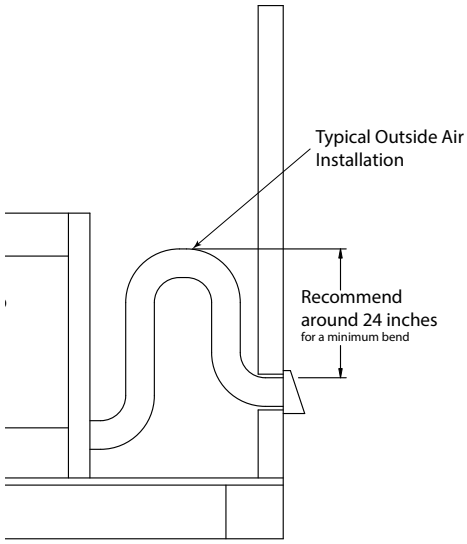

Figure 3.17 Outside Air Installation with Cold Air Trap

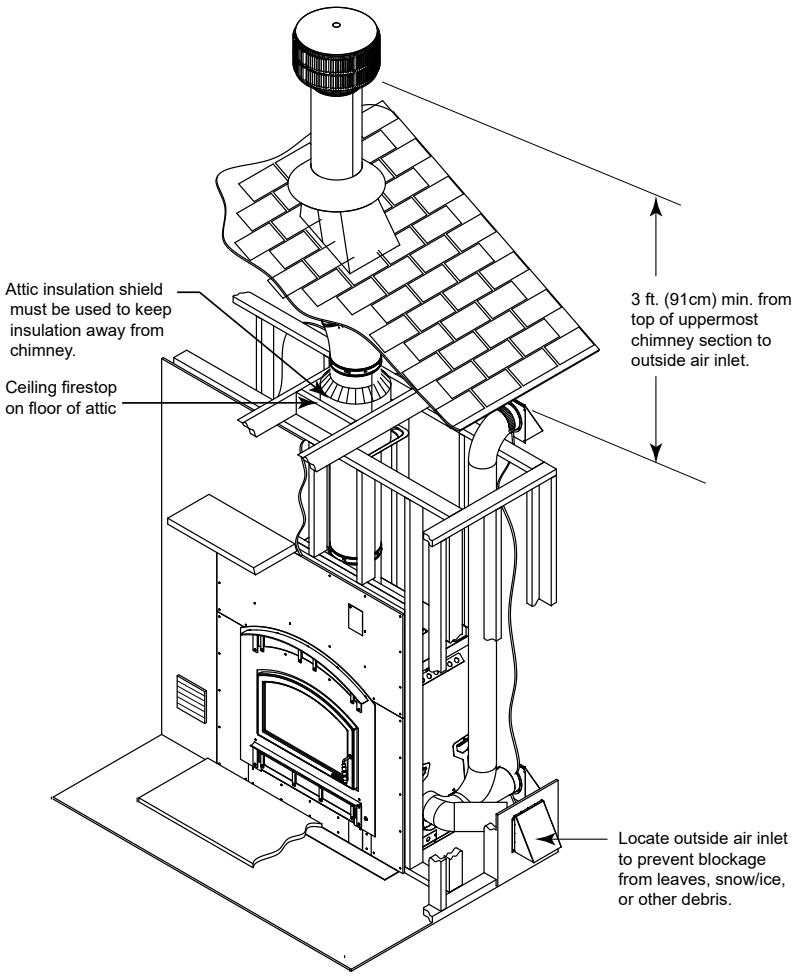

Figure 3.18 Outside Air Inlet Locations

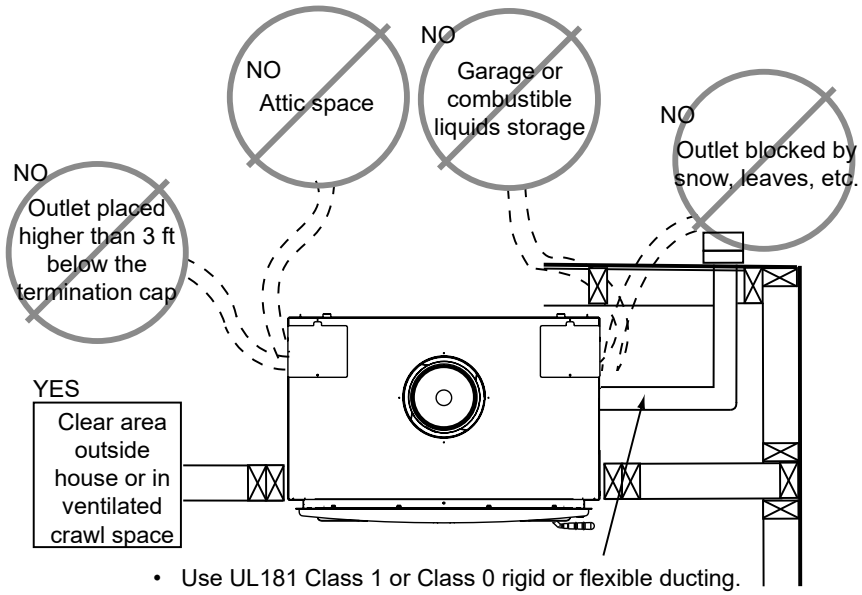

- Use UL181 Class 1 or Class 0 rigid or flexible ducting.
- Install with short run and add a P-trap which will help prevent flow of cold air.
- Secure flex duct with screws or wire ties.

Figure 3.19 Outside Air Installation

J. Fan Air Kit (Required)

The fan air kit is installed on the left hand side of the fireplace but may be moved to the right side. Switch out the collar for the cover plate from side to side. See Figure 3.20 & 3.21.

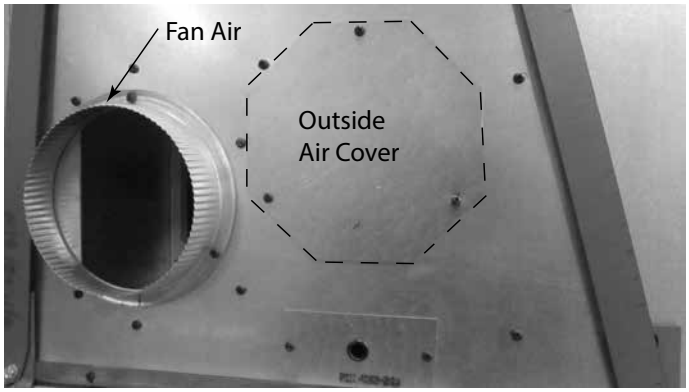

Figure 3.20 Fan Air Left Side Shown

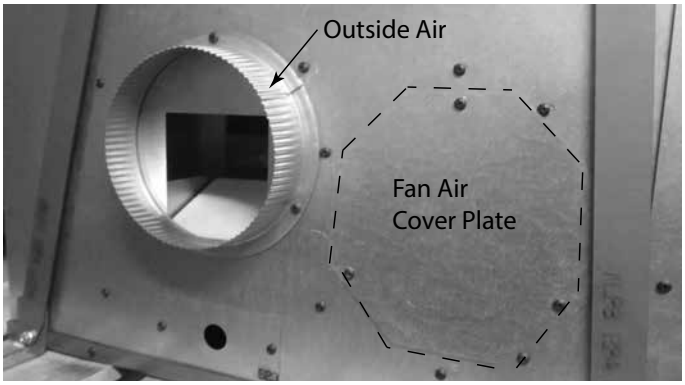

Figure 3.21 Fan Air Cover Plate Right Side Shown

A 6 inch (152 mm) duct must be run to another location in the home and used as a cold air return within the home and distributed thru the fans and into the room where the fireplace is located. See Figure 3.22.

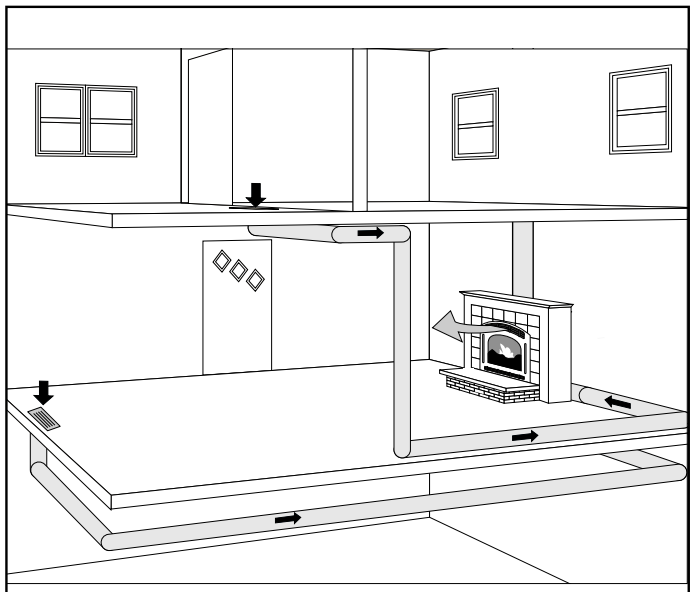

Figure 3.22 Fan air duct may pull air from the same room or a different room up to a max of 40 ft.

To use the wall/ceiling grill (included) requires a 10” x 4” x 6” register boot (not included). A floor register may also be used, but is not included. The ducting must be UL 181 class 0 or 1 in a rigid or flex material. See Figure 3.23.

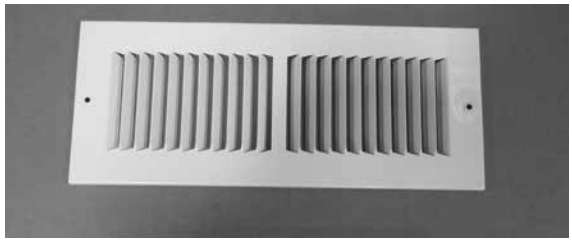

Figure 3.23 Fan Air Grill

K. Heat-Zone-WD-C Kit (Optional)

The Heat-Zone accessory kit conveys warm air from the fireplace through air duct(s) to remote locations in the same room or other rooms of the building. You may install 1 or 2 Heat-Zone kits on the fireplace. Installation of this kit **MUST** be performed by a qualified service technician. If any parts are missing or damaged, contact your local dealer before starting installation. DO NOT install a damaged kit.

This kit is tested and safe when installed in accordance with this installation manual. It is your responsibility to read all instructions before starting installation and to follow these instructions carefully during installations.

The Heat-Zone-WD-C kit is carefully engineered and must be installed only as specified. If you modify it or any of its components you will void the warranty and you may possibly cause a fire hazard. Installation must be done according to applicable local, state, provincial and/or national codes.

Plan the location of the fireplace and warm air duct run(s).

DUCT RUN REQUIREMENTS

MAXIMUM Duct Run = 40-ft. (12 m)
MINIMUM Duct Run = 36 in. (914 mm)

DUCTING MATERIAL

6 in. (152 mm) B-vent Only
DO NOT duct into existing furnace plenum

MINIMUM CLEARANCE TO COMBUSTIBLES

1 in. (25 mm) from the B-vent
0 in. (0 mm) from top & bottom of outlet box
0 in. (0 mm) from the sides of outlet box
12 in. (305 mm) from wall register to ceiling
Refer to Figure 3.24.

CAUTION! *ALL wiring should be done by a qualified electrician and shall be in compliance with local codes and with the National Electric Code NFPA/NEC No. 70-current. CSC22.1 Canadian Electric Code.*

Possible Air Duct Runs / Locations

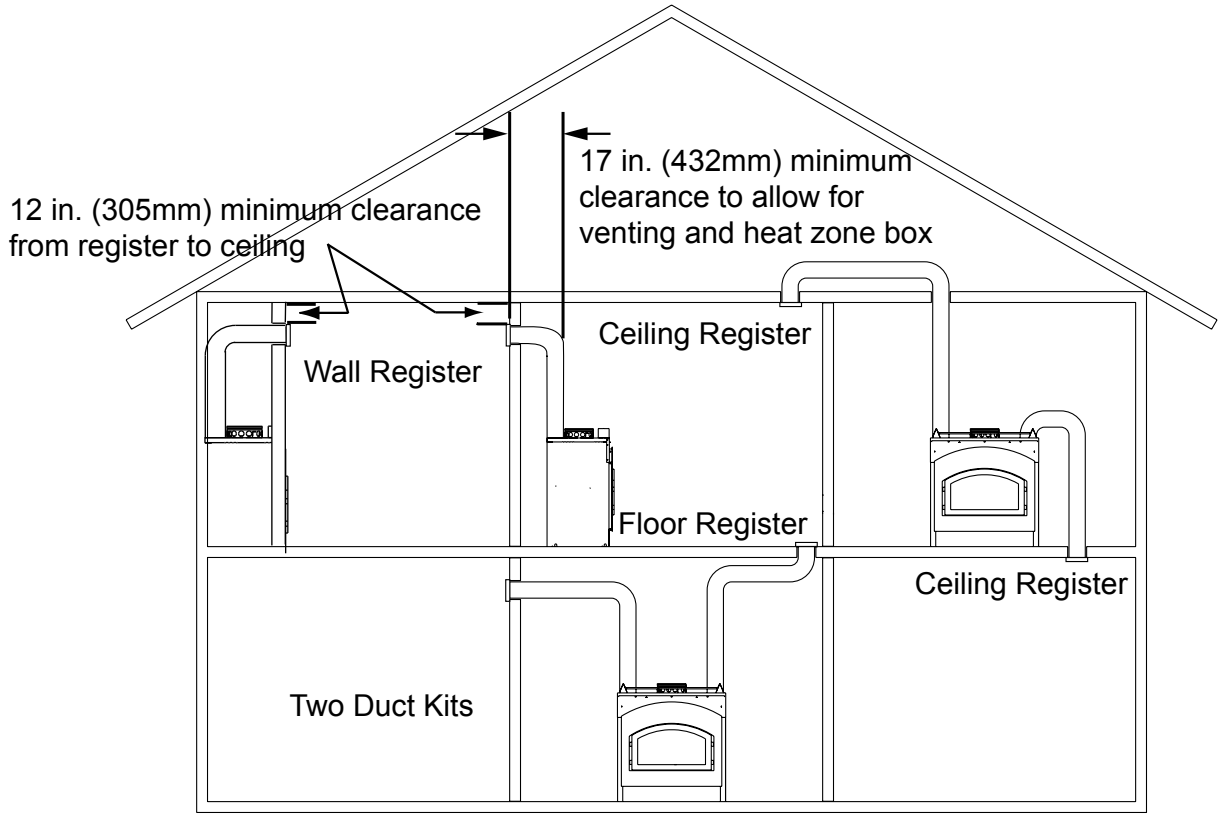

Figure 3.24 Minimum Clearances to Combustibles

Installation

- Remove the knockout or cover plate from the top of the fireplace and discard it. See Figure 3.25.
- Cut a 3 in. (76 mm) hole in the insulation board and remove it as per the dimensions shown in Figure 3.25.

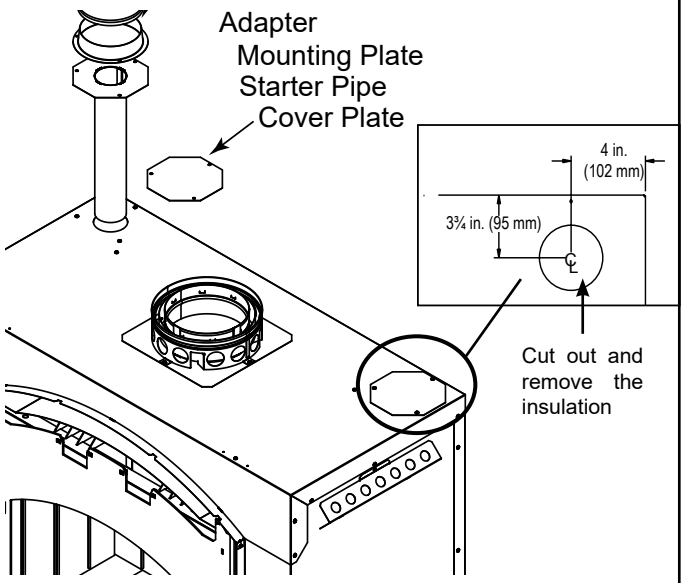

Figure 3.25

- Determine the necessary length of starter pipe from Table 3.1 and cut as required.

Table 3.1

Run Length	Cut Pipe Length
20 - 40 ft (6-12 m)	**2 in. (51 mm)***
**A minimum of 2 in. (51 mm) pipe must be used to cover the raw insulation to prevent it from blowing out through the return air grille.*	
10 - 20 ft (3 - 6 m)	**8 in. (203 mm)**
3 - 10 ft (1 - 3 m)	**12 in. (305 mm)**
NOTE: Do not use full 16 in. (406 mm) as supplied, it must be cut down.	

NOTE: It is important the pipe length be adhered to or it will affect the performance/safety of your fireplace.

- On the mounting plate, hand bend the tabs downward. Slide the tabs over the outside of the starter pipe. Secure with four sheet metal screws included in fasteners package. Figure 3.26.

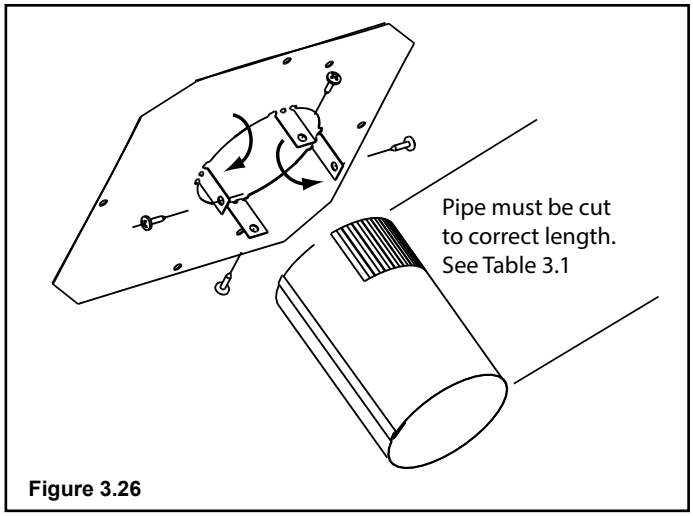

Figure 3.26

- Slide the starter pipe into the fireplace, matching the holes in the plate to the holes on the fireplace.
- Place the adapter on the mounting plate lining up holes. Using four sheet metal screws included in the kit, secure the adapter and mounting plate to the fireplace. After securing to the fireplace, tape down the adapter edges to the top of the fireplace with aluminum tape to prevent leakage.
- Determine the location for the air register and fan housing assembly. Cut a 6-3/4 in. x 13-1/8 in. (213 mm x 333 mm) hole between framing members (wall studs or floor joists). Attach the brackets to the fan housing with the screws provided. The brackets can be rotated 180° and mounted to the back side of the 2 x 4 if necessary. See Figure 3.27.

NOTICE: *The fan and electrical connections must be accessible for servicing per local code requirements.*

- Attach enough 6 in. (152 mm) B-Vent as required for your installation to the fan housing. **A maximum of (4) 90° elbows are allowed.** Screw the B-vent to the adapter. Also screw the B-vent to the outlet box on the fan housing. See Figure 3.26. Support duct at intervals of no greater than 4 ft (1 m) as required by local code.

WARNING! Risk of Fire! *Comply with all minimum clearances specified.*

- *A minimum 1 in. (25 mm) air clearance must be maintained at the back and 1½ in. (38 mm) to the sides of the fireplace assembly.*

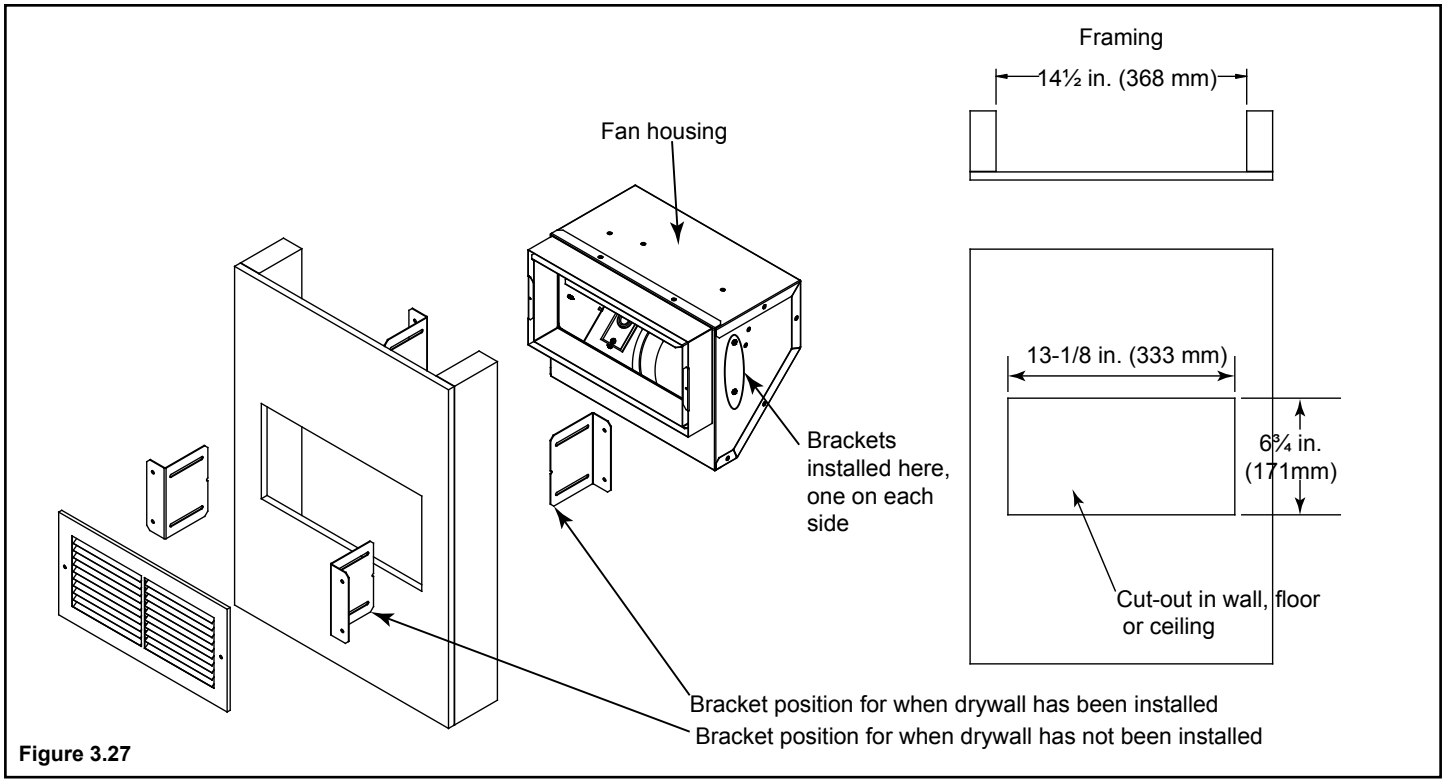

Figure 3.27

NOTICE: *Secure the duct so that clearance to the fireplace outer wrap is maintained. Tape all seams with aluminum tape 1-1/4 in. (32 mm) minimum width or as specified by local codes.)*

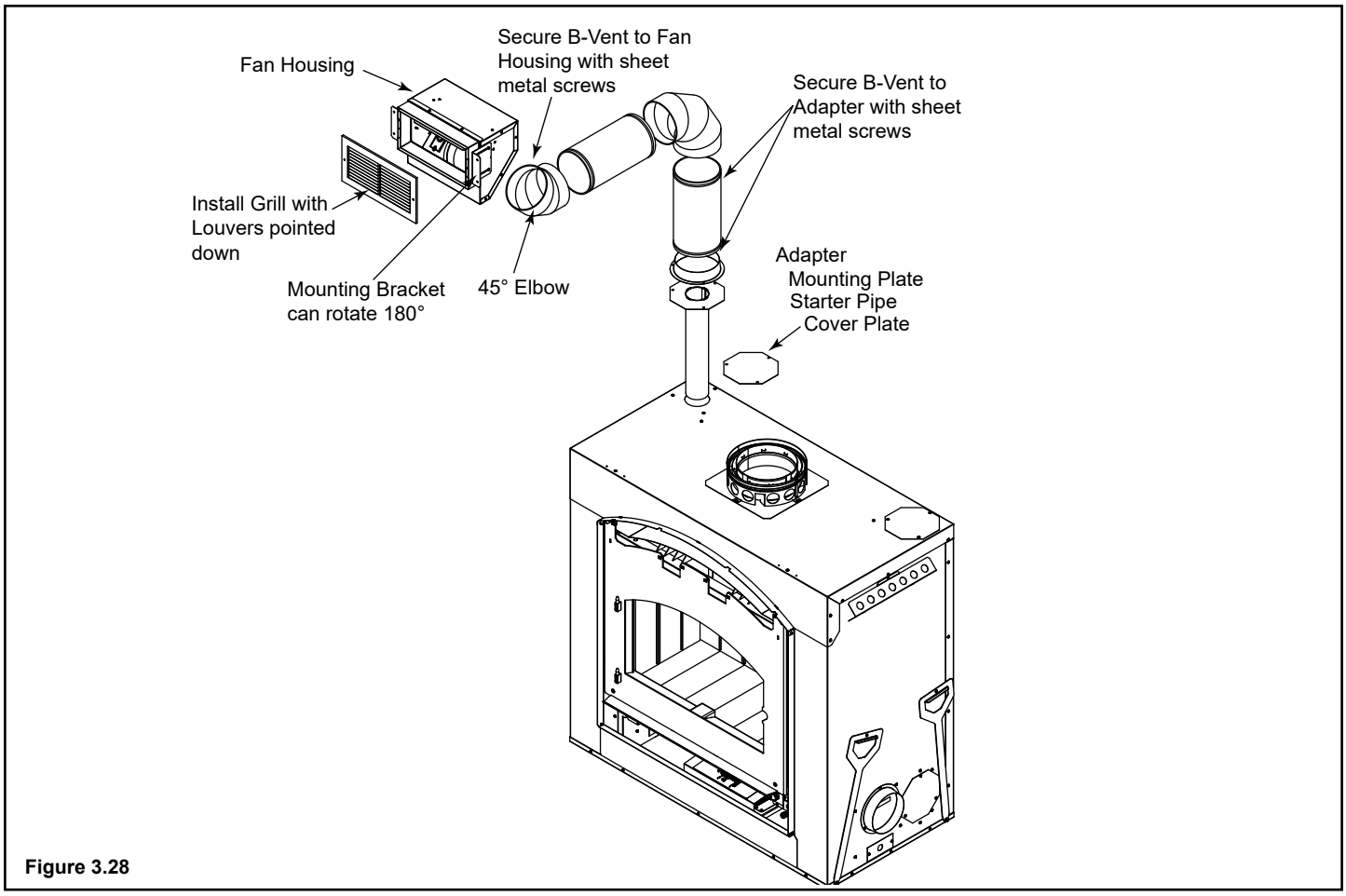

Figure 3.28

Installing Fan In Housing

- Attach the (2) wires to the spade terminals on the motor.
- Insert fan into the fan housing starting with motor end first. Slip it below the "L" mounting bracket on the left side allowing the right side to drop in. See Figure 3.29.

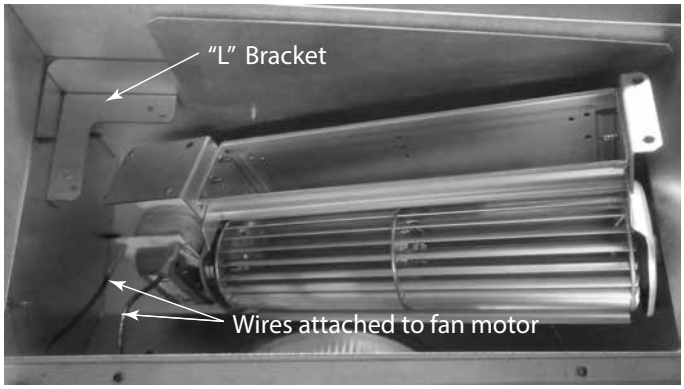

Figure 3.29

- Tilt the fan forward to clear the mounting brackets then lift the fan onto the brackets. See Figure 3.30.

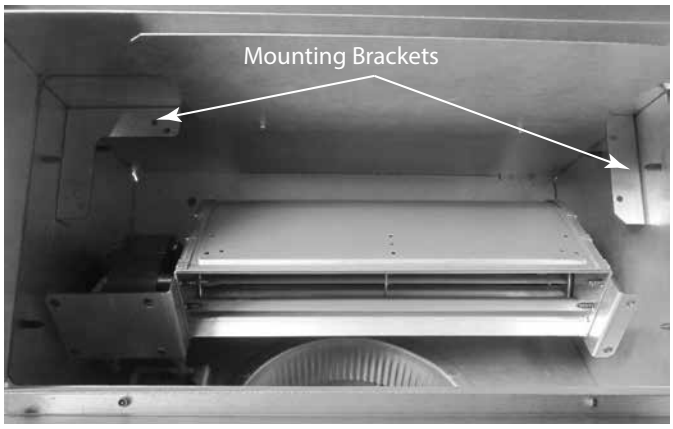

Figure 3.30

- Secure the fan to the mounting brackets with (4) screws provided. See Figure 3.31.

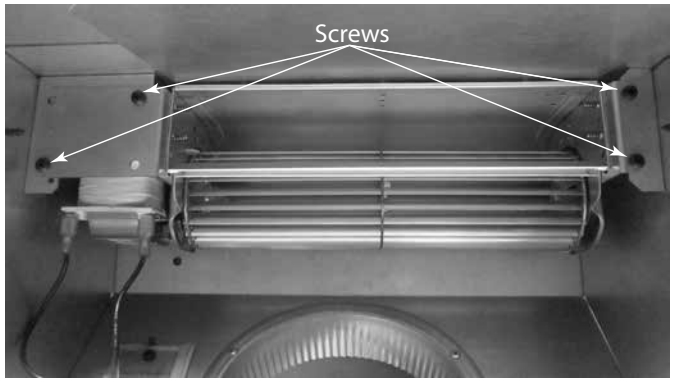

Figure 3.31

- Insert the fan wires through the grommet and into the junction box. See Figure 3.32.

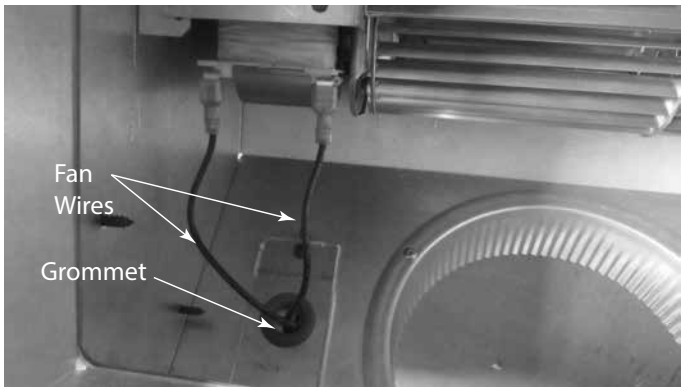

Figure 3.32

- Install the variable speed wall rheostat (with setting on "OFF") in a convenient location. This switch will control the Heat-Zone fan operation.
- Remove the junction box. Wire 110 VAC service TO the wall rheostat and FROM the wall rheostat to the fan junction box. Use wire nuts to secure the 110 VAC service wires to the hot (black) and neutral (white) fan wires and screw the 110 VAC ground wire to the junction box. See Figure 3.33.
- Secure the return air grille to the fan housing making sure it is flush. The grille must be installed with the louvers pointing down.

NOTICE: *DO NOT USE ADJUSTABLE REGISTERS.*

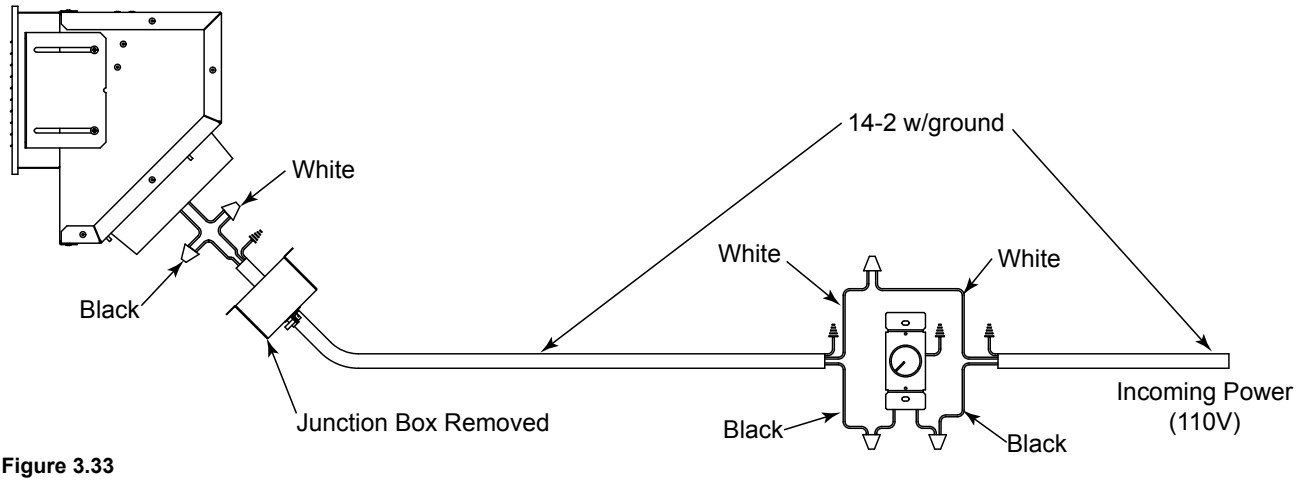

Figure 3.33

4 Electrical Wiring

A. Fireplace

NOTICE: *You will need to supply: 14-2 wire with ground and wire nuts.*

- Remove junction box cover plate on the bottom right side of the fireplace to access the outlet wires. See Figure 4.1 & 4.2. NOTE: The power may enter from either side by switching the cover plates on the outer shell and switching the outlet plate in the bottom access area to the other side. See Figure 4.4.
- Attach the romax connector to the cover plate and insert the 14-2 WG through it and make the wire connections.
- Match colors to wire harness, black to black, white to white, green to green (ground) and secure with wire nuts.
- Install cover plate. See Figure 4.3.

NOTICE: *Wiring for fireplace must be done before framed enclosure is completed. If using a Heat Zone kit, it also must be installed before enclosure is complete.*

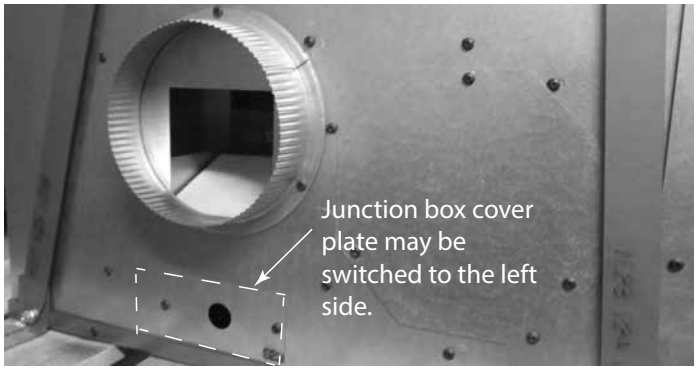

Figure 4.1 Junction Box Cover Plate (Right side shown)

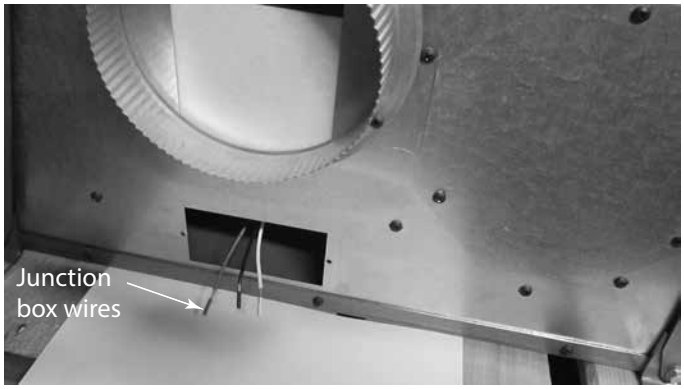

Figure 4.2 Junction Box Wires

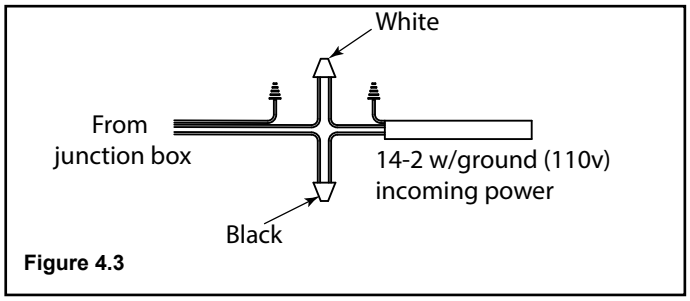

Figure 4.3

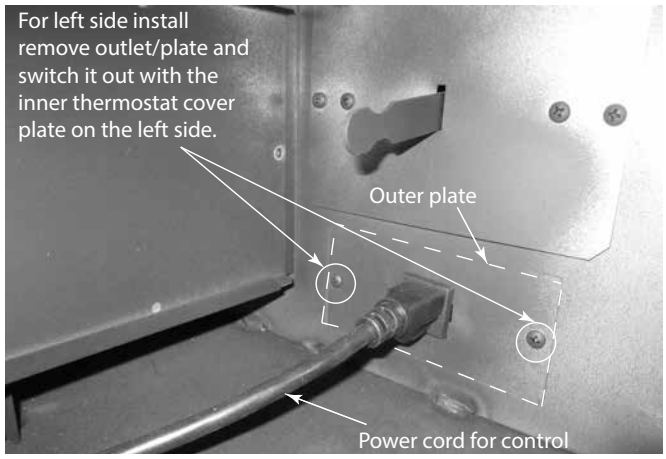

Figure 4.4 Junction Box Shown on Right Side

5 Chimney and Termination Requirements

A. Chimney Requirements

Vertical distances are measured from the base of the fireplace as shown in Figure 5.1.

Table 5.1 Chimney Requirements

Minimum overall straight height	*13 ft*	*3.96 m*
Minimum height with single offset/ return	*14.5 ft*	*4.42 m*
Double offset/return minimum height	*20 ft*	*6.1 m*
Maximum height	*90 ft*	*25.60 m*
Maximum chimney length between an offset and return	*20 ft*	*6.1 m*
Maximum distance between chimney stabilizers	*35 ft*	*10.67 m*
Maximum unsupported chimney length between the offset and return	*6 ft*	*1.83 m*
Maximum unsupported chimney height above the fireplace	*35 ft*	*10.67 m*
Maximum unsupported chimney above roof	*6 ft*	*1.83 m*

NOTICE: *A maximum of two pairs of offsets and returns may be used.*

WARNING! Risk of Fire! *You must maintain 2 in. (51 mm) air space clearance to insulation and other combustible materials around the chimney system. Failure to do so may cause overheating and fire.*

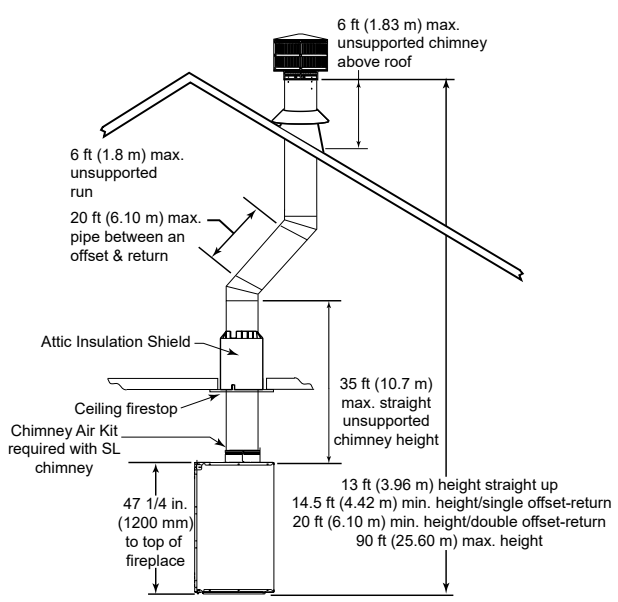

Figure 5.1 Chimney Requirements

NOTICE*: You must provide support for the pipe during construction and check to be sure inadvertent loading has not dislodged the chimney section from the fireplace or at any chimney joint.*

Table 5.2 Chimney Component Dimensions

HEIGHT OF CHIMNEY COMPONENTS		*in.*	*mm*
Chimney Stabilizer			
	SL3	4-3/4	121
Offsets/Returns			
	SL315	13-3/8	340
	SL330	15-1/2	394
Chimney Sections*			
	SL306	4-3/4	121
	SL312	10-3/4	273
	SL318	16-3/4	425
	SL324	22-3/4	578
	SL336	34-3/4	883
	SL348	46-3/4	1187

*** Dimensions reflect effective height.**

Note: 8 in. DuraPlus can also be used.

B. Offsets/Returns

A 30° Elbow (measured from the vertical) is the largest that can be used in an offset. A 30° Elbow may not be combined with another Elbow to make a steeper offset (e.g. two 30° Elbows are not allowed to be put together to form a 60° elbow.). Avoid Elbows if possible. A totally vertical chimney is more efficient. When Elbows are necessary to avoid obstructions such as rafters, ridgepoles, or joists, you are only allowed to use 2 pair of Elbows in any one chimney system. Horizontal runs of chimney violate building code and are not allowed.

- An offset and return can be used as a single entity or separated by chimney section(s).

  ***WARNING! Risk of Fire! DO NOT** use offset/returns greater than 30° from vertical. Chimney draft will be restricted and could cause overheating and fire.*

- Measure the shift needed to avoid the overhead obstruction. Refer to dimension A in Figure 5.2.
- Find the appropriate A dimension listed in Table 5.3. The B dimension coinciding with the A dimension measurement in Table 5.3 represents the required vertical clearance needed to complete the offset/return.
- Read across the chart to find the number of chimney sections/model numbers needed between the offset and return.

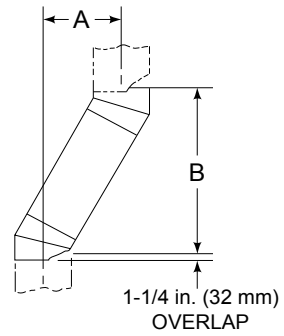

Figure 5.2 Chimney Offset/Return

Example:

Your "A" dimension from Figure 5.2 is 14-1/2 in. (368 mm). Using Table 5.3 the dimension closest to, but not less than 14-1/2 in. (368 mm) is 14-1/2 in. (368 mm) using a 30° offset/return.

You determine from the table that you need 34-1/8 in. (867 mm) (Dimension "B") between the offset and return.

The chimney component that best fits your application is one SL324.

Table 5.3 Offset Dimensions

15-degree				30-degree									
A		B		A		B							
in.	*mm*	*in.*	*mm*	*in.*	*mm*	*in.*	*mm*	SL306	SL312	SL318	SL324	SL336	SL348
1 5/8	41	13 3/8	340	3 5/8	92	15 1/2	394	-	-	-	-	-	-
2 7/8	73	17 3/4	451	5 1/2	140	18 5/8	473	1	-	-	-	-	-
4 1/8	102	22 3/8	568	7 1/4	184	21 3/4	552	2	-	-	-	-	-
4 1/2	114	23 5/8	600	8 1/2	216	23 3/4	603	-	1	-	-	-	-
5 3/4	146	28 1/4	718	10 1/4	260	27	686	1	1	-	-	-	-
6	152	29 3/8	746	11 1/2	292	29	737	-	-	1	-	-	-
7 1/4	184	34	864	13 1/4	337	32 1/8	816	-	2	-	-	-	-
7 3/4	197	36 1/8	918	14 1/2	368	34 1/8	867	-	-	-	1	-	-
8 3/4	222	39 3/4	1010	16 1/4	413	37 3/8	949	1	-	-	1	-	-
10 3/8	264	45 5/8	1159	19 1/4	489	42 1/2	1080	-	-	2	-	-	-
10 5/8	270	46 3/4	1187	20 1/2	521	44 5/8	1133	-	-	-	-	1	-
11 7/8	302	51 3/8	1305	22 1/4	565	47 3/4	1213	1	-	-	-	1	-
13 1/2	243	57 1/4	1454	25 1/4	641	52 7/8	1343	-	-	-	2	-	-
13 3/4	349	58 3/8	1483	26 1/2	673	55	1397	-	-	-	-	-	1
15	381	63	1600	28 1/4	718	58 1/8	1476	1	-	-	-	-	1
16 1/2	419	68 3/4	1746	31 1/4	794	63 1/4	1607	-	1	-	-	-	1
18	457	74 5/8	1895	34 1/4	870	68 1/2	1740	-	-	1	-	-	1
19 5/8	498	80 3/8	2042	37 1/4	946	73 3/4	1873	-	-	-	1	-	1
20 5/8	524	84 1/8	2137	39 1/8	994	76 7/8	1953	1	-	-	1	-	1
22 3/4	578	91 7/8	2334	43 1/4	1099	84 1/8	2137	-	-	-	-	1	1
24	610	96 1/2	2451	45 1/8	1146	87 1/4	2216	1	-	-	-	1	1
25 7/8	657	103 1/2	2629	49 1/4	1251	94 1/2	2400	-	-	-	-	-	2

Proper assembly of air-cooled chimney parts result in an overlap at chimney joints of 1-1/4 in. (32 mm). Effective length is built into this chart.

C. Termination Requirements

- Install a cap approved and listed for this fireplace system.
- Locate cap where it will not become plugged by snow or other materials.
- Locate cap away from trees or other structures.
- The bottom of the termination cap must be at least 3 ft (.91 m) above the roof AND at least 2 ft (.61 m) above any portion of roof within 10 ft (3.05 m) as shown in Figure 5.3.
- The distance required between caps is shown in Figure 5.3.

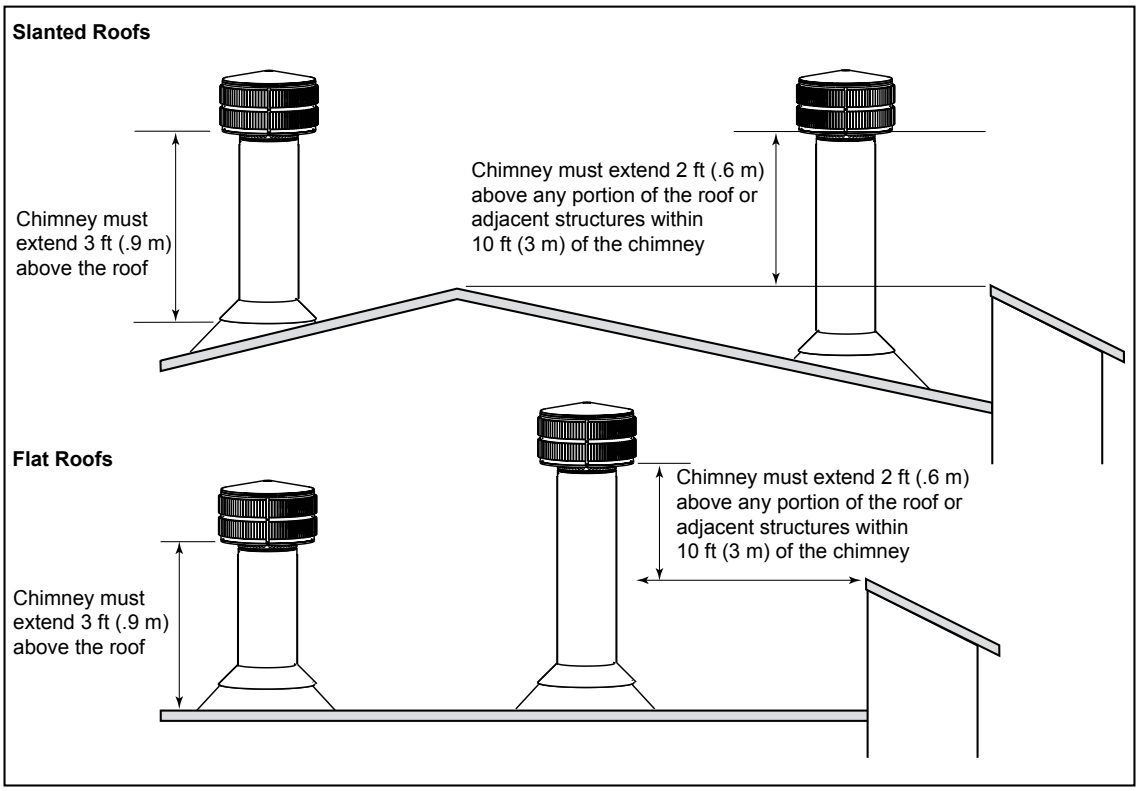

Multiple Chimney Locations

A	B
6 in. (minimum) up to 20 in. *152 mm/508 mm*	18 in. minimum *457 mm*
20 in. and over	0 in. minimum

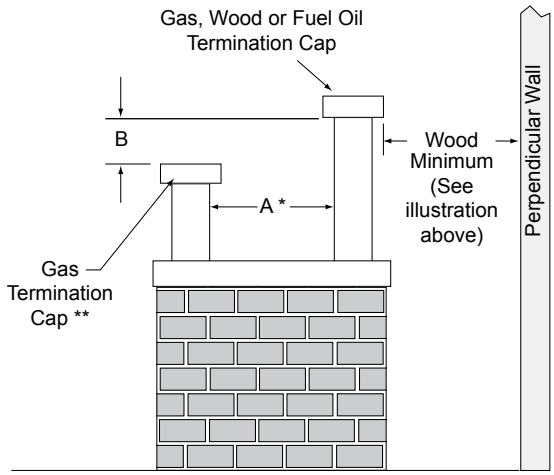

* If using decorative cap cover(s), this distance may need to be increased. Refer to the installation instructions supplied with the decorative cap cover.

** In a staggered installation with both gas and wood terminations, the wood termination cap must be higher than the gas termination cap.

Figure 5.3 Multiple Chimney Locations

6 Chimney Installation

A. Typical Chimney System

NOTICE: *Chimney performance may vary.*

- *Trees, buildings, roof lines and wind conditions affect performance.*
- *Chimney height may need adjustment if smoking or overdraft occurs.*

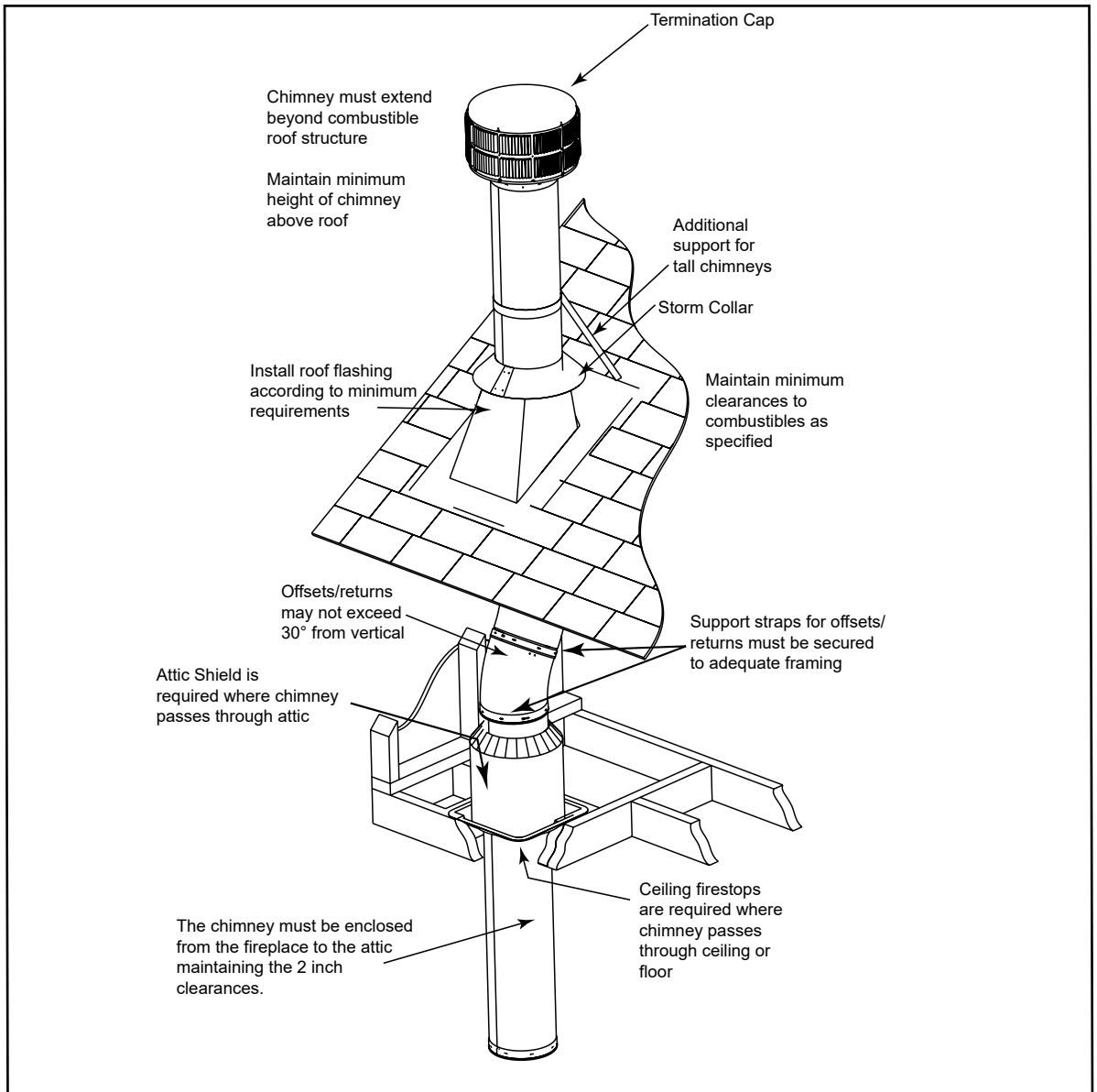

Figure 6.1 Typical Chimney System - Guidelines for Chimney System Installation

The SL300 series chimney (UL127 approved for use with this fireplace) is shipped with wrap around warning labels installed. These labels may be removed from the sections of chimney exposed above the roofline.

B. Assemble Chimney Sections

***WARNING! Risk of Fire! DO NOT** install substitute or damaged chimney components.*

Use only those components described in this manual.

Attach either a straight chimney section or an offset to the top of the fireplace starting with the inner flue followed by the outer casing. Continue this order until termination cap is reached (depending on your installation requirement). Chimney sections are locked together by pushing downward until the top section meets the stop bead on the lower section.

The inner flue is placed to the inside of the flue section below it. The outer casing is placed outside the outer casing of the chimney section below it. See Figure 6.2.
***NOTICE:** Chimney sections cannot be disassembled once locked together. Plan ahead!*

- Lock chimney sections and/or offsets/returns together by pushing downward until the top section meets the stop bead on the lower section.
- Pull on the topof each section as installed to make sure it is fully engaged and will not separate.
- You may use #6 or #8 sheet metal screws no longer than 1/2 in. (13 mm) to fasten chimney outer sections together. Do NOT penetrate inner flue.
- Vertical straight runs of chimney must be supported every 35 ft (10.7 m).

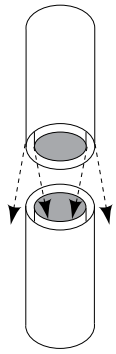

Figure 6.2 Assembling Chimney Sections

***WARNING! Risk of Fire! DO NOT** install substitute or damaged chimney components.*

C. Install Chimney Air kit (CAK4A)

***NOTICE:** Chimney Air Kit, Part CAK4A is required when using the SL-300 Pipe Series. Detailed instructions are supplied with the kit. If using the Dura-Plus System (must be 8 in./203 mm in diameter), the starter ring that came with the fireplace must be removed and replaced with the Dura-Plus Base Plate. The CAK4A is not required with a Dura-Plus System.*

- Install the chimney pipe first.
- Hand bend the tabs in position before placing on the fireplace.
- Place the box on top of the fireplace around the chimney pipe, push both pieces together and secure with screws provided.
- Use the pre-punched holes in the tabs as guides and drill holes through the fireplace top.
- Secure the CAK4A in place. See Figure 6.3.
- Seal around the kit at the flue and at the top of the can with high temp caulk with a minimum rating of 500 degrees. See Figure 6.3.

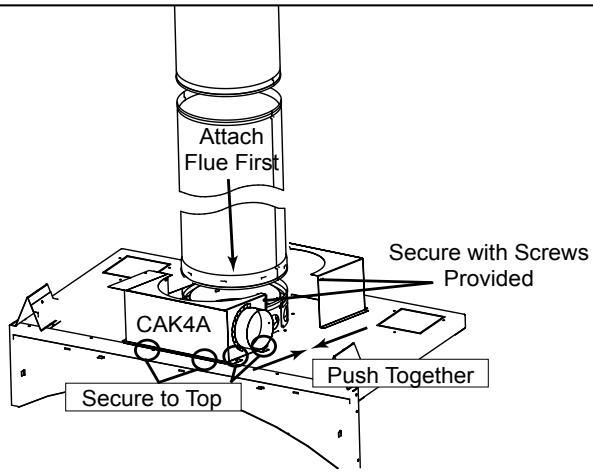

Figure 6.3 Installing the CAK4A

NOTES:
- The CAK4A termination cap must be a minimum of 4 ft (1219 mm) above the ground and kept free of debris.
- If the CAK4A is installed in a chase, the CAK4A side termination cap must be at least 3 ft (914 mm) below the chimney top.
- Seal around the cap and flex with caulk to stop air from getting into the chase. See Figure 6.4.
- The pipe cannot lay on top of the unit.

WARNING! Risk of Fire!

- *The flex pipe must never be compressed or deformed!*
- *Restricting the airflow inside the flex pipe may increase flue pipe temperatures causing a chase fire.*

P Traps

When using the chimney air kit (CAK) and the outside air kits, it is recommended that you install a P trap as shown in Figure 6.4 by bending the flex duct, or using 90° elbows iif using rigid duct to help prevent air circulation when the fireplace is not in use. In colder climates, it is strongly recommended to use an insulated duct.

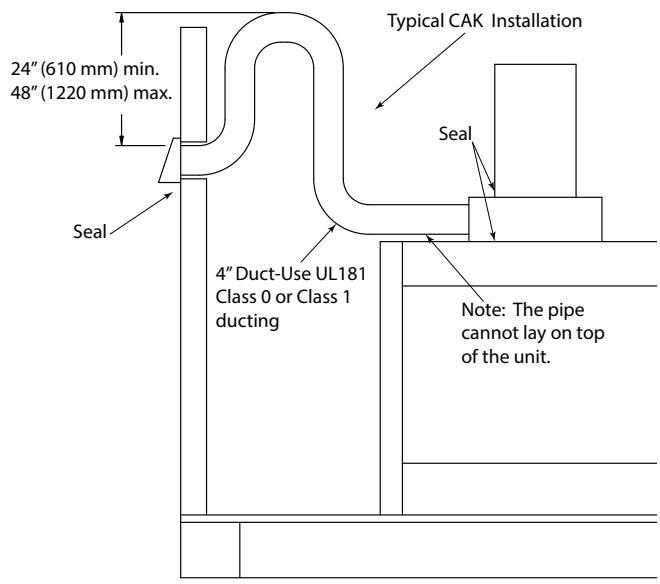

Figure 6.4 P Trap Installation Using Flex Pipe

D. Secure Offset/Return

WARNING! Risk of Fire!

- *Secure offsets with screws (not to exceed 1/2 in./13 mm In length).*
- *Secure returns with strapping.*
- *Straight chimney sections may be secured with screw (not to exceed 1/2 in./13 mm In length) at the joints.*
- *Keep chimney sections from separating or twisting.*

When offsets and returns are joined to straight pipe sections, they must be locked into position with screws (outer only). To prevent gravity from pulling the chimney sections apart, the returns and the chimney stabilizers have hanger straps for securing these parts to joists or rafters. See Figure 6.5.

* Use # 6 or # 8 sheet metal screw, or larger, no longer than 1/2 in. (13 mm).

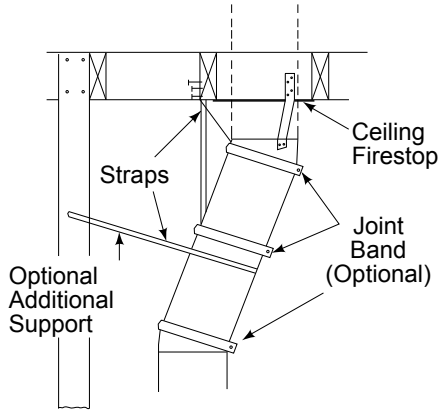

Figure 6.5 Secure the Chimney

E. Install Firestops

WARNING! Risk of Fire! *Firestops must be used whenever the chimney penetrates a ceiling/floor.*

- Mark and cut an opening in ceiling/floor as shown in Figure 6.6.
- Frame the opening with the same size lumber used in the ceiling joists.
- Nail the firestop to the bottom of the ceiling/floor joists.
- Provide a means to maintain the required air space between the chimney and insulation or install an attic insulation shield.

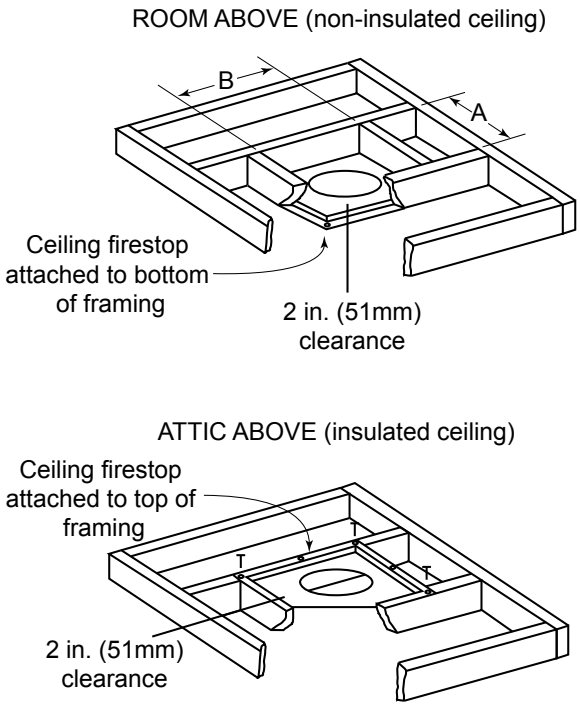

Note: Use same dimensional lumber for framing ceiling firestop and joists.

Catalog #	A		B	
	in.	*mm*	*in.*	*mm*
FS338	14-1/2	368	14-1/2	368
FS339	14-1/2	368	18-3/8	467
FS340	14-1/2	368	23	584

Figure 6.6 Installing the Ceiling Firestop

WARNING! Risk of Fire! DO NOT *seal area between firestop opening and chimney pipe except where they enter the attic or leave the warm air envelope of the home (use 600° F sealant).*

F. Install Attic Insulation Shield

WARNING! Risk of Fire! *You MUST install an attic insulation shield when there is any possibility of insulation or other combustible material coming into contact with the chimney.*

- ***DO NOT*** *pack insulation between the chimney and the attic insulation shield.*
- *Failure to keep insulation and other materials away from chimney pipe could cause fire.*
- ***DO NOT*** *offset chimney inside insulation shield.*
- *Combustible material may come in contact with the attic insulation shield as long as the required clearances are maintained to the chimney pipe.*

Installation of a ceiling firestop is required:

Note: In Canada a CAS8 must be installed. See instructions provided with kit.

- Refer to Figures 6.6, 6.7, 6.8 and 6.9.
- If the attic shield is pre-rolled continue. If it is a flat part, try and roll it up to aid in wrapping it around the chimney.
- Pre-bend all the tabs in at the top to 45°.
- Wrap the shield (around the chimney if already installed) until you have an overlap and the three holes on each side match up (large holes on top).
- Insert three screws into the matching holes to form a tube starting at the bottom.
- Bend the tabs on the bottom of the tube inward to 90° to maintain chimney air space.
- Rest the insulation shield on the ceiling firestop below.
- Tape off any opening around the bottom.

If you wish to make a custom shield or barrier, follow these guidelines:

- Metal is preferred, although any material stiff enough to hold back the insulation can be used.

  WARNING! Risk of Fire! *Use of cardboard or other materials that can deflect under humidity or other environmental conditions is not recommended.*
- The shield or barrier must be tall enough to extend above the insulation and prevent blown-in insulation from spilling into the cavity and accommodate the amount of insulation required by the National Building Code.
- Maintain specified air spaces around chimney.
- Check instructions and local codes for further details.

Double-check the Chimney Assembly

Continue assembling the chimney sections up through the ceiling firestops as needed. While doing so, be aware of the height and unsupported chimney length limitations given under Section 5.

Check each section by pulling up slightly from the top to ensure proper engagement before installing the succeeding sections. If they have been connected correctly, they will not disengage when tested.

The chimney must be enclosed from the fireplace to the attic maintaining the 2 inch clearances to combustibles.

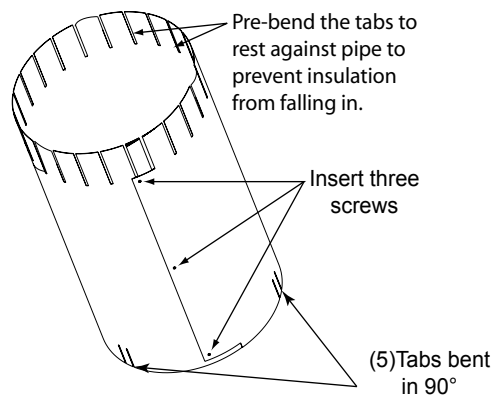

Figure 6.7 Prepare Attic Insulation Shield

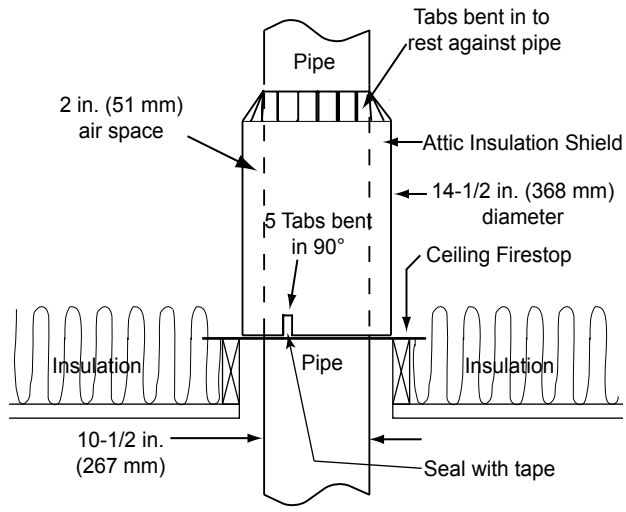

Figure 6.8 Install Attic Insulation Shield (firestop above ceiling)

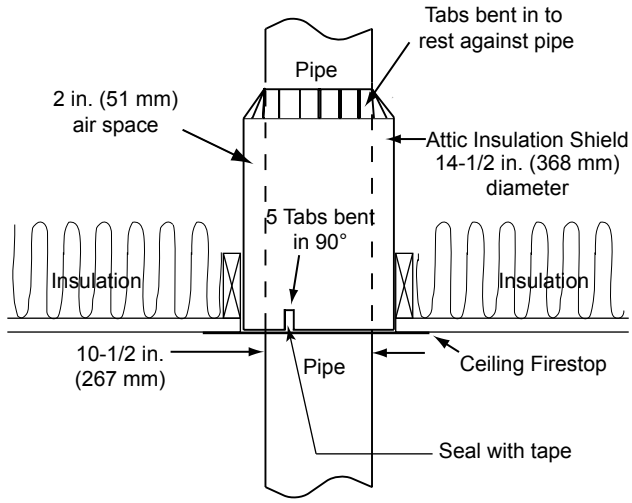

Figure 6.9 Install Attic Insulation Shield (firestop below ceiling)

G. Roof Penetration

- Refer to Figure 6.10.
- Plumb from roof to center of chimney.
- Drive a nail up through roof to mark center of pipe.
- Measure to either side of nail and mark the 14-1/2 in. x 14-1/2 in. (368 mm x 368 mm) opening required.
- Measure opening on the horizontal; actual length may be larger depending on roof pitch.
- Cut out and frame opening.

Install Flashing

- Assemble chimney so it passes through the framed opening.
- Slip the flashing over the chimney.

NOTICE: *Roofing shingles must be below the flashing plate on the lower side of a sloped roof and over the flashing plate on the sides and top.*

- Nail the flashing to the roof. Keep gaps between the flashing plate and the roof to a minimum.
- Caulk the flashing plate and roof junction as well as the vertical seam on the flashing. All nail heads must be caulked with a roofing sealant.
- Caulk the overlap seam of any exposed pipe sections that are located above the roof line to prevent leaks.

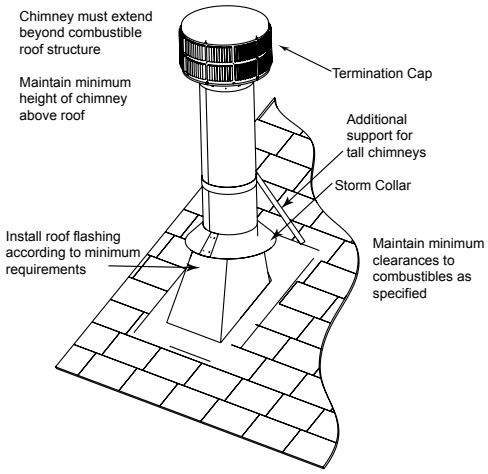

Figure 6.10 Install Flashing

H. Manufactured Home Installation SL-300 Series Ceiling/Roof Thimble

NOTICE: REQUIRED *for manufactured homes.*

- Locate the point where the chimney will exit the roof by plumbing down to the center of the chimney. Lay out, cut and frame a 14-1/2 in. (368 mm) square opening (measured on the horizontal) through the ceiling and roof structure. ***Consult local codes for framing details.***
- The thimble must extend completely through the roof structure shielding combustible materials. Five location holes have been provided to allow for a variety of ceiling/roof thicknesses. A thimble extension is required when the ceiling/roof thickness exceeds 12-1/2 in. (318 mm). The extension should overlap the thimble one inch.
- To attach the extension to the thimble, drill 1/8 in. (3 mm) holes through the outer shield of the thimble using the predrilled holes in the extension as guides. Attach the extension to the thimble using the screws provided with the extension.
- Install the thimble assembly and nail it securely to the framing members.

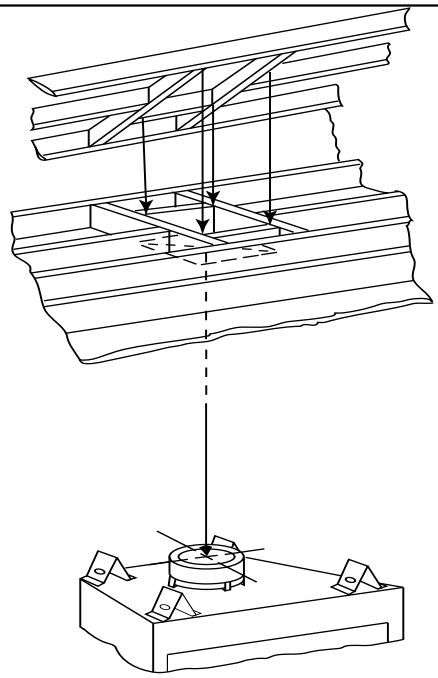

Figure 6.11 Ceiling/Attic Construction

- Center the flashing over the chimney and nail it to the roof. Keep gaps between the flashing plate and the roof to a minimum. Caulk the flashing plate and roof junction as well as the vertical seam on the flashing. All nail heads must be caulked with a roofing sealant.
- Finish assembling the chimney storm collar and termination cap following the installation instructions provided with them.

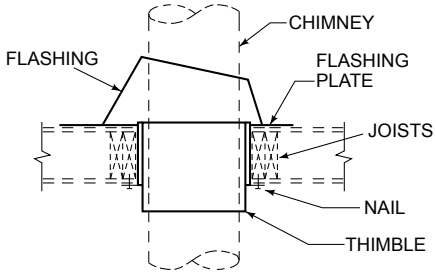

Figure 6.12 Installing Part: 12966A, Configuration 1

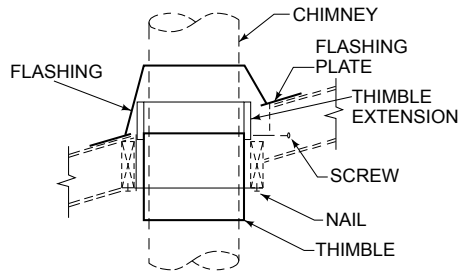

Figure 6.13 Installing Part 12966A, Configuration 2

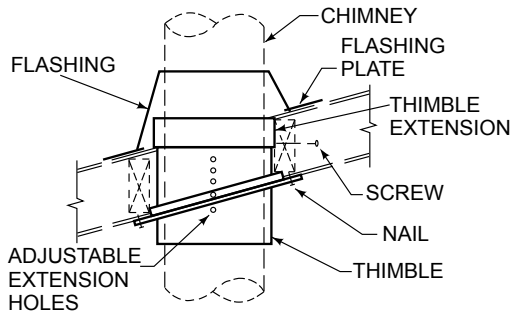

Figure 6.14 Installing Part 12966A Configuration 3

I. Install Chase/Chase Top

- You MUST use a chase top in a chase installation. Chase tops are available from your dealer or may be field constructed.
- Include a turndown and drip edge to prevent water from seeping into the chase.
- Include a 2 in. (51 mm) soldered, welded or spun collar around pipe opening to keep water out.
- Provide a 1/8 in. (3 mm) gap around the flue pipe.
- Slope the chase top downward away from the opening.

***WARNING! Risk of Fire! DO NOT** caulk the pipe to the chase top collar.*

- Caulk all seams to prevent leaks.

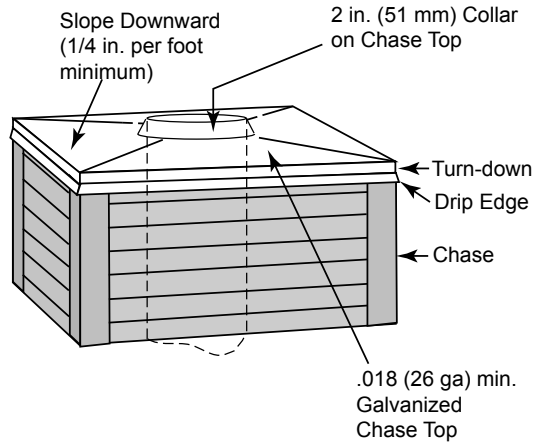

Figure 6.15 Chase Top Construction

J. Install Termination Cap

Install the chimney sections up through the chase enclosure.

- Caulk the overlap seam of any exposed pipe sections that are located above the roof line to prevent leaks.
- Refer to termination cap instructions.

WARNING! Risk of Fire! *The minimum overlap of cap to pipe (as shown in the following illustrations) MUST be met or chimney may separate from cap. Separation allows sparks, heat and embers to escape.*

NOTICE: *Paint the termination cap with a rust-resistant paint to protect against the effects of corrosion on those parts exposed to the weather.*

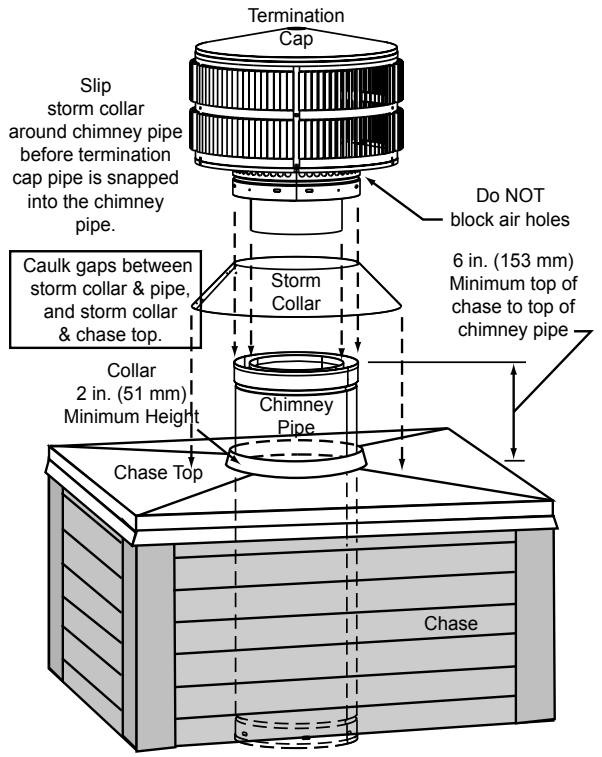

Termination cap pipe and chimney section must be snapped together to maintain an overlap of 1-1/2 in. (38 mm).

Figure 6.16 Installing a TR344 Round Termination Cap

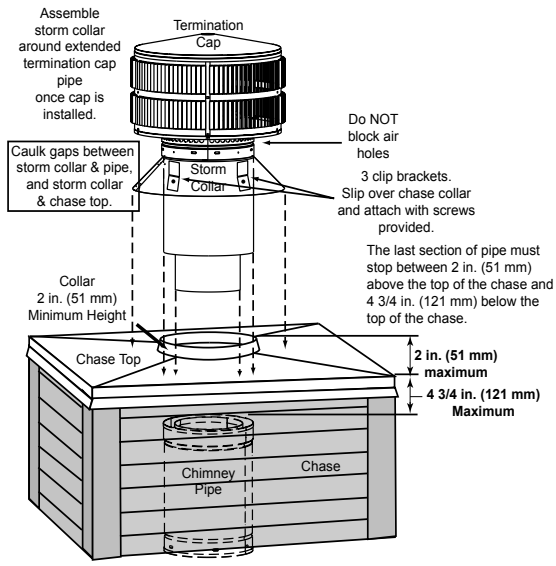

Figure 6.17 Installing a TR342-B Round Telescoping Termination Cap

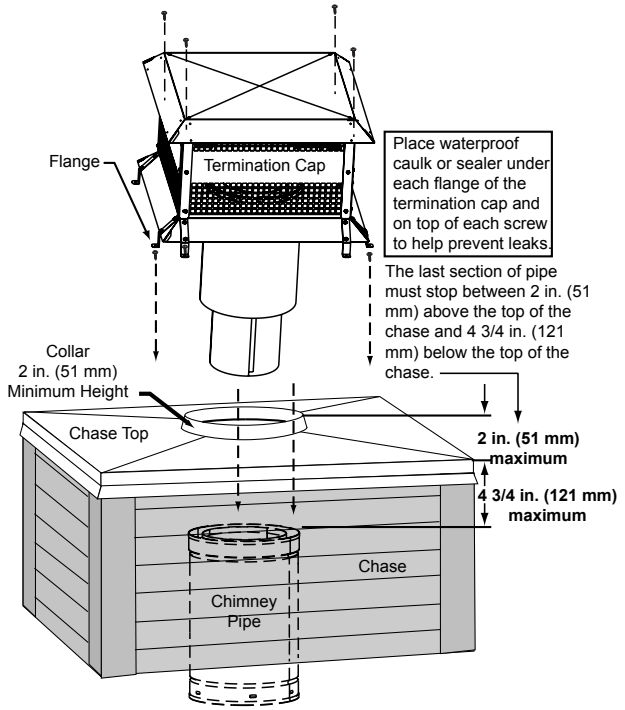

Figure 6.18 Installing an ST375 Square Termination Cap

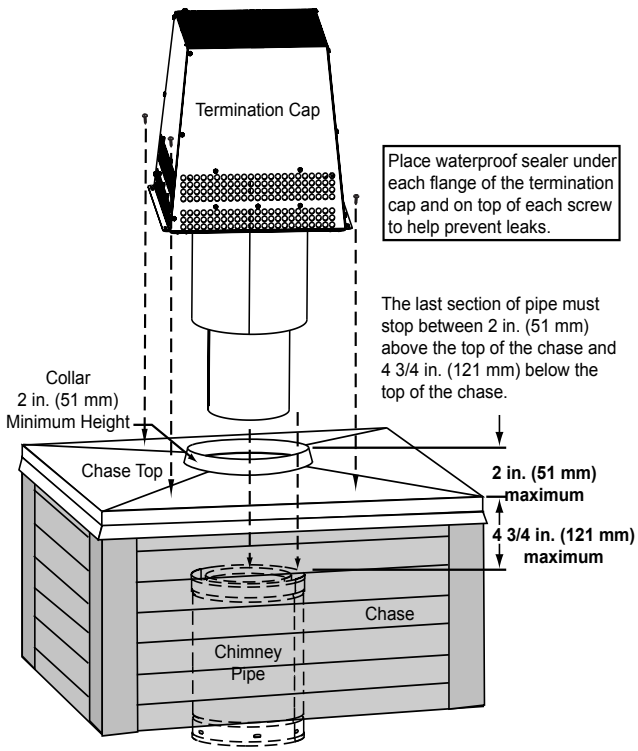

Figure 6.19 Installing a TS345/TS345P Square Termination Cap

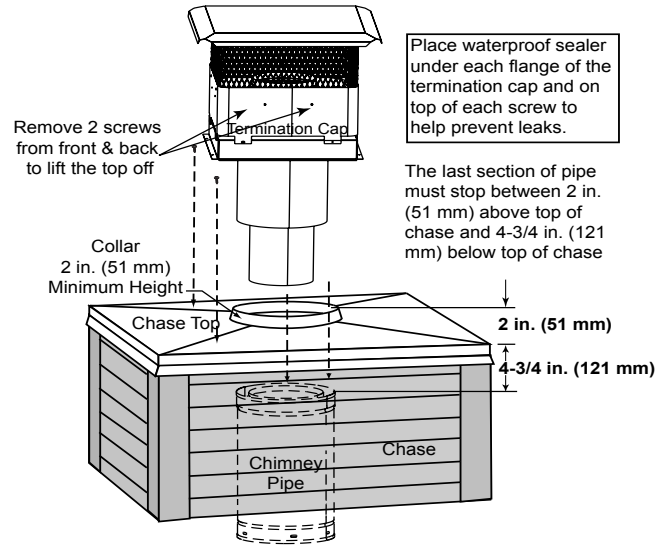

Figure 6.20 Installing a TCT375 Terra Cotta Cap

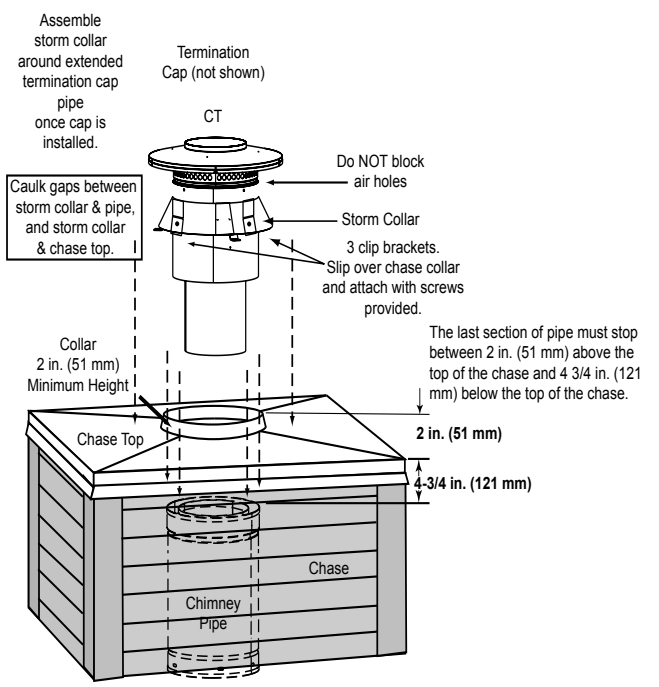

Figure 6.21 Installing CT-3A Cap Adapter

7 Shrouds

WARNING! Risk of Fire! *Shrouds must be constructed as specified. Improper construction may overheat chase top.*

Shrouds may be field constructed where permitted by regional building codes.

NOTICE: *Some regional codes require an agency-Listed shroud. Consult your local building officials.*

The shrouds must be constructed from minimum .018 in. (26 ga) thick aluminzed steel.

Some shrouds require a radiation shield. Use where specified.

A. Radiation Shield

Radiation shield must be constructed of minimum 26 ga thick sheet metal.

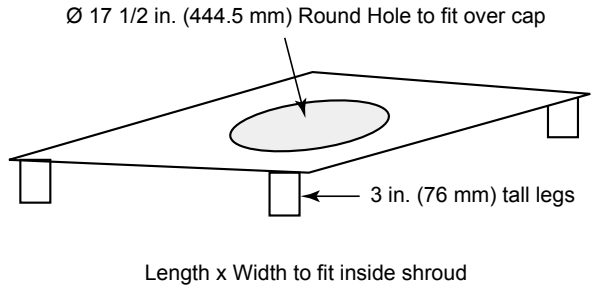

Figure 7.1 Radiation Shield

B. Field Constructed Shrouds

The following field constructed shroud designs have been tested for HHT fireplace systems and termination caps.

1. Open Top Shroud

TR11/TR11T TV (top vented) caps do not require radiation shield.

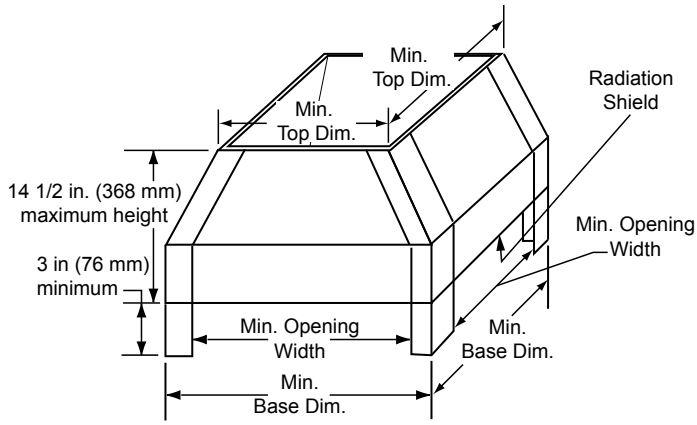

	TR11/11T	TR11/11T TV
Min. Base Dims.		
in	32 x 32	26 x 26
mm	813 x 813	660 x 660
	Radiation Shield Required	Radiation Shield Not Required
Min. Top Dims.		
in	29 x 29	23 x 23
mm	737 x 737	584 x 584
Min. Opening Width		
in	26 x 26	20 x 20
mm	660 x 660	508 x 508

Figure 7.2 Open Top Shroud Dimensions (with Radiation Shield)

TR11/TR11T caps require radiation shield unless installed partially above the shroud. The TR cap must be raised to the minimum dimensions (or greater) above the shroud. Refer to Figure 7.3.

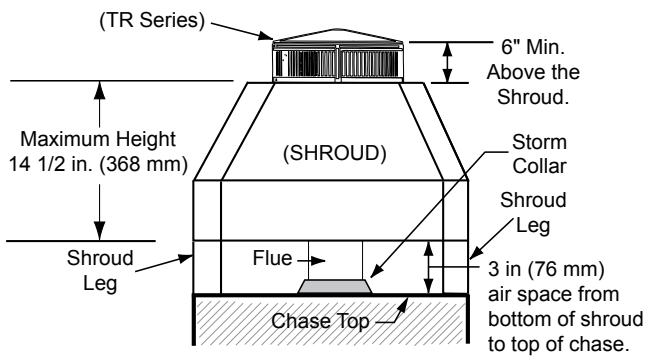

Figure 7.3 Shroud & TR Series cap with no Radiation Shield

2. Mailbox Style Shroud

Radiation shield required

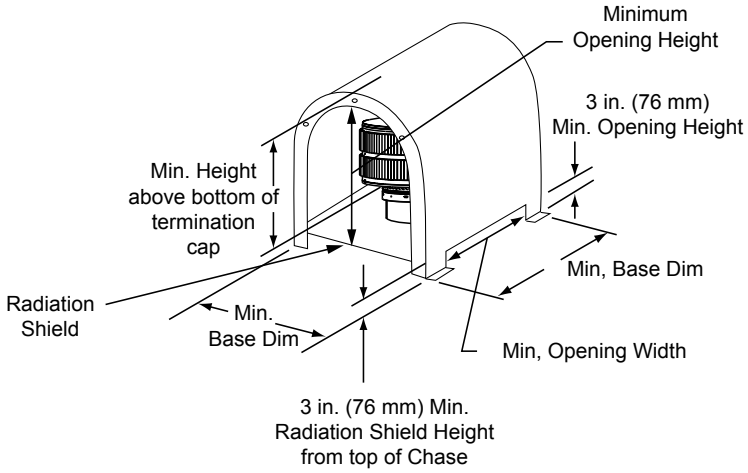

	TR11/11T	TR11/11T TV
Min. Base Dims.		
in	34 x 34	28 x 30
mm	864 x 864	711 x 762
Min. Height Above Bottom of Termination Cap		
in	28-1/4	27-1/2
mm	718	698
Min. Opening Width		
in	28	22
mm	711	559
Min. Opening Height		
in	18-1/4	17-1/2
mm	464	445

Figure 7.4 Mailbox Style Shroud Dimensions

3. Roofed Style Shroud

Radiation shield required

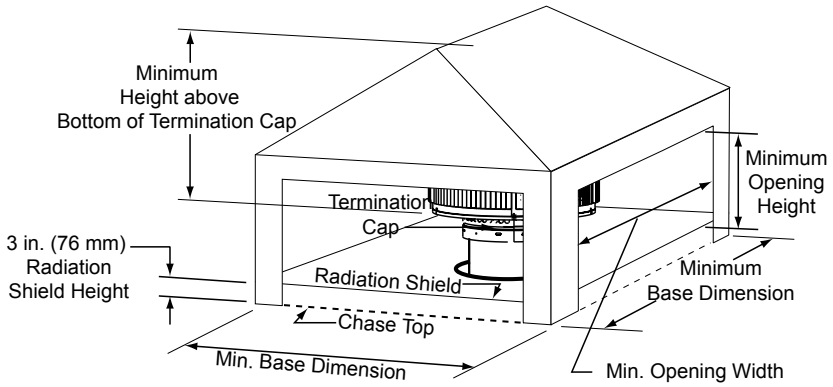

TR11/11T TR11/11T TV	
Min. Base Dims.	
in	34 x 34
mm	864 x 864
Min. Height Above Bottom of Termination Cap	
in	23
mm	584
Min. Opening Width	
in	28
mm	711
Min. Opening Height	
in	12
mm	305

Figure 7.5 Roofed Style Shroud Dimensions

8 Finishing

A. Template

A cardboard template of the front is printed on the outside of the shipping box. Cut out the template along the outside of the line for use in your installation. If using the cardboard template, it will require 1/4-20 bolts to attach it to the fireplace, (NOT INCLUDED). A metal template (see catalog) is available for more durable continued use, remaining accurate over time. Both measure 1/8 in. (3 mm) larger all the way around than the actual front.

Note: This 1/8 in. of the non-combustible material must be painted or the red will be visible.

Tools Required: 5/32 in. Allen wrench.

- Remove the screws from the fascia and remove fascia from the fireplace (if installed). Save the screws. Store the fascia in a safe, protected area to prevent scratching or other damage.
- Install the template on the front of the fireplace (Figure 8.1) with screws removed or provided.

NOTE: Do not over tighten the screws, just tighten up the template enough so that it comes in contact with the outer flanges on the front of the fireplace.

You are now ready to continue your installation with the desired decorative material. The template also serves as a protective covering and prevents damage to the front of the fireplace.

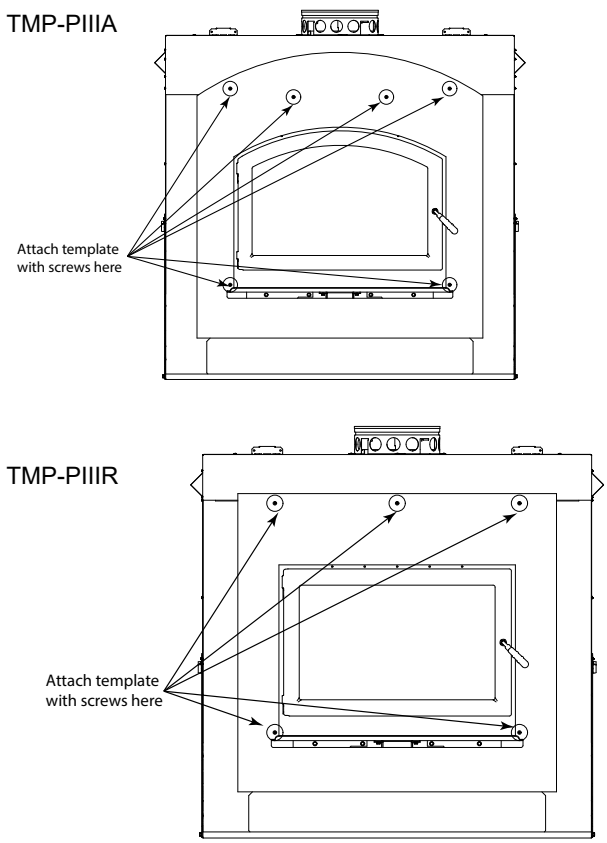

Figure 8.1 Install the Finishing Template

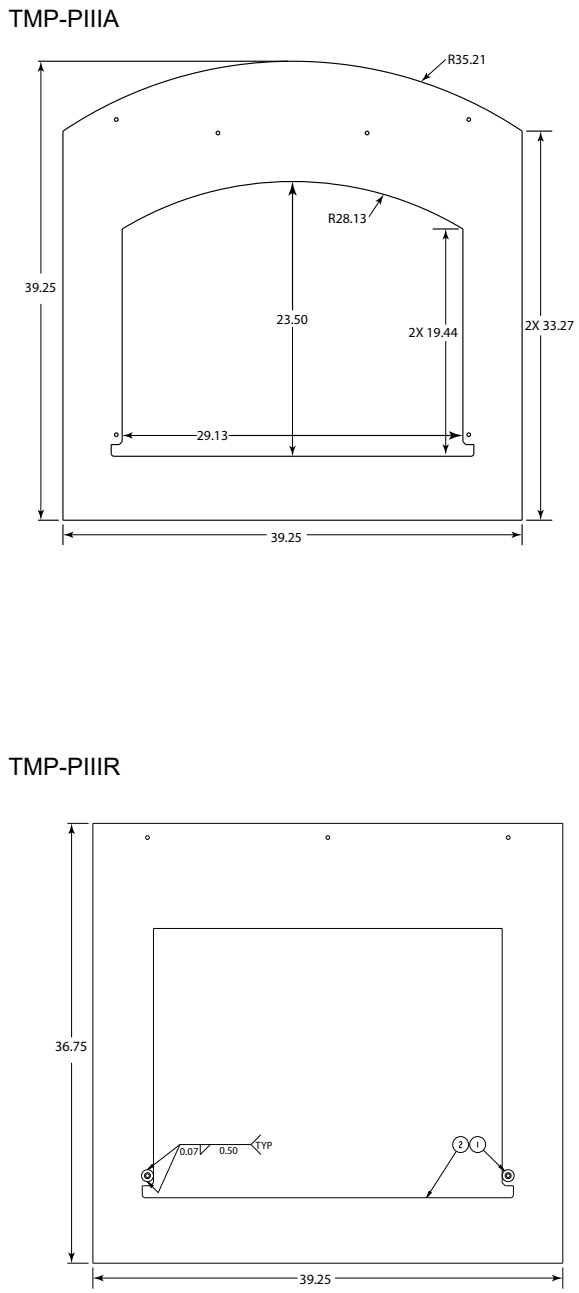

Figure 8.2 Template Dimensions

Note: ***DO NOT*** remove hang tags until installing finish materials.

NOTE: *The decorative fascia must be removable for future serviceability.*

B. Finish the Wall

Use a wet or dry towel or a soft brush to remove any dust or dirt from the non-combustible facing material.

Apply a non-combustible adhesive to attach tile, stone or other non-combustible finishing materials per manufacturer's instructions.

1. Stone, Brick Finish

***WARNING! Risk of Fire! DO NOT** apply tar paper or water resistive barrier over non-combustible board.*

- Apply metal lath to the 1/2 in. thick non-combustible board with corrosion resistant self-tapping screws capable of penetrating the metal surface behind the non-combustible board.
- HHT recommends using type N or type S mortar. Due to high temperatures, review polymer modifiers specification sheet before using.

2. Tile, Granite, Marble Finish

- Due to high temperatures, HHT recommends using unmodified thinset when applying tile.
- When applying granite or marble, HHT recommends using thinset to adhere. If using a different adhesive, review specification sheet for application in high temperature areas.

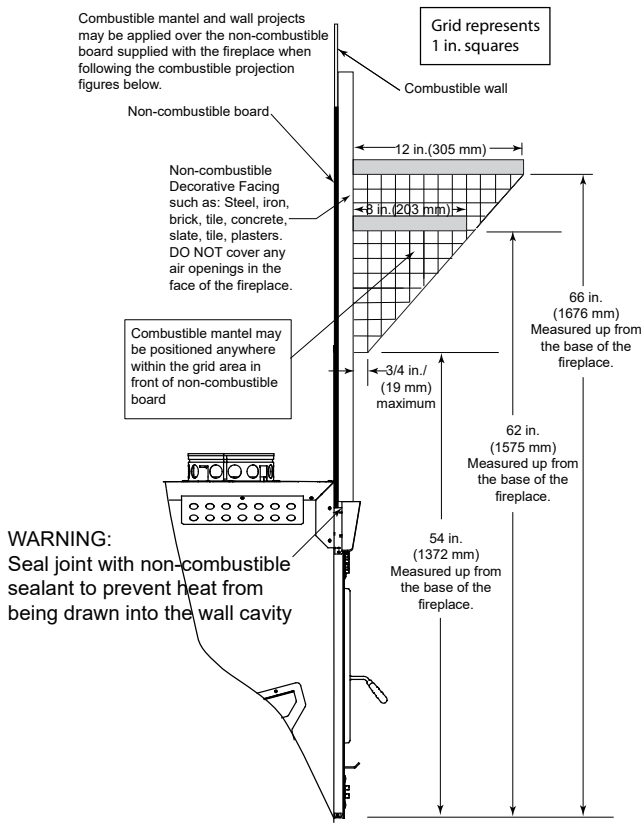

Figure 8.3 Mantel Height

C. Mantel and Wall Projections

A combustible mantel may be positioned no lower than 66 in. (1676 mm) at 12 in. (305 mm) deep from the base of the fireplace. Combustible mantel and wall projections may be applied over the non-combustible board supplied with the fireplace when following the combustible projection figures below.

Minimum clearance faceplate to sidewall is 16 in.

The combustible mantel may have a maximum depth of 12 in. (305 mm). Combustible trim pieces that project no more than 3/4 in. (19 mm) from the face of the fireplace can be placed no closer than 6 in. (152 mm) from the side of the decorative front. Surround legs that project more than 3/4 in. (19 mm) must be 16 in. (406 mm) away from the side of the decorative front. Combustible trim must not cover:

- the metal surfaces of the fireplace
- where the non-combustible board is placed over the metal surfaces
- the space between the metal face of the fireplace and framing members

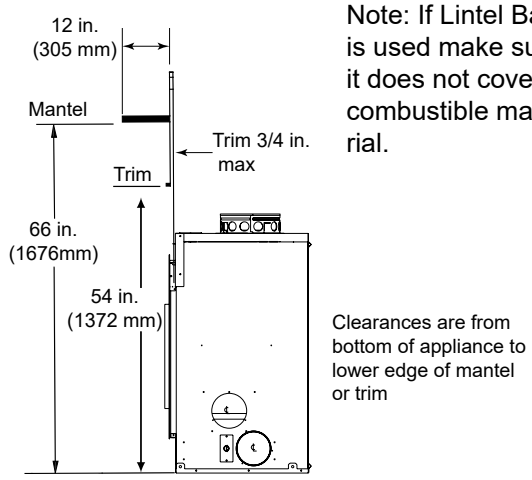

Note: If Lintel Bar is used make sure it does not cover combustible material.

Figure 8.4 Mantel Specifications - Combustible Mantel

A noncombustible mantel may be positioned no lower than 46 in. (1168 mm) from the base of the fireplace. See Figure 8.5.

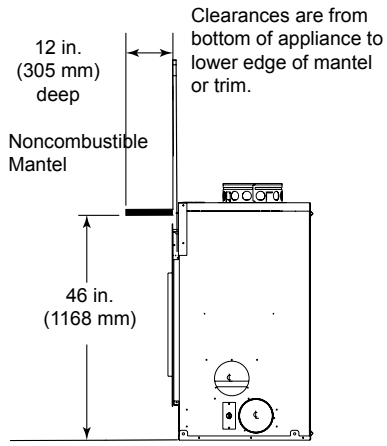

Figure 8.5 Mantel Specifications - Non-Combustible Mantel

D. Finishing the Hearth Extension

WARNING! Risk of Fire! *High temperatures, sparks, embers or other burning material falling from the fireplace may ignite flooring or concealed combustible surfaces.*

- *Protective metal hearth strips MUST be installed.*
- *Hearth extensions MUST be installed exactly as specified.*

A hearth extension must be installed with all fireplaces to protect the combustible floor in front of the fireplace from both radiant heat and sparks.

- You MUST use a hearth extension with this fireplace.
- Refer to Figure 8.5 for minimum dimensions.
- This fireplace has been tested and approved for use with a hearth extension insulated to a minimum R value of 1.03.
- The hearth extension material MUST be covered with tile, stone or other non-combustible material.
- Manufactured hearth materials will usually have a published **R value** (resistance to heat) or **k value** (conductivity of heat). Refer to the formula in Table 8.1 to convert a k value to an R value,
- Refer to Table 8.2 for hearth extension insulation alternatives.

Table 8.1

R = 1/k x inches of thickness

Table 8.2

Hearth Extension Insulation Alternatives, R Value = 1.03			
Material	**k per inch thick**	**r per inch thick**	**Minimum thickness required**
Hearth & Home HX3, HX4	0.49	2.06	1/2 in.
USG Micore 300™	0.49	2.06	1/2 in.
USG Durock™ Cement Board	1.92	0.52	2 in.
Cement Mortar	5.0	0.20	5 1/8 in.
Common Brick	5.0	0.20	5 1/8 in.
Ceramic Tile	12.50	0.08	12 1/4 in.
Armstrong™ Privacy Guard Plus	0.46	2.18	1 in.
Marble	14.3-20.0	0.07-0.05	14 5/8 in. - 20 3/8 in.

WARNING! Risk of Fire!

You must comply with all minimum air space clearances to combustibles as specified. Framing or finishing material used on the front of, or in front of, the fireplace closer than the minimums listed must be constructed entirely of non-combustible materials (i.e., steel studs, concrete board, etc.). Failure to comply may cause fire.

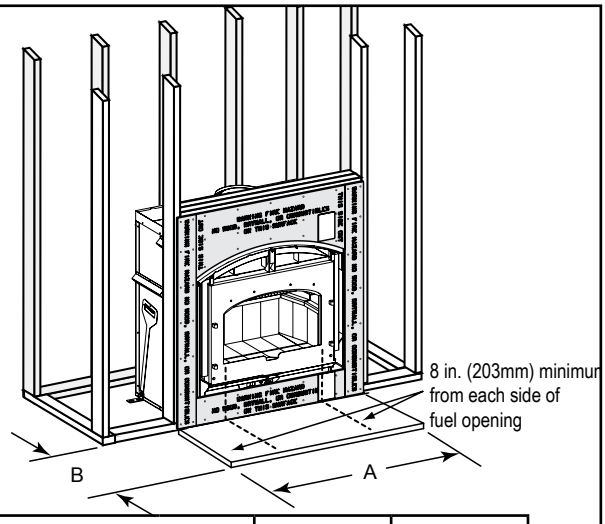

Model # PIONEER III		A	B
	in.	42	20
	mm	1067	508

Figure 8.6 Minimum Hearth Extension Dimensions

- Fireplace and Hearth Extension flush on the floor
  Non-combustible flooring a minimum of 20 in. (508 mm) in front of and 8 in. (203 mm) to either side of the fuel opening is required as shown in Figure 8.6.
  The construction of, and materials used for a hearth extension are shown in Figure 7.7. A hearth extension of this construction may be covered with any non-combustible decorative material and may have a minimum thickness as per Figure 8.6. Seal gaps between the hearth extension and the front of the fireplace with a bead of non-combustible sealant or grout.

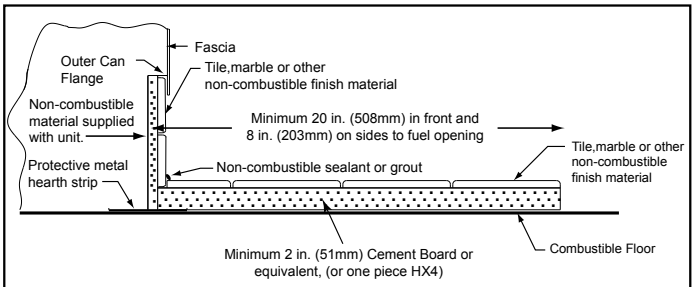

Figure 8.7 Fireplace and Hearth Extension Flush on the Floor.

- Fireplace installed flush on the floor and hearth extension raised to bottom of fascia:
  Non-combustible flooring a minimum of 20 in. (508 mm) in front of and 8 in. (203 mm) to either side of the fuel opening is required (see Figure 8.5).

- Raised Hearth Extension Framing
  The hearth framing must be constructed of non-combustible materials (such as metal framing or equivalent material) and topped with one HX4, or equivalent material (Table 8.2).
  When creating the platform, allow for the thickness of the non-combustible finishing materials (Figure 8.8).

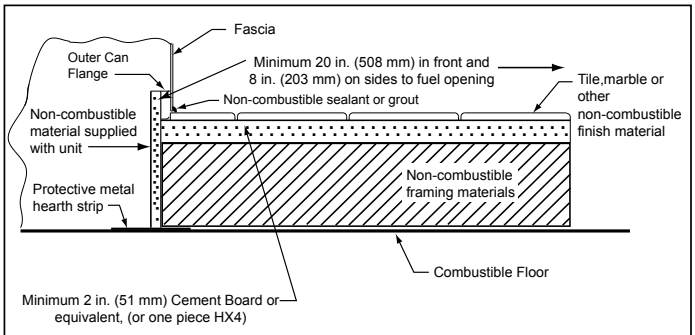

Note: For installations with vinyl flooring, special clearance recommendations apply.

Figure 8.8 Raised Hearth Extension to Bottom of Fascia

WARNING! Risk of Fire!

Hearth extensions are to be installed only as illustrated to prevent high temperatures from occurring on concealed combustible materials.

Vinyl Flooring

Vinyl Flooring is sensitive to heat. A 48 inch minimum depth hearth extension is recommended when using vinyl flooring up to the wall. See Figure 8.8.

Notice: Clearances that do not meet the minimum guidelines could result in damage or buckling to the vinyl flooring and is done at the installer's risk.

Hearth and Home Technologies does not recommend adhesive based vinyl flooring due to thermal expansion. Floating-style flooring can be used, but will reach temperatures up to 110°F in a room with ambient temperatures of 70°F. Consult flooring specifications to ensure compatibility.

E. Non-Combustible Sealant Material

- After completing the installation of non-combustible facing board in the required non-combustible zone and the non-combustible finishing material over that, remove the template.
- A bead of non-combustible sealant must be used to close off any gaps at the top and sides between the fireplace and non-combustible facing (Figure 8.9) to prevent cold air leaks and the risk of fire. Large gaps can be bridged with fiberglass rope gasket.
- When installation of the decorative material is complete, replace/install the fascia and fireplace doors.

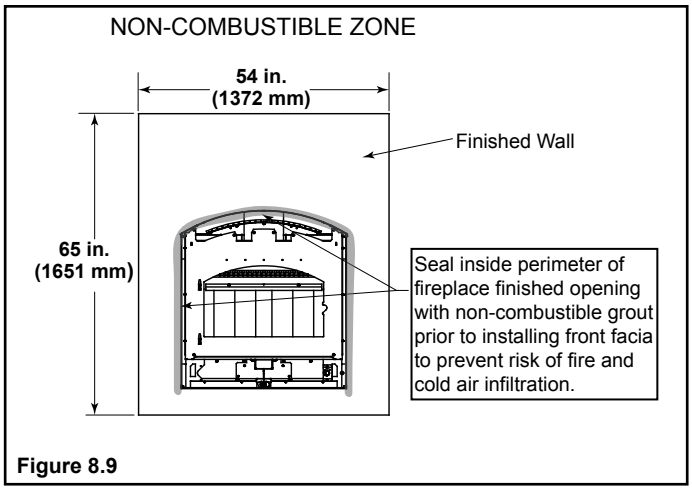

Figure 8.9

WARNING! Risk of Fire!

- *Maintain clearances.*
- *Use only non-combustible material below standoffs, material such as cement board is acceptable.*
- *Framing or finishing material used on the front of the fireplace closer than the minimums listed, must be constructed entirely of non-combustible materials (i.e., steel studs, concrete board, etc.).*

WARNING! Risk of Fire!

Hearth & Home Technologies is not responsible for discoloration, cracking or other material failures of finishing materials due to heat exposure or smoke.

- *Choose finishing materials carefully.*

WARNING! Risk of Fire!

Seal around finishing material to fireplace.

9 Fireplace Setup

A. Firebrick Placement

The firebox of your fireplace is lined with high quality fire-brick, which has exceptional insulating properties.

Do not use a grate; simply build a fire on the firebox floor.

Do not operate the fireplace without bricks. Make sure bricks are installed as shown.

IMPORTANT: Be certain you have the proper brick in the correct location. Measure the brick size for accuracy.

- Remove new brick set from box and lay out to diagram as shown in Figure 9.1.
- Lay bottom bricks in firebox.
- Install rear bricks on the top of the bottom bricks. Slide top of bricks under clip on back of firebox wall and push bottom of brick back.
- Install side bricks. Slide top of brick under clips on side of firebox and push the bottom of the brick until it is flush with the side of the firebox.

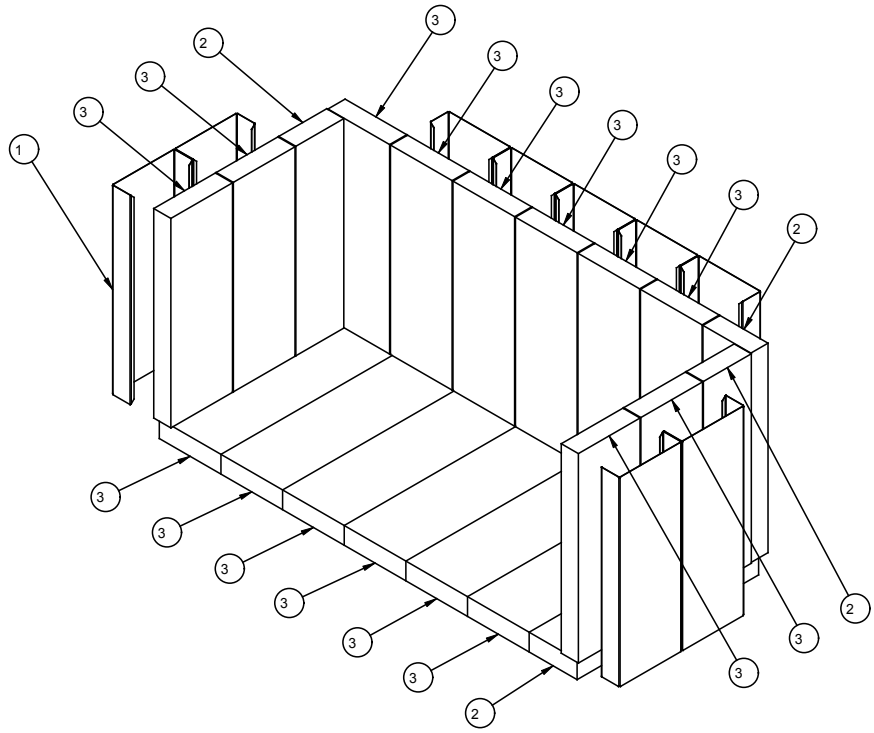

Figure 9.1 Fire Brick Configurations

Table 9.1

#	Brick Size	Qty. in Set
1	Brick Wrap	**9**
2	Firebrick 13.25 x 3.50 x 1.25	4
3	Firebrick 13.25 x 4.50 x 1.25	16

B. Baffle and Blanket Placement

Ensure correct baffle and baffle protection channel placement; replace baffle components if damaged or missing.

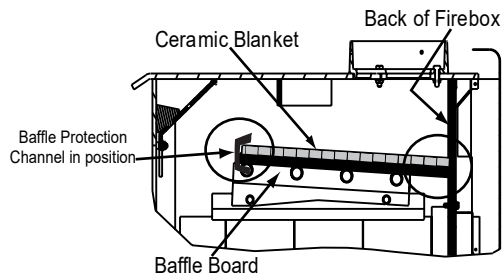

Figure 9.2

The ceramic blanket and baffle board MUST be in contact with the back of the firebox and even with each other in the front. The baffle protection channel MUST be in position.

C. Install Fascia (Fronts)

Fronts are required to complete the installation. The PIONEER-III-ARC fireplace allows a choice of fronts, therefore they are shipped separately from the fireplace due to customer preference and selection. The PIONEER-III-REC front ships separately also, but only one style. Instructions for attachment of the fronts are included with them. Contact your local dealer with any questions on offerings or installation.

10 Reference Materials

A. Chimney Components

The following drawings show the SL-300 Series chimney and fireplace components which may be safely used with this fireplace. The 8 in. DuraPlus can also be used.

Catalog #	Description
CAK4A	Chimney Air Kit (shipped with fireplace)
ID4	Insulated Duct (used with chimney air kit)
UD4	Uninsulated Duct (used wth chimney air kit)
SL306	Chimney Section - 6 in. (152 mm) long
SL312	Chimney Section - 12 in. (305 mm) long
SL318	Chimney Section - 18 in. (457 mm) long
SL324	Chimney Section - 24 in. (610 mm) long
SL336	Chimney Section - 36 in. (914 mm) long
SL348	Chimney Section - 48 in. (1219 mm) long
SL3	Chimney Stabilizer
CAS8	Attic Shield Kit
SL315	Chimney Offset/Return - 15 deg
SL330	Chimney Offset/Return - 30 deg
FS338	Ceiling Firestop - Straight
FS339	Ceiling Firestop - 15 deg
FS340	Ceiling Firestop - 30 deg
AS8	SL300 Straight Attic Insulation Shield, 24 in. (610 mm) (shipped with fireplace)
JB877	Chimney Joint Band
CB876	Chimney Bracket
RF370	Roof Flashing - Flat to 6/12 Pitch
RF371	Roof Flashing - 6/12 to 12/12 Pitch
DTO134/146	Octogonal Decorative Caps
DTS134/146	Square Decorative Caps
ST375	Square Termination Cap
TCT375	Terra Cotta Termination Cap
TR344	Round Termination Cap
TR342-B	Round Telescoping Termination Cap
TR-TVK	TR Top Vent Kit
TS345	Square Termination Cap
TS345P	Square Termination Cap - Painted
12966A	Manufactured Home Thimble
MH841	Manufactured Home Thimble Extension 20 in./508 mm
HX4	Micore Hearth Extension, 20 in./508 mm wide
LDS33	Decorative Shroud - 3 ft x 3 ft (.91 m x .91 m)
LDS46	Decorative Shroud - 4 ft x 6 ft (1.22 m x 1.83 m)
LDS-BV	Decorative Shroud - 26 in. x 26 in. (660 mm x 660 mm)
	Field Constructed Shrouds (See “Woodburning Termination Cap”)
CT-3A-B	Adapter - May be used with the following caps
	CT Series
	DT Series
8DP-BP	Duraplus Base Plate (required if using DuraPlus Chimney)

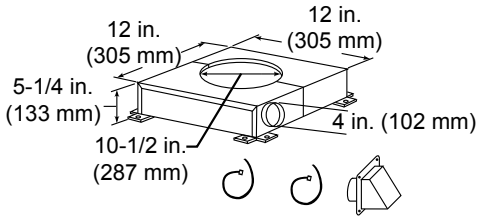

CAK4A Chimney Air Kit (shipped with fireplace)

ID4 Insulated Duct

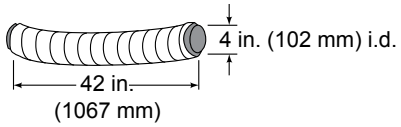

UD4 Uninsulated Duct

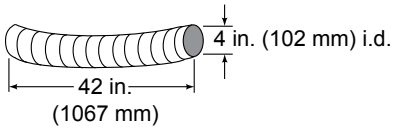

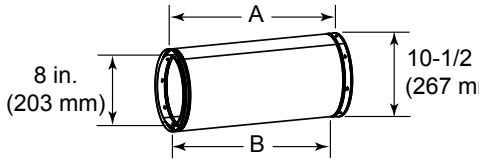

Catalog #	A		B	
	in	mm	in	mm
SL306	6	152	4-3/4	121
SL312	12	305	10-3/4	273
SL318	18	457	16-3/4	425
SL324	24	610	22-3/4	578
SL336	36	914	34-3/4	883
SL348	48	1219	46-3/4	1187

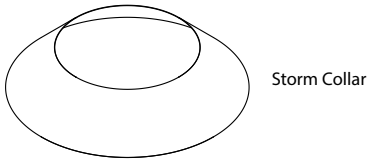

Attic Shield Kit

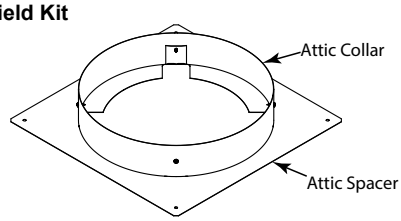

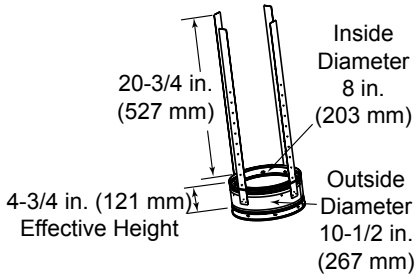

SL3 Chimney Stabilizer

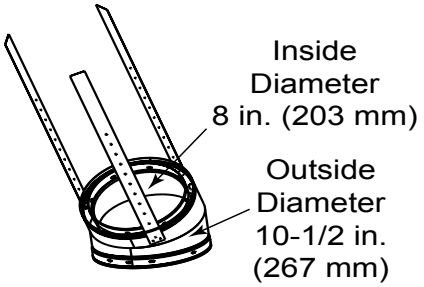

SL315 Chimney Offset/Return - Effective Height 13-3/8in. (380 mm)
SL330 Chimney Offset/Return - Effective Height 15-1/2in. (394 mm)

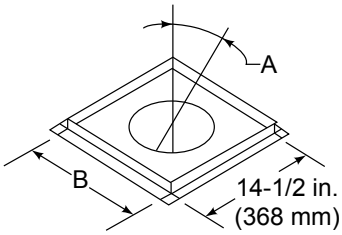

Firestop Spacer

Catalog #	A	B	
FS338	0-deg.	14-1/2 in.	368 mm
FS339	15-deg.	18-3/8 in.	467 mm
FS340	30-deg.	23 in.	584 mm

A = Actual Length
B = Effective length (length of chimney part after it has been snapped to another)

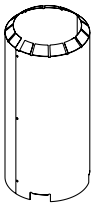

Assembled
Diameter: 14 1/2 in./368 mm
Height: 24 in./610 mm

AS8 SL300 Straight Attic Insulation Shield (shipped with unit)

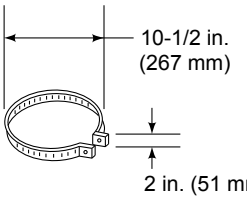

JB877 Chimney Joint Band

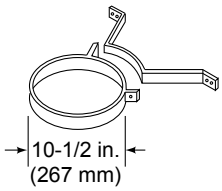

CB876 Chimney Bracket

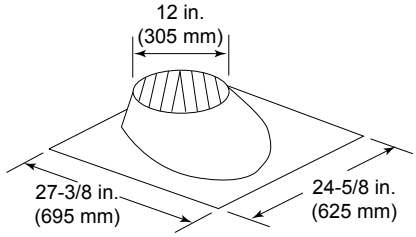

RF370 - Roof Flashing Flat to 6/12 Pitch

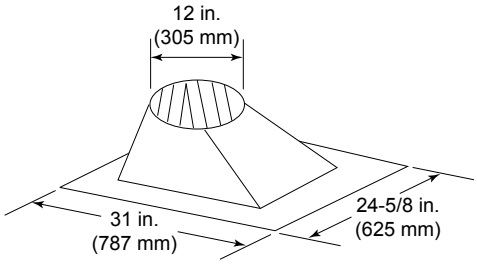

RF371 - Roof Flashing 6/12 to 12/12 Pitch

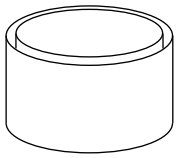

MH841 Manufactured Home Thimble Extension

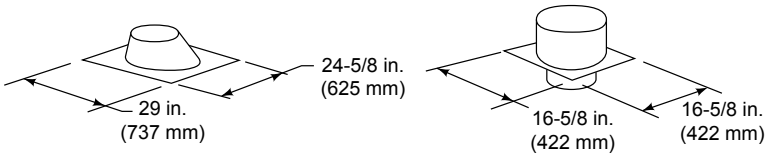

12966A Manufactured Home Thimble

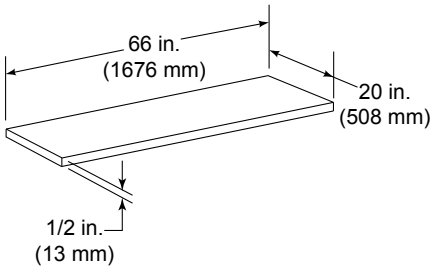

HX4 Micore Hearth Extension

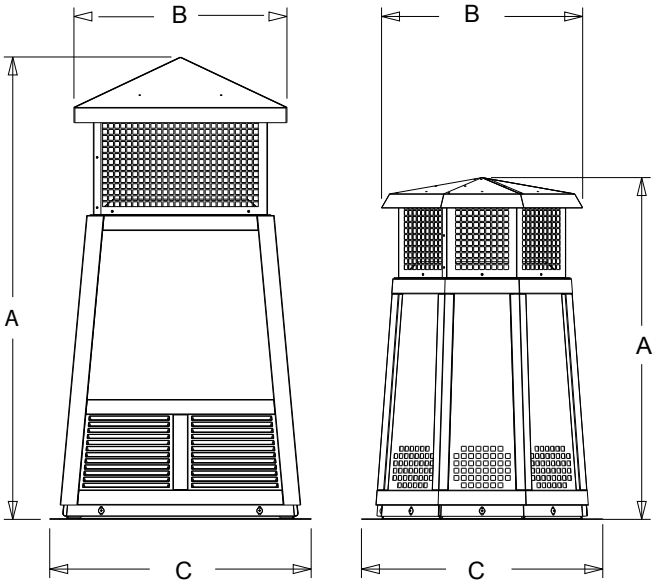

DTS134/DTS146 **DTO134/DTO146**
Decorative Caps

DTO134		A	B	C
	in	34	20	24
	mm	864	508	610
DTO146				
	in	46	22.7	26
	mm	1168	576	660

DTS134		A	B	C
	in	34	21.18	24
	mm	864	538	610
DTS146				
	in	46	21.18	26
	mm	1168	538	660

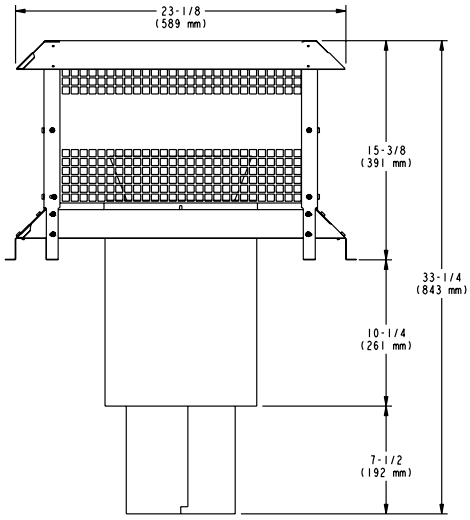

ST375 Square Termination Cap

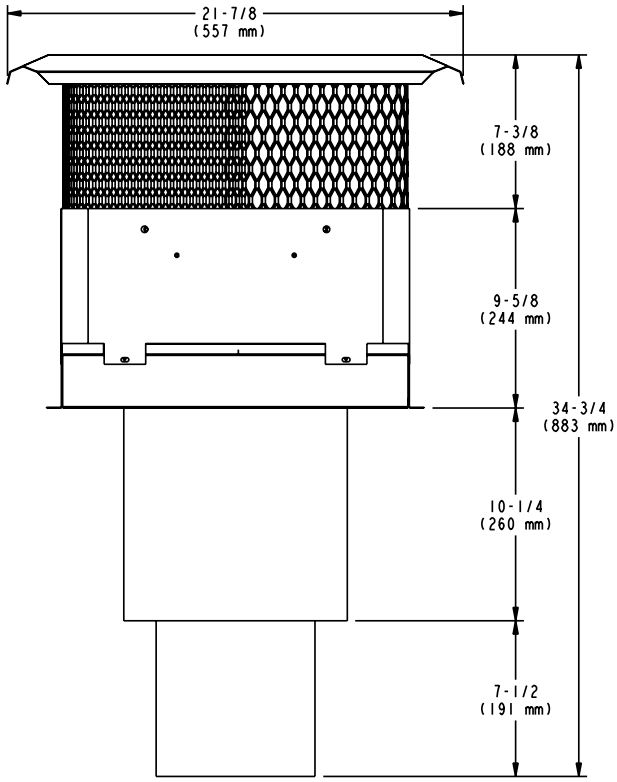

TCT375 Terra Cotta Cap

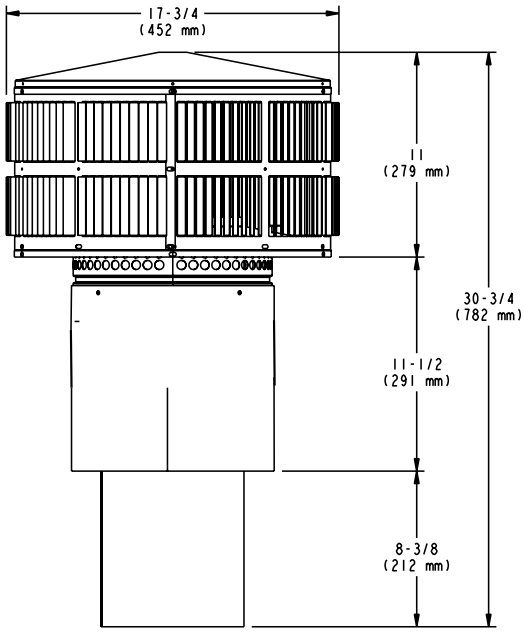

TR342-B Round Telescoping Termination Cap

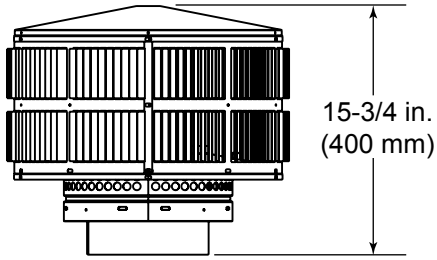

TR344 Round Termination Cap

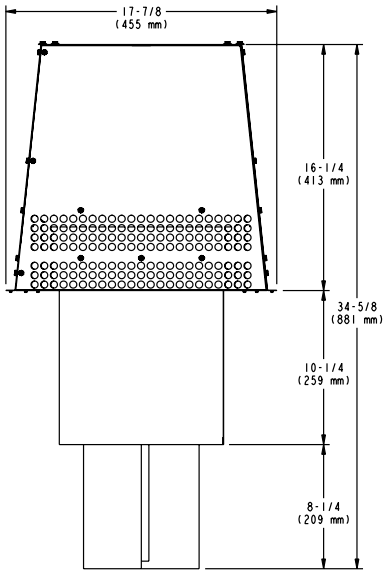

TS345/TS345P Square Termination Cap

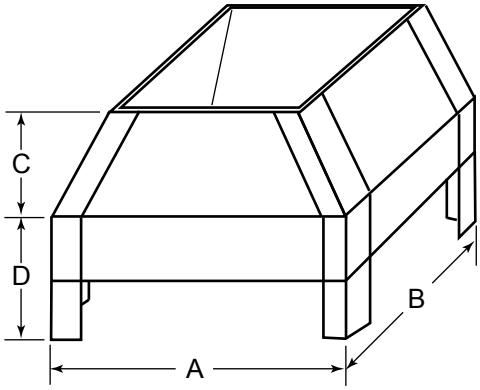

LDS33/LDS46 Decorative Shroud

Catalog #	A		B		C		D	
	in.	*mm*	*in.*	*mm*	*in.*	*mm*	*in.*	*mm*
LDS33	36	914	36	914	8.5	216	11	279
LDS46	48	1219	72	1829	8.5	216	11	279

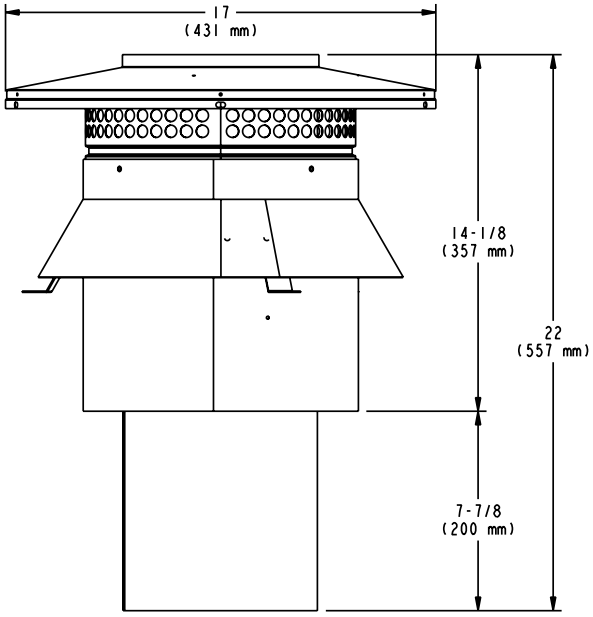

CT-3-B

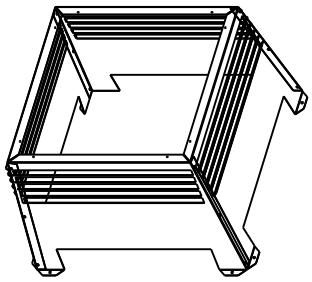

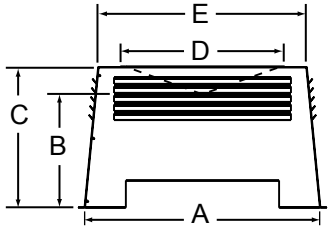

LDS-BV Decorative Shroud

Catalog #		A	B	C	D	E
LDS-BV	*in.*	26	12.5	15.5	22	23
	mm	660	318	394	533	584

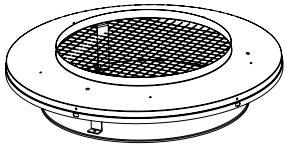

TR-TVK Top Vent Kit

DuraPlus Venting

Catalog #	Description
DV-8DP-BP	8" DuraPlus base plate
DV-8DP-E15	8" DuraPlus 15° elbow kit
DV-8DP-E30	8" DuraPlus 30° elbow kit
DV-8DP-E15KSS	8" DuraPlus 15° elbow kit (SS)
DV-8DP-E30KSS	8" DuraPlus 30° elbow kit (SS)
DV-8DP-WS	8" DuraPlus wall strap
DV-8DP-ES	8" DuraPlus elbow strap
DV-8DP-AWS	8" DuraPlus adjustable wall strap
DV-8DP-WSSS	8" DuraPlus wall strap (SS)
DV-8DP-FRS	8" DuraPlus firestop radiation shield
DV-8DP-XRB	8" DuraPlus extended roof bracket
DV-6DP-SC	6-8 Storm collar
DV-8DP-F6	8" DuraPlus flashing 0/12-6/12
DV-8DP-FF	8" DuraPlus flat roof flashing
DV-8DP-F12	8" DuraPlus flashing 7/12-12/12
DV-8DP-06	8x6 DuraPlus pipe
DV-8DP-09	8x9 DuraPlus pipe
DV-8DP-12	8x12 DuraPlus pipe
DV-8DP-24	8x24 DuraPlus pipe
DV-8DP-24SS	8x24 DuraPlus pipe (SS)
DV-8DP-36	8x36 DuraPlus pipe
DV-8DP-36SS	8x36 DuraPlus pipe (SS)
DV-8DP-VC	8" DuraPlus chimney cap
DV-6DP-IS	Attic Insulation Shield

B. Accessories

Lintel Bar
LINTEL- Lintel Bar
Finishing Template
TMP-PIIIA
TMP-PIIIR
Heat-Zone-WD

C. Offset Diagrams

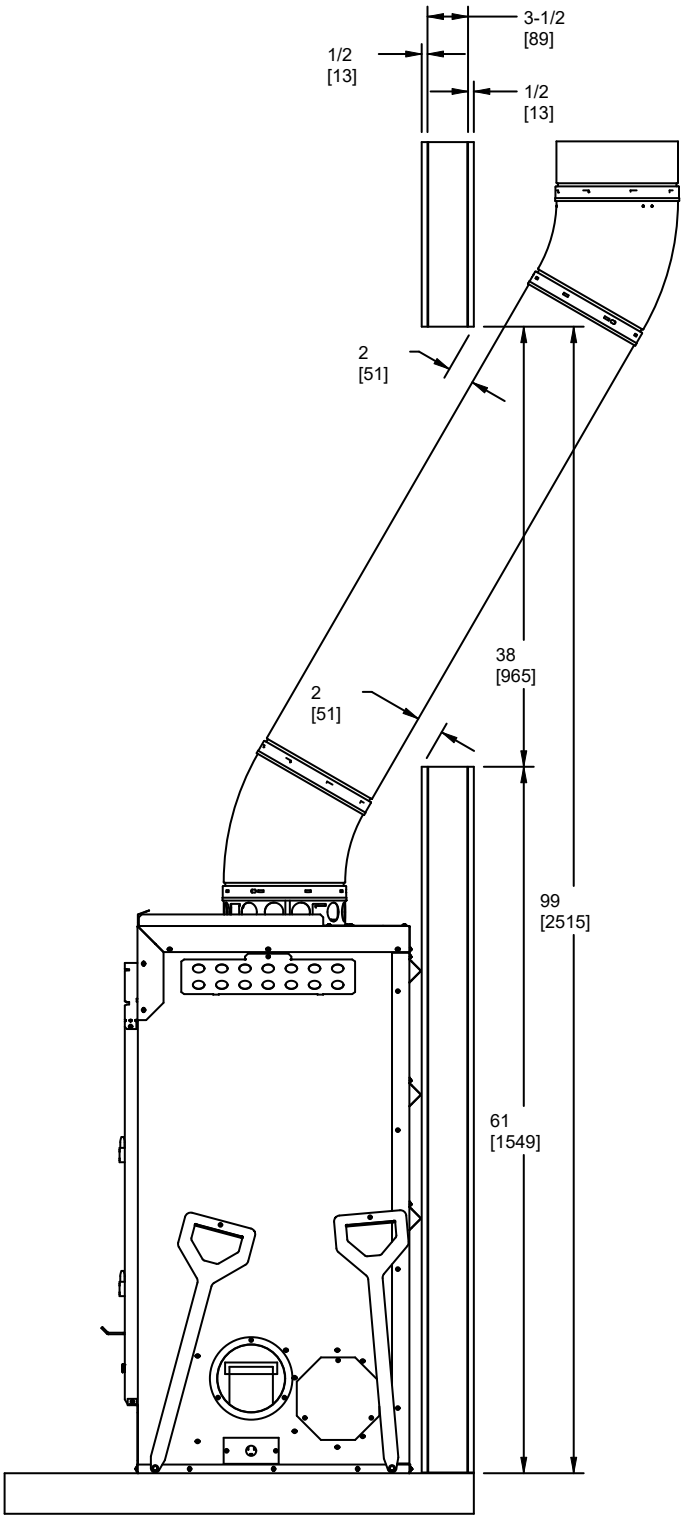

Offest for 2x4 Wall Construction

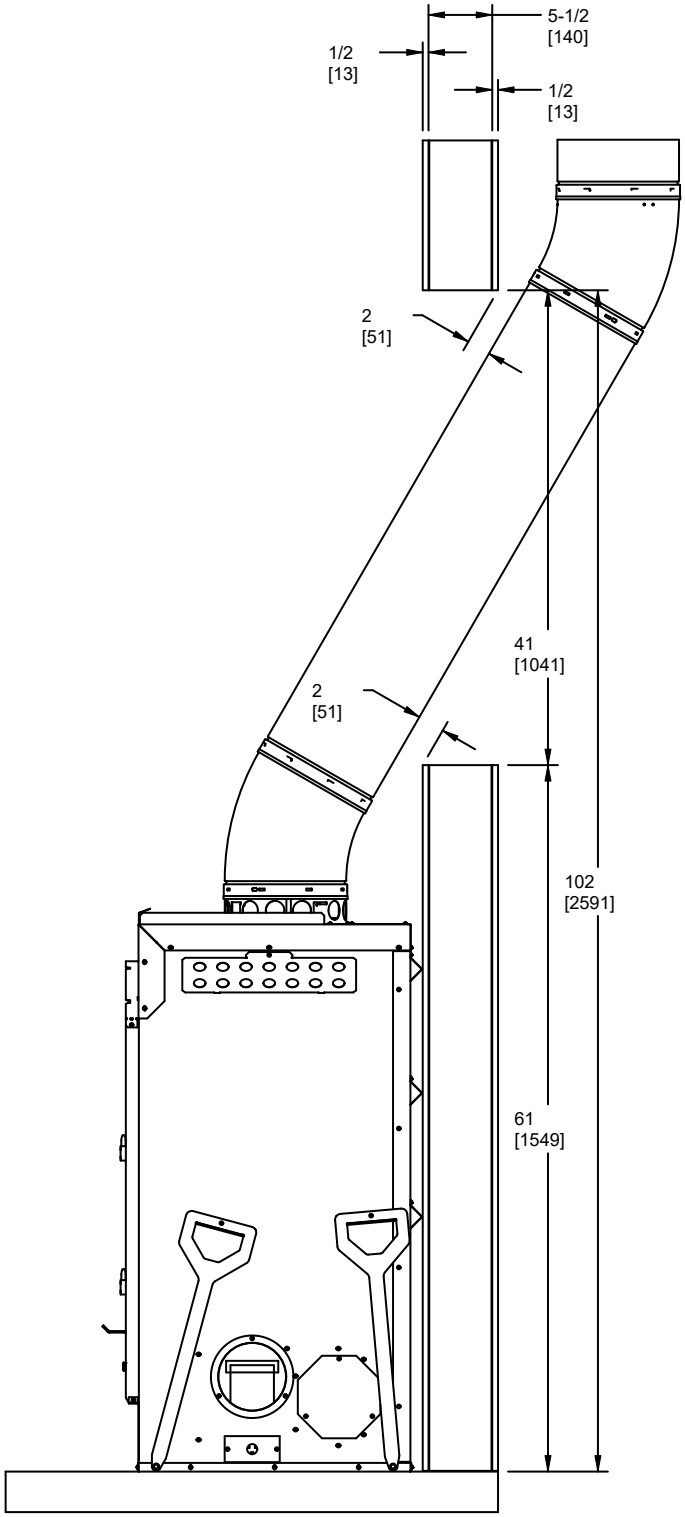

Offset for 2x6 Wall Construction

Hearth & Home Technologies
1915 West Saunders Street, Mount Pleasant, Iowa 52641
www.fireplaces.com

Please contact your dealer with any questions or concerns.
For the location of your nearest dealer, please visit www.fireplaces.com.

Appendix C: Calibrations

Established 1974

QUALITY CONTROL SERVICES

LABORATORY EQUIPMENT • SALES • SERVICE • CALIBRATION • REPAIRS
2340 SE 11TH Ave. Portland, Oregon 97214 • Box 14831 Portland, Oregon 97293
(503) 236-2712 • FAX (503) 235-2535 • www.qc-services.com

A2LA ACCREDITED
CERTIFICATE #1550.01

PFS Teco
11785 SE Hwy 212 STE#305
Clackamas, OR 97015

Report Number: DIRI0182484A0912013i231228

A2LA ACCREDITED
CERTIFICATE OF CALIBRATION WITH DATA

INSTRUMENT INFORMATION

Item	Make	Model	Serial Number	Customer ID	Location
Scale	Digiweigh	DWP12i 300kg x 0.	82484A0912013i	#050	Lab
Units	**Readability**	**SOP**	**Cal Date**	**Last Cal Date**	**Cal Due Date**
lbs	0.01	QC033	12/28/23	12/14/22	12/2024

FUNCTIONAL CHECKS

SHIFT TEST	LINEARITY	REPEATABILITY	ENVIRONMENTAL CONDITIONS
Test Wt: 100 / Tol: 0.05	Test Wt: HB44 / Tol: HB44	Test Wt: 100 / Tol: 0.01	☐ Good ☑ Fair ☐ Poor
As-Found: Pass:☑ Fail:☐	As-Found: Pass:☑ Fail:☐	As-Found: Pass:☑ Fail:☐	Temperature: 19.3°C
As-Left: Pass:☑ Fail:☐	As-Left: Pass:☑ Fail:☐	As-Left: Pass:☑ Fail:☐	

CALIBRATION DATA

Standard	As-Found	As-Left	Expanded Uncertainty
400	399.87	400.01	0.006
200	200.00	200.00	0.005
100	100.02	100.02	0.005
75	75.02	75.02	0.005
50	50.02	50.02	0.005
25	25.00	25.00	0.005

CALIBRATION STANDARDS

Item	Make	Model	Serial Number	Cal Date	Cal Due Date	NIST ID
Avoirdupois Cast W	Rice Lake	25 and 50lb	PWO990-CA	7/18/22	7/2024	20221688

Permanent Information Concerning this Equipment:

Comments/Information Concerning this Calibration

12/28/23: RH-42.5%

Report prepared/reviewed by: R.B. **Date:** 12-28-23 **Technician:** C.Call

Signature: [signature]

THIS CERTIFICATE SHALL NOT BE REPRODUCED, EXCEPT IN FULL, WITHOUT THE APPROVAL OF QUALITY CONTROL SERVICES, INC.

The uncertainty is calculated according to the ISO Guide to the Expression of Uncertainty in Measurement and includes the uncertainty of standards used combined with the observed standard deviation of the unit under test. The uncertainty is expanded with a k factor of 2 for an approximate 95% level of confidence. Instruments listed above were calibrated using standards traceable to the National Institute of Standards and Technology (NIST). Calibration data reflect results at the time and location of calibration. Calibration data should be reviewed to insure that the instrument is performing to its required accuracy. Calibrations comply with ISO/IEC 17025 and ANSI/Z540-1-1994 quality standards.

Member: National Conference of Standards Laboratories and Weights & Measures

PT ID: DIRI01

Dry Gas Meter Calibration

DUT	
Manufacturer:	APEX
Model:	XC-60
Lab ID #:	53
Serial #:	1902130
Calibration Date:	2/1/2024
Calibration Expiration:	8/1/2024
Barometric Pressure:	29.34 in. Hg

Equipment Used:	Ref. Std. DGM	Thermometer	Barometer	Manometer
Manufacturer:	Apex	NI	Aquatech	Dwyer
Model:	SK25DA	NI-9213	DBX2	475
Lab ID#:	47	215	202	174
Calibration Expiration Date:	4/17/2024	2/28/2024	5/23/2024	4/21/2024
Calibration γ Factor:	0.9988			

Use in accordance with EPA Method 5, sections 10.3 and 16.1. Use only calibrated, NIST traceable reference standard DGM. Caibrate over expected operating flow range of DUT.

Calibration Data	Run 1	Run 2	Run 3
Standard DGM Initial Volume (L)	0.000	0.000	0.000
Standard DGM Final Volume (L)	152.041	148.633	164.152
Standard DGM Temperature (°F)	74.0	75.0	75.0
Standard DGM Pressure (in H_2O)	0.00	0.00	0.0
DGM Initial Volume (ft^3)	0.000	0.000	0.000
DGM Final Volume (ft^3)	5.491	5.416	6.003
DGM Temperature (°F)	96.0	98.0	100.0
DGM Pressure (in H_2O)	4.55	1.83	2.90
Net Volume for Standard DGM (ft^3)	5.369	5.249	5.797
Net Volume for DGM (ft^3)	5.491	5.416	6.003

Dry Gas Meter γ Factor	1.005	1.005	1.002
γ Factor Deviation From Average	1.005	1.005	1.002

Average Gas Meter γ Factor: 1.004

Measurement Uncertainty: Total measurement uncertainty +/- 0.748% RD, K=2

Calculations:

1. Deviation = |Average value for all runs - current run value|
2. $\gamma = [V_{std} \times (\gamma_{Std}) \times (P_{bar}+P_{std}/13.6) \times (T_{DGM} + 460)] / [V_{DGM} \times (T_{std} + 460) \times (P_{bar} + P_{DGM}/ 13.6)]$

Technician:

Report and Certificate of Calibration

CAL-CERT™ CALIBRATION CERTIFICATION

www.Cal-Cert.com

Toll Free 800-356-4662

Address 5777 SE International Way Milwaukie, OR 97222

Local 503-654-9620

ACCREDITED CERT #4986.01

Report #:	28140-203323-14	**Customer PO#:** 1090	
Customer Name:	PFS TECO		
Customer Address:	11785 SE Highway 212 Ste 305		
City:	Clackamas	**State:** OR	**Zip:** 97015
Contact:	Aaron Kravitz		
Service Address:	11785 SE Highway 212 Ste 305	Clackamas, OR 97015	

Calibration Standards

19-00269 | Thermo-Hygrometer | Comark | SN: 6237360167 | Cal: 09/14/2022 | Due: 08/31/2023 | Vendor: Cal-Cert | Range: 122 °F 95 %RH | Report #: 25699-30694-3486
LA-01776 | Pressure Transducer | Fluke | SN: 5956001 | Cal: 11/25/2022 | Due: 11/25/2023 | Range: 10 in H2O | Report #: EVL846346

Instrument Data

Calibration Date:	March 1, 2023	**Reference:**	ASME B40.100
Recommended Due Date:	March 1, 2024	**Cal-Cert Procedure:**	CP-003
Calibration Frequency:	12 Months	**Indicating System:**	Digital
Manufacturer:	Unknown	**Temperature:**	69 °F
Type:	Pressure Transducer	**Humidity:**	36% RH
Model Number:	Unknown	**Cal Factor:**	None
Serial #:	Unknown	**Asset #:**	53B
Capacity:	1 In H2O	**Service Location:**	Service Address
Tolerance:	± 1.00% of Span	**As Found:**	Pass
Gauge Class:	A	**As Left:**	Pass

Instrument Range: 1.00 **Range Resolution:** 0.01 **Mode Verified:** Pressure

UUT Reading In H2O	Standard As Found In H2O	Standard Verification Reading #1 In H2O	Error In H2O	Standard Verification Reading #2 In H2O	Error In H2O	Tolerance In H2O	Expanded Uncertainty ± In H2O
0.00	0.00	0.00	0.00	0.00	0.00	0.01	0.005
0.10	0.10	0.10	0.00	0.10	0.00	0.01	0.005
0.25	0.25	0.25	0.00	0.25	0.00	0.01	0.005
0.50	0.50	0.50	0.00	0.50	0.00	0.01	0.005
0.75	0.75	0.75	0.00	0.75	0.00	0.01	0.005
1.00	1.00	1.00	0.00	1.00	0.00	0.01	0.005
0.75	0.75	0.75	0.00	0.75	0.00	0.01	0.005
0.50	0.50	0.50	0.00	0.50	0.00	0.01	0.005
0.25	0.25	0.25	0.00	0.25	0.00	0.01	0.005
0.10	0.10	0.10	0.00	0.10	0.00	0.01	0.005
0.00	0.00	0.00	0.00	0.00	0.00	0.01	0.005

Copyright 2013 Cal-Cert. All rights reserved.

Manufacturer: Unknown **Type:** Pressure Transducer **Serial #:** Unknown

Remarks:

We sincerely thank you for your business. Please call us at 503-654-9620 for all your sales and calibration needs.
Cleaning and preventative maintenance were performed as part of this service.

Cal-Cert is accredited by A2LA under Calibration Laboratory Code #4986.01.
A2LA is recognized under the ILAC mutual recognition agreement (MRA).

This certificate is hereby issued that the above instrument was tested for accuracy with calibrated standards traceable to the National Institute of Standards and Technology (NIST). The information provided on this form complies with the data gathering and reporting requirements of ISO/IEC 17025 and ANSI/NCSL Z540.1, and meets the requirements of all applicable references and Cal-Cert procedures listed above.
Any stated measurement uncertainty includes the uncertainty of the Calibration standards used, combined with the uncertainty of the measurement process using the RSS method with a k=2 for an approximate 95% level of confidence. The calibration process meets or exceeds a ratio of 4:1 unless otherwise stated.
All tolerances were derived from the applicable standards and pass/fail determination is based on those tolerances. The customer determined any recommended due dates indicated on the certificate.

This report shall not be reproduced except in full, without written approval from Cal-Cert.

Service Engineer: Jon Rau **Date:** March 1, 2023

Technical Manager: Marshall Doyle **Signature:** MDoyle

Report #: 28140-203323-14

Copyright 2013 Cal-Cert. All rights reserved.

Report and Certificate of Calibration

CAL-CERT
CALIBRATION CERTIFICATION

www.Cal-Cert.com

Toll Free 800-356-4662

Address 5777 SE International Way
Milwaukie, OR 97222

Local 503-654-9620

ACCREDITED
CERT #4986.01

Report #: 33086-203324-4525 **Customer PO#:** 1109
Customer Name: PFS TECO
Customer Address: 1507 Matt Pass
City: Cottage Grove **State:** WI **Zip:** 53527
Contact: Ethan Frederick
Service Address: 11785 SE Highway 212, Suite 305 Clackamas, OR 97015

Calibration Standards

10-01442 | Compound Gauge | Fluke | SN: 4582643 | Cal: 01/26/2024 | Due: 01/31/2025 | Vendor: Fluke | Report #: EVL943251
LP-01782 | Thermo-Hygrometer | Comark | SN: 06247790052 | Cal: 01/24/2024 | Due: 01/31/2025 | Range: 122 °F 95 %RH | Report #: 32568-205513-3646

Instrument Data

Calibration Date:	February 26, 2024	**Reference:**	ASME B40.100
Recommended Due Date:	February 26, 2025	**Cal-Cert Procedure:**	CP-003
Calibration Frequency:	12 Months	**Indicating System:**	Digital
Manufacturer:	Newport Industries	**Temperature:**	67 °F
Type:	Pressure Transducer	**Humidity:**	36% RH
Model Number:	Unknown	**Cal Factor:**	None
Serial #:	Unknown	**Asset #:**	53C
Capacity:	5 PSI	**Service Location:**	Service Address
Tolerance:	± 1.00% of Span	**As Found:**	Pass
Gauge Class:	A	**As Left:**	Pass

Instrument Range: 5.00 **Range Resolution:** 0.01 **Mode Verified:** Pressure

UUT Reading PSI	Standard As Found PSI	Standard Verification Reading #1 PSI	Error PSI	Standard Verification Reading #2 PSI	Error PSI	Tolerance PSI	Expanded Uncertainty ± PSI
0.00	0.00	0.00	0.00	0.00	0.00	0.05	0.005
0.50	0.50	0.50	0.00	0.50	0.00	0.05	0.006
1.25	1.23	1.23	-0.02	1.22	-0.03	0.05	0.028
2.50	2.46	2.46	-0.04	2.46	-0.04	0.05	0.007
3.75	3.71	3.71	-0.04	3.71	-0.04	0.05	0.007
5.00	4.95	4.95	-0.05	4.96	-0.04	0.05	0.024
3.75	3.71	3.71	-0.04	3.72	-0.03	0.05	0.027
2.50	2.46	2.46	-0.04	2.46	-0.04	0.05	0.019
1.25	1.24	1.24	-0.01	1.23	-0.02	0.05	0.021
0.50	0.51	0.51	0.01	0.50	0.00	0.05	0.008
0.00	0.03	0.03	0.03	0.00	0.00	0.05	0.005

Copyright 2013 Cal-Cert. All rights reserved.

Manufacturer: Newport Industries **Type:** Pressure Transducer **Serial #:** Unknown

Remarks:

We sincerely thank you for your business. Please call us at 503-654-9620 for all your sales and calibration needs.
Cleaning and preventative maintenance were performed as part of this service.

Cal-Cert is accredited by A2LA under Calibration Laboratory Code #4986.01.
A2LA is recognized under the ILAC mutual recognition agreement (MRA).

This certificate is hereby issued that the above instrument was tested for accuracy with calibrated standards traceable to the National Institute of Standards and Technology (NIST). The information provided on this form complies with the data gathering and reporting requirements of ISO/IEC 17025 and ANSI/NCSL Z540.1, and meets the requirements of all applicable references and Cal-Cert procedures listed above.
Any stated measurement uncertainty includes the uncertainty of the Calibration standards used, combined with the uncertainty of the measurement process using the RSS method with a k=2 for an approximate 95% level of confidence. The calibration process meets or exceeds a ratio of 4:1 unless otherwise stated.
All tolerances were derived from the applicable standards and pass/fail determination is based on those tolerances. The customer determined any recommended due dates indicated on the certificate.

This report shall not be reproduced except in full, without written approval from Cal-Cert.

Service Engineer: Steven White **Date:** February 26, 2024

Technical Manager: Marshall Doyle **Signature:** MDoyle

Report #: 33086-203324-4525

Copyright 2013 Cal-Cert. All rights reserved.

Dry Gas Meter Calibration

DUT	
Manufacturer:	APEX
Model:	XC-60
Lab ID #:	54
Serial #:	1902133
Calibration Date:	2/1/2024
Calibration Expiration:	8/1/2024
Barometric Pressure:	29.34 in. Hg

Equipment Used:	Ref. Std. DGM	Thermometer	Barometer	Manometer
Manufacturer:	Apex	NI	Aquatech	Dwyer
Model:	SK25DA	NI-9213	DBX2	475
Lab ID#:	47	215	202	174
Calibration Expiration Date:	4/17/2024	2/28/2024	5/23/2024	4/21/2024
Calibration γ Factor:	0.9988			

Use in accordance with EPA Method 5, sections 10.3 and 16.1. Use only calibrated, NIST traceable reference standard DGM. Caibrate over expected operating flow range of DUT.

Calibration Data	Run 1	Run 2	Run 3
Standard DGM Initial Volume (L)	0.000	0.000	0.000
Standard DGM Final Volume (L)	148.890	148.972	150.647
Standard DGM Temperature (°F)	75.0	75.0	75.0
Standard DGM Pressure (in H_2O)	0.00	0.00	0.0
DGM Initial Volume (ft^3)	0.000	0.000	0.000
DGM Final Volume (ft^3)	5.418	5.418	5.520
DGM Temperature (°F)	101.0	101.0	101.0
DGM Pressure (in H_2O)	3.96	4.95	2.02
Net Volume for Standard DGM (ft^3)	5.258	5.261	5.320
Net Volume for DGM (ft^3)	5.418	5.418	5.520

Dry Gas Meter γ Factor	1.006	1.005	1.004
γ Factor Deviation From Average	1.006	1.005	1.004

Average Gas Meter γ Factor: 1.005

Measurement Uncertainty: Total measurement uncertainty +/- 0.748% RD, K=2

Calculations:

1. Deviation = |Average value for all runs - current run value|
2. $\gamma = [V_{std} \times (\gamma_{Std}) \times (P_{bar}+P_{std}/13.6) \times (T_{DGM} + 460)] / [V_{DGM} \times (T_{std} + 460) \times (P_{bar} + P_{DGM}/ 13.6)]$

Technician:

Report and Certificate of Calibration

www.Cal-Cert.com

Toll Free 800-356-4662

Address 5777 SE International Way
Milwaukie, OR 97222

Local 503-654-9620

Report #:	28140-203325-14	**Customer PO#:** 1090	
Customer Name:	PFS TECO		
Customer Address:	11785 SE Highway 212 Ste 305		
City:	Clackamas	**State:** OR	**Zip:** 97015
Contact:	Aaron Kravitz		
Service Address:	11785 SE Highway 212 Ste 305	Clackamas, OR 97015	

Calibration Standards

19-00269 | Thermo-Hygrometer | Comark | SN: 6237360167 | Cal: 09/14/2022 | Due: 08/31/2023 | Vendor: Cal-Cert | Range: 122 °F 95 %RH | Report #: 25699-30694-3486
LA-01776 | Pressure Transducer | Fluke | SN: 5956001 | Cal: 11/25/2022 | Due: 11/25/2023 | Range: 10 in H2O | Report #: EVL846346

Instrument Data

Calibration Date:	March 1, 2023	**Reference:**	ASME B40.100
Recommended Due Date:	March 1, 2024	**Cal-Cert Procedure:**	CP-003
Calibration Frequency:	12 Months	**Indicating System:**	Digital
Manufacturer:	Newport	**Temperature:**	68 °F
Type:	Pressure Transducer	**Humidity:**	37% RH
Model Number:	Unknown	**Cal Factor:**	None
Serial #:	Unknown	**Asset #:**	54B
Capacity:	1 In H2O	**Service Location:**	Service Address
Tolerance:	± 1.00% of Span	**As Found:**	Pass
Gauge Class:	A	**As Left:**	Pass

Instrument Range: 1.00 **Range Resolution:** 0.01 **Mode Verified:** Pressure

UUT Reading In H2O	Standard As Found In H2O	Standard Verification Reading #1 In H2O	Error In H2O	Standard Verification Reading #2 In H2O	Error In H2O	Tolerance In H2O	Expanded Uncertainty ± In H2O
0.00	0.00	0.00	0.00	0.00	0.00	0.01	0.005
0.10	0.10	0.10	0.00	0.10	0.00	0.01	0.005
0.25	0.25	0.25	0.00	0.25	0.00	0.01	0.005
0.50	0.50	0.50	0.00	0.50	0.00	0.01	0.005
0.75	0.75	0.75	0.00	0.75	0.00	0.01	0.005
1.00	0.99	0.99	-0.01	0.99	-0.01	0.01	0.005
0.75	0.75	0.75	0.00	0.75	0.00	0.01	0.005
0.50	0.50	0.50	0.00	0.50	0.00	0.01	0.005
0.25	0.25	0.25	0.00	0.25	0.00	0.01	0.005
0.10	0.10	0.10	0.00	0.10	0.00	0.01	0.005
0.00	0.00	0.00	0.00	0.00	0.00	0.01	0.005

Copyright 2013 Cal-Cert. All rights reserved.

Manufacturer: Newport **Type:** Pressure Transducer **Serial #:** Unknown

Remarks:

We sincerely thank you for your business. Please call us at 503-654-9620 for all your sales and calibration needs.
Cleaning and preventative maintenance were performed as part of this service.

Cal-Cert is accredited by A2LA under Calibration Laboratory Code #4986.01.
A2LA is recognized under the ILAC mutual recognition agreement (MRA).

This certificate is hereby issued that the above instrument was tested for accuracy with calibrated standards traceable to the National Institute of Standards and Technology (NIST). The information provided on this form complies with the data gathering and reporting requirements of ISO/IEC 17025 and ANSI/NCSL Z540.1, and meets the requirements of all applicable references and Cal-Cert procedures listed above.
Any stated measurement uncertainty includes the uncertainty of the Calibration standards used, combined with the uncertainty of the measurement process using the RSS method with a k=2 for an approximate 95% level of confidence. The calibration process meets or exceeds a ratio of 4:1 unless otherwise stated.
All tolerances were derived from the applicable standards and pass/fail determination is based on those tolerances. The customer determined any recommended due dates indicated on the certificate.

This report shall not be reproduced except in full, without written approval from Cal-Cert.

Service Engineer: Jon Rau **Date:** March 1, 2023

Technical Manager: Marshall Doyle **Signature:** MDoyle

Report #: 28140-203325-14

Copyright 2013 Cal-Cert. All rights reserved.

Report and Certificate of Calibration

www.Cal-Cert.com

Toll Free 800-356-4662

Address 5777 SE International Way Milwaukie, OR 97222

Local 503-654-9620

Report #: 28140-203326-14 **Customer PO#:** 1090
Customer Name: PFS TECO
Customer Address: 11785 SE Highway 212 Ste 305
City: Clackamas **State:** OR **Zip:** 97015
Contact: Aaron Kravitz
Service Address: 11785 SE Highway 212 Ste 305 Clackamas, OR 97015

Calibration Standards

19-00269 | Thermo-Hygrometer | Comark | SN: 6237360167 | Cal: 09/14/2022 | Due: 08/31/2023 | Vendor: Cal-Cert | Range: 122 °F 95 %RH | Report #: 25699-30694-3486
LA-01776 | Pressure Transducer | Fluke | SN: 5956001 | Cal: 11/25/2022 | Due: 11/25/2023 | Range: 10 in H2O | Report #: EVL846346

Instrument Data

Calibration Date:	March 1, 2023	**Reference:**	ASME B40.100
Recommended Due Date:	March 1, 2024	**Cal-Cert Procedure:**	CP-003
Calibration Frequency:	12 Months	**Indicating System:**	Digital
Manufacturer:	Newport	**Temperature:**	73 °F
Type:	Pressure Transducer	**Humidity:**	30% RH
Model Number:	Unknown	**Cal Factor:**	None
Serial #:	Unknown	**Asset #:**	54C
Capacity:	5 In H2O	**Service Location:**	Service Address
Tolerance:	± 1.00% of Span	**As Found:**	Pass
Gauge Class:	A	**As Left:**	Pass

Instrument Range: 5.00 **Range Resolution:** 0.01 **Mode Verified:** Pressure

UUT Reading In H2O	Standard As Found In H2O	Standard Verification Reading #1 In H2O	Error In H2O	Standard Verification Reading #2 In H2O	Error In H2O	Tolerance In H2O	Expanded Uncertainty ± In H2O
0.00	0.00	0.00	0.00	0.00	0.00	0.05	0.005
0.50	0.50	0.50	0.00	0.50	0.00	0.05	0.005
1.25	1.25	1.25	0.00	1.25	0.00	0.05	0.005
2.50	2.50	2.50	0.00	2.50	0.00	0.05	0.006
3.75	3.75	3.75	0.00	3.75	0.00	0.05	0.007
5.00	5.00	5.00	0.00	5.00	0.00	0.05	0.008
3.75	3.75	3.75	0.00	3.75	0.00	0.05	0.007
2.50	2.50	2.50	0.00	2.50	0.00	0.05	0.006
1.25	1.25	1.25	0.00	1.25	0.00	0.05	0.005
0.50	0.50	0.50	0.00	0.50	0.00	0.05	0.005
0.00	0.00	0.00	0.00	0.00	0.00	0.05	0.005

Copyright 2013 Cal-Cert. All rights reserved.

Manufacturer: Newport **Type:** Pressure Transducer **Serial #:** Unknown

Remarks:

We sincerely thank you for your business. Please call us at 503-654-9620 for all your sales and calibration needs.
Cleaning and preventative maintenance were performed as part of this service.

Cal-Cert is accredited by A2LA under Calibration Laboratory Code #4986.01.
A2LA is recognized under the ILAC mutual recognition agreement (MRA).

This certificate is hereby issued that the above instrument was tested for accuracy with calibrated standards traceable to the National Institute of Standards and Technology (NIST). The information provided on this form complies with the data gathering and reporting requirements of ISO/IEC 17025 and ANSI/NCSL Z540.1, and meets the requirements of all applicable references and Cal-Cert procedures listed above.
Any stated measurement uncertainty includes the uncertainty of the Calibration standards used, combined with the uncertainty of the measurement process using the RSS method with a k=2 for an approximate 95% level of confidence. The calibration process meets or exceeds a ratio of 4:1 unless otherwise stated.
All tolerances were derived from the applicable standards and pass/fail determination is based on those tolerances. The customer determined any recommended due dates indicated on the certificate.

This report shall not be reproduced except in full, without written approval from Cal-Cert.

Service Engineer: Jon Rau **Date:** March 1, 2023

Technical Manager: Marshall Doyle **Signature:** MDoyle

Report #: 28140-203326-14

Copyright 2013 Cal-Cert. All rights reserved.

Dry Gas Meter Calibration

DUT	
Manufacturer:	APEX
Model:	XC-60
Lab ID #:	55
Serial #:	1902130
Calibration Date:	2/5/2024
Calibration Expiration:	8/5/2024
Barometric Pressure:	29.39 in. Hg

Equipment Used:	Ref. Std. DGM	Thermometer	Barometer	Manometer
Manufacturer:	Apex	NI	Aquatech	Dwyer
Model:	SK25DA	NI-9213	DBX2	475
Lab ID#:	47	215	202	174
Calibration Expiration Date:	4/17/2024	2/28/2024	5/23/2024	4/21/2024
Calibration γ Factor:	0.9988			

Use in accordance with EPA Method 5, sections 10.3 and 16.1. Use only calibrated, NIST traceable reference standard DGM. Caibrate over expected operating flow range of DUT.

Calibration Data	Run 1	Run 2	Run 3
Standard DGM Initial Volume (L)	0.000	0.000	0.000
Standard DGM Final Volume (L)	202.311	156.489	164.235
Standard DGM Temperature (°F)	72.0	72.0	74.0
Standard DGM Pressure (in H_2O)	0.00	0.00	0.0
DGM Initial Volume (ft^3)	0.000	0.000	0.000
DGM Final Volume (ft^3)	7.085	5.526	5.749
DGM Temperature (°F)	77.0	77.0	78.0
DGM Pressure (in H_2O)	0.00	0.00	0.0
Net Volume for Standard DGM (ft^3)	7.145	5.526	5.800
Net Volume for DGM (ft^3)	7.085	5.526	5.749

Dry Gas Meter γ Factor	1.017	1.008	1.015
γ Factor Deviation From Average	1.017	1.008	1.015

Average Gas Meter γ Factor: 1.013

Measurement Uncertainty: Total measurement uncertainty +/- 0.748% RD, K=2

Calculations:

1. Deviation = |Average value for all runs - current run value|
2. $\gamma = [V_{std} \times (\gamma_{Std}) \times (P_{bar}+P_{std}/13.6) \times (T_{DGM} + 460)] / [V_{DGM} \times (T_{std} + 460) \times (P_{bar} + P_{DGM}/ 13.6)]$

Technician: _____

Dry Gas Meter Calibration

DUT	
Manufacturer:	APEX
Model:	XC-50-DIR
Lab ID #:	203
Serial #:	A2204292
Calibration Date:	2/2/2024
Calibration Expiration:	8/2/2024
Barometric Pressure:	29.55 in. Hg

Equipment Used:	Ref. Std. DGM	Thermometer	Barometer	Manometer
Manufacturer:	Apex	NI	Aquatech	Dwyer
Model:	SK25DA	NI-9213	DBX2	475
Lab ID#:	47	215	202	174
Calibration Expiration Date:	4/17/2024	2/28/2024	5/23/2024	4/21/2024
Calibration γ Factor:	0.9988			

Use in accordance with EPA Method 5, sections 10.3 and 16.1. Use only calibrated, NIST traceable reference standard DGM. Caibrate over expected operating flow range of DUT.

Calibration Data	Run 1	Run 2	Run 3
Standard DGM Initial Volume (L)	0.000	0.000	0.000
Standard DGM Final Volume (L)	137.050	146.311	151.880
Standard DGM Temperature (°F)	67.0	66.0	67.0
Standard DGM Pressure (in H_2O)	0.0	0.00	0.0
DGM Initial Volume (ft^3)	0.000	0.000	0.000
DGM Final Volume (ft^3)	5.006	5.317	5.489
DGM Temperature (°F)	88.0	86.0	88.0
DGM Pressure (in H_2O)	1.06	1.52	2.81
Net Volume for Standard DGM (ft^3)	4.840	5.167	5.364
Net Volume for DGM (ft^3)	5.006	5.317	5.489

Dry Gas Meter γ Factor	1.001	1.004	1.008
γ Factor Deviation From Average	1.001	1.004	1.008

Average Gas Meter γ Factor: 1.004

Measurement Uncertainty: Total measurement uncertainty +/- 0.748% RD, K=2

Calculations:

1. Deviation = |Average value for all runs - current run value|
2. $\gamma = [V_{std} \times (\gamma_{Std}) \times (P_{bar}+P_{std}/13.6) \times (T_{DGM} + 460)] / [V_{DGM} \times (T_{std} + 460) \times (P_{bar} + P_{DGM}/ 13.6)]$

Technician:

Report and Certificate of Calibration

CAL-CERT CALIBRATION CERTIFICATION

www.Cal-Cert.com

Toll Free 800-356-4662

Address 5777 SE International Way Milwaukie, OR 97222

Local 503-654-9620

ACCREDITED CERT #4986.01

Report #:	28140-203319-14	**Customer PO#:** 1090	
Customer Name:	PFS TECO		
Customer Address:	11785 SE Highway 212 Ste 305		
City:	Clackamas	**State:** OR	**Zip:** 97015
Contact:	Aaron Kravitz		
Service Address:	11785 SE Highway 212 Ste 305	Clackamas, OR 97015	

Calibration Standards

19-00269 | Thermo-Hygrometer | Comark | SN: 6237360167 | Cal: 09/14/2022 | Due: 08/31/2023 | Vendor: Cal-Cert | Range: 122 °F 95 %RH | Report #: 25699-30694-3486
LA-01776 | Pressure Transducer | Fluke | SN: 5956001 | Cal: 11/25/2022 | Due: 11/25/2023 | Range: 10 in H2O | Report #: EVL846346

Instrument Data

Calibration Date:	March 1, 2023	**Reference:**	ASME B40.100
Recommended Due Date:	March 1, 2024	**Cal-Cert Procedure:**	CP-003
Calibration Frequency:	12 Months	**Indicating System:**	Digital
Manufacturer:	Red Lion	**Temperature:**	69 °F
Type:	Pressure Transducer	**Humidity:**	35% RH
Model Number:	Unknown	**Cal Factor:**	None
Serial #:	Unknown	**Asset #:**	203B
Capacity:	1 In H2O	**Service Location:**	Service Address
Tolerance:	± 1.00% of Span	**As Found:**	Pass
Gauge Class:	A	**As Left:**	Pass

Instrument Range: 1.00 **Range Resolution:** 0.001 **Mode Verified:** Pressure

UUT Reading In H2O	Standard As Found In H2O	Standard Verification Reading #1 In H2O	Error In H2O	Standard Verification Reading #2 In H2O	Error In H2O	Tolerance In H2O	Expanded Uncertainty ± In H2O
0.000	0.000	0.000	0.00	0.000	0.00	0.01	0.0005
0.100	0.100	0.100	0.00	0.100	0.00	0.01	0.0005
0.250	0.250	0.250	0.00	0.250	0.00	0.01	0.0006
0.500	0.500	0.500	0.00	0.500	0.00	0.01	0.0008
0.750	0.750	0.750	0.00	0.750	0.00	0.01	0.001
1.000	1.000	1.000	0.00	1.000	0.00	0.01	0.0012
0.750	0.750	0.750	0.00	0.750	0.00	0.01	0.001
0.500	0.500	0.500	0.00	0.500	0.00	0.01	0.0008
0.250	0.250	0.250	0.00	0.250	0.00	0.01	0.0006
0.100	0.100	0.100	0.00	0.100	0.00	0.01	0.0005
0.000	0.000	0.000	0.00	0.000	0.00	0.01	0.0005

Copyright 2013 Cal-Cert. All rights reserved.

Manufacturer: Red Lion **Type:** Pressure Transducer **Serial #:** Unknown

Remarks:

We sincerely thank you for your business. Please call us at 503-654-9620 for all your sales and calibration needs.
Cleaning and preventative maintenance were performed as part of this service.

Cal-Cert is accredited by A2LA under Calibration Laboratory Code #4986.01.
A2LA is recognized under the ILAC mutual recognition agreement (MRA).

This certificate is hereby issued that the above instrument was tested for accuracy with calibrated standards traceable to the National Institute of Standards and Technology (NIST). The information provided on this form complies with the data gathering and reporting requirements of ISO/IEC 17025 and ANSI/NCSL Z540.1, and meets the requirements of all applicable references and Cal-Cert procedures listed above.
Any stated measurement uncertainty includes the uncertainty of the Calibration standards used, combined with the uncertainty of the measurement process using the RSS method with a k=2 for an approximate 95% level of confidence. The calibration process meets or exceeds a ratio of 4:1 unless otherwise stated.
All tolerances were derived from the applicable standards and pass/fail determination is based on those tolerances. The customer determined any recommended due dates indicated on the certificate.

This report shall not be reproduced except in full, without written approval from Cal-Cert.

Service Engineer: Jon Rau **Date:** March 1, 2023

Technical Manager: Marshall Doyle **Signature:** MDoyle

Report #: 28140-203319-14

Copyright 2013 Cal-Cert. All rights reserved.

Report and Certificate of Calibration

CAL-CERT™ CALIBRATION CERTIFICATION

www.Cal-Cert.com

Toll Free 800-356-4662

Address 5777 SE International Way Milwaukie, OR 97222

Local 503-654-9620

ACCREDITED CERT #4986.01

Report #:	28140-203320-14	**Customer PO#:** 1090	
Customer Name:	PFS TECO		
Customer Address:	11785 SE Highway 212 Ste 305		
City:	Clackamas	**State:** OR	**Zip:** 97015
Contact:	Aaron Kravitz		
Service Address:	11785 SE Highway 212 Ste 305	Clackamas, OR 97015	

Calibration Standards

19-00269 | Thermo-Hygrometer | Comark | SN: 6237360167 | Cal: 09/14/2022 | Due: 08/31/2023 | Vendor: Cal-Cert | Range: 122 °F 95 %RH | Report #: 25699-30694-3486
LA-01776 | Pressure Transducer | Fluke | SN: 5956001 | Cal: 11/25/2022 | Due: 11/25/2023 | Range: 10 in H2O | Report #: EVL846346

Instrument Data

Calibration Date:	March 1, 2023	**Reference:**	ASME B40.100
Recommended Due Date:	March 1, 2024	**Cal-Cert Procedure:**	CP-003
Calibration Frequency:	12 Months	**Indicating System:**	Digital
Manufacturer:	Red Lion	**Temperature:**	73 °F
Type:	Pressure Transducer	**Humidity:**	30% RH
Model Number:	Unknown	**Cal Factor:**	None
Serial #:	Unknown	**Asset #:**	203C
Capacity:	5 In H2O	**Service Location:**	Service Address
Tolerance:	± 1.00% of Span	**As Found:**	Pass
Gauge Class:	A	**As Left:**	Pass

Instrument Range: 5.00 **Range Resolution:** 0.01 **Mode Verified:** Pressure

UUT Reading In H2O	Standard As Found In H2O	Standard Verification Reading #1 In H2O	Error In H2O	Standard Verification Reading #2 In H2O	Error In H2O	Tolerance In H2O	Expanded Uncertainty ± In H2O
0.00	0.00	0.00	0.00	0.00	0.00	0.05	0.005
0.50	0.50	0.50	0.00	0.50	0.00	0.05	0.005
1.25	1.25	1.25	0.00	1.25	0.00	0.05	0.005
2.50	2.50	2.50	0.00	2.50	0.00	0.05	0.006
3.75	3.75	3.75	0.00	3.75	0.00	0.05	0.007
5.00	5.00	5.00	0.00	5.00	0.00	0.05	0.008
3.75	3.75	3.75	0.00	3.75	0.00	0.05	0.007
2.50	2.50	2.50	0.00	2.50	0.00	0.05	0.006
1.25	1.25	1.25	0.00	1.25	0.00	0.05	0.005
0.50	0.50	0.50	0.00	0.50	0.00	0.05	0.005
0.00	0.00	0.00	0.00	0.00	0.00	0.05	0.005

Copyright 2013 Cal-Cert. All rights reserved.

Manufacturer: Red Lion **Type:** Pressure Transducer **Serial #:** Unknown

Remarks:

We sincerely thank you for your business. Please call us at 503-654-9620 for all your sales and calibration needs.
Cleaning and preventative maintenance were performed as part of this service.

Cal-Cert is accredited by A2LA under Calibration Laboratory Code #4986.01.
A2LA is recognized under the ILAC mutual recognition agreement (MRA).

This certificate is hereby issued that the above instrument was tested for accuracy with calibrated standards traceable to the National Institute of Standards and Technology (NIST). The information provided on this form complies with the data gathering and reporting requirements of ISO/IEC 17025 and ANSI/NCSL Z540.1, and meets the requirements of all applicable references and Cal-Cert procedures listed above.
Any stated measurement uncertainty includes the uncertainty of the Calibration standards used, combined with the uncertainty of the measurement process using the RSS method with a k=2 for an approximate 95% level of confidence. The calibration process meets or exceeds a ratio of 4:1 unless otherwise stated.
All tolerances were derived from the applicable standards and pass/fail determination is based on those tolerances. The customer determined any recommended due dates indicated on the certificate.

This report shall not be reproduced except in full, without written approval from Cal-Cert.

Service Engineer: Jon Rau **Date:** March 1, 2023

Technical Manager: Marshall Doyle **Signature:** MDoyle

Report #: 28140-203320-14

Copyright 2013 Cal-Cert. All rights reserved.

Report and Certificate of Calibration

CAL-CERT™ CALIBRATION CERTIFICATION

Portland Laboratory
5777 SE International Way
Milwaukie, OR 97222
800-356-4662
503-654-9620

Anaheim Laboratory
120 S. Chaparral Ct Suite 110
Anaheim Hills, CA 92808
888-700-4100
714-696-5300

www.Cal-Cert.com

Report #: 30452-28785-3646 **Customer PO#:** 1100
Customer Name: PFS TECO
Customer Address: 11785 SE Highway 212, Suite 305
City: Clackamas **State:** OR **Zip:** 97015
Contact: John Steinert
Service Address: 5777 SE International Way Milwaukie, OR 97222

Calibration Standards

LP-00051 | Electrical Meter | Fluke | SN: 9663004 | Cal: 01/10/2023 | Due: 01/10/2024 | Vendor: Fluke | Report #: EVL861119
LP-01333 | Electrical Meter | IET Labs, Inc. | SN: E3-1842499 | Cal: 01/19/2023 | Due: 01/31/2024 | Vendor: Transcat Calibration Lab | Report #: 5-G584Z-20-1
LP-01347 | Thermo-Hygrometer | Comark | SN: 06210350163 | Cal: 04/18/2023 | Due: 04/30/2024 | Vendor: Cal-Cert | Range: 122 °F 95 %RH | Report #: 28945-67214-3646

Instrument Data

Calibration Date:	August 9, 2023	**Reference:**	Manufactures Tolerances
Recommended Due Date:	August 9, 2024	**Cal-Cert Procedure:**	CP-080
Calibration Frequency:	12 Months	**Indicating System:**	Digital
Manufacturer:	Delmhorst	**Temperature:**	74 °F
Type:	Resistivity Meter	**Humidity:**	36% RH
Model Number:	MCS-1	**Asset #:**	#094
Serial #:	#094	**Service Location:**	Cal-Cert Lab
Capacity:	120 Megaohms	**As Found:**	Pass
Tolerance:	3.00 % of indication	**As Left:**	Pass

Instrument Range: 120 Megaohms **Resolution:** 0.001 **Mode Verified:** Resistance

Standard Reading	UUT As Found	UUT Reading #1	Error	UUT Reading #2	Error
0.000	0.000	0.000	0.000	0.000	0.000
1.100	1.095	1.095	-0.005	1.095	-0.005
54.545	54.719	54.719	0.173	54.719	0.173
0.000	0.000	0.000	0.000	0.000	0.000

Expanded Uncertainty± **2.50 Megaohms**

Remarks:

100Mohm std Parallel with 120Mohm UUT= 54.545Mohms

We sincerely thank you for your business. Please call us at 503-654-9620 for all your sales and calibration needs.
Cleaning and preventative maintenance were performed as part of this service.

This certificate is hereby issued that the above instrument was tested for accuracy with calibrated standards traceable to the National Institute of Standards and Technology (NIST). The information provided on this form complies with the data gathering and reporting requirements of ANSI/NCSL Z540.1, and meets the requirements of all applicable references and Cal-Cert procedures listed above.
Any stated measurement uncertainty includes the uncertainty of the Calibration standards used, combined with the uncertainty of the measurement process using the RSS method with a k=2 for an approximate 95% level of confidence. The calibration process meets or exceeds a ratio of 4:1 unless otherwise stated.
All tolerances were derived from the applicable standards and pass/fail determination is based on those tolerances. The customer determined any recommended due dates indicated on the certificate.

This report shall not be reproduced except in full, without written approval from Cal-Cert.

Service Engineer: Brent Enbysk **Date:** August 9, 2023

Technical Manager: Marshall Doyle **Signature:** MDoyle

Copyright 2013 Cal-Cert. All rights reserved.

DICK MUNNS COMPANY
LIQUID & GAS FLOW CALIBRATION

ISO 17025:2017
ACCREDITED LABORATORY
Cert# CL-122

IAS ACCREDITED Calibration Laboratory

CERTIFICATE OF CALIBRATION

CUSTOMER:	**PFS-TECO :** CLACKAMAS, OR	**CALIBRATION DATE:**	05/23/2023
PO NUMBER:	1097	**CALIBRATION DUE:**	05/23/2024
INST. MANUFACTURER:	DWYER	**PROCEDURE:**	T.O.33K6-4-1769-1
INST. DESCRIPTION:	VELOMETER	**CALIBRATION FLUID:**	AIR @ 14.7 PSIA 70°F
MODEL NUMBER:	471	**RECEIVED CONDITION:**	WITHIN MFG. SPECS.
SERIAL NUMBER:	CP288559 ID# 095	**LEFT CONDITION:**	WITHIN MFG. SPECS.
RATED ACCURACY:	SEE NOTES BELOW.	**AMBIENT CONDITIONS:**	763mm HGA 53% RH 71°F
UNCERTAINTY GIVEN:	± 0.43% RD ; k=2	**CERTIFICATE FILE #:**	490265.2023

NOTES: ± 3.0% FS (0-500 / 0-1500) ** ± 4.0% F.S. (0-5000) **± 5.0% F.S. (0-15000) ** ± 2 °F

Q.MANUAL IM 2.0 REV 2020.2 DATED 7-27-2020

DECISION RULE: SIMPLE ACCEPTANCE. MEASUREMENT UNCERTAINTIES NOT TAKEN INTO CONSIDERATION WHEN DETERMINING PASS/FAIL

UUT INDICATED FT/MIN	DM.STD. ACTUAL FT/MIN	UUT INDICATED DEG. F	DM STD. ACTUAL DEG. F
74	77	0 TO 200°F	0 TO 200°F
118	121	45.0	44.5
253	259	73.9	73.2
491	502	100.3	99.8
515	525		
1028	1049		
1492	1526		
502	514		
3145	3224		
4993	5135		
6892	7061		
14821	15229		

STANDARDS USED:		
A310: TEMP. STANDARD | ± 0.024 F | TRACE# 1649766843	DUE	02/09/2024
A800: FLOW-DYNE SONIC NOZZLE SYSTEM | 0 – 1086 CFM ± 0.46% RD. | TRACE# 144613547, 1424683640, 1583314714	DUE	12/10/2023

All instruments used in the performance of the shown calibration have traceability to the National Institute of Standards and Technology (NIST). The uncertainty ratio between the calibration standards (DM.STD.) and the Unit Under Test (UUT) is a minimum of 4:1, unless otherwise noted. Calibration has been performed according to the shown procedure. The use of IAS/ILAC logo indicates calibrations are in accordance to ISO/IEC 17025:2017.

Dick Munns Company · 11133 Winners Circle, Los Alamitos, CA 90720
Phone: 714-827-1215 · www.dickmunns.com

This Calibration Certificate shall not be reproduced except, in full, without approval by Dick Munns Company. The data shown applies only to the instrument being calibrated and under the stated conditions of calibration.

Issuing Date: 5-23-2023

Approved By:

Cal. Technician: DC

Calibrated at: ✓ Lab
___ On-Site (Customer's)

Certificate of Calibration

Certificate Number: 743892

JJ Calibrations, Inc.
7724 SE Aspen Summit Drive
Portland, OR 97266-9217
Phone 503.786.3005
FAX 503.786.2994

PFS TECO
11785 SE Hwy 212
Suite 305
Clackamas, OR 97015

ACCREDITED 0723.01 Calibration

PO: 1033
Order Date: 03/08/2021
Authorized By: N/A

Property #: 097
User: N/A
Department: N/A
Make: Unknown
Model: 10 Lbs.
Serial #: 097
Description: Mass
Procedure: DCN 500901
Accuracy: Raw Data

Calibrated on: 03/18/2021
*Recommended Due: 03/18/2026
Environment: 19 °C 41 % RH
* As Received: Other - See Remarks
* As Returned: Other - See Remarks
Action Taken: Calibrated
Technician: 126

Remarks: * Many factors may cause the unit to drift out of calibration before the recommended due date. Any reported error is the absolute value between the reference and the unit. Uncertainties include the effects of the unit.

Data is provided for your determination of acceptability. Received/returned without accessories.

Standards Used

Std ID	Manufacturer	Model	Nomenclature	Due Date	Trace ID
484A	Rice Lake	1kg-10kg (Class ASTM 1)	Mass Set,	05/28/2021	699197
503A	Rice Lake	1mg-200g (Class 0)	Mass Set,	09/11/2021	729241
550A	And (A&D) Co.	HP-30K	Balance 30 Kg	12/31/2021	739307
723A	Rice Lake	1mg-200g (Class 0)	Mass Set,	06/09/2021	723431

Measurement Data

Parameter / Measurement Description	Range	Unit	Reference	Min	Max	*Error	UUT	Uncertainty
Before/After								Accredited = ü
Mass								
Raw Data		g	4535.92370000	0.0000000	0.0000000	0.1785299	4536.1022299 g	3.5E-01 ü

This instrument has been calibrated in accordance with the JJ Calibrations Quality Assurance Manual and is traceable to either the SI or to National Institute of Standards and Technology (NIST). The quality system and this certificate are in compliance with ANSI/NCSL Z540-1-1994, ISO/IEC 17025-2017, ISO 10012-1, the ISO 9000 family and QS 9000. The expanded uncertainties of measurements for this calibration are based upon 95% (2 sigma) confidence limits. Unless stated in the comments, certificates reflect the "Simple Acceptance Rule" as specified by JCGM 106:2012. Unless otherwise stated, a test accuracy ratio (TAR) of 4:1, if achievable, is maintained. The results reported herein apply only to the calibration of the item described above. This report may not be reproduced, except in full, without written approval of JJ Calibrations.

Reviewer

3 Issued 03/25/2021 Rev # 15

Maggie Moore
Inspector

Report and Certificate of Calibration

CAL-CERT CALIBRATION CERTIFICATION

www.Cal-Cert.com

Toll Free 800-356-4662

Address 5777 SE International Way Milwaukie, OR 97222

Local 503-654-9620

ACCREDITED CERT #4986.01

Report #:	31538-218157-14	**Customer PO#:**	
Customer Name:	PFS TECO		
Customer Address:	11785 SE Highway 212, Suite 305		
City:	Clackamas	**State:** OR	**Zip:** 97015
Contact:	Aaron Kravitz		
Service Address:	11785 SE Highway 212, Suite 305	Clackamas, OR 97015	

Calibration Standards

10-00209 | Weight | Rice Lake | SN: 43334 | Cal: 02/02/2022 | Due: 02/28/2024 | Vendor: Oregon Dept of Ag | Report #: 20220092
19-00269 | Thermo-Hygrometer | Comark | SN: 6237360167 | Cal: 08/14/2023 | Due: 08/31/2024 | Vendor: Cal-Cert | Range: 122 °F 95 %RH | Report #: 30530-30694-3646

Instrument Data

Calibration Date:	October 12, 2023	**Reference:**	ASTM E898-20, D4753-15
Calibration Due Date:	April 12, 2024	**Cal-Cert Procedure:**	CP-002
Calibration Frequency:	6 Months	**Indicating System:**	Digital
Manufacturer:	Sartorius	**Temperature:**	73 °F
Model Number:	ENTRIS224	**Humidity:**	52% RH
Type:	Digital Balance	**Asset #:**	107
Serial #:	34307497	**Service Location:**	Service Address
Scale Capacity:	200 grams	**As Found:**	PASS
		As Left:	PASS

Scale Linear Test

Instrument Range: 200.0000 grams **Resolution:** 0.0001 grams

Calibration Standard grams	As Found UUT grams	As Found Error grams	As Left UUT grams	As Left Error grams	As Left % of Error	Tolerance (As Left) Allowable Error		
						Error	Condition	Expanded Unc. (grams)
0.0000	0.0000	0.0000	0.0000	0.0000	0.00	0.0000	PASS	0.00000
20.0000	19.9998	-0.0002	19.9998	-0.0002	0.00	0.0200	PASS	0.00463
40.0000	39.9997	-0.0003	40.0000	0.0000	0.00	0.0400	PASS	0.00924
60.0000	59.9996	-0.0004	60.0001	0.0001	0.00	0.0600	PASS	0.01386
80.0000	79.9995	-0.0005	80.0001	0.0001	0.00	0.0800	PASS	0.01848
100.0000	99.9994	-0.0006	99.9999	-0.0001	0.00	0.1000	PASS	0.02310
120.0000	119.9993	-0.0007	119.9999	-0.0001	0.00	0.1200	PASS	0.02771
140.0000	139.9991	-0.0009	140.0000	0.0000	0.00	0.1400	PASS	0.03233
160.0000	159.9990	-0.0010	160.0001	0.0001	0.00	0.1600	PASS	0.03695
180.0000	179.9990	-0.0010	180.0000	0.0000	0.00	0.1800	PASS	0.03926
200.0000	199.9989	-0.0011	200.0000	0.0000	0.00	0.2000	PASS	0.04619
100.0000	99.9994	-0.0006	99.9999	-0.0001	0.00	0.1000	PASS	0.02310
0.0000	0.0000	0.0000	0.0000	0.0000	0.00	0.0000	PASS	0.00000

Copyright 2013 Cal-Cert. All rights reserved.

Manufacturer: Sartorius **Type:** Digital Balance **Serial #:** 34307497

FUNCTIONAL CHECKS					
ECCENTRIC LOAD TEST:		**HYSTERESIS: Load Increments**		**REPEATABILITY:**	
Loading position	100.0000	Test Weight Applied. % of load	Readings	Test Weight Applied	100.0000
Right	99.9999	0%	0.0000	1st	99.9999
Left	99.9998	(R1) 50%	99.9999	2nd	100.0000
Front	99.9998	100%	200.0000	3rd	99.9999
Back	99.9999	(R2)50%	99.9999	4th	100.0000
Center	99.9999	0%	0.0000	5th	100.0000
As Left	PASS	As Left	PASS	As Left	PASS
Tolerance: The maximum error of the eccentric loading must be less than .1% of center load value.		Tolerance: The Difference of R1 and R2 must be within 0.1%		Tolerance: Deviation of lowest and highest reading within 0.1%	

Remarks:

The scale was adjusted prior to taking the As Left readings.

We sincerely thank you for your business. Please call us at 503-654-9620 for all your sales and calibration needs.
Cleaning and preventative maintenance were performed as part of this service.

Cal-Cert is accredited by A2LA under Calibration Laboratory Code #4986.01.
A2LA is recognized under the ILAC mutual recognition agreement (MRA).

This certificate is hereby issued that the above instrument was tested for accuracy with calibrated standards traceable to the National Institute of Standards and Technology (NIST). The information provided on this form complies with the data gathering and reporting requirements of ISO/IEC 17025 and ANSI/NCSL Z540.1, and meets the requirements of all applicable references and Cal-Cert procedures listed above.
Any stated measurement uncertainty includes the uncertainty of the Calibration standards used, combined with the uncertainty of the measurement process using the RSS method with a k=2 for an approximate 95% level of confidence. The calibration process meets or exceeds a ratio of 4:1 unless otherwise stated. All tolerances were derived from the applicable standards and pass/fail determination is based on those tolerances. The customer determined any recommended due dates indicated on the certificate.

This report shall not be reproduced except in full, without written approval from Cal-Cert.

Service Engineer: Jon Rau **Date:** October 12, 2023

Technical Manager: Marshall Doyle **Signature:** MDoyle

REPORT#: 31538-218157-14

Copyright 2013 Cal-Cert. All rights reserved.

Established 1974

QUALITY CONTROL SERVICES

LABORATORY EQUIPMENT • SALES • SERVICE • CALIBRATION • REPAIRS
2340 SE 11TH Ave. Portland, Oregon 97214 • Box 14831 Portland, Oregon 97293
(503) 236-2712 • FAX (503) 235-2535 • www.qc-services.com

ACCREDITED
CERTIFICATE #1550.01

Report of Calibration

Firm: PFS-TECO
Address: 11785 SE Hwy 212, Ste 305
City/State/Zip: Clackamas, OR 97015

Test Completed: 05/09/22
Purchase Order: 1067
Traceable Number: 20220682

Test Item: 200 mg and 100 mg Individual Weights
Serial No.: Listed in Table

Manufacturer: Troemner
Customer ID: Listed in Table

Material	Assumed Density	Range	Tolerance Class
Stainless Steel	7.95 g/cm^3	200 mg & 100 mg	ASTM Class 1

Method and Traceability
The procedure used for this calibration is NIST IR 6969 SOP 4 Double Substitution Weighing Design. Standards used for comparison are traceable to the National Institute of Standards and Technology (reports on file) and are part of a comprehensive measurement assurance program for ensuring continued accuracy and traceability within the level of uncertainty reported. The Traceable Number listed above is Traceable to National Standards through an unbroken chain of comparison each having stated uncertainties.

Standards Used:
100 g to 1 mg Working Standards Were Calibrated: 07/02/21 Due: 07/31/22 Standards ID: 723318
Mass Comparators Used: MET-05 **Tested by:** D. Thompson

Conventional Mass: "The conventional value of the result of weighing a body in air is equal to the mass of a standard, of conventionally chosen density, at a conventionally chosen temperature, which balances this body at this reference temperature in air of conventionally chosen density. International Recommendation 33 (OIML IR 33 1973, 1979). "Conventional Value of the Result of Weighing in Air" **(Previously known as "Apparent Mass vs. 8.0 g/cm^3).**

Uncertainty Statement: The uncertainty conforms to the ISO Guide to the Expressions of Uncertainty in Measurement. Uncertainty as reported is based on a coverage factor k=2 for an approximate 95 percent level of uncertainty. Uncertainty components include the standard deviation of the process, the uncertainty of the standard used, an uncertainty component associated with the potential drift of the standard used, and the estimated uncertainty related to measuring and determining the air buoyancy effect.

Conventional Mass Values are listed on page 2 of this report.

Quality Control Services, Inc.
Metrology Laboratory Manager
E-mail dthompson@qc-services.com

Date: 05/09/22

Signature David S. Thompson

This document shall not be reproduced, except in full, without the written approval of Quality Control Services Mass Laboratory.

Member: National Conference of Standards Laboratories and Weights & Measures

Established 1974

QUALITY CONTROL SERVICES

LABORATORY EQUIPMENT • SALES • SERVICE • CALIBRATION • REPAIRS
2340 SE 11TH Ave. Portland, Oregon 97214 • Box 14831 Portland, Oregon 97293
(503) 236-2712 • FAX (503) 235-2535 • www.qc-services.com

ACCREDITED
CERTIFICATE #1550.01

Report of Calibration

Firm: PFS-TECO
Address: 11785 SE Hwy 212, Ste 305
City/State/Zip: Clackamas, OR 97015

Test Completed: 05/09/22
Purchase Order: 1067
Traceable Number: 20220682

Test Item: 200 mg and 100 mg Individual Weights
Serial No.: Listed in Table

Manufacturer: Troemner
Customer ID: Listed in Table

Laboratory Environment at time of test

Temperature °C	Pressure mmHg	Humidity %RH
21.93 to 21.94	760.7 to 760.8	47.8 to 47.9

Conventional Mass Value

Nominal Value	As Found Value (g)	As Found Correction* (mg)	As Left Value (g)	As Left Correction* (mg)	Uncertainty (mg)	Tolerance (mg)
200 mg, 1000101395, #109-B	0.2000082	0.0082	0.2000082	0.0082	0.0014	0.010
100 mg, 1000126267, #109-A	0.1000065	0.0065	0.1000065	0.0065	0.0014	0.010

*Correction is the difference between the conventional mass value of a weight and its nominal value.

Comments: These weights were received in good condition and were within ASTM Class 1 tolerances As Found.

Recalibration Due: The customer has requested a 5-year calibration cycle. The calibration due date for these weights is 05/09/27. The values listed above were found at the time of calibration. Any number of factors may cause these items to drift out of calibration before the calibration interval has expired.

Accredited by the American Association for Laboratory Accreditation (A2LA) under Calibration Laboratory Code 115953 and Certificate Number 1550.01. This laboratory meets the requirements of ISO/IEC 17025:2017 *General Requirements for the Competence of Testing and Calibration Laboratories.* This laboratory also meets the requirements of ANSI/NCSL Z540-1-1994 and any additional program requirements in the field of calibration.

Quality Control Services, Inc.
Metrology Laboratory Manager
E-mail dthompson@qc-services.com

Date: 05/09/22

Signature David S. Thompson

This document shall not be reproduced, except in full, without the written approval of Quality Control Services Mass Laboratory.

Member: National Conference of Standards Laboratories and Weights & Measures

Model 1430 Microtector® Portable Electronic Point Gage

Accurate To ±.00025"w.c., Battery Operated, Self-Contained

Fast, accurate pressure measurements at moderate cost. Combines modern, solid state integrated circuit electronics with the timeproven point gage manometer. Delivers repeatable accuracy in measuring positive, negative or differential pressures to ±.00025" water column over a 0 to 2" w.c. range. Metric model M-1430 reads from 0-50 mm w.c.

Calibrates other instruments. Provides high precision for test laboratories of manufacturers of fans, air conditioning and heating equipment, pneumatic or fluidic controls, etc. Used in college, university and consultant laboratories – wherever precision measurements are required. Used with pitot tube (at extra cost) for precision measurement of low air velocities.

Measures positive, negative or differential pressures to 2.0" w.c.

Easy to maintain and clean. Battery replacement and instrument cleaning are quick and simple-use mild soap and water. Indicating fluid consists of distilled water and a small amount of Dwyer A-126 Fluorescein green color concentrate. Max. press. 100 psig (6.89 bar).

*Patent No 3,726,142

Microtector® gage kit includes everything needed:

Microtector® Gage* – A Durablock® solid, precision machined acrylic plastic body, mounted on heavy, 1/2" thick steel base. 3-point base mounting has two leveling screws and level vial for quick setup.

Gage Meter – Sensitive 0-50 microamp D.C. meter acts as detector. Powered by 1-1/2 volt penlight cell (included). No external power needed. Meter also indicates battery and hook probe condition.

Electronic Circuitry – Solid state integrated circuit electronic components are mounted on glass epoxy board enclosed in a molded styrene acrylonitrile compartment for protection. A.C. Detector current eliminates hook plating.

Micrometer – Adjusts point with precision. Complies with Federal Specification GGG-C-105C and is traceable to a master at the NIST.

Dwyer® Gage Fluid – 3/4″ oz non-toxic concentrate of fluorescein green color, wetting agent and distilled water. Use with distilled water.

Accessories – Two 3-foot lengths of tygon tubing, two 1/8" pipe thread adapters, micrometer wrench and crocus cloth for cleaning point.

Carrying Case-Cover – Rugged sheet steel, gray finish. Carrying handle and latches. Complete instructions included.

MODELS

Model Number	Range
1430	0-2 in. w.c.
M1430	0-50 mm w.c.

J-2000

owner's manual

DELMHORST®
INSTRUMENT CO.

WHEN ACCURACY IS THE POINT.™

TABLE OF CONTENTS

2 J-2000 Features

3 Before You Begin

3 Check Calibration

4 Set Species

5 Species Code Chart

6 Set Temperature

7 Set Pin Calibration

7 Taking a Reading

8 Information About Your Readings

8 To Check Accumulated Readings

8 To Reset Meter

9 Care of Your Meter

10 Service For Your Meter

11 Warranty

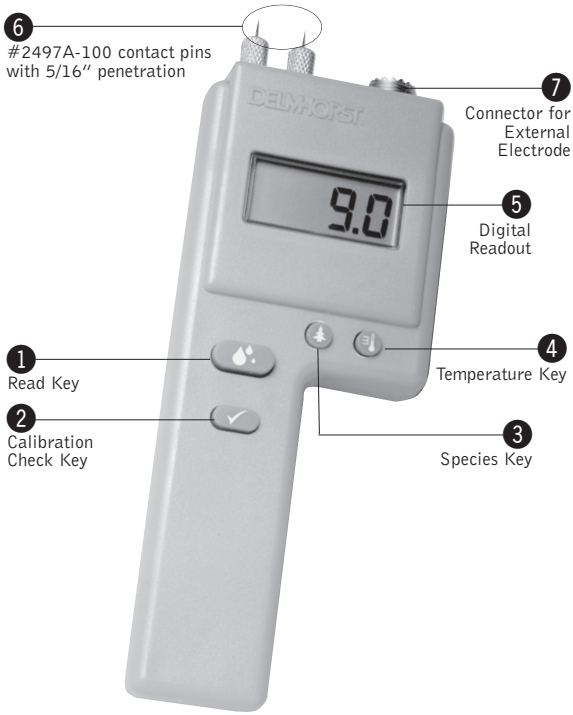

J-2000 FEATURES

- Resistance technology recognized worldwide as the most accurate method for measuring wood MC
- 6% to 40% MC wood (Douglas Fir ref)
- 6% to 60% MC wood (J-2000/X)
- Averages up to 100 accumulated readings
- User-selectable corrections for 48 species
- Built-in temperature compensation (F/C)
- Proven microcontroller circuit
- Easy one-hand operation
- Includes (1) 9-Volt Battery
- Includes sturdy carrying case
- One-year warranty

BEFORE YOU BEGIN

Key Functions

❶ READ KEY - Press to read the %MC.

❷ CALIBRATION CHECK KEY - This key, (when pressed with the read key) checks the meter calibration. It also displays the number of readings in memory (up to 100), the average, and the highest stored reading. It also clears the memory.

❸ SPECIES KEY - Press to select the species code for the wood you are testing. Species are numbered from 1 to 48 and are listed on the Species Code Chart on page 5. To scroll forward through the species codes keep the species key pressed. To scroll backward press the species key, release it and immediately press the temperature key.

❹ TEMPERATURE KEY - Press to set the wood temperature. Press and immediately press the Calibration Check the temperature key ❷ to toggle between (F and C). To increase the temperature setting keep the temperature key pressed. To decrease the temperature, press the temperature key, release it and immediately press the species key.

CHECK CALIBRATION ✓

Press the calibration check key ❷ and read key ❶ simultaneously. Meter is in calibration if it displays 12% (+ or - 0.2).

If you check the calibration and the meter does not display 12% it is likely an indication of a low battery. If this occurs, replace the battery immediately with a new EverReady or Duracell brand 9V. Continued use with a low battery may cause the meter to go out of calibration. If you have a fresh battery and the instrument still does not indicate a proper calibration, return it to DELMHORST for service. See **Service for your Meter** section.

When the battery is removed and then reconnected, the meter displays its software version for one second and then turns itself off. After replacing the battery, you must reset the meter as described in **Resetting the Meter** section.

A hard Reset is required if, after changing the battery, the display is frozen. This is sometimes caused by the interruption of contact between the battery and battery lead wire. Resolve this as follows: Disconnect the battery. Press and hold the Read key for 15 seconds. Release the Read key. Press and hold the Check key for 15 seconds. Release the Check key. Connect a fresh battery to the lead wire in a single action, making sure to align the poles properly and without interrupting contact. If the display remains frozen, repeat the procedure. If this procedure does not solve the problem, refer to the Service for Your Meter section.

Meter Default Settings

Species - Douglas Fir
Temperature - 70ºF
Pin/Electrode - 4-pin (non-insulated)
Each of these parameters is programmed into the meter and is user-selectable. Proper setting of each will insure the most accurate readings.

SET SPECIES

The J-2000 defaults to Species Code #1 - Douglas Fir - the USDA standard and basis for all Delmhorst calibrations. Because the electrical characteristics of different species vary, all species read differently at the same moisture content. For this reason you need to adjust for species. If you are working with a species other than Douglas Fir, set the species code using the species key 3, and the meter will make the necessary corrections.

▶ **To change species** press the species key 3. The meter will display the current species code for one second. Refer to the Species Code Chart on page 5. Call our customer service team at 877-DELMHORST (335-6467) or e-mail info@delmhorst.com for assistance with any species or wood-based material that is not included in the chart. It is always helpful if you have the scientific name as well as any common names for the species.

▶ **To scroll forward** through the species list hold the species key ❸ while the current species code is displayed and scroll to the species number desired.

▶ **To scroll backward** through the species list, press and release the species key ❸. Within one second, press and hold the temperature key ❹. Continue to hold the temperature button ❹ and the species number will decrease.

▶ **When scrolling in either direction**, release the key to stop at your desired species.

Species Code Chart

CODE / SPECIES		CODE / SPECIES	
1	Fir, Douglas	25	Magnolia
2	Pine, Southern	26	Mahogany, African (also Khaya)
3	SPF	27	Mahogany, Honduras
4	Alder	28	Mahogany, Philippine
5	Apitong	29	Maple, Hard/Soft
6	Aspen	30	Meranti, Dark Red
7	Ash, White	31	Oak, Red
8	Basswood	32	Oak, White
9	Birch	33	Pecan
10	Cedar, Eastern Red	34	Pine, Longleaf
11	Cedar, Incense	35	Pine, Ponderosa
12	Cherry	36	Pine, Shortleaf
13	Cottonwood	37	Pine, Sugar
14	Cypress	38	Pine, White
15	Elm, American	39	Poplar, Yellow
16	Fir, Red	40	Ramin
17	Fir, White	41	Radiata Pine
18	Gum, Black	42	Redwood
19	Gum, Red	43	Spruce, Sitka
20	Hemlock, Western	44	SPF, COFI*
21	Hackberry	45	Teak
22	Hickory	46	Virola
23	Keruing	47	Walnut, Black
24	Larch	48	Western Hemlock - COFI*

*Species and temperature correction data for both Western Hemlock-COFI (code #48) and SPF-COFI (code #44) were developed by COFI.

When comparing readings between the model RDM-2/COFI or the RDM-2S/COFI, used with type 26-E electrode with insulated pins, and the J-2000, be sure both meters are set to 2-pin electrode (insulated pins).

SET TEMPERATURE

The J-2000 defaults to a temperature of 70ºF. As wood temperature increases, its electrical resistance decreases and indicated moisture content rises. Lower wood temperatures result in lower indicated moisture content. A correction is necessary if the wood temperature is outside the range of 50ºF (10ºC) to 90ºF (32ºC). Set the temperature accordingly and the meter will make the correction.

- ▶ **To change temperature** press and release the temperature key 4. The meter will display the current temperature for one second.
- ▶ **To scroll forward** through the temperature settings, press and hold the temperature key 4 while the current temperature is displayed.
- ▶ **To scroll backward** press and release the temperature key 4. Within one second, press and hold the species key 3. Continue to hold the species key 3 and the temperature will decrease.
- ▶ **When scrolling in either direction**, release the button to stop at the desired temperature.

Set Temperature Mode

- ▶ **To change between Fahrenheit and Celsius modes** press the temperature key 4.
- ▶ **Press the calibration check key** 2 within one second and release when you are in the desired mode.
- ▶ **The meter will display the current temperature setting** in the new mode and will wait one more second until shutting off so that you may change the temperature value as described above.

If the meter is in Fahrenheit mode, the letter "F" will display in the left-hand corner. If it is in Celsius mode, no letter will appear in the display.

In the Fahrenheit mode, the temperature will change in increments of 5ºF. In Celsius, the temperature will change in increments of either 2ºC or 3ºC depending on its conversion from Fahrenheit.

In the Fahrenheit mode, the temperature value will display in whole numbers. In the Celsius mode, positive values will display in whole numbers; negative values will display with a decimal point and a "minus" sign in the left-hand corner. (i.e.: -17.0)

SET PIN CALIBRATION

The basic factory calibration of the J-2000 is for use with non-insulated pins. Insulated pins read lower than non-insulated ones. The difference is small below 10% MC but increases as the moisture content increases above 10%. When using an electrode with insulated pins, such as the 26-ES hammer electrode, you can change the calibration to compensate for this difference.

- **To change the pin setting**, press and release the species key 3, then press the calibration check key 2 within one second.
- **The meter will display** the current pin calibration as either 222 for insulated or 444 for non-insulated pins.
- **If you continue to hold the calibration check key 2**, the meter will toggle between 222 and 444.

TAKING A READING

- **Remove the protective cover** to expose the pins. Check that the contact pins 6 are firmly hand tightened.
- **To take a reading**, align the contact pins 6 parallel to the grain and push them to their full penetration into the wood, if possible. Insulated pins read only at the tip and can be driven to the desired depth.
- **Press the read key 1** and read the moisture content on the meter scale. The meter displays the %MC for two seconds.
- **To add a reading** to the sum of all the previously stored readings, release the read key 1 within 2 seconds.

The non-insulated contact pins on the top of the meter penetrate max 5/16in. and may be used on wood up to 1-1/2 to 2in. thick. Push the pins into the wood to their full penetration for best accuracy. For thicker wood and hardwoods over 4/4, use the 26-ES hammer electrode with insulated pins. These pins (no. 496), may be used on wood up to 5-6in. thick. Connect the electrode to the input connector on the top of the meter 7. Contact our customer service team for more information on other available pins for your application.

Insulated pins offer the advantage of taking measurements at various depths since the reading is made at the point in the wood where only the non-insulated tips of the pins make contact. This is especially useful when drying lumber since reliable shell and core readings are essential to producing high quality lumber.

See the FAQ section of our website for helpful application info. www.delmhorst.com

INFORMATION ABOUT YOUR READINGS

Readings below 6% will be displayed as a numeric value, (-##.#), but will not be added to the accumulated readings in memory. Readings below 6% due to temperature and species adjustments will be shown as a numeric value with no minus sign. These readings will be added to the accumulated total in memory and included in the statistical calculations.

Readings above 40% are always displayed as 999 and are not added to the memory.

The meter will accumulate up to 100 readings. After all 100 readings are stored it will not add new readings until the memory has been cleared. It will also continue to display the average of all 100 readings as a reminder that the memory is full.

When taking and storing readings for a specific wood species, be sure to clear the meter's memory before moving on to the next species if you do not want to group all of the readings together.

TO CHECK ACCUMULATED READINGS

This feature allows you to view the total number of all accumulated readings, the average of those readings, and the highest stored reading.

- ▶ **To view the readings** press and release the calibration check key 2. The meter displays the number of accumulated readings for one second, then the average of those readings for two seconds. Then it displays the highest stored reading for two seconds. The total cycle time is five seconds.
- ▶ **To clear the memory** press and hold the calibration check key 2 down for 5 seconds. All accumulated readings will be erased and the meter will display "0".

TO RESET METER

- ▶ **Press and release** the calibration check key 2.
- ▶ **Within one second** press the species key 3.
- ▶ **The meter will reset itself** and display "170" to indicate the meter is reset to default: Species #1 (Douglas Fir) at 70ºF, followed by 444 (pin setting). All of the readings in memory will be cleared.

CARE OF YOUR METER

To keep your meter in good working order:

- ▶ Store your meter in a clean, dry place. The protective carrying case provided is an ideal storage place when the meter is not in use.
- ▶ Change the 9-Volt battery as needed. Use only EverReady or Duracell brand batteries. Continued use with a low battery may cause the meter to go out of calibration.
- ▶ Change contact pins as needed. Keep contact pins hand tightened.
- ▶ Clean the meter and contact pins with any biodegradable cleaner. Use the cleaner sparingly and on external parts only. Keep cleaner out of the external connector 7.
- ▶ Remove the battery if the meter will not be used for one month or longer.

SERVICE FOR YOUR METER

If your meter is not working properly, replace the battery with a new one and check the calibration. If this does not resolve the problem please send your meter back to Delmhorst for repair.
Go to HYPERLINK "http://www.delmhorst.com" www.delmhorst.com and click on Support and then download the Return Form.
If you require further assistance please call 877-DELMHORST (335-6467) or 973-334-2557.
E-mail HYPERLINK "mailto:info@delmhorst.com" info@delmhorst.com

WARRANTY

Delmhorst Instrument Co., referred to hereafter as Delmhorst, guarantees its J-2000 meter for one year from date of purchase and any optional electrodes against defects in material or workmanship for 90 days. If, within the warranty period, you find any defect in material or workmanship return the meter following the instructions in the **Service for Your Meter** section. This limited warranty does not cover abuse, alteration, misuse, damage during shipment, improper service, unauthorized or unreasonable use of the meter or electrodes. This warranty does not cover batteries or contact pins. If the meter or any optional electrodes have been tampered with, the warranty shall be void. At our option we may replace or repair the meter.

Delmhorst shall not be liable for incidental or consequential damages for the breach of any express or implied warranty with respect to this product or its calibration. With proper care and maintenance the meter should stay in calibration; follow the instructions in the **Care of Your Meter** section.

UNDER NO CIRCUMSTANCES SHALL DELMHORST BE LIABLE FOR ANY INCIDENTAL, INDIRECT, SPECIAL, OR CONSEQUENTIAL DAMAGES OF ANY TYPE WHATSOEVER, INCLUDING, BUT NOT LIMITED TO, LOST PROFITS OR DOWNTIME ARISING OUT OF OR RELATED IN ANY RESPECT TO ITS METERS OR ELECTRODES AND NO OTHER WARRANTY, WRITTEN, ORAL OR IMPLIED APPLIES. DELMHORST SHALL IN NO EVENT BE LIABLE FOR ANY BREACH OF WARRANTY OR DEFECT IN THIS PRODUCT THAT EXCEEDS THE AMOUNT OF PURCHASE OF THIS PRODUCT.

The express warranty set forth above constitutes the entire warranty with respect to Delmhorst meters and electrodes and no other warranty, written, oral, or implied applies. This warranty is personal to the customer purchasing the product and is not transferable.

NOTES

For more than 65 years Delmhorst Instrument has been the leading manufacturer of high quality, US-made moisture meters and thermo-hygrometers. Today we offer a wide range of meters for applications including water damage restoration, construction, flooring, lumber/woodworking, paper, and agriculture.

DELMHORST® INSTRUMENT CO.

WHEN ACCURACY IS THE POINT.™

51 Indian Lane East
Towaco, NJ 07082

(877)-DELMHORST
www.delmhorst.com
info@delmhorst.com

©2006, Delmhorst Instrument Co.

510INS-0003 REV. 01/15

Established 1974

QUALITY CONTROL SERVICES

LABORATORY EQUIPMENT • SALES • SERVICE • CALIBRATION • REPAIRS
2340 SE 11TH Ave. Portland, Oregon 97214 • Box 14831 Portland, Oregon 97293
(503) 236-2712 • FAX (503) 235-2535 • www.qc-services.com

ACCREDITED
CERTIFICATE #1550.01

PFS Teco
11785 SE Hwy 212 STE#305
Clackamas, OR 97015

Report Number: DIRI01C101887027231228

A2LA ACCREDITED
CERTIFICATE OF CALIBRATION WITH DATA

INSTRUMENT INFORMATION

Item	Make	Model	Serial Number	Customer ID	Location
Scale	Mettler	IND570 - 1000lbx0.	C101887027	#189	Lab
Units	**Readability**	**SOP**	**Cal Date**	**Last Cal Date**	**Cal Due Date**
lbs	0.02	QC033	12/28/23	12/14/22	12/2024

FUNCTIONAL CHECKS

SHIFT TEST	LINEARITY	REPEATABILITY	ENVIRONMENTAL CONDITIONS
Test Wt: 400 / Tol: 0.10	Test Wt: HB44 / Tol: HB44	Test Wt: 200 / Tol: 0.04	☐ Good ☑ Fair ☐ Poor
As-Found: Pass:☑ Fail:☐	As-Found: Pass:☑ Fail:☐	As-Found: Pass:☑ Fail:☐	Temperature: 18.2°C
As-Left: Pass:☑ Fail:☐	As-Left: Pass:☑ Fail:☐	As-Left: Pass:☑ Fail:☐	

CALIBRATION DATA

Standard	As-Found	As-Left	Expanded Uncertainty
1000	999.98	999.98	0.012
600	599.98	599.98	0.011
400	399.96	399.96	0.011
200	200.00	200.00	0.011
100	100.00	100.00	0.011
50	50.00	50.00	0.011

CALIBRATION STANDARDS

Item	Make	Model	Serial Number	Cal Date	Cal Due Date	NIST ID
Avoirdupois Cast W	Rice Lake	25 and 50lb	PWO990-CA	7/18/22	7/2024	20221688

Permanent Information Concerning this Equipment:

Comments/Information Concerning this Calibration

12/23 RH = 40.5%

Report prepared/reviewed by: R.B. **Date:** 12-28-23 **Technician:** R. Butcher

Signature: R. Butcher

THIS CERTIFICATE SHALL NOT BE REPRODUCED, EXCEPT IN FULL, WITHOUT THE APPROVAL OF QUALITY CONTROL SERVICES, INC.

The uncertainty is calculated according to the ISO Guide to the Expression of Uncertainty in Measurement and includes the uncertainty of standards used combined with the observed standard deviation of the unit under test. The uncertainty is expanded with a k factor of 2 for an approximate 95% level of confidence. Instruments listed above were calibrated using standards traceable to the National Institute of Standards and Technology (NIST). Calibration data reflect results at the time and location of calibration. Calibration data should be reviewed to insure that the instrument is performing to its required accuracy. Calibrations comply with ISO/IEC 17025 and ANSI/Z540-1-1994 quality standards.

Member: National Conference of Standards Laboratories and Weights & Measures

PT ID: DIRI01

Report and Certificate of Calibration

CAL-CERT CALIBRATION CERTIFICATION

www.Cal-Cert.com

Toll Free 800-356-4662

Address 5777 SE International Way Milwaukie, OR 97222

Local 503-654-9620

A2LA ACCREDITED CERT #4986.01

Report #: 32102-201251-4686 **Customer PO#:** 1102
Customer Name: PFS TECO
Customer Address: 11785 SE Highway 212, Suite 305
City: Clackamas **State:** OR **Zip:** 97015
Contact: Ethan Frederick
Service Address: 5777 SE International Way Milwaukie, OR 97222

Calibration Standards

10-00954 | Gage Block Set | Shars | SN: 120018 | Cal: 05/26/2023 | Due: 05/26/2025 | Vendor: American Gage | Report #: 109141
LP-00397 | Gage Block Set | Mitutoyo | SN: 509020 | Cal: 12/28/2022 | Due: 12/28/2024 | Vendor: BHD Test and Measurement | Report #: 99826
LP-01757 | Thermo-Hygrometer | Comark | SN: 06257740560 | Cal: 04/28/2023 | Due: 04/28/2024 | Report #: 29096-209333-4201

Instrument Data

Calibration Date:	December 6, 2023	**Reference:**	Manufacturer's Spec
Calibration Due Date:	December 6, 2024	**Cal-Cert Procedure:**	CP-115
Calibration Frequency:	12 Months	**Indicating System:**	Stamped
Manufacturer:	Starrett	**Temperature:**	69 °F
Type:	Tape Measure	**Humidity:**	51% RH
Model Number:	Exact	**Asset #:**	207
Serial #:	138054-2203-00002249	**Service Location:**	Cal-Cert Lab
Capacity:	192.00 Inches	**As Found:**	Pass
		As Left:	Pass

Instrument Range: 192.000 Inches **Range Resolution:** 0.06250 Inches

Calibration Standard	As Found Reading	Verification Reading #1	Verification Reading #2
0.2500	0.2500	0.2500	0.2500
1.0000	1.0000	1.0000	1.0000
6.0000	6.0000	6.0000	6.0000
12.0000	12.0000	12.0000	12.0000
64.0000	64.0000	64.0000	64.0000
128.0000	128.0000	128.0000	128.0000
192.0000	192.0000	192.0000	192.0000

Expanded Uncertainty ± 0.07217 Inches

Remarks:

Metric scale not calibrated.

We sincerely thank you for your business. Please call us at 503-654-9620 for all your sales and calibration needs.
Cleaning and preventative maintenance were performed as part of this service.

Cal-Cert is accredited by A2LA under Calibration Laboratory Code #4986.01.
A2LA is recognized under the ILAC mutual recognition agreement (MRA).

This certificate is hereby issued that the above instrument was tested for accuracy with calibrated standards traceable to the National Institute of Standards and Technology (NIST). The information provided on this form complies with the data gathering and reporting requirements of ISO/IEC 17025 and ANSI/NCSL Z540.1, and meets the requirements of all applicable references and Cal-Cert procedures listed above.
Any stated measurement uncertainty includes the uncertainty of the Calibration standards used, combined with the uncertainty of the measurement process using the RSS method with a k=2 for an approximate 95% level of confidence. The calibration process meets or exceeds a ratio of 4:1 unless otherwise stated.
All tolerances were derived from the applicable standards and pass/fail determination is based on those tolerances. The customer determined any recommended due dates indicated on the certificate.

This report shall not be reproduced except in full, without written approval from Cal-Cert.

Service Engineer: Scott McGuire **Date:** December 6, 2023

Technical Manager: Marshall Doyle **Signature:** MDoyle

Copyright 2013 Cal-Cert. All rights reserved.

Report and Certificate of Calibration

CAL-CERT
CALIBRATION CERTIFICATION

www.Cal-Cert.com

Toll Free	Address	Local
800-356-4662	5777 SE International Way Milwaukie, OR 97222	503-654-9620

A2LA ACCREDITED
CERT #4986.01

Report #: 31621-201253-5 **Customer PO#:** 1102
Customer Name: PFS TECO
Customer Address: 11785 SE Highway 212, Suite 305
City: Clackamas **State:** OR **Zip:** 97015
Contact: Ethan Frederick
Service Address: 5777 SE International Way Milwaukie, OR 97222

Calibration Standards

LP-00397 | Gage Block Set | Mitutoyo | SN: 509020 | Cal: 12/28/2022 | Due: 12/28/2024 | Vendor: BHD Test and Measurement | Report #: 99826
LP-01782 | Thermo-Hygrometer | Comark | SN: 06247790052 | Cal: 01/30/2023 | Due: 01/31/2024 | Range: 122 °F 95 %RH | Report #: 27747-205513-4239

Instrument Data

Calibration Date:	October 23, 2023	**Reference:**	ASME B89.1.14 2018
Calibration Due Date:	October 23, 2024	**Cal-Cert Procedure:**	CP-008
Calibration Frequency:	12 Months	**Indicating System:**	Digital
Manufacturer:	Mitutoyo	**Temperature:**	66 °F
Type:	Digital Caliper	**Humidity:**	51% RH
Model Number:	CD-P6"S	**Asset #:**	208
Serial #:	B22159310	**Service Location:**	Cal-Cert Lab
Capacity:	6 Inches	**As Found:**	PASS
Resolution:	0.0005 Inches	**As Left:**	PASS

Instrument Range: 6.0000 Inches **Range Resolution:** 0.0005 Inches

Outside Jaws / Linearity

Calibration Standard Inches	As Found Inches	As Left Reading 1 Inches	As Left Reading 2 Inches	Tolerance ± Inches
0.0000	0.0000	0.0000	0.0000	0.0000
0.0500	0.0495	0.0495	0.0495	0.0010
0.3000	0.3000	0.3000	0.3000	0.0010
0.6000	0.6000	0.6000	0.6000	0.0010
1.2000	1.1995	1.1995	1.1995	0.0010
2.4000	2.4000	2.4000	2.4000	0.0010
3.5000	3.5000	3.5000	3.5000	0.0010
5.0000	5.0000	5.0000	5.0000	0.0010
6.0000	5.9995	5.9995	5.9995	0.0010

Expanded Uncertainty ± 0.00036 Inches

Scale Shift Verification

	Target	Measured	Tolerance ±
Resolution Check	0.1005	0.10050	N/A
Depth	1.000	1.00000	0.001
Step	1.000	1.00000	0.001
Inside Jaws	1.000	0.99950	0.001

Inspections

Jaws Parallel	Acceptable

Remarks:

We sincerely thank you for your business. Please call us at 503-654-9620 for all your sales and calibration needs.
Cleaning and preventative maintenance were performed as part of this service.

Cal-Cert is accredited by A2LA under Calibration Laboratory Code #4986.01.
A2LA is recognized under the ILAC mutual recognition agreement (MRA).

This certificate is hereby issued that the above instrument was tested for accuracy with calibrated standards traceable to the National Institute of Standards and Technology (NIST). The information provided on this form complies with the data gathering and reporting requirements of ISO/IEC 17025 and ANSI/NCSL Z540.1, and meets the requirements of all applicable references and Cal-Cert procedures listed above.
Any stated measurement uncertainty includes the uncertainty of the Calibration standards used, combined with the uncertainty of the measurement process using the RSS method with a k=2 for an approximate 95% level of confidence. The calibration process meets or exceeds a ratio of 4:1 unless otherwise stated.
All tolerances were derived from the applicable standards and pass/fail determination is based on those tolerances. The customer determined any recommended due dates indicated on the certificate.
This report shall not be reproduced except in full, without written approval from Cal-Cert.

Service Engineer: Cameron Walling **Date:** October 23, 2023

Technical Manager: Marshall Doyle **Signature:** MDoyle

Caliper CF-008-01 **Revision 17** **6/30/2023**

Copyright 2013 Cal-Cert. All rights reserved.

Report and Certificate of Calibration

CAL-CERT CALIBRATION CERTIFICATION

www.Cal-Cert.com

Toll Free 800-356-4662

Address 5777 SE International Way Milwaukie, OR 97222

Local 503-654-9620

ACCREDITED CERT #4986.01

Report #: 28134-206391-14 **Customer PO#:** 1090
Customer Name: PFS TECO
Customer Address: 11785 SE Highway 212 Ste 305
City: Clackamas **State:** OR **Zip:** 97015
Contact: Aaron Kravitz
Service Address: 11785 SE Highway 212 Ste 305 Clackamas, OR 97015

Calibration Standards

19-00269 | Thermo-Hygrometer | Comark | SN: 6237360167 | Cal: 09/14/2022 | Due: 08/31/2023 | Vendor: Cal-Cert | Range: 122 °F 95 %RH | Report #: 25699-30694-3486
19-01135 | Thermocouple Meter | Tegam | SN: T-312250 | Cal: 08/01/2022 | Due: 08/31/2023 | Vendor: Cal-Cert | Range: 2,450 °F | Report #: 25315-30977-3646

Instrument Data

Calibration Date:	February 28, 2023	**Reference:**	NAVAIR 17-20.ST-95
Recommended Due Date:	February 28, 2024	**Cal-Cert Procedure:**	CP-013
Calibration Frequency:	12 Months	**Indicating System:**	Digital
Manufacturer:	National Instruments	**Temperature:**	70 °F
Type:	Data Logger	**Humidity:**	31% RH
Model Number:	NI 9213	**Asset #:**	215 Booth 1
Serial #:	1B182FB	**Service Location:**	Service Address
Resolution:	0.1 °F	**As Found:**	Pass
Capacity:	2500 °F	**As Left:**	Pass
Tolerance:	± 3.0 °F		
Additional Error	± - °F		

Type K Thermocouple
METER FUNCTION

Channel	Calibration Standard	UUT As Found	UUT As Left Reading 1	UUT As Left Reading 2	As Left Error	Expanded Uncertainty±
Tunnel	0.00	0.20	0.20	0.20	0.20	0.346
	500.00	500.30	500.30	500.30	0.30	
	1000.00	1000.40	1000.40	1000.40	0.40	
	1500.00	1500.40	1500.40	1500.40	0.40	
	2000.00	2000.50	2000.50	2000.50	0.50	
	2400.00	2400.70	2400.70	2400.70	0.70	

Type K Thermocouple
METER FUNCTION

Channel	Calibration Standard	UUT As Found	UUT As Left Reading 1	UUT As Left Reading 2	As Left Error	Expanded Uncertainty±
Flue	0.00	0.10	0.10	0.10	0.10	0.346
	500.00	500.30	500.30	500.30	0.30	
	1000.00	1000.30	1000.30	1000.30	0.30	
	1500.00	1500.30	1500.30	1500.30	0.30	
	2000.00	2000.50	2000.50	2000.50	0.50	
	2400.00	2400.60	2400.60	2400.60	0.60	

Copyright 2013 Cal-Cert. All rights reserved.

Manufacturer: National Instruments **Type:** Data Logger **Serial #:** 1B182FB

	Type K Thermocouple METER FUNCTION					
Channel	**Calibration Standard**	**UUT As Found**	**UUT As Left Reading 1**	**UUT As Left Reading 2**	**As Left Error**	**Expanded Uncertainty±**
Filter A	0.00	0.10	0.10	0.10	0.10	0.346
	500.00	500.10	500.10	500.10	0.10	
	1000.00	1000.20	1000.20	1000.20	0.20	
	1500.00	1500.30	1500.30	1500.30	0.30	
	2000.00	2000.30	2000.30	2000.30	0.30	
	2400.00	2400.40	2400.40	2400.40	0.40	

	Type K Thermocouple METER FUNCTION					
Channel	**Calibration Standard**	**UUT As Found**	**UUT As Left Reading 1**	**UUT As Left Reading 2**	**As Left Error**	**Expanded Uncertainty±**
Back	0.00	0.10	0.10	0.10	0.10	0.346
	500.00	500.00	500.00	500.00	0.00	
	1000.00	1000.20	1000.20	1000.20	0.20	
	1500.00	1500.50	1500.50	1500.50	0.50	
	2000.00	2000.60	2000.60	2000.60	0.60	
	2400.00	2400.70	2400.70	2400.70	0.70	

	Type K Thermocouple METER FUNCTION					
Channel	**Calibration Standard**	**UUT As Found**	**UUT As Left Reading 1**	**UUT As Left Reading 2**	**As Left Error**	**Expanded Uncertainty±**
Catgalyst	0.00	-0.30	-0.30	-0.30	-0.30	0.346
	500.00	499.90	499.90	499.90	-0.10	
	1000.00	1000.10	1000.10	1000.10	0.10	
	1500.00	1500.10	1500.10	1500.10	0.10	
	2000.00	2000.10	2000.10	2000.10	0.10	
	2400.00	2400.20	2400.20	2400.20	0.20	

	Type K Thermocouple METER FUNCTION					
Channel	**Calibration Standard**	**UUT As Found**	**UUT As Left Reading 1**	**UUT As Left Reading 2**	**As Left Error**	**Expanded Uncertainty±**
Meter A	0.00	-0.50	-0.50	-0.50	-0.50	0.346
	500.00	499.70	499.70	499.70	-0.30	
	1000.00	999.90	999.90	999.90	-0.10	
	1500.00	1500.00	1500.00	1500.00	0.00	
	2000.00	2000.00	2000.00	2000.00	0.00	
	2400.00	2400.00	2400.00	2400.00	0.00	

Copyright 2013 Cal-Cert. All rights reserved.

Manufacturer: National Instruments **Type:** Data Logger **Serial #:** 1B182FB

	Type K Thermocouple METER FUNCTION					
Channel	**Calibration Standard**	**UUT As Found**	**UUT As Left Reading 1**	**UUT As Left Reading 2**	**As Left Error**	**Expanded Uncertainty±**
Left	0.00	-0.50	-0.50	-0.50	-0.50	0.346
	500.00	499.70	499.70	499.70	-0.30	
	1000.00	999.70	999.70	999.70	-0.30	
	1500.00	1500.00	1500.00	1500.00	0.00	
	2000.00	2000.10	2000.10	2000.10	0.10	
	2400.00	2400.20	2400.20	2400.20	0.20	

	Type K Thermocouple METER FUNCTION					
Channel	**Calibration Standard**	**UUT As Found**	**UUT As Left Reading 1**	**UUT As Left Reading 2**	**As Left Error**	**Expanded Uncertainty±**
Right	0.00	-0.60	-0.60	-0.60	-0.60	0.346
	500.00	499.70	499.70	499.70	-0.30	
	1000.00	999.80	999.80	999.80	-0.20	
	1500.00	1499.80	1499.80	1499.80	-0.20	
	2000.00	1999.90	1999.90	1999.90	-0.10	
	2400.00	2400.00	2400.00	2400.00	0.00	

	Type K Thermocouple METER FUNCTION					
Channel	**Calibration Standard**	**UUT As Found**	**UUT As Left Reading 1**	**UUT As Left Reading 2**	**As Left Error**	**Expanded Uncertainty±**
Filter B	0.00	0.00	0.00	0.00	0.00	0.346
	500.00	500.80	500.80	500.80	0.80	
	1000.00	1000.60	1000.60	1000.60	0.60	
	1500.00	1500.20	1500.20	1500.20	0.20	
	2000.00	2000.00	2000.00	2000.00	0.00	
	2400.00	2399.70	2399.70	2399.70	-0.30	

	Type K Thermocouple METER FUNCTION					
Channel	**Calibration Standard**	**UUT As Found**	**UUT As Left Reading 1**	**UUT As Left Reading 2**	**As Left Error**	**Expanded Uncertainty±**
Top	0.00	-0.80	-0.80	-0.80	-0.80	0.346
	500.00	499.30	499.30	499.30	-0.70	
	1000.00	999.50	999.50	999.50	-0.50	
	1500.00	1499.60	1499.60	1499.60	-0.40	
	2000.00	1999.60	1999.60	1999.60	-0.40	
	2400.00	2399.70	2399.70	2399.70	-0.30	

Copyright 2013 Cal-Cert. All rights reserved.

Manufacturer: National Instruments **Type:** Data Logger **Serial #:** 1B182FB

	Type K Thermocouple METER FUNCTION					
Channel	**Calibration Standard**	**UUT As Found**	**UUT As Left Reading 1**	**UUT As Left Reading 2**	**As Left Error**	**Expanded Uncertainty±**
Bottom	0.00	-1.00	-1.00	-1.00	-1.00	0.346
	500.00	499.20	499.20	499.20	-0.80	
	1000.00	999.50	999.50	999.50	-0.50	
	1500.00	1499.50	1499.50	1499.50	-0.50	
	2000.00	1999.60	1999.60	1999.60	-0.40	
	2400.00	2399.60	2399.60	2399.60	-0.40	

	Type K Thermocouple METER FUNCTION					
Channel	**Calibration Standard**	**UUT As Found**	**UUT As Left Reading 1**	**UUT As Left Reading 2**	**As Left Error**	**Expanded Uncertainty±**
Meter B	0.00	-0.80	-0.80	-0.80	-0.80	0.346
	500.00	499.30	499.30	499.30	-0.70	
	1000.00	999.50	999.50	999.50	-0.50	
	1500.00	1499.50	1499.50	1499.50	-0.50	
	2000.00	1999.60	1999.60	1999.60	-0.40	
	2400.00	2399.50	2399.50	2399.50	-0.50	

	Type K Thermocouple METER FUNCTION					
Channel	**Calibration Standard**	**UUT As Found**	**UUT As Left Reading 1**	**UUT As Left Reading 2**	**As Left Error**	**Expanded Uncertainty±**
Meter C	0.00	-1.20	-1.20	-1.20	-1.20	0.346
	500.00	499.00	499.00	499.00	-1.00	
	1000.00	999.20	999.20	999.20	-0.80	
	1500.00	1499.30	1499.30	1499.30	-0.70	
	2000.00	1999.30	1999.30	1999.30	-0.70	
	2400.00	2399.30	2399.30	2399.30	-0.70	

	Type K Thermocouple METER FUNCTION					
Channel	**Calibration Standard**	**UUT As Found**	**UUT As Left Reading 1**	**UUT As Left Reading 2**	**As Left Error**	**Expanded Uncertainty±**
Filter C	0.00	-1.00	-1.00	-1.00	-1.00	0.346
	500.00	499.20	499.20	499.20	-0.80	
	1000.00	999.40	999.40	999.40	-0.60	
	1500.00	1499.50	1499.50	1499.50	-0.50	
	2000.00	1999.50	1999.50	1999.50	-0.50	
	2400.00	2399.50	2399.50	2399.50	-0.50	

Copyright 2013 Cal-Cert. All rights reserved.

Manufacturer: National Instruments **Type:** Data Logger **Serial #:** 1B182FB

	Type T Thermocouple METER FUNCTION					
Channel	**Calibration Standard**	**UUT As Found**	**UUT As Left Reading 1**	**UUT As Left Reading 2**	**As Left Error**	**Expanded Uncertainty±**
Ambient	0.00	0.00	0.00	0.00	0.00	0.346
	20.00	17.70	17.70	17.70	-2.30	
	40.00	37.80	37.80	37.80	-2.20	
	60.00	57.70	57.70	57.70	-2.30	
	80.00	77.90	77.90	77.90	-2.10	
	100.00	97.90	97.90	97.90	-2.10	

Remarks:

15 Channels tested. Ambient is Type T, tested from 0 to 100 °F per customer request.

We sincerely thank you for your business. Please call us at 503-654-9620 for all your sales and calibration needs.
Cleaning and preventative maintenance were performed as part of this service.

Cal-Cert is accredited by A2LA under Calibration Laboratory Code #4986.01.
A2LA is recognized under the ILAC mutual recognition agreement (MRA).

This certificate is hereby issued that the above instrument was tested for accuracy with calibrated standards traceable to the National Institute of Standards and Technology (NIST). The information provided on this form complies with the data gathering and reporting requirements of ISO/IEC 17025 and ANSI/NCSL Z540.1, and meets the requirements of all applicable references and Cal-Cert procedures listed above.
Any stated measurement uncertainty includes the uncertainty of the Calibration standards used, combined with the uncertainty of the measurement process using the RSS method with a k=2 for an approximate 95% level of confidence. The calibration process meets or exceeds a ratio of 4:1 unless otherwise stated. All tolerances were derived from the applicable standards and pass/fail determination is based on those tolerances. The customer determined any recommended due dates indicated on the certificate.

This report shall not be reproduced except in full, without written approval from Cal-Cert.

Service Engineer: Jon Rau **Date:** February 28, 2023

Technical Manager Marshall Doyle **Signature:** MDoyle

Report #: 28134-206391-14

Copyright 2013 Cal-Cert. All rights reserved.

Report and Certificate of Calibration

CAL-CERT
CALIBRATION CERTIFICATION

www.Cal-Cert.com

Toll Free
800-356-4662

Address
5777 SE International Way
Milwaukie, OR 97222

Local
503-654-9620

ACCREDITED
CERT #4986.01

Report #: 28134-206391-14 **Customer PO#:** 1090
Customer Name: PFS TECO
Customer Address: 11785 SE Highway 212 Ste 305
City: Clackamas **State:** OR **Zip:** 97015
Contact: Aaron Kravitz
Service Address: 11785 SE Highway 212 Ste 305 Clackamas, OR 97015

Calibration Standards

19-00269 | Thermo-Hygrometer | Comark | SN: 6237360167 | Cal: 09/14/2022 | Due: 08/31/2023 | Vendor: Cal-Cert | Range: 122 °F 95 %RH | Report #: 25699-30694-3486
19-01135 | Thermocouple Meter | Tegam | SN: T-312250 | Cal: 08/01/2022 | Due: 08/31/2023 | Vendor: Cal-Cert | Range: 2,450 °F | Report #: 25315-30977-3646

Instrument Data

Calibration Date:	February 28, 2023	**Reference:**	NAVAIR 17-20.ST-95
Recommended Due Date:	February 28, 2024	**Cal-Cert Procedure:**	CP-013
Calibration Frequency:	12 Months	**Indicating System:**	Digital
Manufacturer:	National Instruments	**Temperature:**	72 °F
Type:	Data Logger	**Humidity:**	30% RH
Model Number:	NI 9213	**Asset #:**	215 Booth 1
Serial #:	1B182FB	**Service Location:**	Service Address
Resolution:	0.1 °F	**As Found:**	Pass
Capacity:	2500 °F	**As Left:**	Pass
Tolerance:	± 2.0 °F		
Additional Error	± - °F		

Type K Thermocouple
METER FUNCTION

Channel	Calibration Standard	UUT As Found	UUT As Left Reading 1	UUT As Left Reading 2	As Left Error	Expanded Uncertainty±
Tunnel	0.00	-0.20	-0.20	-0.20	-0.20	0.346
	500.00	499.80	499.80	499.80	-0.20	
	1000.00	1000.00	1000.00	1000.00	0.00	
	1500.00	1500.10	1500.10	1500.10	0.10	
	2000.00	2000.10	2000.10	2000.10	0.10	
	2400.00	2400.10	2400.10	2400.10	0.10	

Type K Thermocouple
METER FUNCTION

Channel	Calibration Standard	UUT As Found	UUT As Left Reading 1	UUT As Left Reading 2	As Left Error	Expanded Uncertainty±
Flue	0.00	-0.40	-0.40	-0.40	-0.40	0.346
	500.00	499.60	499.60	499.60	-0.40	
	1000.00	999.70	999.70	999.70	-0.30	
	1500.00	1499.90	1499.90	1499.90	-0.10	
	2000.00	1999.80	1999.80	1999.80	-0.20	
	2400.00	2400.00	2400.00	2400.00	0.00	

Copyright 2013 Cal-Cert. All rights reserved.

Manufacturer: National Instruments **Type:** Data Logger **Serial #:** 1B182FB

	Type K Thermocouple METER FUNCTION					
Channel	**Calibration Standard**	**UUT As Found**	**UUT As Left Reading 1**	**UUT As Left Reading 2**	**As Left Error**	**Expanded Uncertainty±**
Filter A	0.00	-0.60	-0.60	-0.60	-0.60	0.346
	500.00	499.50	499.50	499.50	-0.50	
	1000.00	999.60	999.60	999.60	-0.40	
	1500.00	1499.70	1499.70	1499.70	-0.30	
	2000.00	1999.80	1999.80	1999.80	-0.20	
	2400.00	2399.80	2399.80	2399.80	-0.20	

	Type K Thermocouple METER FUNCTION					
Channel	**Calibration Standard**	**UUT As Found**	**UUT As Left Reading 1**	**UUT As Left Reading 2**	**As Left Error**	**Expanded Uncertainty±**
Back	0.00	-0.70	-0.70	-0.70	-0.70	0.346
	500.00	499.50	499.50	499.50	-0.50	
	1000.00	999.50	999.50	999.50	-0.50	
	1500.00	1499.60	1499.60	1499.60	-0.40	
	2000.00	1999.70	1999.70	1999.70	-0.30	
	2400.00	2399.60	2399.60	2399.60	-0.40	

	Type K Thermocouple METER FUNCTION					
Channel	**Calibration Standard**	**UUT As Found**	**UUT As Left Reading 1**	**UUT As Left Reading 2**	**As Left Error**	**Expanded Uncertainty±**
Catgalyst	0.00	-0.70	-0.70	-0.70	-0.70	0.346
	500.00	499.40	499.40	499.40	-0.60	
	1000.00	999.60	999.60	999.60	-0.40	
	1500.00	1499.60	1499.60	1499.60	-0.40	
	2000.00	1999.70	1999.70	1999.70	-0.30	
	2400.00	2399.70	2399.70	2399.70	-0.30	

	Type K Thermocouple METER FUNCTION					
Channel	**Calibration Standard**	**UUT As Found**	**UUT As Left Reading 1**	**UUT As Left Reading 2**	**As Left Error**	**Expanded Uncertainty±**
Meter A	0.00	-1.30	-1.30	-1.30	-1.30	0.346
	500.00	498.80	498.80	498.80	-1.20	
	1000.00	999.10	999.10	999.10	-0.90	
	1500.00	1499.10	1499.10	1499.10	-0.90	
	2000.00	1999.10	1999.10	1999.10	-0.90	
	2400.00	2399.10	2399.10	2399.10	-0.90	

Copyright 2013 Cal-Cert. All rights reserved.

Manufacturer: National Instruments **Type:** Data Logger **Serial #:** 1B182FB

Channel	Type K Thermocouple METER FUNCTION					
	Calibration Standard	UUT As Found	UUT As Left Reading 1	UUT As Left Reading 2	As Left Error	Expanded Uncertainty±
Left	0.00	-1.30	-1.30	-1.30	-1.30	0.346
	500.00	498.90	498.90	498.90	-1.10	
	1000.00	999.00	999.00	999.00	-1.00	
	1500.00	1499.20	1499.20	1499.20	-0.80	
	2000.00	1999.20	1999.20	1999.20	-0.80	
	2400.00	2399.20	2399.20	2399.20	-0.80	

Channel	Type K Thermocouple METER FUNCTION					
	Calibration Standard	UUT As Found	UUT As Left Reading 1	UUT As Left Reading 2	As Left Error	Expanded Uncertainty±
Right	0.00	-1.40	-1.40	-1.40	-1.40	0.346
	500.00	498.90	498.90	498.90	-1.10	
	1000.00	999.00	999.00	999.00	-1.00	
	1500.00	1499.00	1499.00	1499.00	-1.00	
	2000.00	1999.00	1999.00	1999.00	-1.00	
	2400.00	2399.10	2399.10	2399.10	-0.90	

Channel	Type K Thermocouple METER FUNCTION					
	Calibration Standard	UUT As Found	UUT As Left Reading 1	UUT As Left Reading 2	As Left Error	Expanded Uncertainty±
Filter B	0.00	0.00	0.00	0.00	0.00	0.346
	500.00	500.60	500.60	500.60	0.60	
	1000.00	1000.30	1000.30	1000.30	0.30	
	1500.00	1500.10	1500.10	1500.10	0.10	
	2000.00	1999.80	1999.80	1999.80	-0.20	
	2400.00	2399.50	2399.50	2399.50	-0.50	

Channel	Type K Thermocouple METER FUNCTION					
	Calibration Standard	UUT As Found	UUT As Left Reading 1	UUT As Left Reading 2	As Left Error	Expanded Uncertainty±
Top	0.00	-1.40	-1.40	-1.40	-1.40	0.346
	500.00	498.90	498.90	498.90	-1.10	
	1000.00	999.00	999.00	999.00	-1.00	
	1500.00	1499.10	1499.10	1499.10	-0.90	
	2000.00	1999.00	1999.00	1999.00	-1.00	
	2400.00	2399.00	2399.00	2399.00	-1.00	

Copyright 2013 Cal-Cert. All rights reserved.

Manufacturer: National Instruments **Type:** Data Logger **Serial #:** 1B182FB

	Type K Thermocouple METER FUNCTION					
Channel	**Calibration Standard**	**UUT As Found**	**UUT As Left Reading 1**	**UUT As Left Reading 2**	**As Left Error**	**Expanded Uncertainty±**
Bottom	0.00	-1.50	-1.50	-1.50	-1.50	0.346
	500.00	498.80	498.80	498.80	-1.20	
	1000.00	999.00	999.00	999.00	-1.00	
	1500.00	1499.00	1499.00	1499.00	-1.00	
	2000.00	1999.00	1999.00	1999.00	-1.00	
	2400.00	2399.00	2399.00	2399.00	-1.00	

	Type K Thermocouple METER FUNCTION					
Channel	**Calibration Standard**	**UUT As Found**	**UUT As Left Reading 1**	**UUT As Left Reading 2**	**As Left Error**	**Expanded Uncertainty±**
Meter B	0.00	-1.30	-1.30	-1.30	-1.30	0.346
	500.00	499.00	499.00	499.00	-1.00	
	1000.00	999.00	999.00	999.00	-1.00	
	1500.00	1499.20	1499.20	1499.20	-0.80	
	2000.00	1999.20	1999.20	1999.20	-0.80	
	2400.00	2399.10	2399.10	2399.10	-0.90	

	Type K Thermocouple METER FUNCTION					
Channel	**Calibration Standard**	**UUT As Found**	**UUT As Left Reading 1**	**UUT As Left Reading 2**	**As Left Error**	**Expanded Uncertainty±**
Meter C	0.00	-1.20	-1.20	-1.20	-1.20	0.346
	500.00	498.90	498.90	498.90	-1.10	
	1000.00	999.10	999.10	999.10	-0.90	
	1500.00	1499.20	1499.20	1499.20	-0.80	
	2000.00	1999.20	1999.20	1999.20	-0.80	
	2400.00	2399.20	2399.20	2399.20	-0.80	

	Type K Thermocouple METER FUNCTION					
Channel	**Calibration Standard**	**UUT As Found**	**UUT As Left Reading 1**	**UUT As Left Reading 2**	**As Left Error**	**Expanded Uncertainty±**
Filter C	0.00	-1.20	-1.20	-1.20	-1.20	0.346
	500.00	499.10	499.10	499.10	-0.90	
	1000.00	999.20	999.20	999.20	-0.80	
	1500.00	1499.30	1499.30	1499.30	-0.70	
	2000.00	1999.30	1999.30	1999.30	-0.70	
	2400.00	2399.20	2399.20	2399.20	-0.80	

Copyright 2013 Cal-Cert. All rights reserved.

Manufacturer: National Instruments **Type:** Data Logger **Serial #:** 1B182FB

	Type T Thermocouple METER FUNCTION					
Channel	**Calibration Standard**	**UUT As Found**	**UUT As Left Reading 1**	**UUT As Left Reading 2**	**As Left Error**	**Expanded Uncertainty±**
Ambient	0.00	-1.40	-1.40	-1.40	-1.40	0.346
	20.00	18.80	18.80	18.80	-1.20	
	40.00	38.80	38.80	38.80	-1.20	
	60.00	58.70	58.70	58.70	-1.30	
	80.00	78.80	78.80	78.80	-1.20	
	100.00	98.70	98.70	98.70	-1.30	

Remarks:

15 Channels tested. Ambient is Type T, tested from 0 to 100 °F per customer request.

We sincerely thank you for your business. Please call us at 503-654-9620 for all your sales and calibration needs.
Cleaning and preventative maintenance were performed as part of this service.

Cal-Cert is accredited by A2LA under Calibration Laboratory Code #4986.01.
A2LA is recognized under the ILAC mutual recognition agreement (MRA).

This certificate is hereby issued that the above instrument was tested for accuracy with calibrated standards traceable to the National Institute of Standards and Technology (NIST). The information provided on this form complies with the data gathering and reporting requirements of ISO/IEC 17025 and ANSI/NCSL Z540.1, and meets the requirements of all applicable references and Cal-Cert procedures listed above.
Any stated measurement uncertainty includes the uncertainty of the Calibration standards used, combined with the uncertainty of the measurement process using the RSS method with a k=2 for an approximate 95% level of confidence. The calibration process meets or exceeds a ratio of 4:1 unless otherwise stated. All tolerances were derived from the applicable standards and pass/fail determination is based on those tolerances. The customer determined any recommended due dates indicated on the certificate.

This report shall not be reproduced except in full, without written approval from Cal-Cert.

Service Engineer: Jon Rau **Date:** February 28, 2023

Technical Manager Marshall Doyle **Signature:** MDoyle

Report #: 28134-206391-14

Copyright 2013 Cal-Cert. All rights reserved.

Making our world more productive

DocNumber: 539508

Linde Gas & Equipment Inc.
5700 S. Alameda Street
Los Angeles CA 90058
Tel: 323-585-2154
Fax: 714-542-6689
PGVP ID: F22023

CERTIFICATE OF ANALYSIS / EPA PROTOCOL GAS

Customer & Order Information

LGEPKG TUALATIN OR H
10450 SW TUALATIN SHERWOOD ROAD
TUALATIN OR 97062-9547

Certificate Issuance Date: 05/08/2023
Linde Order Number: 72422600
Part Number: NI CD17CO8E-AS
Customer PO Number: 80430965

Fill Date: 05/02/2023
Lot Number: 70086312207
Cylinder Style & Outlet: AS CGA 590
Cylinder Pressure and Volume: 1290 psig 99 ft3

Certified Concentration

ProSpec EZ Cert

Expiration Date:	05/08/2031	NIST Traceable
Cylinder Number:	CC505834	Expanded Uncertainty
16.98 %	Carbon dioxide	± 0.13 %
4.30 %	Carbon monoxide	± 0.03 %
17.16 %	Oxygen	± 0.05 %
Balance	Nitrogen	

Certification Information:

Certification Date: 05/08/2023 *Term:* 96 Months *Expiration Date:* 05/08/2031

This cylinder was certified according to the 2012 EPA Traceability Protocol, Document #EPA-600/R-12/531, using Procedure G1. Uncertainty above is expressed as absolute expanded uncertainty at a level of confidence of approximately 95% with a coverage factor k = 2. Do Not Use this Standard if Pressure is less than 100 PSIG.

CO2 responses have been corrected for Oxygen IR Broadening effect. O2 responses have been corrected for CO2 interference.

Analytical Data:

(R=Reference Standard, Z=Zero Gas, C=Gas Candidate)

1. *Component:* **Carbon dioxide**

Requested Concentration: 17 %
Certified Concentration: 16.98 %
Instrument Used: Horiba VIA-510 S/N 20C194WK
Analytical Method: NDIR
Last Multipoint Calibration: 04/25/2023

Reference Standard: Type / Cylinder #: NTRM / CC725981
Concentration / Uncertainty: 19.34 % ±0.03 %
Expiration Date: 01/12/2027
Traceable to: SRM # / Sample # / Cylinder #: NTRM / 190701 / CC725973
SRM Concentration / Uncertainty: 19.34% / ±0.031%
SRM Expiration Date: 01/12/2027

First Analysis Data:								Date	05/08/2023
Z:	0	R:	19.34	C:	16.98	Conc:	16.97		
R:	19.36	Z:	0	C:	16.99	Conc:	16.98		
Z:	0	C:	17	R:	19.35	Conc:	16.99		
UOM:	%					Mean Test Assay:	16.98	%	

Second Analysis Data:								Date	
Z:	0	R:	0	C:	0	Conc:	0		
R:	0	Z:	0	C:	0	Conc:	0		
Z:	0	C:	0	R:	0	Conc:	0		
UOM:	%								

2. *Component:* Carbon monoxide

PRAXAIR
Making our planet more productive

DocNumber: 271687

Praxair Distribution, Inc.
5700 S. Alameda Street
Los Angeles CA 90058
Tel: 323-585-2154
Fax: 714-542-6689
PGVP ID: F22019

CERTIFICATE OF ANALYSIS / EPA PROTOCOL GAS

Customer & Order Information

PXPKG TUALATIN OR H
10450 SW TUALATIN SHERWOOD ROAD
TUALATIN OR 97062-9547

Certificate Issuance Date: 10/16/2019
Praxair Order Number: 71120745
Part Number: NI CD10CO33E-AS
Customer PO Number: 79106732

Fill Date: 10/08/2019
Lot Number: 70086928102
Cylinder Style & Outlet: AS CGA 590
Cylinder Pressure and Volume: 2000 psig 140 ft3

Certified Concentration

ProSpec EZ Cert

Expiration Date:	10/16/2027	NIST Traceable
Cylinder Number:	CC139173	Expanded Uncertainty
10.09 %	Carbon dioxide	± 0.4 %
2.53 %	Carbon monoxide	± 0.6 %
10.48 %	Oxygen	± 0.4 %
Balance	Nitrogen	

Certification Information:

Certification Date: 10/16/2019 *Term:* 96 Months *Expiration Date:* 10/16/2027

This cylinder was certified according to the 2012 EPA Traceability Protocol, Document #EPA-600/R-12/531, using Procedure G1.
Do Not Use this Standard if Pressure is less than 100 PSIG.
CO2 responses have been corrected for Oxygen IR Broadening effect. O2 responses have been corrected for CO2 interference.

Analytical Data:

(R=Reference Standard, Z=Zero Gas, C=Gas Candidate)

1. *Component:* Carbon dioxide

Requested Concentration: 10 %
Certified Concentration: 10.09 %
Instrument Used: Horiba VIA-510 S/N 20C194WK
Analytical Method: NDIR
Last Multipoint Calibration: 09/18/2019

First Analysis Data:							Date	10/16/2019
Z:	0	R:	14	C:	10.09	Conc:	10.09	
R:	14	Z:	0	C:	10.1	Conc:	10.1	
Z:	0	C:	10.1	R:	14.01	Conc:	10.1	
UOM:	%					Mean Test Assay:	10.09	%

Reference Standard: Type / Cylinder #: GMIS / CC164230
Concentration / Uncertainty: 14.00 % ±0.265%
Expiration Date: 04/16/2027
Traceable to: SRM # / Sample # / Cylinder #: SRM 1675b / 6-F-51 / CAL014538
SRM Concentration / Uncertainty: 13.963% / ±0.034%
SRM Expiration Date: 05/16/2022

Second Analysis Data:							Date	
Z:	0	R:	0	C:	0	Conc:	0	
R:	0	Z:	0	C:	0	Conc:	0	
Z:	0	C:	0	R:	0	Conc:	0	
UOM:	%					Mean Test Assay:		%

2. *Component:* Carbon monoxide

Requested Concentration: 2.5 %
Certified Concentration: 2.53 %
Instrument Used: Horiba VIA-510 S/N UB9UCSYX
Analytical Method: NDIR
Last Multipoint Calibration: 09/19/2019

First Analysis Data:							Date	10/16/2019
Z:	0	R:	5	C:	2.53	Conc:	2.53	
R:	5	Z:	0	C:	2.53	Conc:	2.53	
Z:	0	C:	2.54	R:	5.01	Conc:	2.54	
UOM:	%					Mean Test Assay:	2.53	%

Reference Standard: Type / Cylinder #: GMIS / CC242633
Concentration / Uncertainty: 5.00 % ±0.543%
Expiration Date: 04/03/2025
Traceable to: SRM # / Sample # / Cylinder #: SRM 2642a / 51-D-23 / FF23106
SRM Concentration / Uncertainty: 7.859% / ±0.039%
SRM Expiration Date: 07/15/2019

Second Analysis Data:							Date	
Z:	0	R:	0	C:	0	Conc:	0	
R:	0	Z:	0	C:	0	Conc:	0	
Z:	0	C:	0	R:	0	Conc:	0	
UOM:	%					Mean Test Assay:		%

3. *Component:* Oxygen

Requested Concentration: 10.5 %
Certified Concentration: 10.48 %
Instrument Used: OXYMAT 5E
Analytical Method: Paramagnetic
Last Multipoint Calibration: 09/18/2019

First Analysis Data:							Date	10/16/2019
Z:	0	R:	9.88	C:	10.49	Conc:	10.48	
R:	9.88	Z:	0	C:	10.49	Conc:	10.48	
Z:	0	C:	10.5	R:	9.89	Conc:	10.49	
UOM:	%					Mean Test Assay:	10.48	%

Reference Standard: Type / Cylinder #: NTRM / DT0010384
Concentration / Uncertainty: 9.875 % ±0.4%
Expiration Date: 11/18/2022
Traceable to: SRM # / Sample # / Cylinder #: NTRM / 170701 / NTRM DT0010384
SRM Concentration / Uncertainty: 9.875% / ±0.040%
SRM Expiration Date: 11/18/2022

Second Analysis Data:							Date	
Z:	0	R:	0	C:	0	Conc:	0	
R:	0	Z:	0	C:	0	Conc:	0	
Z:	0	C:	0	R:	0	Conc:	0	
UOM:	%					Mean Test Assay:		%

Analyzed By Jose Vasquez

Certified By Jenna Lockman

Information contained herein has been prepared at your request by qualified experts within Praxair Distribution, Inc. While we believe that the information is accurate within the limits of the analytical methods employed and is complete to the extent of the specific analyses performed, we make no warranty or representation as to the suitability of the use of the information for any purpose. The information is offered with the understanding that any use of the information is at the sole discretion and risk of the user. In no event shall the liability of Praxair Distribution, Inc., arising out of the use of the information contained herein exceed the fee established for providing such information.