Hearth & Home Technologies

Project # 19-531
Model: P35i-C
Type: Pellet-Fired Fireplace Insert
December 9, 2019

ASTM E2779 Standard Test Method for Determining Particulate Matter Emissions from Pellet Heaters

Contact: Mr. Corie Podschelne
352 Mountain House Road
Halifax, PA 17032
PodschelneC@hearthnhome.com
610-506-7338

Prepared by: Sebastian Button,
Laboratory Supervisor

11785 SE Highway 212 – Suite 305
Clackamas, OR 97015-9050
(503) 650-0088
WWW.PFSTECO.COM

This page intentionally left blank.

Contents

Affidavit 3
Introduction 4
Notes 4
Pellet Heater Identification and Testing 5
Test Procedures and Equipment 6
Results 7
Summary Table 7
Test Run Narrative 8
Run 1 8
Run 2 8
Test Conditions Summary 8
Appliance Operation and Test Settings 9
Settings & Run Notes 9
Appliance Description 9
Appliance Dimensions 9
Test Fuel Properties 12
Pellet Fuel Analysis 13
Sampling Locations and Descriptions 14
Sample Points 14
Sampling Methods 15
Analytical Methods Description 15
Calibration, Quality Control and Assurances 15
Appliance Sealing and Storage 15
Sealing Label 15
Sealed Unit 16
List of Appendices 17

Affidavit

PFS-TECO was contracted by Hearth & Home Technologies to provide testing services for the P35i-C Pellet-Fired Fireplace Insert per ASTM E2779, *Determining PM Emissions from Pellet Heaters*. All testing and associated procedures were conducted at PFS-TECO's Portland Laboratory on 11/13/2019 – 11/14/2019. PFS-TECO's Portland Laboratory is located at 11785 SE Highway 212 – Suite 305, Clackamas, Oregon 97015. Testing procedures followed ASTM E2779. Particulate sampling was performed per ASTM E2515, *Standard Test Method for Determination of Particulate Matter Emissions Collected by a Dilution Tunnel.*

PFS-TECO is accredited by the U.S. Environmental Protection Agency for the certification and auditing of wood heaters pursuant to subpart AAA of 40 CFR Part 60, New Source Performance Standards for Residential Wood Heaters and subpart QQQQ of 40 CFR Part 60, Standards of Performance for New Hydronic Heaters and Forced Air Furnaces, Methods 28R, 28WHH, 28 WHH-PTS, and all methods listed in Sections 60.534 and 60.5476. PFS-TECO holds EPA Accreditation Certificate Numbers 4 and 4M (mobile). PFS-TECO is accredited by IAS to ISO 17020:2012 "Criteria for Bodies Performing Inspections", and ISO 17025:2005 "Requirements for Testing Laboratories." PFS-TECO is also accredited by Standards Council of Canada to ISO 17065:2012 "Requirements for Bodies Operating Product Certification Systems."

The following people were associated with the testing, analysis and report writing associated with this project.

Sebastian Button, Laboratory Supervisor

Introduction

Hearth & Home Technologies of Halifax, PA, contracted with PFS-TECO to perform EPA certification testing on P35i-C Pellet-Fired Fireplace Insert. All testing was performed at PFS-TECO's Portland Laboratory. Testing was performed by Mr. Sebastian Button.

Notes

- Prior to start of testing, 50 hours of conditioning was performed per ASTM E2779
- Prior to start of testing, the dilution tunnel was cleaned with a steel brush.
- Front filters were changed on sample train A at one hour after the test began.
- Two integrated test runs were performed; Run 1 didn't meet the medium burn rate requirements in accordance with ASTM E2779. Run 2 was performed with a different medium burn rate setting, meeting the requirements of ASTM E2779, as described below:
    - 1 Hour at Maximum Burn Setting
    - 2 Hours at Medium Burn Setting (Defined as <50% of Maximum Burn Rate)
    - 3 Hours at Minimum Burn Setting

Pellet Heater Identification and Testing

- Appliance Tested: ***P35i-C***
- Serial Number: ***HF 662418; PFS Tracking Number 0046***
- Manufacturer*:* ***Hearth & Home Technologies***
- Catalyst: ***No***
- Heat exchange blower: ***Integral***
- Type: ***Pellet Stove***
- Style: ***Insert***
- Date Received: ***Monday, November 11, 2019***
- Testing Period – Start: ***Wednesday, November 13, 2019*** Finish: ***Thursday, November 14, 2019***
- Test Location: ***PFS-TECO Portland Laboratory, 11785 SE HWY 212 - Suite 305, Clackamas, OR 97015***
- Elevation: ***≈131 Feet above sea level***
- Test Technician(s): ***Sebastian Button***
- Observers: ***N/A***

Test Procedures and Equipment

All Sampling and analytical procedures were performed by Sebastian Button. All procedures used are directly from ASTM E2779 and ASTM E2515. See the list below for equipment used. See Appendix C submitted with this report for calibration data.

Equipment List:

Equipment ID#	Equipment Description
041	Rice Lake 3'x3' floor scale w/digital weight indicator
053	APEX XC-60 Digital Emissions Sampling Box A
054	APEX XC-60 Digital Emissions Sampling Box B
055	APEX Ambient sampling box
057	California Analytical ZRE CO2/CO/O2 IR ANALYZER
064	Digital Barometer
109A/B	Troemner 100mg/200mg Audit Weights
107	Sartorius Analytical Balance
051	10 lb audit weight
095	Anemometer
111	Microtector
SA17187	Gas Analyzer Calibration Span Gas
CC170624	Gas Analyzer Calibration Mid Gas

Results

Test Run 1 did not meet the medium burn rate requirements specified by ASTM E2779. The results are reported below for reference but are not valid certification test results.

The integrated test run emission rate for test Run 2 was measured to be **1.5 g/hr** with a Higher Heating Values efficiency of **68.2%** and a CO emission rate of **0.1 g/min.** The calculated first hour particulate emission rate was **1.56 g/hr.** The Hearth & Home Technologies Model P35i-C Pellet-Fired Room Heater meets the 2020 PM emission standard of ≤ 2.0 g/hr per CFR 40 part 60, §60.532 (b).

Detailed individual run data can be found in Appendix A submitted with this report.

Summary Table

Run 1 Results*

Run Number	Date	Segments		Run Time (min)	Heat Output (BTU/hr)	1st Hr Emissions (g/hr)	Integrated Total (g/hr)	CO Emissions (g/min)	Overall CO Emissions (g/min)	Heating Efficiency (%HHV)	Overall Heating Efficiency (%HHV)
		Setting	BR								
1	11/13/2019	H	2.04	60	29215	1.23	1.68	0.08	0.09	74.9%	68.7%
		M	1.27	120	16665			0.09		68.4%	
		L	0.83	180	10206			0.09		63.9%	
		OA	1.18	360	15533			0.09		78.7%	

*Test results invalid due to medium burn rate requirement not being met, see Run 2.

Run 2 Results

Run Number	Date	Segments		Run Time (min)	Heat Output (BTU/hr)	1st Hr Emissions (g/hr)	Integrated Total (g/hr)	CO Emissions (g/min)	Overall CO Emissions (g/min)	Heating Efficiency (%HHV)	Overall Heating Efficiency (%HHV)
		Setting	BR								
2	11/14/2019	H	2.12	60	30614	1.56	1.46	0.16	0.07	75.4%	68.2%
		M	1.00	120	12587			0.06		65.9%	
		L	0.86	180	10546			0.04		63.9%	
		OA	1.12	360	14577			0.07		68.2%	

Test Run Narrative

Run 1

Run 1 was performed on 11/13/2019 as an attempted integrated test run per ASTM E2779. The overall test duration was 360 minutes. The particulate emissions rate for the integrated test run was 1.68 g/hr. The run had an overall HHV efficiency of 68.7%. The train A front filter was changed at 1 hr. The medium burn rate segment of this test did not meet the requirements outlined by ASTM E2779 (Less than 50% of the Maximum burn rate). Therefore, this test is invalid, see Run 2 results.

Run 2

Run 2 was performed on 11/14/2019 as an attempted integrated test run per ASTM E2779. The overall test duration was 360 minutes. The particulate emissions rate for the integrated test run was 1.46 g/hr. The run had an overall HHV efficiency of 68.2%. The train A front filter was changed at 1 hr. All test results were appropriate and valid and the burn rate requirement for the integrated test run were achieved. There were no anomalies and all criteria were met.

Test Conditions Summary

Testing conditions for all runs fell within allowable specifications of ASTM E2779 and ASTM E2515. A summary of facility conditions, fuel burned, and run times is listed below.

Runs	Ambient (°F)		Relative Humidity (%)		Average Barometric Pressure (In. Hg.)	Preburn Fuel Weight (lbs)	Test Fuel Weight (lbs)	Test Fuel Moisture (%DB)	Test Run Time (Min)
	Pre	Post	Pre	Post					
1	70	73	40.8	36.7	29.93	5.3	16.7	6.9	360
2	69	72	33.9	39.7	29.88	4.9	15.8	6.9	360

Appliance Operation and Test Settings

The appliance was operated according to procedures as described in the Operations Manual, found in Appendix B submitted with this report. Detailed run information can be found in Appendix A submitted with this report.

Settings & Run Notes

	Pre-Burn	Test Run
Run 1	Temperature Setting - 7 / Feed Limit – 5.22	High Segment: Temp Setting – 7 / Feed Limit - 5.22 Medium Segment: Temp Setting – 4.5 / Feed Limit - 2.6 Low Segment: Temp Setting – 1 / Feed Limit - 1.9
Run 2	Temperature Setting - 7 / Feed Limit – 5.22	High Segment: Temp Setting – 7 / Feed Limit - 5.22 Medium Segment: Temp Setting – 3 / Feed Limit - 2.0 Low Segment: Temp Setting – 1 / Feed Limit - 1.9

Appliance Description

Model(s): P35i-C

Appliance Type: Pellet-Fired Fireplace Insert

Air Introduction System: Air enters the burn chamber by being pulled though the firepot and air wash, via the exhaust blower, see air flow diagram in Appendix D.

Combustion Control: Feed rate is electronically controlled via user-selectable controls.

Flue Outlet: 4-inch exhaust outlet located on the top/rear of the appliance.

Appliance Dimensions

P35i-C Dimensions

Height	Width	Depth	Firebox Volume
31”	40”	14”	N/A – Pellet Stove

Appliance design drawings can be found in Appendix D submitted with the CBI copy of this report.

Appliance Front

Appliance Left

Appliance Right

Appliance Rear

Test Fuel Properties

Test fuel used was Olympus Pellet Fuel, a PFI Certified Premium Pellet Brand. A sample of pellets was sent to Twin Ports Testing for analysis, see report below.

Pellet Fuel Analysis

TwinPortsTesting

Twin Ports Testing, Inc.
1301 North 3rd Street
Superior, WI 54880
p: 715-392-7114
p: 800-373-2982
f: 715-392-7183
www.twinportstesting.com

Analytical Test Report

Report No: USR:W219-0910-01
Issue No: 1

Client: Hearth & Home Technologies
352 Mountain House Rd
Halifax, PA 17032
Attention: Charlie Maguire

PO No:

Signed:

Stephen Sundeen
Chemistry Laboratory Manager
Date of Issue: 11/15/2019

THIS DOCUMENT SHALL NOT BE REPRODUCED EXCEPT IN FULL

Sample Details

Sample Log No:	W219-0910-01	Sample Date:	
Sample Designation:	40 Lb Pellet Bag	Sample Time:	
Sample Recognized As:	Wood Pellets	Arrival Date:	11/5/2019

Test Results

	METHOD	UNITS	MOISTURE FREE	AS RECEIVED
Moisture Total	ASTM E871	wt. %		6.46
Ash	ASTM D1102	wt. %	0.19	0.18
Volatile Matter	ASTM D3175	wt. %	81.09	75.85
Fixed Carbon by Difference	ASTM D3172	wt. %	18.72	17.51
Sulfur	ASTM D4239	wt. %	0.005	0.005
SO_2	Calculated	lb/mmbtu		0.012
Net Cal. Value at Const. Pressure	ISO 1928	GJ/tonne	18.34	17.00
Gross Cal. Value at Const. Vol.	ASTM E711	Btu/lb	8679	8118
Carbon	ASTM D5373	wt. %	51.13	47.83
Hydrogen*	ASTM D5373	wt. %	8.55	8.00
Nitrogen	ASTM D5373	wt. %	< 0.20	< 0.19
Oxygen*	ASTM D3176	wt. %	> 39.92	> 37.34
*Note: As received values do not include hydrogen and oxygen in the total moisture				
Chlorine	ASTM D6721	mg/kg	32	30
Fluorine	ASTM D3761	mg/kg		
Mercury	ASTM D6722	mg/kg		
Bulk Density	ASTM E873	lbs/ft³		46.45
Fines (Less than 1/8")	TPT CH-P-06	wt.%		0.13
Durability Index	Kansas State	PDI		99.3
Sample Above 1.50"	TPT CH-P-06	wt.%		0.0
Maximum Length (Single Pellet)	TPT CH-P-06	Inch		1.385
Diameter, Range	TPT CH-P-05	Inch	0.253 to	0.259
Diameter, Average	TPT CH-P-05	Inch		0.257
Stated Bag Weight	TPT CH-P-01	lbs		40.0
Actual Bag Weight	TPT CH-P-01	lbs		40.3

Comments:

ilac-MRA

PJLA Testing Accreditation #60243

Results issued on this report only reflect the analysis of the sample submitted. Our reports and letters are for the exclusive and confidential use of our clients and may not be reproduced, except in their entirety, without the written approval of Twin Ports Testing. Twin Ports Testing Laboratory is accredited to the ISO/IEC 17025:2017 standard by PJLA.

Sampling Locations and Descriptions

Sample ports are located 16.5 feet downstream from any disturbances and 1 foot upstream from any disturbances. Flow rate traverse data was collected 12 feet downstream from any disturbances and 5.5 feet upstream from any disturbances. (See below).

Sample Points

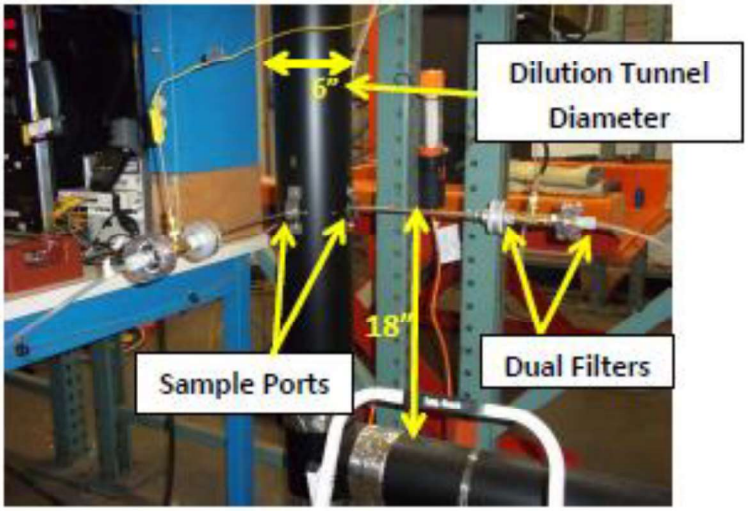

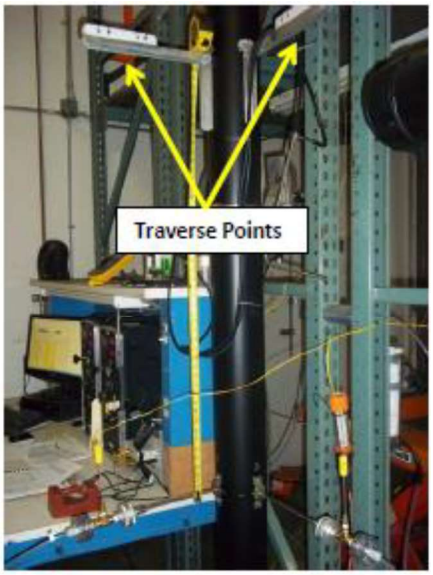

Sampling Methods

ASTM E2515 was used in collecting particulate samples. The dilution tunnel is 6 inches in diameter. All sampling conditions per ASTM E2515 were followed. No alternate procedures were used.

Analytical Methods Description

All sample recovery and analysis procedures followed ASTM E2515 procedures. At the end of each test run, filters, O-Rings and probes were removed from their housings, dessicated for a minimum of 24 hours, and then weighed at 6 hour intervals to a constant weight per ASTM E2515-11 Section 10.

Calibration, Quality Control and Assurances

Calibration procedures and results were conducted per EPA Method 28R, ASTM E2515-11 and ASTM E2780-10. Test method quality control procedures (leak checks, volume meter checks, stratification checks, proportionality results) followed the procedures outlined.

Appliance Sealing and Storage

Upon completion of testing, the appliance was secured with metal strapping and the seal below was applied, the appliance was then returned to the manufacturer's location at: 352 Mountain House Road, Halifax, PA 17032 for archival.

Sealing Label

ATTENTION:

THIS SEAL IS NOT TO BE BROKEN WITHOUT PRIOR AUTHORIZATION FROM THE UNITED STATES ENVIRONMENTAL PROTECTION AGENCY.

THIS APPLIANCE HAS BEEN SEALED INACCORDANCE WITH REQUIREMNTS OF 40CFR PART 60 SUBPART AAA §60.535 (a)(2)(vii)

REPORT #_____ DATE SEALED_____

MANUFACTURER_____ MODEL #_____

Sealed Unit

List of Appendices

The following appendices have been submitted electronically in conjunction with this report:

Appendix A – Test Run Data, Technician Notes, and Sample Analysis

Appendix B – Labels and Manuals

Appendix C –Equipment Calibration Records

Appendix D – Design Drawings (CBI Report Only)

Appendix E – Manufacturer QAP (CBI Report Only)

Twin Ports Testing, Inc.
1301 North 3rd Street
Superior, WI 54880
p: 715-392-7114
p: 800-373-2562
f: 715-392-7163
www.twinportstesting.com

Analytical Test Report

Report No: USR:W219-0910-01
Issue No: 1

Client: Hearth & Home Technologies
352 Mountain House Rd
Halifax, PA 17032
Attention: Charlie Maguire
PO No:

Signed:
Stephen Sundeen
Chemistry Laboratory Manager
Date of Issue: 11/15/2019

THIS DOCUMENT SHALL NOT BE REPRODUCED EXCEPT IN FULL

Sample Details

Sample Log No:	W219-0910-01	**Sample Date:**	
Sample Designation:	40 Lb Pellet Bag	**Sample Time:**	
Sample Recognized As:	Wood Pellets	**Arrival Date:**	11/5/2019

Test Results

	METHOD	UNITS	MOISTURE FREE	AS RECEIVED
Moisture Total	ASTM E871	wt. %		6.46
Ash	ASTM D1102	wt. %	0.19	0.18
Volatile Matter	ASTM D3175	wt. %	81.09	75.85
Fixed Carbon by Difference	ASTM D3172	wt. %	18.72	17.51
Sulfur	ASTM D4239	wt. %	0.005	0.005
SO_2	Calculated	lb/mmbtu		0.012
Net Cal. Value at Const. Pressure	ISO 1928	GJ/tonne	18.34	17.00
Gross Cal. Value at Const. Vol.	ASTM E711	Btu/lb	8679	8118
Carbon	ASTM D5373	wt. %	51.13	47.83
Hydrogen*	ASTM D5373	wt. %	8.55	8.00
Nitrogen	ASTM D5373	wt. %	< 0.20	< 0.19
Oxygen*	ASTM D3176	wt. %	> 39.92	> 37.34
*Note: As received values do not include hydrogen and oxygen in the total moisture.				
Chlorine	ASTM D6721	mg/kg	32	30
Fluorine	ASTM D3761	mg/kg		
Mercury	ASTM D6722	mg/kg		
Bulk Density	ASTM E873	lbs/ft^3		46.45
Fines (Less than 1/8")	TPT CH-P-06	wt.%		0.13
Durability Index	Kansas State	PDI		99.3
Sample Above 1.50"	TPT CH-P-06	wt.%		0.0
Maximum Length (Single Pellet)	TPT CH-P-06	inch		1.385
Diameter, Range	TPT CH-P-05	inch	0.253 to	0.259
Diameter, Average	TPT CH-P-05	inch		0.257
Stated Bag Weight	TPT CH-P-01	lbs		40.0
Actual Bag Weight	TPT CH-P-01	lbs		40.3

Comments:

Accreditation #60243

Results issued on this report only reflect the analysis of the sample submitted. Our reports and letters are for the exclusive and confidential use of our clients and may not be reproduced, except in their entirety, without the written approval of Twin Ports Testing. Twin Ports Testing Laboratory is accredited to the ISO/IEC 17025:2017 standard by PJLA.

PELLET TEST DATA PACKET
ASTM E2779/E2515

Run 1 Data Summary

Client: Hearth & Home Technologies
Model: P35i-C
Job #: 19-531
Tracking #: 0046
Test Date: 11/13/2019

11/15/2019

Techician Signature Date

TEST RESULTS - ASTM E2779 / ASTM E2515

Client: Hearth & Home Technologies
Model: P35i-C
Run #: 1

Job #: 19-531
Tracking #: 0046
Technician: SJB
Date: 11/13/2019

Burn Rate Summary		
High Burn Rate (dry kg/hr)	2.04	
Medium Burn Rate (dry kg/hr)	1.27	62.5% of High Burn Rate
Low Burn Rate (dry kg/hr)	0.83	41.0% of High Burn Rate
Overall Burn Rate (dry kg/hr)	1.18	

	Ambient Sample	Sample Train A	Sample Train B	1st Hour Filter
Total Sample Volume (ft^3)	0.000	52.769	52.691	8.659
Average Gas Velocity in Dilution Tunnel (ft/sec)	14.7			
Average Gas Flow Rate in Dilution Tunnel (dscf/hr)	9532.4			
Average Gas Meter Temperature (°F)	71.7	96.0	97.6	79.3
Total Sample Volume (dscf)	0.000	50.322	49.956	8.513
Average Tunnel Temperature (°F)	102.3			
Total Time of Test (min)	360			
Total Particulate Catch (mg)	0.0	9.1	8.6	1.1
Particulate Concentration, dry-standard (g/dscf)	0.0000000	0.0001808	0.0001722	0.0001292
Total PM Emissions (g)	0.00	10.34	9.85	1.23
Particulate Emission Rate (g/hr)	0.00	1.72	1.64	1.23
Emissions Factor (g/kg)	-	1.46	1.39	0.60
Difference from Average Total Particulate Emissions (g)	-	0.25	0.25	-
Difference from Average Emissions Factor (g/kg)	-	0.04	0.04	-

Final Average Results	
Total Particulate Emissions (g)	10.09
Particulate Emission Rate (g/hr)	1.68
Emissions Factor (g/kg)	1.42
HHV Efficiency (%)	68.7%
LHV Efficiency (%)	73.5%
CO Emissions (g/min)	0.09

Quality Checks	Requirement	Observed	Result
Dual Train Precision	Each train within 7.5% of average emissions (in grams), or emission factors within 0.5 g/kg	See Above	OK
Filter Temps	<90 °F	79	OK
Face Velocity	< 30 ft/min	8.3	OK
Leakage Rate	Less than 4% of average sample rate	0 cfm	OK
Ambient Temp	55-90 °F	Min: 70 / Max: 74	OK
Negative Probe Weight Evaluation	<5% of Total Catch	-1.2%	OK
Pro-Rate Variation	90% of readings between 90-110%; none greater than 120% or less than 80%	See Data Tabs	OK
Medium Burn Rate	< 50% of High	62.5%	Not Acceptable

Overall Pellet Test Efficiency Results

Manufacturer: Hearth & Home Technologies
Model: P35i-C
Date: 11/13/19
Run: 1
Control #: 19-531
Test Duration: 360
Output Category: Integrated

Test Results in Accordance with CSA B415.1-09

	HHV Basis	LHV Basis
Overall Efficiency	68.7%	73.5%
Combustion Efficiency	99.5%	99.5%
Heat Transfer Efficiency	69.1%	73.9%

Output Rate (kJ/h)	16,375	15,533	**(Btu/h)**
Burn Rate (kg/h)	1.18	2.60	**(lb/h)**
Input (kJ/h)	23,832	22,608	**(Btu/h)**

Test Load Weight (dry kg)	7.09	15.62	**dry lb**
MC wet (%)	6.45		
MC dry (%)	6.90		
Particulate (g)	10.09		
CO (g)	32		
Test Duration (h)	6.00		

Emissions	Particulate	CO
g/MJ Output	0.10	0.32
g/kg Dry Fuel	1.42	4.46
g/h	1.68	5.26
g/min	0.03	0.09
lb/MM Btu Output	0.24	0.75

Air/Fuel Ratio (A/F)	28.57

VERSION: **2.2** **12/14/2009**

Max Burn Rate Segment Efficiency Results

Manufacturer: Hearth & Home Technologies
Model: P35i-C
Date: 11/13/19
Run: 1
Control #: 19-531
Test Duration: 60
Output Category: Maximum

Test Results in Accordance with CSA B415.1-09

	HHV Basis	LHV Basis
Overall Efficiency	74.9%	80.1%
Combustion Efficiency	99.5%	99.5%
Heat Transfer Efficiency	75.3%	80.5%

Output Rate (kJ/h)	30,797	29,215	**(Btu/h)**
Burn Rate (kg/h)	2.04	4.49	**(lb/h)**
Input (kJ/h)	41,100	38,988	**(Btu/h)**

Test Load Weight (dry kg)	2.04	4.49	**dry lb**
MC wet (%)	6.45		
MC dry (%)	6.90		
Particulate (g)	N/A		
CO (g)	5		
Test Duration (h)	1.00		

Emissions	Particulate	CO
g/MJ Output	N/A	0.16
g/kg Dry Fuel	N/A	2.49
g/h	N/A	5.07
g/min	N/A	0.08
lb/MM Btu Output	N/A	0.38

Air/Fuel Ratio (A/F)	14.34

VERSION: **2.2** **12/14/2009**

Medium Burn Rate Segment Efficiency Results

Manufacturer: Hearth & Home Technologies
Model: P35i-C
Date: 11/13/19
Run: 1
Control #: 19-531
Test Duration: 120
Output Category: Medium

Test Results in Accordance with CSA B415.1-09

	HHV Basis	LHV Basis
Overall Efficiency	68.4%	73.1%
Combustion Efficiency	99.5%	99.5%
Heat Transfer Efficiency	68.7%	73.5%

Output Rate (kJ/h)	17,567	16,665	**(Btu/h)**
Burn Rate (kg/h)	1.27	2.81	**(lb/h)**
Input (kJ/h)	25,688	24,367	**(Btu/h)**

Test Load Weight (dry kg)	2.55	5.61	**dry lb**
MC wet (%)	6.45		
MC dry (%)	6.90		
Particulate (g)	N/A		
CO (g)	11		
Test Duration (h)	2.00		

Emissions	Particulate	CO
g/MJ Output	N/A	0.32
g/kg Dry Fuel	N/A	4.47
g/h	N/A	5.69
g/min	N/A	0.09
lb/MM Btu Output	N/A	0.75

Air/Fuel Ratio (A/F)	27.23

VERSION: **2.2** **12/14/2009**

Minimum Burn Rate Segment Efficiency Results

Manufacturer: Hearth & Home Technologies
Model: P35i-C
Date: 11/13/19
Run: 1
Control #: 19-531
Test Duration: 180
Output Category: Minimum

Test Results in Accordance with CSA B415.1-09

	HHV Basis	LHV Basis
Overall Efficiency	63.9%	68.3%
Combustion Efficiency	99.5%	99.5%
Heat Transfer Efficiency	64.2%	68.7%

Output Rate (kJ/h)	10,759	10,206	**(Btu/h)**
Burn Rate (kg/h)	0.83	1.84	**(lb/h)**
Input (kJ/h)	16,840	15,974	**(Btu/h)**

Test Load Weight (dry kg)	2.50	5.52	**dry lb**
MC wet (%)	6.45		
MC dry (%)	6.90		
Particulate (g)	N/A		
CO (g)	15		
Test Duration (h)	3.00		

Emissions	Particulate	CO
g/MJ Output	N/A	0.48
g/kg Dry Fuel	N/A	6.14
g/h	N/A	5.12
g/min	N/A	0.09
lb/MM Btu Output	N/A	1.11

Air/Fuel Ratio (A/F)	44.83

VERSION: **2.2** **12/14/2009**

DILUTION TUNNEL & MISC. DATA - ASTM E2779 / E2515

Client:	Hearth & Home Technologies	Job #:	19-531
Model:	P35i-C	Tracking #:	0046
Run #:	1	Technician:	SJB
Test Start Time:	7:23	Date:	11/13/2019

High Burn End Time (min):	60
Medium Burn End Time (min):	180
Total Sampling Time (min):	360
Recording Interval (min):	1

Meter Box γ Factor:	0.999	(A)
Meter Box γ Factor:	0.996	(B)
Meter Box γ Factor:	0.992	(Ambient)

Induced Draft Check (in. H_2O):	0
Smoke Capture Check (%):	100%
Date Flue Pipe Last Cleaned:	11/12/2019

	Pre-Test	Post Test	Avg.
Barometric Pressure (in. Hg)	29.97	29.89	29.93
Relative Humidity (%)	40.8	36.7	
Room Air Velocity (ft/min)	0	0	
Scale Audit (lbs)	10.0	10.0	
Ambient Sample Volume:			ft^3

Sample Train Post-Test Leak Checks

(A)	0.000	cfm @	-11	in. Hg
(B)	0.000	cfm @	-13	in. Hg
(Ambient)		cfm @		in. Hg

DILUTION TUNNEL FLOW

Traverse Data

Point	dP (in H_2O)	Temp (°F)
1	0.040	105
2	0.050	105
3	0.050	105
4	0.040	105
5	0.034	105
6	0.048	105
7	0.046	105
8	0.040	105
Center	0.050	105

Static Pressure: -0.140 in. H_2O

Dilution Tunnel H_2O:	2.00	percent
Tunnel Diameter:	6	inches
Pitot Tube Cp:	0.99	[unitless]
Dilution Tunnel MW(dry):	29.00	lb/lb-mole
Dilution Tunnel MW(wet):	28.78	lb/lb-mole
Tunnel Area:	0.1963	ft^2
V_{strav}:	14.38	ft/sec
V_{scent}:	15.32	ft/sec
F_p:	0.939	[ratio]
Initial Tunnel Flow:	154.0	scf/min

TEST FUEL PROPERTIES

Default Fuel Values

Fuel Type:	D. Fir	Oak
HHV (kJ/kg)	19,810	19,887
%C	48.73	50
%H	6.87	6.6
%O	43.9	42.9
%Ash	0.5	0.5

Actual Fuel Used Properties

Pellet Brand:	Olympus
Pellet Fuel Grade:	PFI Premium
HHV (kJ/kg)	20,174
%C	51.13
%H	6.08
%O	42.6
%Ash	0.19
MC (%DB)	6.90

PELLET STOVE PREBURN DATA - ASTM E2779

Client: Hearth & Home Technologies
Model: P35i-C
Run #: 1

Job #: 19-531
Tracking #: 0046
Technician: SJB
Date: 11/13/2019

Recording Interval (min): 1
Run Time (min): 60

Elapsed Time (min)	Scale Reading (lbs)	Weight Change (lbs)	Flue Draft (in H_2O)	Flue (°F)	Ambient (°F)
		Average:	-0.077	430	69
0	40.1	-	-0.109	352	67
1	40.0	-0.1	-0.101	362	67
2	39.9	-0.1	-0.093	370	67
3	39.8	-0.1	-0.060	381	67
4	39.8	0	-0.077	389	67
5	39.7	-0.1	-0.083	395	67
6	39.7	0	-0.076	401	68
7	39.5	-0.2	-0.093	407	68
8	39.4	-0.1	-0.092	408	68
9	39.4	0	-0.095	413	68
10	39.2	-0.2	-0.091	422	68
11	39.1	-0.1	-0.082	425	68
12	39.0	-0.1	-0.061	428	68
13	38.9	-0.1	-0.116	429	68
14	38.8	-0.1	-0.096	429	68
15	38.7	-0.1	-0.070	432	68
16	38.7	0	-0.062	433	68
17	38.6	-0.1	-0.070	430	68
18	38.5	-0.1	-0.071	429	69
19	38.4	-0.1	-0.059	431	69
20	38.3	-0.1	-0.082	432	69
21	38.1	-0.2	-0.055	434	69
22	38.1	0	-0.103	439	69
23	38.0	-0.1	-0.045	441	69
24	38.0	0	-0.081	440	69
25	37.9	-0.1	-0.069	441	69
26	37.8	-0.1	-0.079	442	69
27	37.7	-0.1	-0.096	444	69
28	37.6	-0.1	-0.033	444	69
29	37.5	-0.1	-0.108	445	69
30	37.4	-0.1	-0.090	442	69
31	37.4	0	-0.071	438	69
32	37.3	-0.1	-0.035	434	69
33	37.2	-0.1	-0.072	434	69
34	37.1	-0.1	-0.104	439	69
35	37.0	-0.1	-0.041	444	69
36	36.9	-0.1	-0.066	445	69
37	36.9	0	-0.081	443	69
38	36.7	-0.2	-0.105	441	69
39	36.7	0	-0.075	443	69
40	36.6	-0.1	-0.064	443	70
41	36.5	-0.1	-0.042	445	69
42	36.4	-0.1	-0.081	448	70
43	36.3	-0.1	-0.057	449	70
44	36.2	-0.1	-0.056	449	70
45	36.1	-0.1	-0.051	447	70
46	36.1	0	-0.112	446	70

PELLET STOVE PREBURN DATA - ASTM E2779

Client: Hearth & Home Technologies
Job #: 19-531
Model: P35i-C
Tracking #: 0046
Run #: 1
Technician: SJB
Date: 11/13/2019

47	36.0	-0.1	-0.123	443	70
48	35.9	-0.1	-0.083	440	70
49	35.8	-0.1	-0.075	437	70
50	35.8	0	-0.061	438	70
51	35.7	-0.1	-0.097	442	70
52	35.6	-0.1	-0.073	442	70
53	35.5	-0.1	-0.067	442	70
54	35.4	-0.1	-0.052	444	70
55	35.3	-0.1	-0.047	441	70
56	35.3	0	-0.062	438	70
57	35.2	-0.1	-0.049	435	70
58	35.1	-0.1	-0.112	430	70
59	35.0	-0.1	-0.083	434	70
60	34.8	-0.2	-0.083	439	70

BOX A TEST DATA - ASTM E2779 / ASTM E2515

Client: Hearth & Home Technologies
Model: P35i-C
Run #: 1

Job #: 19-531
Tracking #: 0046
Technician: SJB
Date: 11/13/2019

	Particulate Sampling Data							Fuel Weight (lb)		Temperature Data (°F)			
Elapsed Time (min)	Gas Meter (ft^3)	Sample Rate (cfm)	Dilution Tunnel dP (in H_2O)	Orifice dH (in H_2O)	Meter Temp (°F)	Meter Vacuum (in Hg)	Pro. Rate (%)	Scale Reading	Weight Change	Dilution Tunnel	Flue	Filter	Ambient
0	0.000		0.052	0.02	71	0		16.7		106	439	68	70
1	0.128	0.128	0.054	2.22	71	0	90	16.7	0.0	106	440	69	70
2	0.274	0.146	0.051	2.18	71	-2.38	106	16.6	-0.1	106	439	69	70
3	0.415	0.141	0.050	2.19	71	-2.52	103	16.5	-0.1	106	442	69	70
4	0.560	0.145	0.060	2.18	71	-2.7	97	16.4	-0.1	106	446	69	70
5	0.699	0.139	0.051	2.16	71	-2.49	101	16.4	0.0	106	450	70	70
6	0.847	0.148	0.055	2.23	71	-2.63	103	16.3	-0.1	106	448	70	70
7	0.988	0.141	0.056	2.23	72	-2	97	16.2	-0.1	107	449	70	70
8	1.136	0.148	0.049	2.19	72	-1.63	109	16.1	-0.1	107	450	70	70
9	1.277	0.141	0.053	2.22	72	-1.69	100	16.0	-0.1	107	449	70	70
10	1.425	0.148	0.053	2.22	72	-2.6	105	15.9	-0.1	107	448	70	70
11	1.567	0.142	0.048	2.18	73	-2.48	106	15.9	0.0	107	447	70	70
12	1.713	0.146	0.054	2.20	73	-1.03	103	15.8	-0.1	107	444	71	70
13	1.855	0.142	0.052	2.20	73	-2.57	102	15.7	-0.1	107	443	71	70
14	2.000	0.145	0.055	2.20	73	-2.57	101	15.6	-0.1	107	444	71	70
15	2.142	0.142	0.057	2.19	74	-2.13	97	15.5	-0.1	107	445	71	70
16	2.286	0.144	0.046	2.19	74	-0.05	109	15.3	-0.2	107	445	71	70
17	2.431	0.145	0.055	2.18	74	-0.83	101	15.4	0.1	107	447	71	70
18	2.574	0.143	0.050	2.18	75	-2.51	104	15.3	-0.1	107	444	71	70
19	2.720	0.146	0.053	2.18	75	-0.65	103	15.2	-0.1	107	439	71	70
20	2.863	0.143	0.050	2.20	76	-0.01	104	15.1	-0.1	107	434	72	70
21	3.009	0.146	0.051	2.19	76	-2.63	105	15.1	0.0	107	428	72	70
22	3.151	0.142	0.054	2.19	76	-0.02	99	15.0	-0.1	107	424	72	70
23	3.297	0.146	0.048	2.17	77	-2.61	108	14.9	-0.1	106	426	72	70
24	3.438	0.141	0.056	2.18	77	-2.25	96	14.8	-0.1	107	433	72	70
25	3.585	0.147	0.054	2.18	77	-0.29	102	14.8	0.0	107	435	72	70
26	3.726	0.141	0.051	2.18	78	-1.22	101	14.7	-0.1	107	438	72	70
27	3.874	0.148	0.051	2.19	78	-0.99	106	14.6	-0.1	107	443	72	70
28	4.015	0.141	0.050	2.16	79	-0.95	102	14.4	-0.2	107	452	72	70
29	4.163	0.148	0.056	2.18	79	-1.77	101	14.4	0.0	107	452	72	70
30	4.305	0.142	0.052	2.18	79	-2.01	100	14.3	-0.1	107	451	73	70
31	4.452	0.147	0.050	2.17	80	0	106	14.2	-0.1	107	451	73	70
32	4.594	0.142	0.054	2.18	80	-2.02	98	14.0	-0.2	107	453	73	70

BOX A TEST DATA - ASTM E2779 / ASTM E2515

Client: Hearth & Home Technologies
Model: P35i-C
Run #: 1

Job #: 19-531
Tracking #: 0046
Technician: SJB
Date: 11/13/2019

	Particulate Sampling Data							Fuel Weight (lb)		Temperature Data (°F)			
Elapsed Time (min)	Gas Meter (ft^3)	Sample Rate (cfm)	Dilution Tunnel dP (in H_2O)	Orifice dH (in H_2O)	Meter Temp (°F)	Meter Vacuum (in Hg)	Pro. Rate (%)	Scale Reading	Weight Change	Dilution Tunnel	Flue	Filter	Ambient
33	4.741	0.147	0.050	2.16	81	-2.4	106	14.0	0.0	107	452	73	71
34	4.884	0.143	0.052	2.17	81	-0.37	101	13.9	-0.1	107	445	73	71
35	5.029	0.145	0.046	2.17	81	-1.33	109	13.9	0.0	107	442	73	70
36	5.172	0.143	0.049	2.16	82	-1.71	104	13.8	-0.1	107	441	73	70
37	5.317	0.145	0.051	2.18	82	-0.06	103	13.7	-0.1	107	436	73	71
38	5.462	0.145	0.052	2.17	82	-1.79	102	13.7	0.0	107	435	73	71
39	5.607	0.145	0.049	2.17	83	-0.53	105	13.6	-0.1	107	437	73	70
40	5.753	0.146	0.051	2.17	83	-0.22	104	13.5	-0.1	107	439	73	71
41	5.896	0.143	0.049	2.18	83	-1.51	103	13.4	-0.1	107	440	73	71
42	6.043	0.147	0.056	2.18	84	-2.58	99	13.3	-0.1	107	441	73	71
43	6.187	0.144	0.053	2.17	84	-1.34	100	13.3	0.0	107	436	73	71
44	6.334	0.147	0.050	2.18	84	-2.62	105	13.2	-0.1	107	438	74	71
45	6.476	0.142	0.053	2.18	85	-2.47	98	13.0	-0.2	107	442	74	71
46	6.624	0.148	0.054	2.18	85	0	102	13.0	0.0	107	446	74	71
47	6.766	0.142	0.050	2.18	85	-2.11	101	12.9	-0.1	107	448	74	71
48	6.914	0.148	0.051	2.16	85	-1.79	105	12.8	-0.1	107	448	74	71
49	7.056	0.142	0.054	2.16	86	0	97	12.6	-0.2	107	449	74	71
50	7.205	0.149	0.051	2.15	86	-0.17	105	12.7	0.1	107	443	74	71
51	7.347	0.142	0.051	2.18	86	-2.53	100	12.6	-0.1	108	443	74	71
52	7.495	0.148	0.053	2.17	87	-0.23	102	12.5	-0.1	108	444	74	71
53	7.637	0.142	0.054	2.16	87	-2.17	97	12.4	-0.1	107	442	74	71
54	7.786	0.149	0.055	2.17	87	0	101	12.4	0.0	108	438	74	71
55	7.928	0.142	0.052	2.18	87	-2.03	99	12.3	-0.1	108	435	74	71
56	8.077	0.149	0.055	2.15	88	-2.51	101	12.2	-0.1	108	437	74	71
57	8.219	0.142	0.051	2.16	88	0	100	12.1	-0.1	108	442	74	71
58	8.368	0.149	0.053	2.18	88	-2.64	103	12.0	-0.1	108	444	74	71
59	8.510	0.142	0.048	2.16	89	-2.65	103	11.9	-0.1	108	445	74	71
60	8.659	0.149	0.055	2.15	89	-1.52	101	11.9	0.0	108	444	74	71
61	8.802	0.143	0.049	2.17	89	-0.49	102	11.8	-0.1	108	442	74	71
62	8.957	0.155	0.049	2.19	89	0	111	11.7	-0.1	107	431	74	71
63	9.100	0.143	0.051	2.17	89	-1.23	100	11.7	0.0	107	417	74	71
64	9.249	0.149	0.049	2.16	90	-1.86	106	11.7	0.0	106	400	74	71
65	9.392	0.143	0.050	2.19	90	-0.11	101	11.6	-0.1	106	385	74	71

BOX A TEST DATA - ASTM E2779 / ASTM E2515

Client: Hearth & Home Technologies
Model: P35i-C
Run #: 1

Job #: 19-531
Tracking #: 0046
Technician: SJB
Date: 11/13/2019

	Particulate Sampling Data							Fuel Weight (lb)		Temperature Data (°F)			
Elapsed Time (min)	Gas Meter (ft^3)	Sample Rate (cfm)	Dilution Tunnel dP (in H_2O)	Orifice dH (in H_2O)	Meter Temp (°F)	Meter Vacuum (in Hg)	Pro. Rate (%)	Scale Reading	Weight Change	Dilution Tunnel	Flue	Filter	Ambient
66	9.541	0.149	0.053	2.18	90	0	102	11.6	0.0	105	375	74	71
67	9.685	0.144	0.057	2.17	90	-0.07	95	11.6	0.0	105	366	74	71
68	9.834	0.149	0.054	2.17	90	-2.24	101	11.5	-0.1	105	361	74	71
69	9.977	0.143	0.047	2.16	91	-0.96	104	11.5	0.0	104	354	74	71
70	10.126	0.149	0.060	2.15	91	0	96	11.5	0.0	104	349	74	71
71	10.270	0.144	0.050	2.16	91	0	101	11.4	-0.1	103	349	74	71
72	10.419	0.149	0.052	2.18	91	-1.34	103	11.3	-0.1	103	352	74	71
73	10.562	0.143	0.052	2.15	91	-2.35	99	11.3	0.0	103	356	74	71
74	10.711	0.149	0.046	2.19	92	-2.55	109	11.3	0.0	103	355	74	71
75	10.855	0.144	0.050	2.17	92	0	101	11.2	-0.1	103	356	74	71
76	11.004	0.149	0.058	2.17	92	-1.99	97	11.2	0.0	103	356	74	71
77	11.148	0.144	0.050	2.20	92	-1.52	101	11.1	-0.1	103	357	74	71
78	11.297	0.149	0.051	2.18	92	-2.15	104	11.1	0.0	103	356	74	71
79	11.441	0.144	0.053	2.19	92	-0.02	98	11.0	-0.1	103	352	74	71
80	11.590	0.149	0.051	2.21	93	0	103	11.0	0.0	102	353	74	71
81	11.734	0.144	0.057	2.17	93	-2.4	95	10.9	-0.1	103	353	74	71
82	11.884	0.150	0.049	2.18	93	-2.53	106	10.9	0.0	103	351	74	71
83	12.028	0.144	0.056	2.18	93	-2.15	95	10.8	-0.1	103	352	74	71
84	12.177	0.149	0.055	2.19	93	0	100	10.8	0.0	103	351	74	71
85	12.321	0.144	0.049	2.20	93	-0.9	102	10.7	-0.1	102	349	74	71
86	12.470	0.149	0.053	2.19	94	0	101	10.7	0.0	102	347	74	71
87	12.614	0.144	0.053	2.18	94	-1.2	98	10.6	-0.1	102	351	74	71
88	12.764	0.150	0.052	2.18	94	-1.58	103	10.6	0.0	102	352	74	71
89	12.908	0.144	0.052	2.18	94	-2.59	99	10.5	-0.1	102	351	74	71
90	13.057	0.149	0.053	2.17	94	-0.96	101	10.6	0.1	102	353	74	71
91	13.201	0.144	0.053	2.18	94	-2.52	98	10.4	-0.2	102	356	74	71
92	13.351	0.150	0.050	2.17	94	0	105	10.4	0.0	102	350	74	71
93	13.496	0.145	0.054	2.18	94	-0.94	98	10.3	-0.1	102	347	74	71
94	13.646	0.150	0.054	2.17	95	0	101	10.3	0.0	102	348	74	71
95	13.790	0.144	0.055	2.19	95	-2.62	96	10.2	-0.1	102	346	74	71
96	13.939	0.149	0.050	2.19	95	0	104	10.2	0.0	102	349	74	71
97	14.084	0.145	0.048	2.17	95	-2.69	103	10.1	-0.1	102	348	74	71
98	14.234	0.150	0.054	2.18	95	-0.01	101	10.1	0.0	102	346	74	71

BOX A TEST DATA - ASTM E2779 / ASTM E2515

Client: Hearth & Home Technologies
Model: P35i-C
Run #: 1

Job #: 19-531
Tracking #: 0046
Technician: SJB
Date: 11/13/2019

	Particulate Sampling Data							Fuel Weight (lb)		Temperature Data (°F)			
Elapsed Time (min)	Gas Meter (ft^3)	Sample Rate (cfm)	Dilution Tunnel dP (in H_2O)	Orifice dH (in H_2O)	Meter Temp (°F)	Meter Vacuum (in Hg)	Pro. Rate (%)	Scale Reading	Weight Change	Dilution Tunnel	Flue	Filter	Ambient
99	14.378	0.144	0.052	2.20	95	-2.62	99	10.0	-0.1	102	344	74	71
100	14.527	0.149	0.051	2.17	95	-0.49	103	10.0	0.0	102	347	75	71
101	14.672	0.145	0.051	2.18	95	0	100	9.9	-0.1	102	344	75	71
102	14.822	0.150	0.049	2.17	95	-1.18	106	9.9	0.0	102	345	75	71
103	14.966	0.144	0.051	2.18	96	-2.03	99	9.8	-0.1	102	349	74	71
104	15.117	0.151	0.049	2.18	96	0	106	9.9	0.1	102	349	74	71
105	15.261	0.144	0.049	2.17	96	-1.42	101	9.7	-0.2	102	350	74	71
106	15.411	0.150	0.054	2.18	96	-1.57	101	9.6	-0.1	102	350	74	71
107	15.555	0.144	0.048	2.16	96	-2.57	102	9.6	0.0	102	348	74	71
108	15.706	0.151	0.050	2.18	96	-2.5	105	9.6	0.0	102	350	74	71
109	15.850	0.144	0.054	2.19	96	0	96	9.5	-0.1	102	349	74	71
110	16.000	0.150	0.050	2.18	96	-2.45	104	9.5	0.0	102	351	74	71
111	16.144	0.144	0.056	2.16	96	-2.09	95	9.4	-0.1	102	349	74	71
112	16.294	0.150	0.054	2.16	96	-1.14	101	9.5	0.1	102	346	74	71
113	16.438	0.144	0.050	2.18	96	-0.98	100	9.2	-0.3	102	344	74	71
114	16.588	0.150	0.051	2.16	97	0	103	9.3	0.1	102	343	75	71
115	16.732	0.144	0.052	2.16	97	-2.36	98	9.2	-0.1	102	347	75	71
116	16.882	0.150	0.051	2.17	97	-2.26	103	9.2	0.0	102	347	74	71
117	17.027	0.145	0.052	2.18	97	-0.06	99	9.1	-0.1	102	348	75	71
118	17.176	0.149	0.051	2.18	97	0	103	9.1	0.0	102	354	75	71
119	17.320	0.144	0.049	2.16	97	-0.33	101	8.9	-0.2	102	354	75	71
120	17.470	0.150	0.052	2.18	97	-0.34	102	9.0	0.1	102	357	75	71
121	17.615	0.145	0.053	2.17	97	-2.38	98	8.9	-0.1	102	357	75	71
122	17.764	0.149	0.052	2.17	97	0	102	8.9	0.0	102	358	75	71
123	17.909	0.145	0.056	2.17	97	-2.57	95	8.8	-0.1	102	359	75	71
124	18.059	0.150	0.052	2.19	97	0	102	8.8	0.0	102	357	75	71
125	18.204	0.145	0.053	2.17	97	-0.75	98	8.7	-0.1	102	353	75	71
126	18.353	0.149	0.048	2.17	97	-1.68	106	8.6	-0.1	102	352	75	71
127	18.498	0.145	0.054	2.18	97	-2.63	97	8.6	0.0	102	354	75	71
128	18.648	0.150	0.056	2.17	97	-2.19	99	8.5	-0.1	102	350	75	71
129	18.792	0.144	0.053	2.17	97	-1.36	97	8.5	0.0	102	349	75	71
130	18.942	0.150	0.048	2.19	97	0	106	8.5	0.0	102	352	75	71
131	19.086	0.144	0.052	2.18	98	-2.73	98	8.4	-0.1	102	351	75	71

BOX A TEST DATA - ASTM E2779 / ASTM E2515

Client: Hearth & Home Technologies
Model: P35i-C
Run #: 1

Job #: 19-531
Tracking #: 0046
Technician: SJB
Date: 11/13/2019

	Particulate Sampling Data							Fuel Weight (lb)		Temperature Data (°F)			
Elapsed Time (min)	Gas Meter (ft^3)	Sample Rate (cfm)	Dilution Tunnel dP (in H_2O)	Orifice dH (in H_2O)	Meter Temp (°F)	Meter Vacuum (in Hg)	Pro. Rate (%)	Scale Reading	Weight Change	Dilution Tunnel	Flue	Filter	Ambient
132	19.235	0.149	0.056	2.17	98	-0.94	98	8.4	0.0	102	354	75	71
133	19.380	0.145	0.047	2.18	98	0	104	8.3	-0.1	102	356	75	71
134	19.529	0.149	0.050	2.17	98	-1.29	103	8.2	-0.1	102	357	75	71
135	19.674	0.145	0.052	2.18	98	-1.29	99	8.2	0.0	103	358	75	71
136	19.823	0.149	0.051	2.18	98	-1.13	102	8.2	0.0	103	358	75	71
137	19.968	0.145	0.050	2.18	98	-0.4	101	8.1	-0.1	103	357	75	71
138	20.117	0.149	0.050	2.16	98	-1.97	103	8.0	-0.1	103	353	75	71
139	20.263	0.146	0.052	2.17	98	-2.21	99	7.9	-0.1	103	352	75	71
140	20.411	0.148	0.050	2.13	98	-0.67	103	8.0	0.1	103	354	75	71
141	20.557	0.146	0.055	2.17	98	-1.35	97	7.9	-0.1	103	353	75	71
142	20.706	0.149	0.050	2.17	98	0	103	7.8	-0.1	103	352	75	71
143	20.852	0.146	0.054	2.17	98	-0.31	98	7.7	-0.1	103	350	75	71
144	21.000	0.148	0.048	2.15	98	-0.94	105	7.8	0.1	103	347	75	71
145	21.146	0.146	0.054	2.16	98	-1.86	98	7.7	-0.1	103	349	75	71
146	21.294	0.148	0.047	2.17	98	-1.53	106	7.6	-0.1	103	351	75	71
147	21.440	0.146	0.049	2.17	98	-1.5	102	7.6	0.0	103	355	75	71
148	21.588	0.148	0.053	2.17	98	-2.66	100	7.6	0.0	103	354	75	71
149	21.734	0.146	0.052	2.16	98	-0.61	99	7.5	-0.1	103	355	75	71
150	21.882	0.148	0.050	2.16	98	-0.68	103	7.5	0.0	103	354	75	71
151	22.029	0.147	0.052	2.17	98	-0.44	100	7.4	-0.1	103	354	75	71
152	22.176	0.147	0.056	2.15	98	-0.74	96	7.3	-0.1	103	352	75	71
153	22.323	0.147	0.052	2.16	98	0	100	7.3	0.0	103	351	75	71
154	22.470	0.147	0.057	2.16	98	0	96	7.2	-0.1	103	352	75	71
155	22.618	0.148	0.050	2.17	98	-0.57	103	7.2	0.0	103	353	75	71
156	22.765	0.147	0.055	2.16	98	0	97	7.1	-0.1	103	353	75	71
157	22.912	0.147	0.052	2.14	98	-2.18	100	7.0	-0.1	103	351	75	71
158	23.059	0.147	0.053	2.18	98	-0.85	99	7.1	0.1	103	348	75	71
159	23.206	0.147	0.049	2.15	98	-2.27	103	7.0	-0.1	103	347	75	71
160	23.353	0.147	0.052	2.17	99	0	100	7.0	0.0	103	348	75	71
161	23.501	0.148	0.056	2.15	99	-2.12	97	6.9	-0.1	103	351	75	71
162	23.647	0.146	0.053	2.17	99	0	98	6.8	-0.1	103	357	75	72
163	23.796	0.149	0.047	2.16	99	-0.74	107	6.8	0.0	103	358	75	72
164	23.942	0.146	0.054	2.16	99	0	97	6.7	-0.1	103	353	75	72

BOX A TEST DATA - ASTM E2779 / ASTM E2515

Client: Hearth & Home Technologies
Model: P35i-C
Run #: 1

Job #: 19-531
Tracking #: 0046
Technician: SJB
Date: 11/13/2019

	Particulate Sampling Data							Fuel Weight (lb)		Temperature Data (°F)			
Elapsed Time (min)	Gas Meter (ft^3)	Sample Rate (cfm)	Dilution Tunnel dP (in H_2O)	Orifice dH (in H_2O)	Meter Temp (°F)	Meter Vacuum (in Hg)	Pro. Rate (%)	Scale Reading	Weight Change	Dilution Tunnel	Flue	Filter	Ambient
165	24.090	0.148	0.052	2.16	99	-2.22	101	6.7	0.0	103	351	75	72
166	24.236	0.146	0.054	2.18	99	-0.5	97	6.6	-0.1	103	351	75	72
167	24.384	0.148	0.052	2.15	99	-2.66	101	6.6	0.0	103	348	75	72
168	24.530	0.146	0.050	2.17	99	-2.37	101	6.5	-0.1	104	352	75	72
169	24.678	0.148	0.056	2.15	99	-2.5	97	6.5	0.0	104	350	75	72
170	24.824	0.146	0.048	2.16	99	-1.82	103	6.5	0.0	104	351	75	72
171	24.972	0.148	0.050	2.16	99	-0.18	103	6.4	-0.1	104	352	75	72
172	25.118	0.146	0.049	2.16	99	-0.56	102	6.3	-0.1	104	354	75	72
173	25.266	0.148	0.050	2.16	99	-0.02	103	6.3	0.0	104	355	75	72
174	25.412	0.146	0.053	2.14	99	-0.07	98	6.3	0.0	104	354	75	72
175	25.561	0.149	0.055	2.15	99	-2.58	99	6.2	-0.1	104	356	75	72
176	25.706	0.145	0.055	2.15	99	-0.98	96	6.1	-0.1	104	359	75	72
177	25.855	0.149	0.055	2.17	99	-0.81	99	6.1	0.0	105	362	75	71
178	26.000	0.145	0.050	2.17	99	-1.33	101	6.0	-0.1	105	363	75	71
179	26.149	0.149	0.051	2.15	99	-0.04	102	6.0	0.0	105	362	75	71
180	26.294	0.145	0.050	2.17	99	0	101	5.9	-0.1	105	357	75	71
181	26.443	0.149	0.051	2.16	99	0	102	5.9	0.0	105	358	75	71
182	26.588	0.145	0.053	2.18	99	-2.65	98	5.8	-0.1	105	359	75	71
183	26.737	0.149	0.051	2.14	99	-2.66	102	5.8	0.0	105	354	75	71
184	26.882	0.145	0.050	2.16	100	0	101	5.8	0.0	105	345	75	71
185	27.031	0.149	0.049	2.17	100	0	104	5.7	-0.1	104	335	75	71
186	27.175	0.144	0.054	2.15	99	-1.51	96	5.7	0.0	104	327	75	71
187	27.325	0.150	0.048	2.17	99	-2.64	106	5.7	0.0	104	319	75	71
188	27.469	0.144	0.051	2.16	99	-1.19	99	5.6	-0.1	103	310	75	71
189	27.619	0.150	0.051	2.14	99	-0.76	103	5.6	0.0	103	303	75	71
190	27.764	0.145	0.053	2.14	99	-1.53	98	5.5	-0.1	102	298	75	71
191	27.914	0.150	0.052	2.16	99	-0.83	102	5.6	0.1	102	293	75	71
192	28.058	0.144	0.055	2.17	99	-0.6	95	5.5	-0.1	101	286	75	71
193	28.208	0.150	0.049	2.14	99	-2.17	105	5.5	0.0	101	283	75	71
194	28.352	0.144	0.053	2.13	99	-0.63	97	5.5	0.0	101	279	75	71
195	28.502	0.150	0.050	2.15	100	-0.41	104	5.4	-0.1	100	273	75	71
196	28.646	0.144	0.051	2.15	100	-1.06	98	5.4	0.0	100	268	75	71
197	28.795	0.149	0.058	2.15	100	-0.04	95	5.4	0.0	100	265	75	72

BOX A TEST DATA - ASTM E2779 / ASTM E2515

Client: Hearth & Home Technologies
Model: P35i-C
Run #: 1

Job #: 19-531
Tracking #: 0046
Technician: SJB
Date: 11/13/2019

	Particulate Sampling Data							Fuel Weight (lb)		Temperature Data (°F)			
Elapsed Time (min)	Gas Meter (ft^3)	Sample Rate (cfm)	Dilution Tunnel dP (in H_2O)	Orifice dH (in H_2O)	Meter Temp (°F)	Meter Vacuum (in Hg)	Pro. Rate (%)	Scale Reading	Weight Change	Dilution Tunnel	Flue	Filter	Ambient
198	28.939	0.144	0.054	2.15	100	0	96	5.4	0.0	99	262	75	71
199	29.090	0.151	0.054	2.14	100	-2.72	100	5.3	-0.1	99	265	75	71
200	29.233	0.143	0.050	2.16	100	-0.28	99	5.3	0.0	99	265	75	71
201	29.384	0.151	0.058	2.15	100	-2.53	97	5.3	0.0	99	263	75	71
202	29.527	0.143	0.055	2.14	100	0	94	5.3	0.0	99	266	75	72
203	29.678	0.151	0.051	2.16	100	-0.09	103	5.2	-0.1	99	266	75	71
204	29.822	0.144	0.049	2.16	100	0	100	5.2	0.0	99	268	75	72
205	29.973	0.151	0.048	2.17	100	-2.46	106	5.1	-0.1	99	272	75	72
206	30.117	0.144	0.051	2.16	100	0	98	5.1	0.0	99	273	75	72
207	30.268	0.151	0.049	2.15	100	-2.58	105	5.1	0.0	99	279	75	72
208	30.411	0.143	0.057	2.14	100	-2.67	92	5.0	-0.1	100	286	75	72
209	30.561	0.150	0.053	2.16	100	-0.82	101	5.0	0.0	100	290	75	72
210	30.706	0.145	0.051	2.15	100	0	99	4.9	-0.1	100	295	75	72
211	30.856	0.150	0.052	2.15	100	0	102	4.9	0.0	101	296	75	72
212	31.000	0.144	0.056	2.13	100	-0.2	94	4.8	-0.1	101	294	75	72
213	31.150	0.150	0.051	2.15	100	-2.51	103	4.7	-0.1	101	288	75	72
214	31.294	0.144	0.053	2.14	100	-2.49	97	4.8	0.1	101	280	75	72
215	31.444	0.150	0.052	2.14	100	-2.52	102	4.8	0.0	101	280	75	72
216	31.589	0.145	0.054	2.14	100	-0.42	96	4.7	-0.1	101	277	75	72
217	31.739	0.150	0.053	2.15	100	-2.6	101	4.7	0.0	100	274	75	72
218	31.883	0.144	0.055	2.14	100	-1.66	95	4.7	0.0	100	272	75	72
219	32.033	0.150	0.051	2.15	100	-0.15	103	4.7	0.0	100	273	75	72
220	32.178	0.145	0.052	2.16	100	-2.42	98	4.6	-0.1	100	277	75	72
221	32.328	0.150	0.048	2.17	100	-2.58	106	4.6	0.0	100	280	75	72
222	32.473	0.145	0.051	2.17	101	-2.4	99	4.5	-0.1	101	281	75	72
223	32.623	0.150	0.050	2.18	101	-2.07	103	4.5	0.0	100	280	75	72
224	32.768	0.145	0.050	2.16	101	0	100	4.5	0.0	101	283	75	72
225	32.917	0.149	0.049	2.16	101	-1.43	104	4.5	0.0	101	279	75	72
226	33.062	0.145	0.054	2.14	101	-0.32	96	4.4	-0.1	101	278	75	72
227	33.211	0.149	0.053	2.17	101	-0.92	100	4.4	0.0	101	277	75	72
228	33.356	0.145	0.055	2.14	101	-0.08	95	4.4	0.0	101	278	75	72
229	33.505	0.149	0.053	2.15	101	-2.58	100	4.3	-0.1	101	285	75	72
230	33.650	0.145	0.055	2.17	101	0	95	4.3	0.0	101	291	75	72

BOX A TEST DATA - ASTM E2779 / ASTM E2515

Client: Hearth & Home Technologies
Model: P35i-C
Run #: 1

Job #: 19-531
Tracking #: 0046
Technician: SJB
Date: 11/13/2019

	Particulate Sampling Data							Fuel Weight (lb)		Temperature Data (°F)			
Elapsed Time (min)	Gas Meter (ft^3)	Sample Rate (cfm)	Dilution Tunnel dP (in H_2O)	Orifice dH (in H_2O)	Meter Temp (°F)	Meter Vacuum (in Hg)	Pro. Rate (%)	Scale Reading	Weight Change	Dilution Tunnel	Flue	Filter	Ambient
231	33.798	0.148	0.057	2.15	101	-1.31	96	4.2	-0.1	101	289	75	72
232	33.944	0.146	0.055	2.15	101	-0.06	96	4.2	0.0	101	283	75	72
233	34.092	0.148	0.055	2.14	101	-2.23	97	4.2	0.0	101	283	75	72
234	34.238	0.146	0.049	2.14	101	0	102	4.1	-0.1	101	287	76	73
235	34.386	0.148	0.051	2.12	101	-2.75	101	4.1	0.0	101	287	75	73
236	34.532	0.146	0.053	2.11	101	-2.68	98	4.1	0.0	101	283	75	73
237	34.680	0.148	0.053	2.16	101	-0.48	99	4.0	-0.1	101	280	76	73
238	34.826	0.146	0.053	2.14	101	-2.71	98	4.0	0.0	101	277	75	73
239	34.974	0.148	0.057	2.14	101	-0.83	96	4.0	0.0	101	273	76	73
240	35.120	0.146	0.055	2.13	101	0	96	3.9	-0.1	101	276	76	73
241	35.268	0.148	0.054	2.14	101	-1.33	98	3.8	-0.1	100	274	76	73
242	35.414	0.146	0.051	2.13	101	-2.46	100	3.9	0.1	100	267	76	73
243	35.562	0.148	0.053	2.13	101	-0.26	99	3.8	-0.1	100	265	76	73
244	35.708	0.146	0.051	2.15	101	-1.27	100	3.8	0.0	100	265	76	73
245	35.856	0.148	0.053	2.15	101	-2.56	99	3.8	0.0	100	266	76	73
246	36.002	0.146	0.049	2.14	101	-0.46	102	3.8	0.0	100	263	76	73
247	36.150	0.148	0.051	2.15	101	-1.62	101	3.7	-0.1	100	260	76	73
248	36.296	0.146	0.054	2.12	101	-0.27	97	3.7	0.0	99	262	76	73
249	36.444	0.148	0.056	2.14	101	-0.49	96	3.7	0.0	99	265	76	73
250	36.591	0.147	0.051	2.14	102	-0.58	100	3.6	-0.1	99	265	76	73
251	36.738	0.147	0.054	2.12	102	0	97	3.6	0.0	100	272	76	73
252	36.886	0.148	0.053	2.14	102	-2.58	99	3.6	0.0	100	275	76	73
253	37.033	0.147	0.056	2.15	102	0	96	3.5	-0.1	100	278	76	73
254	37.180	0.147	0.052	2.16	102	-2.18	99	3.5	0.0	100	285	76	73
255	37.327	0.147	0.055	2.15	102	-2.43	96	3.5	0.0	100	285	76	73
256	37.475	0.148	0.053	2.14	102	0	99	3.4	-0.1	101	288	76	73
257	37.621	0.146	0.053	2.15	102	-1.58	98	3.4	0.0	101	288	76	73
258	37.769	0.148	0.056	2.14	102	-2.57	96	3.4	0.0	101	285	76	73
259	37.916	0.147	0.056	2.14	102	-1.63	96	3.3	-0.1	101	283	76	73
260	38.064	0.148	0.054	2.14	102	-1.26	98	3.3	0.0	101	283	76	73
261	38.210	0.146	0.055	2.15	102	-2.25	96	3.4	0.1	101	280	76	73
262	38.358	0.148	0.050	2.13	102	-2	102	3.2	-0.2	100	276	76	73
263	38.504	0.146	0.049	2.17	102	-0.84	101	3.2	0.0	100	279	76	73

BOX A TEST DATA - ASTM E2779 / ASTM E2515

Client: Hearth & Home Technologies
Model: P35i-C
Run #: 1

Job #: 19-531
Tracking #: 0046
Technician: SJB
Date: 11/13/2019

	Particulate Sampling Data							Fuel Weight (lb)		Temperature Data (°F)			
Elapsed Time (min)	Gas Meter (ft^3)	Sample Rate (cfm)	Dilution Tunnel dP (in H_2O)	Orifice dH (in H_2O)	Meter Temp (°F)	Meter Vacuum (in Hg)	Pro. Rate (%)	Scale Reading	Weight Change	Dilution Tunnel	Flue	Filter	Ambient
264	38.653	0.149	0.053	2.14	102	0	100	3.2	0.0	100	282	76	73
265	38.799	0.146	0.051	2.15	102	-1.42	99	3.1	-0.1	100	282	76	73
266	38.947	0.148	0.055	2.14	102	-2.11	97	3.1	0.0	100	281	76	73
267	39.093	0.146	0.055	2.13	102	-2.57	96	3.1	0.0	100	279	76	73
268	39.242	0.149	0.049	2.13	102	0	104	3.0	-0.1	100	275	76	73
269	39.387	0.145	0.051	2.11	102	-1.76	99	3.0	0.0	100	276	76	73
270	39.536	0.149	0.047	2.15	102	-2.27	106	3.0	0.0	100	274	76	73
271	39.682	0.146	0.052	2.15	102	-1.77	98	2.9	-0.1	100	275	76	73
272	39.831	0.149	0.053	2.15	102	-0.96	100	2.9	0.0	100	278	76	73
273	39.975	0.144	0.053	2.14	102	-1.74	96	2.8	-0.1	100	283	76	73
274	40.125	0.150	0.051	2.14	102	0	102	2.8	0.0	100	285	76	73
275	40.269	0.144	0.052	2.17	102	-1.76	97	2.8	0.0	100	287	76	73
276	40.419	0.150	0.055	2.15	102	-2.48	98	2.8	0.0	100	283	76	73
277	40.563	0.144	0.058	2.14	102	-0.29	92	2.7	-0.1	100	279	76	73
278	40.713	0.150	0.053	2.14	102	-1.3	100	2.7	0.0	100	280	76	73
279	40.857	0.144	0.048	2.14	102	-1.02	101	2.7	0.0	100	279	76	73
280	41.007	0.150	0.050	2.15	102	-1.44	103	2.7	0.0	100	280	76	73
281	41.151	0.144	0.058	2.14	102	-0.32	92	2.6	-0.1	100	284	76	73
282	41.301	0.150	0.055	2.13	102	0	98	2.5	-0.1	100	286	76	73
283	41.445	0.144	0.049	2.13	102	-2.3	100	2.5	0.0	100	283	76	73
284	41.595	0.150	0.052	2.12	102	-1.53	101	2.5	0.0	100	277	76	73
285	41.740	0.145	0.054	2.15	102	-2.49	96	2.5	0.0	100	272	76	73
286	41.889	0.149	0.051	2.15	102	0	101	2.4	-0.1	100	268	76	73
287	42.034	0.145	0.052	2.14	102	0	98	2.4	0.0	100	271	76	73
288	42.183	0.149	0.053	2.13	102	-0.98	100	2.4	0.0	100	275	76	73
289	42.328	0.145	0.051	2.15	102	-1.95	99	2.3	-0.1	100	276	76	73
290	42.477	0.149	0.051	2.15	102	-0.97	101	2.3	0.0	100	275	76	73
291	42.622	0.145	0.051	2.13	102	-0.86	99	2.3	0.0	100	275	76	73
292	42.772	0.150	0.047	2.14	103	-0.05	106	2.2	-0.1	100	277	76	73
293	42.916	0.144	0.055	2.15	103	0	94	2.2	0.0	100	280	76	73
294	43.066	0.150	0.054	2.13	103	0	99	2.2	0.0	100	286	76	73
295	43.210	0.144	0.050	2.13	103	-2.35	99	2.1	-0.1	100	286	76	73
296	43.361	0.151	0.054	2.14	103	-0.06	100	2.1	0.0	100	284	76	73

BOX A TEST DATA - ASTM E2779 / ASTM E2515

Client: Hearth & Home Technologies
Model: P35i-C
Run #: 1

Job #: 19-531
Tracking #: 0046
Technician: SJB
Date: 11/13/2019

	Particulate Sampling Data							Fuel Weight (lb)		Temperature Data (°F)			
Elapsed Time (min)	Gas Meter (ft^3)	Sample Rate (cfm)	Dilution Tunnel dP (in H_2O)	Orifice dH (in H_2O)	Meter Temp (°F)	Meter Vacuum (in Hg)	Pro. Rate (%)	Scale Reading	Weight Change	Dilution Tunnel	Flue	Filter	Ambient
297	43.505	0.144	0.054	2.09	103	0	95	2.0	-0.1	100	286	76	73
298	43.655	0.150	0.052	2.14	103	-1.89	101	2.0	0.0	100	288	76	73
299	43.799	0.144	0.051	2.15	103	0	98	2.0	0.0	101	288	76	73
300	43.950	0.151	0.054	2.16	103	-1.19	100	1.9	-0.1	101	287	76	73
301	44.094	0.144	0.056	2.12	103	-0.86	93	1.9	0.0	100	279	76	73
302	44.244	0.150	0.052	2.13	103	-1.56	101	1.9	0.0	100	275	76	73
303	44.388	0.144	0.052	2.13	103	-0.75	97	1.9	0.0	100	274	76	73
304	44.538	0.150	0.051	2.12	103	0	102	1.8	-0.1	100	270	76	73
305	44.683	0.145	0.050	2.14	103	-2.19	100	1.8	0.0	100	273	76	73
306	44.833	0.150	0.049	2.13	103	0	104	1.8	0.0	100	282	76	73
307	44.977	0.144	0.053	2.15	103	0	96	1.6	-0.2	100	282	76	73
308	45.127	0.150	0.052	2.13	103	0	101	1.7	0.1	100	281	76	73
309	45.271	0.144	0.052	2.13	103	-0.89	97	1.7	0.0	100	281	76	73
310	45.421	0.150	0.052	2.13	103	-0.7	101	1.6	-0.1	100	284	76	73
311	45.565	0.144	0.050	2.14	103	0	99	1.6	0.0	100	284	76	73
312	45.715	0.150	0.050	2.12	103	-2.53	103	1.5	-0.1	100	285	76	73
313	45.860	0.145	0.050	2.12	103	-0.81	100	1.5	0.0	100	285	76	73
314	46.009	0.149	0.053	2.15	103	-0.47	99	1.6	0.1	100	283	76	73
315	46.154	0.145	0.051	2.13	103	-1.97	99	1.4	-0.2	100	282	76	73
316	46.304	0.150	0.046	2.14	103	-0.74	107	1.4	0.0	100	280	76	73
317	46.448	0.144	0.049	2.13	103	0	100	1.4	0.0	100	275	76	73
318	46.598	0.150	0.049	2.14	103	-0.79	104	1.5	0.1	100	272	76	73
319	46.743	0.145	0.049	2.14	103	-1.71	101	1.2	-0.3	100	270	76	73
320	46.892	0.149	0.055	2.14	103	-0.5	97	1.3	0.1	99	269	76	73
321	47.037	0.145	0.050	2.15	103	-1.75	99	1.3	0.0	99	272	76	73
322	47.186	0.149	0.054	2.14	103	-0.79	98	1.2	-0.1	100	278	76	73
323	47.330	0.144	0.055	2.15	103	-2.24	94	1.2	0.0	100	284	76	73
324	47.479	0.149	0.058	2.12	103	-0.32	95	1.1	-0.1	100	287	76	73
325	47.624	0.145	0.054	2.14	103	0	96	1.1	0.0	100	287	76	73
326	47.773	0.149	0.051	2.15	103	0	101	1.1	0.0	100	285	76	73
327	47.918	0.145	0.048	2.18	103	-2.64	102	1.0	-0.1	100	285	76	73
328	48.067	0.149	0.055	2.16	103	-0.43	98	1.0	0.0	100	281	76	73
329	48.212	0.145	0.052	2.14	103	-2.59	98	1.0	0.0	100	276	76	73

BOX A TEST DATA - ASTM E2779 / ASTM E2515

Client: Hearth & Home Technologies
Model: P35i-C
Run #: 1

Job #: 19-531
Tracking #: 0046
Technician: SJB
Date: 11/13/2019

	Particulate Sampling Data							Fuel Weight (lb)		Temperature Data (°F)			
Elapsed Time (min)	Gas Meter (ft^3)	Sample Rate (cfm)	Dilution Tunnel dP (in H_2O)	Orifice dH (in H_2O)	Meter Temp (°F)	Meter Vacuum (in Hg)	Pro. Rate (%)	Scale Reading	Weight Change	Dilution Tunnel	Flue	Filter	Ambient
330	48.361	0.149	0.054	2.09	103	-1.49	98	0.9	-0.1	100	278	76	73
331	48.506	0.145	0.051	2.11	103	-0.61	99	0.9	0.0	100	279	76	73
332	48.655	0.149	0.052	2.11	103	-2.51	100	0.9	0.0	100	282	76	73
333	48.801	0.146	0.054	2.15	103	-2.43	96	0.8	-0.1	100	286	77	73
334	48.949	0.148	0.055	2.14	103	-0.21	97	0.8	0.0	100	291	77	73
335	49.095	0.146	0.048	2.13	103	0	102	0.8	0.0	101	294	77	73
336	49.243	0.148	0.051	2.13	103	-1.78	101	0.7	-0.1	101	293	76	73
337	49.389	0.146	0.054	2.13	103	-1.32	97	0.7	0.0	101	288	77	73
338	49.537	0.148	0.051	2.16	103	-2.63	101	0.7	0.0	101	284	77	73
339	49.683	0.146	0.051	2.14	103	0	99	0.6	-0.1	101	280	77	73
340	49.830	0.147	0.053	2.11	103	-1.5	98	0.6	0.0	100	279	77	73
341	49.976	0.146	0.054	2.15	103	0	96	0.6	0.0	100	275	77	73
342	50.124	0.148	0.059	2.14	103	-2.46	94	0.5	-0.1	100	273	77	73
343	50.271	0.147	0.053	2.12	103	-0.02	98	0.5	0.0	100	274	77	73
344	50.418	0.147	0.052	2.14	103	-0.07	99	0.5	0.0	100	275	77	73
345	50.564	0.146	0.052	2.14	103	-1.13	98	0.4	-0.1	100	283	77	73
346	50.712	0.148	0.053	2.14	103	-0.62	99	0.4	0.0	100	281	77	73
347	50.859	0.147	0.055	2.15	103	-2.81	96	0.4	0.0	100	276	77	73
348	51.006	0.147	0.057	2.13	103	-1.29	95	0.3	-0.1	100	275	77	73
349	51.153	0.147	0.052	2.12	103	0	99	0.3	0.0	100	276	77	73
350	51.300	0.147	0.053	2.12	103	-1.75	98	0.3	0.0	100	276	77	73
351	51.447	0.147	0.050	2.11	103	0	101	0.3	0.0	100	273	77	73
352	51.594	0.147	0.050	2.14	103	-0.03	101	0.2	-0.1	100	274	77	73
353	51.741	0.147	0.052	2.13	103	0	99	0.2	0.0	100	278	77	74
354	51.888	0.147	0.056	2.15	103	-0.54	95	0.1	-0.1	100	284	77	73
355	52.035	0.147	0.053	2.12	103	-2.16	98	0.1	0.0	100	289	77	73
356	52.182	0.147	0.052	2.12	103	-2.01	99	0.1	0.0	100	286	77	73
357	52.329	0.147	0.052	2.11	103	-2.42	99	0.0	-0.1	100	282	77	73
358	52.476	0.147	0.056	2.12	103	-1.36	95	0.0	0.0	100	277	77	73
359	52.623	0.147	0.051	2.12	103	-0.18	100	0.0	0.0	100	277	77	73
360	52.769	0.146	0.050	2.09	103	-0.02	100	0.0	0.0	100	279	77	73
Avg/Tot	52.769	0.147	0.052	2.15	96	-1.19	100			102	333	75	72

BOX B TEST DATA - ASTM E2779 / ASTM E2515

Client: Hearth & Home Technologies
Model: P35i-C
Run #: 1

Job #: 19-531
Tracking #: 0046
Technician: SJB
Date: 11/13/2019

	Particulate Sampling Data							Flue Gas Data		
Elapsed Time (min)	Gas Meter (ft^3)	Sample Rate (cfm)	Orifice dH (in H_2O)	Meter Temp (°F)	Meter Vacuum (in Hg)	Pro. Rate (%)	Filter (°F)	Flue Draft (in H_2O)	CO_2 (%)	CO (%)
0	0.000		0.00	71	-1		70	0.000	9.06	0.00
1	0.126	0.126	2.17	71	-2.45	89	72	-0.060	8.86	0.05
2	0.266	0.140	2.14	71	-1.17	102	72	-0.080	8.28	0.00
3	0.407	0.141	2.15	71	-0.48	104	72	-0.110	9.01	0.02
4	0.550	0.143	2.14	71	-1.5	96	73	-0.060	9.93	0.03
5	0.689	0.139	2.14	72	-1.88	101	73	-0.040	9.94	0.02
6	0.835	0.146	2.25	72	-2.65	102	73	-0.080	9.09	0.00
7	0.977	0.142	2.24	72	-1.46	99	73	-0.080	8.73	0.00
8	1.124	0.147	2.24	72	-1.48	109	74	-0.140	8.82	0.00
9	1.265	0.141	2.25	73	-0.45	100	74	-0.060	9.00	0.00
10	1.412	0.147	2.23	73	-2.26	105	74	-0.080	8.46	0.02
11	1.554	0.142	2.23	73	-1.44	106	74	-0.090	8.15	0.03
12	1.701	0.147	2.25	73	-2.54	104	74	-0.090	8.05	0.02
13	1.844	0.143	2.23	74	-0.87	103	74	-0.070	8.23	0.00
14	1.990	0.146	2.23	74	-0.55	102	74	-0.080	8.78	0.07
15	2.133	0.143	2.25	74	-2.92	98	74	-0.060	8.94	0.03
16	2.277	0.144	2.23	75	-2.78	110	75	-0.070	8.88	0.01
17	2.421	0.144	2.23	75	-2.81	100	75	-0.080	8.85	0.01
18	2.564	0.143	2.22	75	-3.07	104	75	-0.080	7.80	0.00
19	2.709	0.145	2.24	76	-2.11	103	75	-0.090	7.11	0.00
20	2.853	0.144	2.23	76	-1.76	105	75	-0.050	6.82	0.00
21	2.999	0.146	2.23	77	-2.01	105	75	-0.060	6.41	0.04
22	3.141	0.142	2.21	77	-0.69	99	75	-0.090	7.00	0.06
23	3.288	0.147	2.22	77	-1.06	109	75	-0.090	6.83	0.00
24	3.431	0.143	2.25	78	-2.25	98	75	-0.090	9.33	0.03
25	3.578	0.147	2.22	78	-1.11	103	75	-0.070	9.10	0.00
26	3.720	0.142	2.23	79	-2.07	102	75	-0.080	9.07	0.00
27	3.867	0.147	2.23	79	-0.69	105	76	-0.080	10.00	0.03
28	4.008	0.141	2.22	79	-1.75	102	76	-0.020	11.85	0.17
29	4.155	0.147	2.22	80	-1.81	100	76	-0.030	9.95	0.03
30	4.296	0.141	2.20	80	-0.52	100	76	-0.050	9.27	0.01
31	4.444	0.148	2.21	81	-2.47	107	76	-0.080	8.84	0.00

BOX B TEST DATA - ASTM E2779 / ASTM E2515

Client: Hearth & Home Technologies
Model: P35i-C
Run #: 1

Job #: 19-531
Tracking #: 0046
Technician: SJB
Date: 11/13/2019

	Particulate Sampling Data							Flue Gas Data		
Elapsed Time (min)	Gas Meter (ft^3)	Sample Rate (cfm)	Orifice dH (in H_2O)	Meter Temp (°F)	Meter Vacuum (in Hg)	Pro. Rate (%)	Filter (°F)	Flue Draft (in H_2O)	CO_2 (%)	CO (%)
32	4.587	0.143	2.22	81	-2.77	99	76	-0.070	9.92	0.00
33	4.733	0.146	2.20	81	-2.07	105	76	-0.060	9.28	0.01
34	4.876	0.143	2.23	82	-0.61	101	76	-0.080	7.23	0.05
35	5.023	0.147	2.23	82	-0.56	110	76	-0.090	6.98	0.02
36	5.167	0.144	2.20	82	-1.86	105	76	-0.070	7.84	0.00
37	5.313	0.146	2.20	83	-2.96	104	76	-0.060	6.94	0.00
38	5.457	0.144	2.21	83	-0.75	102	76	-0.060	7.25	0.00
39	5.602	0.145	2.20	84	-1.65	105	76	-0.050	8.21	0.00
40	5.747	0.145	2.20	84	-3.04	103	76	-0.070	8.59	0.02
41	5.892	0.145	2.20	84	-0.58	105	76	-0.110	8.67	0.00
42	6.037	0.145	2.21	85	-3.03	98	76	-0.050	8.95	0.00
43	6.181	0.144	2.21	85	-0.35	100	76	-0.070	7.54	0.00
44	6.327	0.146	2.22	85	-0.41	105	77	-0.080	8.75	0.04
45	6.471	0.144	2.20	86	-2.74	100	77	-0.060	9.24	0.01
46	6.618	0.147	2.20	86	-2.71	101	77	-0.070	9.45	0.01
47	6.762	0.144	2.20	86	-1.6	103	77	-0.080	9.57	0.00
48	6.909	0.147	2.22	87	-0.96	104	77	-0.090	8.87	0.01
49	7.052	0.143	2.19	87	-0.67	98	77	-0.100	8.98	0.00
50	7.200	0.148	2.21	87	-0.96	105	77	-0.090	7.29	0.00
51	7.343	0.143	2.20	88	-0.61	101	77	-0.070	7.68	0.00
52	7.491	0.148	2.21	88	-0.45	103	77	-0.060	8.36	0.00
53	7.635	0.144	2.20	88	-1.33	99	77	-0.060	8.04	0.00
54	7.783	0.148	2.22	88	-2.46	101	77	-0.090	7.32	0.00
55	7.926	0.143	2.20	89	-0.41	100	77	-0.100	7.12	0.03
56	8.074	0.148	2.22	89	-2.98	100	77	-0.060	7.91	0.00
57	8.217	0.143	2.20	89	-3.01	101	77	-0.100	8.72	0.00
58	8.365	0.148	2.20	90	-2.52	102	77	-0.110	9.76	0.10
59	8.508	0.143	2.22	90	-0.43	104	77	-0.090	8.89	0.03
60	8.657	0.149	2.20	90	-2.19	101	77	-0.070	8.36	0.00
61	8.800	0.143	2.20	90	-1.89	103	77	-0.060	7.95	0.00
62	8.948	0.148	2.18	91	-1.47	106	77	-0.050	6.03	0.03
63	9.091	0.143	2.21	91	-0.53	100	77	-0.060	4.72	0.00

BOX B TEST DATA - ASTM E2779 / ASTM E2515

Client: Hearth & Home Technologies
Model: P35i-C
Run #: 1

Job #: 19-531
Tracking #: 0046
Technician: SJB
Date: 11/13/2019

	Particulate Sampling Data							Flue Gas Data		
Elapsed Time (min)	Gas Meter (ft^3)	Sample Rate (cfm)	Orifice dH (in H_2O)	Meter Temp (°F)	Meter Vacuum (in Hg)	Pro. Rate (%)	Filter (°F)	Flue Draft (in H_2O)	CO_2 (%)	CO (%)
64	9.239	0.148	2.20	91	-1.67	106	77	-0.090	3.41	0.00
65	9.383	0.144	2.20	91	-2.97	102	77	-0.100	2.60	0.03
66	9.531	0.148	2.19	91	-0.94	102	77	-0.040	3.00	0.03
67	9.674	0.143	2.20	92	-2.99	95	77	-0.060	2.99	0.00
68	9.823	0.149	2.17	92	-1.43	101	77	-0.030	3.10	0.03
69	9.967	0.144	2.18	92	-2.45	105	77	-0.060	3.11	0.01
70	10.115	0.148	2.20	92	-2.95	95	77	-0.090	3.00	0.01
71	10.259	0.144	2.20	92	-2.47	102	77	-0.050	3.77	0.02
72	10.407	0.148	2.19	93	-3.02	102	77	-0.070	4.37	0.04
73	10.551	0.144	2.21	93	-2.22	99	77	-0.080	4.83	0.00
74	10.700	0.149	2.21	93	-2.58	109	77	-0.060	4.40	0.00
75	10.844	0.144	2.18	93	-0.52	101	77	-0.090	4.27	0.02
76	10.992	0.148	2.20	93	-1	97	77	-0.030	4.92	0.00
77	11.136	0.144	2.18	94	-2.41	101	77	-0.090	4.56	0.03
78	11.285	0.149	2.19	94	-0.86	104	77	-0.070	4.57	0.02
79	11.429	0.144	2.19	94	-1.02	98	77	-0.050	4.04	0.02
80	11.577	0.148	2.20	94	-0.43	103	77	-0.060	4.35	0.05
81	11.722	0.145	2.21	94	-0.82	95	77	-0.090	4.90	0.00
82	11.870	0.148	2.21	94	-0.82	105	77	-0.050	3.86	0.03
83	12.014	0.144	2.21	95	-1.04	95	77	-0.080	4.61	0.03
84	12.163	0.149	2.20	95	-1.36	100	77	-0.060	4.19	0.02
85	12.307	0.144	2.18	95	-2.43	102	77	-0.070	4.04	0.01
86	12.455	0.148	2.18	95	-2.99	101	77	-0.040	3.89	0.01
87	12.600	0.145	2.18	95	-2.96	99	77	-0.090	4.54	0.02
88	12.748	0.148	2.19	96	-1.35	102	77	-0.040	4.92	0.04
89	12.892	0.144	2.18	96	-0.73	99	77	-0.060	4.02	0.02
90	13.041	0.149	2.19	96	-0.64	101	77	-0.110	4.61	0.02
91	13.185	0.144	2.18	96	-1.14	98	77	-0.070	5.10	0.04
92	13.333	0.148	2.20	96	-0.59	104	77	-0.100	4.05	0.05
93	13.478	0.145	2.20	96	-2.13	98	77	-0.070	3.64	0.01
94	13.627	0.149	2.21	96	-0.64	100	77	-0.120	4.49	0.00
95	13.772	0.145	2.19	96	-1.63	97	77	-0.080	3.77	0.01

BOX B TEST DATA - ASTM E2779 / ASTM E2515

Client: Hearth & Home Technologies
Model: P35i-C
Run #: 1

Job #: 19-531
Tracking #: 0046
Technician: SJB
Date: 11/13/2019

	Particulate Sampling Data							Flue Gas Data		
Elapsed Time (min)	Gas Meter (ft^3)	Sample Rate (cfm)	Orifice dH (in H_2O)	Meter Temp (°F)	Meter Vacuum (in Hg)	Pro. Rate (%)	Filter (°F)	Flue Draft (in H_2O)	CO_2 (%)	CO (%)
96	13.920	0.148	2.22	96	-2.63	104	77	-0.090	4.81	0.04
97	14.065	0.145	2.22	97	-1.97	103	77	-0.090	4.57	0.06
98	14.213	0.148	2.20	97	-2.48	99	77	-0.020	4.02	0.00
99	14.358	0.145	2.19	97	-0.52	99	77	-0.060	4.14	0.01
100	14.505	0.147	2.21	97	-1.61	102	77	-0.060	4.45	0.04
101	14.651	0.146	2.19	97	-3.09	101	77	-0.070	3.75	0.01
102	14.799	0.148	2.19	97	-2.71	104	77	-0.050	4.18	0.03
103	14.944	0.145	2.20	97	-2.05	100	77	-0.060	4.84	0.00
104	15.093	0.149	2.20	97	-0.46	105	77	-0.070	4.60	0.03
105	15.238	0.145	2.19	98	-1.7	102	77	-0.050	4.59	0.01
106	15.386	0.148	2.20	98	-0.81	99	77	-0.060	4.51	0.04
107	15.531	0.145	2.21	98	-2.35	103	77	-0.070	4.38	0.00
108	15.679	0.148	2.21	98	-0.63	103	77	-0.060	4.54	0.01
109	15.824	0.145	2.20	98	-0.72	97	77	-0.060	4.16	0.03
110	15.973	0.149	2.19	98	-2.74	104	77	-0.080	4.73	0.00
111	16.118	0.145	2.21	98	-0.75	95	77	-0.110	4.25	0.00
112	16.266	0.148	2.19	98	-0.57	99	77	-0.060	3.93	0.02
113	16.411	0.145	2.19	98	-1.54	101	77	-0.100	3.81	0.04
114	16.559	0.148	2.20	98	-2.69	102	77	-0.050	4.13	0.00
115	16.704	0.145	2.20	98	-2.99	99	77	-0.060	4.51	0.01
116	16.853	0.149	2.19	98	-1.44	103	77	-0.080	4.57	0.00
117	16.998	0.145	2.19	99	-0.55	99	77	-0.070	4.40	0.02
118	17.146	0.148	2.21	99	-2.95	102	77	-0.090	5.66	0.00
119	17.291	0.145	2.21	99	-1.29	102	77	-0.070	4.80	0.03
120	17.439	0.148	2.19	99	-1.48	101	77	-0.070	4.67	0.01
121	17.584	0.145	2.18	99	-0.99	98	77	-0.050	4.74	0.01
122	17.733	0.149	2.19	99	-2.15	102	77	-0.050	4.62	0.03
123	17.878	0.145	2.20	99	-3	95	77	-0.060	4.93	0.02
124	18.027	0.149	2.18	99	-1.34	102	77	-0.100	4.84	0.01
125	18.172	0.145	2.20	99	-2.96	98	77	-0.030	4.18	0.00
126	18.321	0.149	2.19	99	-0.62	106	77	-0.060	3.81	0.00
127	18.466	0.145	2.18	99	-1.87	97	77	-0.080	4.96	0.00

BOX B TEST DATA - ASTM E2779 / ASTM E2515

Client: Hearth & Home Technologies
Model: P35i-C
Run #: 1

Job #: 19-531
Tracking #: 0046
Technician: SJB
Date: 11/13/2019

	Particulate Sampling Data							Flue Gas Data		
Elapsed Time (min)	Gas Meter (ft^3)	Sample Rate (cfm)	Orifice dH (in H_2O)	Meter Temp (°F)	Meter Vacuum (in Hg)	Pro. Rate (%)	Filter (°F)	Flue Draft (in H_2O)	CO_2 (%)	CO (%)
128	18.614	0.148	2.20	99	-2.46	97	77	-0.070	3.95	0.02
129	18.759	0.145	2.20	99	-0.55	98	77	-0.070	4.24	0.00
130	18.908	0.149	2.21	99	-2.15	106	77	-0.050	4.60	0.02
131	19.053	0.145	2.20	99	-3.06	99	77	-0.080	4.42	0.01
132	19.202	0.149	2.20	100	-0.92	98	77	-0.090	4.88	0.02
133	19.347	0.145	2.19	99	-2.35	104	77	-0.050	4.98	0.00
134	19.496	0.149	2.17	100	-2	103	77	-0.060	4.86	0.00
135	19.641	0.145	2.19	100	-0.84	99	77	-0.050	4.98	0.00
136	19.789	0.148	2.20	100	-3.13	102	77	-0.030	5.15	0.00
137	19.934	0.145	2.21	100	-0.49	101	77	-0.070	4.61	0.04
138	20.083	0.149	2.19	100	-0.43	104	77	-0.030	4.17	0.00
139	20.228	0.145	2.19	100	-2.96	99	77	-0.070	4.21	0.04
140	20.377	0.149	2.18	100	-3.12	104	77	-0.060	4.64	0.04
141	20.522	0.145	2.20	100	-1.1	96	77	-0.100	4.64	0.03
142	20.671	0.149	2.19	100	-2.26	104	77	-0.070	4.41	0.03
143	20.815	0.144	2.17	100	-0.87	96	77	-0.060	4.18	0.00
144	20.964	0.149	2.18	100	-2.74	106	77	-0.100	3.81	0.02
145	21.109	0.145	2.17	100	-2.91	97	77	-0.050	4.39	0.04
146	21.258	0.149	2.17	100	-1.93	107	77	-0.050	4.67	0.00
147	21.403	0.145	2.19	100	-2.98	102	77	-0.030	5.33	0.01
148	21.552	0.149	2.21	100	-0.66	101	77	-0.080	4.68	0.02
149	21.697	0.145	2.19	100	-1.26	99	77	-0.050	4.68	0.01
150	21.846	0.149	2.17	100	-0.9	104	77	-0.050	4.61	0.00
151	21.990	0.144	2.18	100	-2.93	98	77	-0.070	4.75	0.00
152	22.140	0.150	2.19	100	-0.47	99	77	-0.030	4.52	0.00
153	22.285	0.145	2.18	100	-0.7	99	77	-0.060	4.61	0.00
154	22.434	0.149	2.18	100	-2.76	97	77	-0.070	4.52	0.00
155	22.579	0.145	2.20	100	-0.41	101	77	-0.060	4.57	0.01
156	22.728	0.149	2.17	100	-0.46	99	78	-0.070	4.45	0.05
157	22.872	0.144	2.21	100	-1.5	98	78	-0.070	4.49	0.03
158	23.022	0.150	2.19	100	-0.68	101	77	-0.060	4.18	0.00
159	23.166	0.144	2.17	100	-0.71	101	77	-0.040	4.11	0.00

BOX B TEST DATA - ASTM E2779 / ASTM E2515

Client: Hearth & Home Technologies
Model: P35i-C
Run #: 1

Job #: 19-531
Tracking #: 0046
Technician: SJB
Date: 11/13/2019

	Particulate Sampling Data							Flue Gas Data		
Elapsed Time (min)	Gas Meter (ft^3)	Sample Rate (cfm)	Orifice dH (in H_2O)	Meter Temp (°F)	Meter Vacuum (in Hg)	Pro. Rate (%)	Filter (°F)	Flue Draft (in H_2O)	CO_2 (%)	CO (%)
160	23.316	0.150	2.19	100	-3.15	102	77	-0.090	4.39	0.00
161	23.460	0.144	2.17	101	-0.97	94	77	-0.040	4.49	0.00
162	23.609	0.149	2.20	101	-0.81	100	77	-0.060	5.47	0.05
163	23.754	0.145	2.21	101	-1.96	104	77	-0.070	5.26	0.03
164	23.903	0.149	2.19	101	-0.5	99	77	-0.120	4.15	0.00
165	24.048	0.145	2.18	101	-0.54	99	78	-0.060	4.21	0.00
166	24.197	0.149	2.18	101	-1.95	99	78	0.000	4.64	0.00
167	24.342	0.145	2.17	101	-2.32	99	78	-0.080	3.98	0.00
168	24.491	0.149	2.19	101	-1.17	103	78	-0.120	4.87	0.00
169	24.635	0.144	2.20	101	-2.82	94	77	-0.050	4.25	0.03
170	24.785	0.150	2.19	101	-3.07	106	78	-0.050	4.18	0.02
171	24.929	0.144	2.19	101	-1.39	100	78	-0.060	4.61	0.01
172	25.078	0.149	2.18	101	-2.8	105	78	-0.060	4.79	0.01
173	25.223	0.145	2.17	101	-0.79	101	78	-0.110	4.60	0.00
174	25.372	0.149	2.17	101	-0.92	100	78	-0.020	4.25	0.02
175	25.516	0.144	2.21	101	-0.55	95	78	-0.070	4.86	0.00
176	25.665	0.149	2.18	101	-2.42	99	78	-0.090	4.85	0.00
177	25.810	0.145	2.18	101	-0.74	96	78	-0.070	5.38	0.00
178	25.959	0.149	2.18	101	-0.51	104	78	-0.100	5.09	0.01
179	26.103	0.144	2.19	101	-2.8	99	78	-0.050	4.95	0.05
180	26.253	0.150	2.17	101	-2.9	104	78	0.000	4.01	0.00
181	26.397	0.144	2.19	101	-2.98	99	78	-0.070	4.68	0.01
182	26.547	0.150	2.19	101	-0.46	101	78	-0.100	5.22	0.00
183	26.691	0.144	2.17	101	-2.77	99	78	-0.040	3.96	0.00
184	26.840	0.149	2.18	101	-2.39	104	78	-0.060	3.68	0.01
185	26.985	0.145	2.19	101	-0.44	102	78	-0.040	2.75	0.03
186	27.134	0.149	2.17	101	-0.97	100	77	-0.070	2.65	0.00
187	27.279	0.145	2.17	101	-2.37	103	77	-0.040	2.35	0.00
188	27.428	0.149	2.16	101	-2.34	102	77	-0.040	2.40	0.01
189	27.573	0.145	2.18	101	-0.59	100	77	-0.130	2.14	0.01
190	27.723	0.150	2.19	101	-2.52	101	77	-0.060	2.23	0.02
191	27.867	0.144	2.19	101	-0.94	98	77	-0.060	2.54	0.03

BOX B TEST DATA - ASTM E2779 / ASTM E2515

Client: Hearth & Home Technologies
Model: P35i-C
Run #: 1

Job #: 19-531
Tracking #: 0046
Technician: SJB
Date: 11/13/2019

	Particulate Sampling Data							Flue Gas Data		
Elapsed Time (min)	Gas Meter (ft^3)	Sample Rate (cfm)	Orifice dH (in H_2O)	Meter Temp (°F)	Meter Vacuum (in Hg)	Pro. Rate (%)	Filter (°F)	Flue Draft (in H_2O)	CO_2 (%)	CO (%)
192	28.017	0.150	2.20	101	-1.8	99	77	-0.050	1.98	0.02
193	28.161	0.144	2.19	101	-0.59	101	77	-0.090	2.48	0.03
194	28.310	0.149	2.18	101	-0.55	100	77	-0.090	2.40	0.02
195	28.455	0.145	2.18	101	-1.15	100	77	0.000	1.66	0.05
196	28.604	0.149	2.19	101	-0.71	102	77	-0.080	1.82	0.02
197	28.749	0.145	2.18	101	-2.86	93	77	-0.030	2.25	0.04
198	28.898	0.149	2.19	101	-2	99	77	-0.040	1.96	0.02
199	29.042	0.144	2.18	102	-2.74	96	77	-0.060	2.46	0.00
200	29.191	0.149	2.20	102	-0.63	103	77	-0.020	2.24	0.03
201	29.336	0.145	2.18	102	-2.35	93	77	-0.100	2.11	0.03
202	29.485	0.149	2.18	102	-2.99	98	77	-0.050	2.65	0.00
203	29.630	0.145	2.20	102	-2.85	99	77	-0.100	2.63	0.00
204	29.779	0.149	2.19	102	-3.02	104	77	-0.030	2.53	0.05
205	29.924	0.145	2.18	102	-1.09	102	77	-0.080	2.86	0.03
206	30.073	0.149	2.17	102	-2.82	102	77	-0.050	2.70	0.05
207	30.217	0.144	2.16	102	-1.1	100	77	-0.040	3.08	0.01
208	30.367	0.150	2.18	102	-1.4	97	77	-0.050	3.74	0.00
209	30.512	0.145	2.17	102	-0.85	97	77	-0.110	3.63	0.00
210	30.661	0.149	2.17	102	-0.7	102	77	-0.090	3.48	0.06
211	30.806	0.145	2.17	102	-0.57	98	77	-0.010	3.39	0.02
212	30.955	0.149	2.18	102	-0.84	97	77	-0.080	3.18	0.00
213	31.100	0.145	2.18	102	-2.25	99	77	-0.030	2.65	0.01
214	31.248	0.148	2.20	102	-2.77	99	78	-0.080	2.02	0.02
215	31.394	0.146	2.18	102	-2.61	99	78	-0.020	2.39	0.08
216	31.542	0.148	2.19	102	-0.52	98	78	-0.110	2.38	0.02
217	31.687	0.145	2.17	102	-2.08	97	78	0.010	1.95	0.03
218	31.836	0.149	2.19	102	-0.6	98	78	-0.050	2.22	0.03
219	31.981	0.145	2.16	102	-0.75	99	78	-0.020	2.51	0.03
220	32.130	0.149	2.17	102	-3.12	101	78	-0.040	2.62	0.02
221	32.275	0.145	2.17	102	-3.01	102	78	-0.040	2.83	0.00
222	32.423	0.148	2.19	102	-3.01	101	78	-0.060	2.89	0.03
223	32.569	0.146	2.18	102	-2.81	101	78	-0.040	2.77	0.00

BOX B TEST DATA - ASTM E2779 / ASTM E2515

Client: Hearth & Home Technologies
Model: P35i-C
Run #: 1

Job #: 19-531
Tracking #: 0046
Technician: SJB
Date: 11/13/2019

	Particulate Sampling Data							Flue Gas Data		
Elapsed Time (min)	Gas Meter (ft^3)	Sample Rate (cfm)	Orifice dH (in H_2O)	Meter Temp (°F)	Meter Vacuum (in Hg)	Pro. Rate (%)	Filter (°F)	Flue Draft (in H_2O)	CO_2 (%)	CO (%)
224	32.717	0.148	2.18	102	-1.27	102	78	-0.060	3.27	0.02
225	32.863	0.146	2.17	102	-0.75	102	78	-0.050	2.52	0.00
226	33.011	0.148	2.17	103	-1.18	98	78	-0.080	2.40	0.00
227	33.156	0.145	2.16	103	-1.11	97	78	-0.070	2.60	0.02
228	33.305	0.149	2.16	103	-3	98	78	-0.020	2.74	0.00
229	33.450	0.145	2.16	103	-0.54	97	78	-0.070	2.98	0.04
230	33.598	0.148	2.17	103	-2.9	97	78	-0.030	3.72	0.04
231	33.744	0.146	2.17	103	-2.24	94	78	-0.050	2.96	0.02
232	33.892	0.148	2.16	103	-1.92	97	78	-0.050	2.29	0.01
233	34.038	0.146	2.16	103	-1.46	96	78	-0.060	2.59	0.01
234	34.186	0.148	2.15	103	-3	103	78	-0.080	3.28	0.01
235	34.332	0.146	2.17	103	-0.96	100	78	-0.010	3.22	0.01
236	34.480	0.148	2.15	103	-1.21	99	78	-0.020	2.55	0.00
237	34.627	0.147	2.19	103	-0.77	99	78	-0.060	2.10	0.05
238	34.774	0.147	2.16	103	-1.01	99	78	-0.030	2.58	0.01
239	34.920	0.146	2.17	103	-0.61	94	78	-0.030	1.95	0.00
240	35.068	0.148	2.17	103	-2.61	97	78	-0.070	2.82	0.00
241	35.214	0.146	2.17	103	-1.14	97	78	-0.030	2.49	0.00
242	35.362	0.148	2.17	103	-0.69	101	78	-0.080	2.10	0.00
243	35.508	0.146	2.17	103	-0.79	98	78	0.010	2.18	0.05
244	35.655	0.147	2.18	103	-2.6	100	78	-0.090	2.51	0.01
245	35.802	0.147	2.16	103	-2.82	98	78	0.020	2.38	0.04
246	35.949	0.147	2.17	103	-2.74	102	78	-0.020	2.25	0.03
247	36.096	0.147	2.18	103	-0.59	100	78	-0.080	1.95	0.02
248	36.243	0.147	2.15	103	-2.48	97	78	-0.040	2.28	0.04
249	36.390	0.147	2.17	103	-2.64	96	78	-0.060	2.58	0.01
250	36.537	0.147	2.18	103	-0.76	100	78	-0.060	2.35	0.04
251	36.684	0.147	2.17	103	-0.56	98	78	-0.090	2.81	0.00
252	36.831	0.147	2.15	103	-3.13	98	78	-0.110	2.79	0.02
253	36.978	0.147	2.16	103	-0.85	96	78	-0.010	2.98	0.00
254	37.125	0.147	2.15	103	-0.36	99	78	-0.050	3.77	0.01
255	37.272	0.147	2.17	103	-1.3	97	78	-0.060	2.86	0.00

BOX B TEST DATA - ASTM E2779 / ASTM E2515

Client: Hearth & Home Technologies
Model: P35i-C
Run #: 1

Job #: 19-531
Tracking #: 0046
Technician: SJB
Date: 11/13/2019

	Particulate Sampling Data							Flue Gas Data		
Elapsed Time (min)	Gas Meter (ft^3)	Sample Rate (cfm)	Orifice dH (in H_2O)	Meter Temp (°F)	Meter Vacuum (in Hg)	Pro. Rate (%)	Filter (°F)	Flue Draft (in H_2O)	CO_2 (%)	CO (%)
256	37.418	0.146	2.16	103	-0.55	98	78	-0.040	3.27	0.00
257	37.565	0.147	2.16	103	-0.57	99	78	-0.060	3.17	0.00
258	37.712	0.147	2.14	103	-0.75	96	78	-0.050	2.72	0.00
259	37.859	0.147	2.16	103	-0.46	96	78	-0.060	2.37	0.01
260	38.006	0.147	2.17	103	-1.11	98	78	-0.030	2.75	0.02
261	38.153	0.147	2.19	104	-0.54	97	78	-0.080	2.52	0.01
262	38.300	0.147	2.18	104	-1.62	101	78	-0.090	2.24	0.00
263	38.447	0.147	2.16	104	-1.83	102	78	-0.050	2.72	0.00
264	38.594	0.147	2.15	104	-2.75	98	78	-0.050	2.87	0.00
265	38.742	0.148	2.15	104	-0.89	101	78	-0.030	2.88	0.02
266	38.888	0.146	2.15	104	-2.2	96	78	-0.100	2.73	0.01
267	39.036	0.148	2.17	104	-1.29	97	78	-0.080	2.58	0.01
268	39.182	0.146	2.19	104	-3.01	102	78	-0.080	2.11	0.02
269	39.330	0.148	2.17	104	-2.97	101	78	-0.060	2.70	0.00
270	39.476	0.146	2.19	104	-2.66	104	78	-0.050	2.34	0.00
271	39.624	0.148	2.17	104	-1.78	100	78	-0.090	2.67	0.00
272	39.769	0.145	2.15	104	-0.87	97	78	-0.040	2.90	0.02
273	39.917	0.148	2.18	104	-0.55	99	78	-0.140	3.03	0.02
274	40.063	0.146	2.16	104	-2.45	99	78	-0.040	3.15	0.00
275	40.211	0.148	2.18	104	-2.19	100	78	-0.070	2.81	0.04
276	40.357	0.146	2.16	104	-1.28	96	78	-0.060	2.66	0.02
277	40.505	0.148	2.16	104	-2.56	95	78	-0.080	2.26	0.00
278	40.650	0.145	2.18	104	-0.77	97	78	-0.110	2.75	0.00
279	40.799	0.149	2.17	104	-2.82	105	78	-0.030	2.65	0.00
280	40.944	0.145	2.18	104	-2.6	100	78	0.010	2.77	0.00
281	41.092	0.148	2.18	104	-2.57	95	78	-0.080	3.13	0.00
282	41.238	0.146	2.19	104	-0.59	96	78	-0.090	3.35	0.00
283	41.386	0.148	2.18	104	-2.7	103	78	-0.040	2.88	0.00
284	41.531	0.145	2.19	104	-2.2	98	78	-0.070	2.46	0.04
285	41.680	0.149	2.18	104	-3.07	99	78	-0.090	2.06	0.01
286	41.825	0.145	2.17	104	-1.93	99	78	-0.030	2.18	0.00
287	41.973	0.148	2.16	104	-1.64	100	78	-0.060	2.58	0.01

BOX B TEST DATA - ASTM E2779 / ASTM E2515

Client: Hearth & Home Technologies
Model: P35i-C
Run #: 1

Job #: 19-531
Tracking #: 0046
Technician: SJB
Date: 11/13/2019

	Particulate Sampling Data							Flue Gas Data		
Elapsed Time (min)	Gas Meter (ft^3)	Sample Rate (cfm)	Orifice dH (in H_2O)	Meter Temp (°F)	Meter Vacuum (in Hg)	Pro. Rate (%)	Filter (°F)	Flue Draft (in H_2O)	CO_2 (%)	CO (%)
288	42.119	0.146	2.15	104	-2.52	98	78	-0.060	3.10	0.03
289	42.267	0.148	2.16	104	-0.79	101	78	-0.050	2.57	0.02
290	42.412	0.145	2.16	104	-1.66	99	78	-0.060	2.61	0.00
291	42.561	0.149	2.17	104	-0.65	102	78	-0.080	2.53	0.01
292	42.706	0.145	2.18	104	-2.87	103	78	-0.020	2.75	0.02
293	42.855	0.149	2.18	104	-0.47	98	78	-0.030	2.84	0.01
294	43.000	0.145	2.19	104	-2.27	96	78	-0.020	3.46	0.00
295	43.149	0.149	2.17	104	-2.94	103	78	-0.010	3.08	0.00
296	43.294	0.145	2.14	104	-0.51	96	78	-0.060	2.56	0.03
297	43.443	0.149	2.16	104	-2.96	99	78	-0.040	2.93	0.00
298	43.588	0.145	2.16	104	-1.45	98	78	-0.080	3.29	0.01
299	43.737	0.149	2.17	104	-0.48	102	78	-0.040	2.75	0.01
300	43.881	0.144	2.19	104	-1.69	95	78	-0.060	3.16	0.00
301	44.030	0.149	2.17	104	-2.95	97	78	-0.060	2.00	0.02
302	44.175	0.145	2.16	104	-3.02	98	78	-0.080	2.29	0.00
303	44.324	0.149	2.17	104	-2.35	101	78	-0.060	2.26	0.05
304	44.469	0.145	2.15	104	-1.04	99	78	-0.050	1.90	0.00
305	44.618	0.149	2.16	104	-0.91	103	78	-0.040	2.66	0.04
306	44.762	0.144	2.16	104	-1.8	100	78	-0.050	3.49	0.03
307	44.912	0.150	2.16	104	-0.72	100	78	-0.030	3.07	0.00
308	45.056	0.144	2.15	104	-2.89	97	78	-0.050	2.60	0.03
309	45.206	0.150	2.18	104	-1.13	101	78	-0.020	2.76	0.00
310	45.350	0.144	2.17	104	-0.81	97	78	-0.070	3.03	0.00
311	45.499	0.149	2.15	104	-2.99	103	78	-0.060	2.73	0.00
312	45.644	0.145	2.14	104	-2.49	100	78	-0.060	2.90	0.02
313	45.793	0.149	2.15	104	-0.49	103	78	-0.060	2.74	0.02
314	45.938	0.145	2.16	104	-3.01	97	78	-0.050	2.81	0.01
315	46.087	0.149	2.13	105	-3.15	101	78	-0.060	2.71	0.00
316	46.231	0.144	2.15	105	-1.97	103	78	-0.070	2.75	0.03
317	46.381	0.150	2.16	105	-0.57	104	78	-0.050	1.86	0.02
318	46.525	0.144	2.16	104	-0.64	100	78	-0.040	2.22	0.00
319	46.675	0.150	2.16	105	-1.67	104	78	-0.100	2.19	0.02

BOX B TEST DATA - ASTM E2779 / ASTM E2515

Client: Hearth & Home Technologies
Model: P35i-C
Run #: 1

Job #: 19-531
Tracking #: 0046
Technician: SJB
Date: 11/13/2019

	Particulate Sampling Data							Flue Gas Data		
Elapsed Time (min)	Gas Meter (ft^3)	Sample Rate (cfm)	Orifice dH (in H_2O)	Meter Temp (°F)	Meter Vacuum (in Hg)	Pro. Rate (%)	Filter (°F)	Flue Draft (in H_2O)	CO_2 (%)	CO (%)
320	46.819	0.144	2.17	105	-2.31	94	78	-0.100	2.07	0.00
321	46.969	0.150	2.17	105	-2.96	103	78	-0.060	2.59	0.03
322	47.113	0.144	2.16	105	-2.61	95	78	-0.050	3.16	0.01
323	47.263	0.150	2.18	105	-2.69	98	78	-0.100	3.30	0.02
324	47.407	0.144	2.15	105	-1.88	92	78	-0.110	3.38	0.00
325	47.556	0.149	2.16	105	-1.45	99	78	-0.070	3.04	0.02
326	47.701	0.145	2.16	105	-0.88	99	79	-0.030	2.65	0.02
327	47.850	0.149	2.18	105	-1.17	104	79	-0.100	2.79	0.01
328	47.994	0.144	2.14	105	-0.78	94	79	-0.050	2.69	0.01
329	48.143	0.149	2.16	105	-0.51	100	79	-0.050	1.98	0.06
330	48.288	0.145	2.14	105	-2.21	96	79	-0.060	2.81	0.00
331	48.437	0.149	2.15	105	-2.28	101	79	-0.060	2.83	0.00
332	48.581	0.144	2.15	105	-2.73	97	79	-0.050	2.94	0.00
333	48.731	0.150	2.17	105	-2.38	99	79	-0.040	3.22	0.01
334	48.875	0.144	2.16	105	-0.77	94	79	-0.030	3.45	0.01
335	49.024	0.149	2.15	105	-1.86	105	79	0.020	3.19	0.00
336	49.169	0.145	2.17	105	-0.77	99	79	-0.060	3.22	0.00
337	49.318	0.149	2.15	105	-2.37	99	79	-0.050	2.85	0.00
338	49.462	0.144	2.18	105	-1.15	98	79	-0.060	2.56	0.01
339	49.612	0.150	2.15	105	-1.52	102	79	-0.050	2.31	0.03
340	49.756	0.144	2.15	105	-2.34	96	79	-0.020	2.70	0.01
341	49.906	0.150	2.17	105	-2.98	99	79	-0.080	2.33	0.01
342	50.050	0.144	2.16	105	-2.07	91	79	-0.070	2.22	0.00
343	50.199	0.149	2.18	105	-0.77	99	79	-0.070	2.60	0.00
344	50.343	0.144	2.16	105	-2.78	97	79	-0.050	2.40	0.00
345	50.493	0.150	2.14	105	-0.47	101	79	-0.040	3.73	0.01
346	50.637	0.144	2.15	105	-0.66	96	79	-0.070	2.82	0.01
347	50.786	0.149	2.15	105	-1.19	98	79	-0.050	2.14	0.01
348	50.930	0.144	2.16	105	-1.99	93	79	-0.040	2.79	0.02
349	51.080	0.150	2.16	105	-2.56	101	79	-0.010	2.80	0.03
350	51.224	0.144	2.16	105	-3.03	96	79	-0.050	2.46	0.01
351	51.373	0.149	2.15	105	-2.27	102	79	-0.060	2.38	0.02

BOX B TEST DATA - ASTM E2779 / ASTM E2515

Client: Hearth & Home Technologies
Model: P35i-C
Run #: 1

Job #: 19-531
Tracking #: 0046
Technician: SJB
Date: 11/13/2019

	Particulate Sampling Data							Flue Gas Data		
Elapsed Time (min)	Gas Meter (ft^3)	Sample Rate (cfm)	Orifice dH (in H_2O)	Meter Temp (°F)	Meter Vacuum (in Hg)	Pro. Rate (%)	Filter (°F)	Flue Draft (in H_2O)	CO_2 (%)	CO (%)
352	51.517	0.144	2.14	105	-3.03	99	79	-0.040	2.34	0.01
353	51.666	0.149	2.16	105	-0.7	100	79	-0.110	2.90	0.04
354	51.810	0.144	2.16	105	-1.78	93	79	-0.060	3.37	0.04
355	51.960	0.150	2.14	105	-2.8	100	79	-0.050	3.53	0.00
356	52.104	0.144	2.14	105	-3.06	97	79	-0.060	2.85	0.00
357	52.253	0.149	2.16	105	-0.68	100	79	-0.060	2.57	0.00
358	52.398	0.145	2.16	105	-0.52	94	79	-0.090	2.11	0.00
359	52.547	0.149	2.15	105	-0.63	101	79	-0.020	2.51	0.02
360	52.691	0.144	2.16	105	-2.11	99	79	-0.060	2.85	0.00
Avg/Tot	52.691	0.146	2.18	98	-1.70	100			4.27	0.01

LAB SAMPLE DATA - ASTM E2515

Client: Hearth & Home Technologies
Model: P35i-C
Run #: 1

Job #: 19-531
Tracking #: 0046
Technician: SJB
Date: 11/13/2019

	Sample ID	Tare, mg	Total, mg	Final, mg	Catch, mg
Train A Filters - First Hour	3617	116.1	116.1	117.2	1.1
Train A Filters - Remainder	3618	121.9	245.0	252.8	7.8
	3619	123.1			
Train A Probe	8A	116824.0	116824.0	116824.1	0.1
Train A O-Rings	8A	3552.5	3552.5	3552.6	0.1
Train B Filters	3620	117.2	240.3	247.8	7.5
	3621	123.1			
Train B Probe	8B	116826.6	116826.6	116826.5	0.0*
Train B O-Rings	8B	3586.3	3586.3	3587.4	1.1
Background Filter			0.0	0.0	

**Negative value corrected to zero*

Placed in Dessicator on:	11/13 - 14:00

Train A Filters - First Hour	117.2	11/14 16:01	117.2	11/15 8:21				
Train A Filters - Remainder	252.7	11/14 16:01	252.8	11/15 8:21				
Train A Probe	116824.1	11/14 16:01	116824.1	11/15 8:21				
Train A O-Rings	3552.6	11/14 16:01	3552.6	11/15 8:21				
Train B Filters	247.8	11/14 16:02	247.8	11/15 8:21				
Train B Probe	116826.7	11/14 16:02	116826.5	11/15 8:21				
Train B O-Rings	3587.4	11/14 16:02	3587.4	11/15 8:21				
Background Filter								

1st hour Sub-Total, mg:	1.1
Remainder Sub-Total, mg:	8.0
Train 1 Aggregate, mg:	**9.1**
Train 2 Aggregate, mg:	**8.6**
Ambient Aggregate, mg:	0.0

ASTM E2779 Pellet Heater Run Sheets

Client: Hearth & Home Technologies Job Number: 19-531 Tracking #: 0046
Model: P35i-C Run Number: 1 Test Date: 11/13/2019

Pellet Heater Control Settings

High Burn Rate Settings: Temp Setting – 7 / Feed Limit – 5.22

Medium Burn Rate Settings: Temp Setting – 4.5 / Feed Limit – 2.6

Low Burn Rate Settings: Temp Setting – 1 / Feed Limit – 1.9

Preburn Notes

Preburn Start Time: 6:23

Time	Notes
N/A	N/A

Test Notes

Test Burn Start Time: 7:23

Time	Notes
60 min	Changed 1-hr filter, turned down to medium test control settings.
180 min	Turned down to low test control settings.
360 min	End of Test.

Test Burn End Time: 13:23

Flue Gas Concentration Measurement

Calibration Gas Values: Span Gas CO_2 (%): 17.00 CO (%): 4.31

Mid Gas CO_2 (%): 10.00 CO (%): 2.51

Calibration Results:

	Pre Test			Post Test		
	Zero	Mid	Span	Zero	Mid	Span
Time	6:15	6:20	6:18	13:40	13:42	13:44
CO_2	0.00	10.09	17.00	0.00	10.05	17.06
CO	0.00	2.504	4.310	-0.008	2.498	4.287

Flue Gas Probe Leak Check: Initial: No Leakage Final: No Leakage

Technician Signature: Date: 11/13/2019

PELLET TEST DATA PACKET
ASTM E2779/E2515

Run 2 Data Summary

Client: Hearth & Home Technologies
Model: P35i-C
Job #: 19-531
Tracking #: 0046
Test Date: 11/14/2019

11/18/2019

Techician Signature Date

TEST RESULTS - ASTM E2779 / ASTM E2515

Client: Hearth & Home Technologies
Model: P35i-C
Run #: 2

Job #: 19-531
Tracking #: 0046
Technician: SJB
Date: 11/14/2019

Burn Rate Summary		
High Burn Rate (dry kg/hr)	2.12	
Medium Burn Rate (dry kg/hr)	1.00	47.0% of High Burn Rate
Low Burn Rate (dry kg/hr)	0.86	40.7% of High Burn Rate
Overall Burn Rate (dry kg/hr)	1.12	

	Ambient Sample	Sample Train A	Sample Train B	1st Hour Filter
Total Sample Volume (ft^3)	0.000	52.930	51.851	8.655
Average Gas Velocity in Dilution Tunnel (ft/sec)	14.5			
Average Gas Flow Rate in Dilution Tunnel (dscf/hr)	9479.4			
Average Gas Meter Temperature (°F)	70.8	95.1	96.9	78.2
Total Sample Volume (dscf)	0.000	50.472	49.132	8.513
Average Tunnel Temperature (°F)	98.7			
Total Time of Test (min)	360			
Total Particulate Catch (mg)	0.0	8.3	7.1	1.4
Particulate Concentration, dry-standard (g/dscf)	0.0000000	0.0001644	0.0001445	0.0001645
Total PM Emissions (g)	0.00	9.35	8.22	1.56
Particulate Emission Rate (g/hr)	0.00	1.56	1.37	1.56
Emissions Factor (g/kg)	-	1.40	1.23	0.73
Difference from Average Total Particulate Emissions (g)	-	0.57	0.57	-
Difference from Average Emissions Factor (g/kg)	-	0.08	0.08	-

Final Average Results	
Total Particulate Emissions (g)	8.79
Particulate Emission Rate (g/hr)	1.46
Emissions Factor (g/kg)	1.31
HHV Efficiency (%)	68.2%
LHV Efficiency (%)	72.9%
CO Emissions (g/min)	0.07

Quality Checks	Requirement	Observed	Result
Dual Train Precision	Each train within 7.5% of average emissions (in grams), or emission factors within 0.5 g/kg	See Above	OK
Filter Temps	<90 °F	77	OK
Face Velocity	< 30 ft/min	8.1	OK
Leakage Rate	Less than 4% of average sample rate	0.002 cfm	OK
Ambient Temp	55-90 °F	Min: 69 / Max: 72	OK
Negative Probe Weight Evaluation	<5% of Total Catch	Probe Catch Not Negative	OK
Pro-Rate Variation	90% of readings between 90-110%; none greater than 120% or less than 80%	See Data Tabs	OK
Medium Burn Rate	< 50% of High	47.0%	OK

Overall Pellet Test Efficiency Results

Manufacturer: Hearth & Home Technologies
Model: P35i-C
Date: 11/14/19
Run: 2
Control #: 19-531
Test Duration: 360
Output Category: Integrated

Test Results in Accordance with CSA B415.1-09

	HHV Basis	LHV Basis
Overall Efficiency	68.2%	72.9%
Combustion Efficiency	99.5%	99.5%
Heat Transfer Efficiency	68.5%	73.3%

Output Rate (kJ/h)	15,367	14,577	**(Btu/h)**
Burn Rate (kg/h)	1.12	2.46	**(lb/h)**
Input (kJ/h)	22,548	21,389	**(Btu/h)**

Test Load Weight (dry kg)	6.71	14.78	**dry lb**
MC wet (%)	6.45		
MC dry (%)	6.90		
Particulate (g)	8.79		
CO (g)	24		
Test Duration (h)	6.00		

Emissions	Particulate	CO
g/MJ Output	0.10	0.26
g/kg Dry Fuel	1.31	3.61
g/h	1.46	4.03
g/min	0.02	0.07
lb/MM Btu Output	0.22	0.61

Air/Fuel Ratio (A/F)	30.17

VERSION: **2.2** **12/14/2009**

Max Burn Rate Segment Efficiency Results

Manufacturer: Hearth & Home Technologies
Model: P35i-C
Date: 11/14/19
Run: 2
Control #: 19-531
Test Duration: 60
Output Category: Maximum

Test Results in Accordance with CSA B415.1-09

	HHV Basis	LHV Basis
Overall Efficiency	75.4%	80.6%
Combustion Efficiency	99.5%	99.5%
Heat Transfer Efficiency	75.8%	81.0%

Output Rate (kJ/h)	32,273	30,614	**(Btu/h)**
Burn Rate (kg/h)	2.12	4.68	**(lb/h)**
Input (kJ/h)	42,813	40,612	**(Btu/h)**

Test Load Weight (dry kg)	2.12	4.68	**dry lb**
MC wet (%)	6.45		
MC dry (%)	6.90		
Particulate (g)	N/A		
CO (g)	10		
Test Duration (h)	1.00		

Emissions	Particulate	CO
g/MJ Output	N/A	0.31
g/kg Dry Fuel	N/A	4.65
g/h	N/A	9.86
g/min	N/A	0.16
lb/MM Btu Output	N/A	0.71

Air/Fuel Ratio (A/F)	13.81

VERSION: **2.2** **12/14/2009**

Medium Burn Rate Segment Efficiency Results

Manufacturer: Hearth & Home Technologies
Model: P35i-C
Date: 11/14/19
Run: 2
Control #: 19-531
Test Duration: 120
Output Category: Medium

Test Results in Accordance with CSA B415.1-09

	HHV Basis	LHV Basis
Overall Efficiency	65.9%	70.5%
Combustion Efficiency	99.5%	99.5%
Heat Transfer Efficiency	66.3%	70.9%

Output Rate (kJ/h)	13,269	12,587	**(Btu/h)**
Burn Rate (kg/h)	1.00	2.20	**(lb/h)**
Input (kJ/h)	20,122	19,088	**(Btu/h)**

Test Load Weight (dry kg)	1.99	4.40	**dry lb**
MC wet (%)	6.45		
MC dry (%)	6.90		
Particulate (g)	N/A		
CO (g)	7		
Test Duration (h)	2.00		

Emissions	Particulate	CO
g/MJ Output	N/A	0.26
g/kg Dry Fuel	N/A	3.52
g/h	N/A	3.51
g/min	N/A	0.06
lb/MM Btu Output	N/A	0.61

Air/Fuel Ratio (A/F)	34.22

VERSION: **2.2** **12/14/2009**

Minimum Burn Rate Segment Efficiency Results

Manufacturer: Hearth & Home Technologies
Model: P35i-C
Date: 11/14/19
Run: 2
Control #: 19-531
Test Duration: 180
Output Category: Minimum

Test Results in Accordance with CSA B415.1-09

	HHV Basis	LHV Basis
Overall Efficiency	63.9%	68.3%
Combustion Efficiency	99.5%	99.5%
Heat Transfer Efficiency	64.2%	68.6%

Output Rate (kJ/h)	11,117	10,546	**(Btu/h)**
Burn Rate (kg/h)	0.86	1.90	**(lb/h)**
Input (kJ/h)	17,411	16,516	**(Btu/h)**

Test Load Weight (dry kg)	2.59	5.71	**dry lb**
MC wet (%)	6.45		
MC dry (%)	6.90		
Particulate (g)	N/A		
CO (g)	7		
Test Duration (h)	3.00		

Emissions	Particulate	CO
g/MJ Output	N/A	0.22
g/kg Dry Fuel	N/A	2.88
g/h	N/A	2.48
g/min	N/A	0.04
lb/MM Btu Output	N/A	0.52

Air/Fuel Ratio (A/F)	44.18

VERSION: **2.2** **12/14/2009**

DILUTION TUNNEL & MISC. DATA - ASTM E2779 / E2515

Client:	Hearth & Home Technologies	Job #:	19-531
Model:	P35i-C	Tracking #:	0046
Run #:	2	Technician:	SJB
Test Start Time:	9:44	Date:	11/14/2019

High Burn End Time (min):	60
Medium Burn End Time (min):	180
Total Sampling Time (min):	360
Recording Interval (min):	1

Meter Box γ Factor:	0.999	(A)
Meter Box γ Factor:	0.996	(B)
Meter Box γ Factor:	0.992	(Ambient)

Induced Draft Check (in. H_2O):	0
Smoke Capture Check (%):	100%
Date Flue Pipe Last Cleaned:	11/12/2019

	Pre-Test	Post Test	Avg.
Barometric Pressure (in. Hg)	29.9	29.86	29.88
Relative Humidity (%)	33.9	39.7	
Room Air Velocity (ft/min)	0	0	
Scale Audit (lbs)	10.0	10.0	
Ambient Sample Volume:			ft^3

Sample Train Post-Test Leak Checks

(A)	0.000	cfm @	-11	in. Hg
(B)	0.002	cfm @	-15	in. Hg
(Ambient)		cfm @		in. Hg

DILUTION TUNNEL FLOW

Traverse Data

Point	dP (in H_2O)	Temp (°F)
1	0.042	104
2	0.052	104
3	0.050	104
4	0.038	104
5	0.036	104
6	0.050	104
7	0.048	104
8	0.040	104
Center	0.052	104

Static Pressure: -0.140 in. H_2O

Dilution Tunnel H_2O:	2.00	percent
Tunnel Diameter:	6	inches
Pitot Tube Cp:	0.99	[unitless]
Dilution Tunnel MW(dry):	29.00	lb/lb-mole
Dilution Tunnel MW(wet):	28.78	lb/lb-mole
Tunnel Area:	0.1963	ft^2
V_{strav}:	14.56	ft/sec
V_{scent}:	15.63	ft/sec
F_p:	0.932	[ratio]
Initial Tunnel Flow:	155.7	scf/min

TEST FUEL PROPERTIES

Default Fuel Values

Fuel Type:	D. Fir	Oak
HHV (kJ/kg)	19,810	19,887
%C	48.73	50
%H	6.87	6.6
%O	43.9	42.9
%Ash	0.5	0.5

Actual Fuel Used Properties

Pellet Brand:	Olympus
Pellet Fuel Grade:	PFI Premium
HHV (kJ/kg)	20,174
%C	51.13
%H	6.08
%O	42.6
%Ash	0.19
MC (%DB)	6.90

PELLET STOVE PREBURN DATA - ASTM E2779

Client: Hearth & Home Technologies
Model: P35i-C
Run #: 2

Job #: 19-531
Tracking #: 0046
Technician: SJB
Date: 11/14/2019

Recording Interval (min): 1
Run Time (min): 60

Elapsed Time (min)	Scale Reading (lbs)	Weight Change (lbs)	Flue Draft (in H_2O)	Flue (°F)	Ambient (°F)
		Average:	-0.074	415	68
0	29.2	-	-0.049	321	67
1	29.1	-0.1	-0.059	316	67
2	29.1	0	-0.048	316	67
3	29.0	-0.1	-0.095	321	67
4	29.0	0	-0.083	328	67
5	28.9	-0.1	-0.063	334	67
6	28.9	0	-0.063	343	67
7	28.8	-0.1	-0.065	353	67
8	28.7	-0.1	-0.114	360	67
9	28.6	-0.1	-0.045	367	67
10	28.4	-0.2	-0.072	377	67
11	28.4	0	-0.084	386	67
12	28.4	0	-0.087	391	67
13	28.3	-0.1	-0.066	395	67
14	28.2	-0.1	-0.084	404	67
15	28.0	-0.2	-0.063	407	67
16	28.0	0	-0.047	412	67
17	27.9	-0.1	-0.072	416	67
18	27.8	-0.1	-0.056	420	68
19	27.7	-0.1	-0.064	425	67
20	27.8	0.1	-0.080	426	68
21	27.5	-0.3	-0.082	427	68
22	27.5	0	-0.082	429	68
23	27.4	-0.1	-0.124	430	68
24	27.3	-0.1	-0.075	434	68
25	27.2	-0.1	-0.066	433	68
26	27.2	0	-0.036	433	68
27	27.1	-0.1	-0.094	435	68
28	27.0	-0.1	-0.085	435	68
29	26.9	-0.1	-0.073	433	68
30	26.8	-0.1	-0.114	433	68
31	26.7	-0.1	-0.091	436	68
32	26.6	-0.1	-0.123	436	68
33	26.5	-0.1	-0.078	438	68
34	26.5	0	-0.052	437	68
35	26.3	-0.2	-0.041	438	68
36	26.3	0	-0.073	440	68
37	26.2	-0.1	-0.099	441	69
38	26.1	-0.1	-0.073	442	69
39	26.0	-0.1	-0.093	443	69
40	25.9	-0.1	-0.064	444	69
41	25.9	0	-0.047	447	69
42	25.8	-0.1	-0.087	448	69
43	25.7	-0.1	-0.095	449	69
44	25.6	-0.1	-0.052	447	69
45	25.5	-0.1	-0.042	447	69
46	25.4	-0.1	-0.048	443	69

PELLET STOVE PREBURN DATA - ASTM E2779

Client: Hearth & Home Technologies
Job #: 19-531
Model: P35i-C
Tracking #: 0046
Run #: 2
Technician: SJB
Date: 11/14/2019

47	25.3	-0.1	-0.091	441	69
48	25.3	0	-0.088	438	69
49	25.2	-0.1	-0.062	436	69
50	25.2	0	-0.084	432	69
51	25.1	-0.1	-0.096	433	69
52	25.0	-0.1	-0.079	434	69
53	24.9	-0.1	-0.077	436	69
54	24.8	-0.1	-0.077	438	69
55	24.7	-0.1	-0.090	440	69
56	24.6	-0.1	-0.046	437	69
57	24.6	0	-0.061	435	69
58	24.5	-0.1	-0.073	435	69
59	24.5	0	-0.093	434	69
60	24.3	-0.2	-0.062	435	69

BOX A TEST DATA - ASTM E2779 / ASTM E2515

Client: Hearth & Home Technologies
Model: P35i-C
Run #: 2

Job #: 19-531
Tracking #: 0046
Technician: SJB
Date: 11/14/2019

	Particulate Sampling Data							Fuel Weight (lb)		Temperature Data (°F)			
Elapsed Time (min)	Gas Meter (ft^3)	Sample Rate (cfm)	Dilution Tunnel dP (in H_2O)	Orifice dH (in H_2O)	Meter Temp (°F)	Meter Vacuum (in Hg)	Pro. Rate (%)	Scale Reading	Weight Change	Dilution Tunnel	Flue	Filter	Ambient
0	0.000		0.053	0.01	70	0		15.8		102	435	67	69
1	0.132	0.132	0.055	2.30	70	0	92	15.7	-0.1	103	437	67	69
2	0.280	0.148	0.054	2.25	70	-2.02	104	15.7	0.0	103	438	68	69
3	0.423	0.143	0.053	2.26	70	-1.74	101	15.6	-0.1	103	439	68	69
4	0.570	0.147	0.054	2.25	70	0	103	15.5	-0.1	103	442	68	69
5	0.713	0.143	0.055	2.23	70	-0.54	99	15.4	-0.1	103	444	68	69
6	0.858	0.145	0.052	2.22	70	0	104	15.3	-0.1	104	447	68	70
7	1.001	0.143	0.052	2.22	71	-2.6	102	15.2	-0.1	103	450	68	70
8	1.145	0.144	0.049	2.20	71	-2	106	15.1	-0.1	104	450	69	69
9	1.290	0.145	0.056	2.21	71	0	100	15.0	-0.1	103	448	69	69
10	1.433	0.143	0.048	2.20	71	-1.11	106	15.0	0.0	103	447	69	69
11	1.579	0.146	0.053	2.20	71	-0.01	103	14.9	-0.1	104	446	69	70
12	1.721	0.142	0.051	2.21	72	0	102	14.8	-0.1	104	444	69	69
13	1.868	0.147	0.051	2.18	72	-1.91	106	14.7	-0.1	104	441	69	70
14	2.009	0.141	0.052	2.20	72	-0.31	101	14.7	0.0	104	439	70	70
15	2.155	0.146	0.053	2.19	73	-2.22	103	14.6	-0.1	104	438	70	70
16	2.296	0.141	0.055	2.20	73	0	98	14.5	-0.1	104	438	70	70
17	2.442	0.146	0.049	2.17	73	-0.54	107	14.3	-0.2	104	436	70	70
18	2.583	0.141	0.054	2.19	74	-0.1	98	14.4	0.1	104	439	70	70
19	2.730	0.147	0.050	2.19	74	-1.61	107	14.2	-0.2	104	441	70	70
20	2.872	0.142	0.053	2.18	74	-2.42	100	14.2	0.0	104	443	70	70
21	3.019	0.147	0.054	2.18	75	0	102	14.0	-0.2	104	444	71	70
22	3.160	0.141	0.048	2.17	75	-1.1	104	14.0	0.0	104	445	71	70
23	3.306	0.146	0.057	2.19	76	-2.06	99	13.9	-0.1	104	443	71	70
24	3.448	0.142	0.054	2.16	76	-2.35	99	13.8	-0.1	104	444	71	70
25	3.593	0.145	0.053	2.16	76	-1.89	102	13.7	-0.1	104	447	71	70
26	3.736	0.143	0.054	2.16	77	-1.01	99	13.6	-0.1	105	451	71	70
27	3.880	0.144	0.051	2.17	77	0	103	13.5	-0.1	105	452	71	70
28	4.025	0.145	0.051	2.17	77	-2.43	104	13.5	0.0	105	453	71	70
29	4.168	0.143	0.052	2.17	78	0	101	13.4	-0.1	104	451	71	70
30	4.314	0.146	0.048	2.18	78	-1.5	107	13.3	-0.1	105	452	71	70
31	4.457	0.143	0.056	2.17	79	0	97	13.2	-0.1	105	450	72	70
32	4.603	0.146	0.052	2.18	79	0	103	13.1	-0.1	105	448	72	70

BOX A TEST DATA - ASTM E2779 / ASTM E2515

Client: Hearth & Home Technologies
Model: P35i-C
Run #: 2

Job #: 19-531
Tracking #: 0046
Technician: SJB
Date: 11/14/2019

	Particulate Sampling Data							Fuel Weight (lb)		Temperature Data (°F)			
Elapsed Time (min)	Gas Meter (ft^3)	Sample Rate (cfm)	Dilution Tunnel dP (in H_2O)	Orifice dH (in H_2O)	Meter Temp (°F)	Meter Vacuum (in Hg)	Pro. Rate (%)	Scale Reading	Weight Change	Dilution Tunnel	Flue	Filter	Ambient
33	4.745	0.142	0.050	2.18	79	0	102	13.0	-0.1	104	444	72	70
34	4.892	0.147	0.054	2.15	80	-2.34	101	13.0	0.0	104	443	72	70
35	5.033	0.141	0.054	2.16	80	-2.58	97	12.9	-0.1	105	442	72	70
36	5.180	0.147	0.050	2.16	80	-1	105	12.7	-0.2	104	439	72	70
37	5.321	0.141	0.051	2.15	81	-2.44	100	12.7	0.0	105	438	72	70
38	5.469	0.148	0.052	2.15	81	-2.34	104	12.6	-0.1	104	437	72	70
39	5.610	0.141	0.052	2.16	81	-2.01	99	12.6	0.0	105	438	72	70
40	5.758	0.148	0.052	2.19	82	-2.32	104	12.5	-0.1	104	438	72	70
41	5.900	0.142	0.051	2.16	82	0	100	12.4	-0.1	104	437	72	70
42	6.048	0.148	0.050	2.16	82	0	106	12.4	0.0	105	436	72	70
43	6.191	0.143	0.052	2.16	83	-0.19	100	12.3	-0.1	105	437	72	70
44	6.338	0.147	0.049	2.16	83	-2.12	106	12.2	-0.1	105	438	72	70
45	6.480	0.142	0.054	2.15	83	-2.52	97	12.1	-0.1	105	438	72	70
46	6.627	0.147	0.054	2.15	84	0	101	12.0	-0.1	105	441	72	70
47	6.770	0.143	0.051	2.16	84	0	101	11.9	-0.1	105	449	72	70
48	6.916	0.146	0.056	2.15	84	-2.58	98	11.8	-0.1	105	451	72	71
49	7.060	0.144	0.053	2.14	85	-0.1	99	11.7	-0.1	105	452	72	71
50	7.204	0.144	0.055	2.14	85	0	98	11.6	-0.1	105	449	72	71
51	7.350	0.146	0.055	2.16	85	-0.13	99	11.5	-0.1	105	448	73	71
52	7.494	0.144	0.046	2.15	86	-0.73	107	11.3	-0.2	105	450	73	71
53	7.640	0.146	0.052	2.17	86	-2.6	102	11.4	0.1	105	451	73	71
54	7.784	0.144	0.054	2.14	86	-2.39	98	11.3	-0.1	105	452	73	71
55	7.931	0.147	0.049	2.15	86	-2.03	105	11.3	0.0	106	449	73	71
56	8.074	0.143	0.052	2.14	87	-2.35	99	11.1	-0.2	105	447	73	71
57	8.222	0.148	0.053	2.14	87	-1.5	102	11.0	-0.1	105	446	73	71
58	8.365	0.143	0.054	2.13	87	-0.87	97	11.0	0.0	105	440	73	71
59	8.512	0.147	0.054	2.15	87	-0.7	100	10.9	-0.1	105	437	73	71
60	8.655	0.143	0.054	2.15	88	-1.25	97	10.8	-0.1	105	434	73	71
61	8.803	0.148	0.048	2.15	88	0	107	10.8	0.0	105	430	73	71
62	8.952	0.149	0.053	2.20	88	-2.49	102	10.7	-0.1	105	423	73	71
63	9.101	0.149	0.054	2.21	88	0	101	10.7	0.0	104	409	73	71
64	9.245	0.144	0.050	2.21	89	-2.42	102	10.7	0.0	104	392	73	71
65	9.394	0.149	0.053	2.19	89	-1.62	102	10.6	-0.1	104	380	73	71

BOX A TEST DATA - ASTM E2779 / ASTM E2515

Client: Hearth & Home Technologies
Model: P35i-C
Run #: 2

Job #: 19-531
Tracking #: 0046
Technician: SJB
Date: 11/14/2019

	Particulate Sampling Data							Fuel Weight (lb)		Temperature Data (°F)			
Elapsed Time (min)	Gas Meter (ft^3)	Sample Rate (cfm)	Dilution Tunnel dP (in H_2O)	Orifice dH (in H_2O)	Meter Temp (°F)	Meter Vacuum (in Hg)	Pro. Rate (%)	Scale Reading	Weight Change	Dilution Tunnel	Flue	Filter	Ambient
66	9.538	0.144	0.049	2.22	89	0	102	10.6	0.0	103	369	73	71
67	9.687	0.149	0.054	2.21	89	-1.78	101	10.6	0.0	102	356	73	71
68	9.832	0.145	0.052	2.20	89	-0.54	100	10.4	-0.2	102	344	73	71
69	9.981	0.149	0.051	2.17	90	-1.02	104	10.4	0.0	101	337	73	70
70	10.126	0.145	0.050	2.22	90	-1.17	102	10.5	0.1	100	328	73	70
71	10.275	0.149	0.052	2.19	90	-1.35	102	10.5	0.0	100	322	73	70
72	10.420	0.145	0.051	2.18	90	-0.04	101	10.4	-0.1	100	317	73	70
73	10.568	0.148	0.053	2.21	90	-0.44	101	10.4	0.0	99	310	73	70
74	10.713	0.145	0.055	2.19	91	-1.22	97	10.3	-0.1	99	308	73	70
75	10.862	0.149	0.052	2.18	91	-2.43	102	10.3	0.0	98	306	73	70
76	11.007	0.145	0.050	2.21	91	-1.33	101	10.3	0.0	98	309	73	70
77	11.156	0.149	0.047	2.21	91	-1.35	107	10.2	-0.1	98	312	73	70
78	11.301	0.145	0.050	2.20	91	-0.63	101	10.2	0.0	98	310	73	70
79	11.450	0.149	0.054	2.20	91	-2.25	100	10.2	0.0	97	308	73	70
80	11.596	0.146	0.055	2.18	92	-1.99	97	10.2	0.0	98	309	73	70
81	11.744	0.148	0.051	2.17	92	-1.7	102	10.1	-0.1	97	309	73	70
82	11.890	0.146	0.055	2.21	92	-2.67	97	10.0	-0.1	97	308	73	70
83	12.039	0.149	0.052	2.20	92	0	102	10.1	0.1	97	307	73	70
84	12.185	0.146	0.051	2.18	92	-0.32	101	10.0	-0.1	97	310	73	70
85	12.333	0.148	0.054	2.20	92	0	99	10.0	0.0	97	311	73	70
86	12.479	0.146	0.051	2.21	93	0	101	9.9	-0.1	97	308	73	70
87	12.627	0.148	0.054	2.20	93	-0.45	99	9.9	0.0	97	312	73	70
88	12.774	0.147	0.052	2.19	93	-2.58	100	9.8	-0.1	98	321	73	70
89	12.921	0.147	0.050	2.20	93	-1.74	102	9.7	-0.1	97	318	73	70
90	13.069	0.148	0.054	2.18	93	-1.13	99	9.9	0.2	98	315	73	70
91	13.216	0.147	0.052	2.18	93	-2.19	100	9.7	-0.2	98	314	73	70
92	13.364	0.148	0.054	2.17	93	0	99	9.7	0.0	98	317	73	70
93	13.512	0.148	0.054	2.19	94	0	99	9.6	-0.1	98	320	73	70
94	13.660	0.148	0.054	2.20	94	-2.24	99	9.6	0.0	98	322	73	70
95	13.806	0.146	0.052	2.19	94	-2.7	100	9.5	-0.1	98	322	73	70
96	13.955	0.149	0.050	2.17	94	0	104	9.5	0.0	98	321	73	70
97	14.102	0.147	0.055	2.19	94	-1.29	97	9.4	-0.1	98	320	73	70
98	14.250	0.148	0.054	2.18	94	0	99	9.4	0.0	98	323	73	70

BOX A TEST DATA - ASTM E2779 / ASTM E2515

Client: Hearth & Home Technologies
Model: P35i-C
Run #: 2

Job #: 19-531
Tracking #: 0046
Technician: SJB
Date: 11/14/2019

	Particulate Sampling Data							Fuel Weight (lb)		Temperature Data (°F)			
Elapsed Time (min)	Gas Meter (ft^3)	Sample Rate (cfm)	Dilution Tunnel dP (in H_2O)	Orifice dH (in H_2O)	Meter Temp (°F)	Meter Vacuum (in Hg)	Pro. Rate (%)	Scale Reading	Weight Change	Dilution Tunnel	Flue	Filter	Ambient
99	14.396	0.146	0.052	2.17	94	-1.65	100	9.4	0.0	98	323	73	70
100	14.545	0.149	0.055	2.19	94	-1.24	99	9.3	-0.1	98	321	73	70
101	14.691	0.146	0.052	2.18	94	-0.48	100	9.3	0.0	98	317	73	70
102	14.841	0.150	0.052	2.16	95	-2.16	102	9.2	-0.1	98	318	73	70
103	14.986	0.145	0.056	2.19	95	0	95	9.1	-0.1	98	317	73	70
104	15.136	0.150	0.050	2.19	95	-2.54	104	9.2	0.1	98	314	73	70
105	15.281	0.145	0.049	2.18	95	-0.48	102	9.1	-0.1	98	313	73	70
106	15.431	0.150	0.052	2.19	95	0	102	9.1	0.0	98	310	73	70
107	15.576	0.145	0.052	2.20	95	-0.72	99	9.0	-0.1	98	307	73	70
108	15.725	0.149	0.052	2.18	95	-2.51	101	9.0	0.0	98	308	73	70
109	15.870	0.145	0.053	2.18	95	-2.25	98	8.9	-0.1	97	309	73	70
110	16.021	0.151	0.052	2.18	95	0	103	8.9	0.0	97	307	73	70
111	16.166	0.145	0.054	2.18	95	-2.59	97	8.9	0.0	97	307	73	70
112	16.316	0.150	0.050	2.18	96	-0.74	104	8.9	0.0	97	308	73	70
113	16.461	0.145	0.050	2.19	96	-2.52	100	8.8	-0.1	97	302	73	70
114	16.611	0.150	0.053	2.18	96	-0.02	101	8.8	0.0	97	299	73	70
115	16.755	0.144	0.051	2.18	96	-2.07	99	8.7	-0.1	97	299	73	70
116	16.906	0.151	0.053	2.18	96	-1.81	101	8.6	-0.1	97	296	73	70
117	17.051	0.145	0.050	2.18	96	-2.26	100	8.6	0.0	97	298	73	70
118	17.202	0.151	0.056	2.17	96	-2.55	99	8.6	0.0	97	301	73	70
119	17.347	0.145	0.051	2.19	96	-1.97	99	8.6	0.0	97	302	73	70
120	17.498	0.151	0.045	2.16	96	-0.26	110	8.6	0.0	97	301	73	70
121	17.643	0.145	0.051	2.18	96	-0.19	99	8.6	0.0	97	301	73	70
122	17.793	0.150	0.050	2.18	96	-0.3	104	8.5	-0.1	97	302	73	70
123	17.938	0.145	0.051	2.17	96	-1.04	99	8.5	0.0	97	305	73	70
124	18.089	0.151	0.049	2.19	97	-2.24	105	8.3	-0.2	97	309	73	70
125	18.234	0.145	0.052	2.19	97	0	98	8.4	0.1	97	311	73	70
126	18.384	0.150	0.058	2.17	97	-0.6	96	8.2	-0.2	97	312	73	70
127	18.530	0.146	0.058	2.18	97	-0.75	94	8.3	0.1	98	312	73	70
128	18.679	0.149	0.057	2.18	97	-2.11	96	8.3	0.0	97	313	73	70
129	18.825	0.146	0.054	2.19	97	-1.7	97	8.2	-0.1	98	315	73	70
130	18.974	0.149	0.054	2.19	97	-2.31	99	8.2	0.0	98	316	73	70
131	19.120	0.146	0.048	2.19	97	-1.98	103	8.1	-0.1	98	314	73	70

BOX A TEST DATA - ASTM E2779 / ASTM E2515

Client: Hearth & Home Technologies
Model: P35i-C
Run #: 2

Job #: 19-531
Tracking #: 0046
Technician: SJB
Date: 11/14/2019

	Particulate Sampling Data							Fuel Weight (lb)		Temperature Data (°F)			
Elapsed Time (min)	Gas Meter (ft^3)	Sample Rate (cfm)	Dilution Tunnel dP (in H_2O)	Orifice dH (in H_2O)	Meter Temp (°F)	Meter Vacuum (in Hg)	Pro. Rate (%)	Scale Reading	Weight Change	Dilution Tunnel	Flue	Filter	Ambient
132	19.269	0.149	0.054	2.17	97	0	99	8.1	0.0	98	316	73	70
133	19.416	0.147	0.053	2.19	97	-1.25	99	8.0	-0.1	98	320	73	70
134	19.564	0.148	0.055	2.18	97	-2.57	98	8.0	0.0	98	322	73	70
135	19.711	0.147	0.053	2.18	97	-1.24	99	8.0	0.0	98	322	73	70
136	19.859	0.148	0.050	2.19	97	-0.01	102	7.9	-0.1	98	319	73	70
137	20.006	0.147	0.052	2.18	97	-2.28	100	7.9	0.0	98	314	73	70
138	20.155	0.149	0.049	2.18	97	0	104	7.8	-0.1	98	314	73	70
139	20.303	0.148	0.053	2.17	97	-2.32	99	7.8	0.0	98	315	73	70
140	20.451	0.148	0.052	2.18	97	0	100	7.8	0.0	98	315	73	70
141	20.599	0.148	0.050	2.17	98	-1.8	102	7.7	-0.1	98	315	73	70
142	20.746	0.147	0.054	2.18	98	0	98	7.6	-0.1	98	318	73	70
143	20.895	0.149	0.052	2.18	98	-0.97	101	7.6	0.0	98	320	73	70
144	21.042	0.147	0.053	2.19	98	-0.3	99	7.6	0.0	98	320	73	70
145	21.191	0.149	0.051	2.16	98	-2.25	102	7.4	-0.2	98	323	73	70
146	21.337	0.146	0.053	2.17	98	0	98	7.5	0.1	98	325	73	70
147	21.487	0.150	0.046	2.16	98	-1.3	108	7.4	-0.1	99	323	73	70
148	21.633	0.146	0.053	2.17	98	0	98	7.4	0.0	99	321	73	70
149	21.782	0.149	0.050	2.22	98	-2.46	103	7.3	-0.1	98	318	73	70
150	21.928	0.146	0.049	2.17	98	0	102	7.3	0.0	99	317	73	70
151	22.077	0.149	0.052	2.19	98	-1.68	101	7.3	0.0	98	315	73	70
152	22.222	0.145	0.050	2.18	98	0	100	7.3	0.0	98	313	73	70
153	22.373	0.151	0.052	2.20	98	-0.22	102	7.2	-0.1	98	308	73	70
154	22.518	0.145	0.051	2.18	98	-2.33	99	7.2	0.0	98	310	73	70
155	22.669	0.151	0.049	2.19	98	-2.32	105	7.1	-0.1	98	316	73	70
156	22.813	0.144	0.054	2.20	98	-1.21	96	7.1	0.0	98	317	73	70
157	22.964	0.151	0.052	2.20	98	-0.75	102	7.0	-0.1	98	318	73	70
158	23.109	0.145	0.047	2.16	98	-0.53	103	7.0	0.0	98	319	73	70
159	23.260	0.151	0.051	2.16	98	-1.36	103	6.9	-0.1	98	320	73	70
160	23.406	0.146	0.054	2.17	98	-2.02	97	6.9	0.0	98	321	73	70
161	23.557	0.151	0.051	2.18	99	-2.59	103	6.9	0.0	98	317	73	71
162	23.702	0.145	0.056	2.18	99	0	94	6.8	-0.1	98	317	73	71
163	23.853	0.151	0.054	2.17	99	0	100	6.8	0.0	98	316	73	71
164	23.997	0.144	0.055	2.19	99	0	95	6.7	-0.1	98	315	73	70

BOX A TEST DATA - ASTM E2779 / ASTM E2515

Client: Hearth & Home Technologies
Model: P35i-C
Run #: 2

Job #: 19-531
Tracking #: 0046
Technician: SJB
Date: 11/14/2019

	Particulate Sampling Data							Fuel Weight (lb)		Temperature Data (°F)			
Elapsed Time (min)	Gas Meter (ft^3)	Sample Rate (cfm)	Dilution Tunnel dP (in H_2O)	Orifice dH (in H_2O)	Meter Temp (°F)	Meter Vacuum (in Hg)	Pro. Rate (%)	Scale Reading	Weight Change	Dilution Tunnel	Flue	Filter	Ambient
165	24.148	0.151	0.051	2.18	99	0	103	6.7	0.0	98	320	73	70
166	24.294	0.146	0.056	2.16	99	-2.49	95	6.6	-0.1	99	326	73	71
167	24.444	0.150	0.049	2.20	99	0	104	6.5	-0.1	99	326	73	71
168	24.589	0.145	0.050	2.17	99	-0.41	100	6.5	0.0	99	326	73	71
169	24.739	0.150	0.050	2.18	99	0	103	6.5	0.0	99	326	73	71
170	24.884	0.145	0.051	2.17	99	-0.9	99	6.4	-0.1	99	326	73	71
171	25.034	0.150	0.055	2.19	99	-0.3	99	6.4	0.0	99	326	73	71
172	25.180	0.146	0.051	2.17	99	0	100	6.4	0.0	99	328	73	71
173	25.330	0.150	0.050	2.19	99	-2.25	103	6.3	-0.1	99	330	73	71
174	25.476	0.146	0.048	2.18	99	-1	103	6.3	0.0	99	327	73	71
175	25.625	0.149	0.054	2.16	99	-2.62	99	6.2	-0.1	99	325	73	71
176	25.772	0.147	0.054	2.19	99	-2.37	98	6.2	0.0	99	322	73	71
177	25.920	0.148	0.055	2.19	99	-1.88	97	6.1	-0.1	99	320	73	71
178	26.068	0.148	0.054	2.16	99	-2.27	98	6.1	0.0	99	316	73	71
179	26.216	0.148	0.049	2.17	99	-0.46	103	6.1	0.0	99	315	73	71
180	26.364	0.148	0.048	2.16	99	0	104	6.1	0.0	99	315	73	71
181	26.512	0.148	0.049	2.15	99	-1.87	103	6.0	-0.1	99	313	74	71
182	26.661	0.149	0.053	2.16	99	-0.52	100	6.0	0.0	98	312	73	71
183	26.807	0.146	0.052	2.17	99	0	99	5.9	-0.1	98	310	73	71
184	26.956	0.149	0.051	2.17	99	0	102	5.9	0.0	98	306	74	71
185	27.102	0.146	0.053	2.17	99	-0.94	98	5.9	0.0	98	301	74	71
186	27.252	0.150	0.048	2.15	99	-1.87	105	5.9	0.0	98	297	74	71
187	27.398	0.146	0.054	2.16	99	-2.15	97	5.8	-0.1	98	291	74	71
188	27.548	0.150	0.055	2.15	99	-1.77	98	5.8	0.0	97	287	74	71
189	27.693	0.145	0.053	2.18	99	-1.78	97	5.8	0.0	97	285	74	71
190	27.843	0.150	0.051	2.18	99	-0.34	102	5.7	-0.1	97	280	74	71
191	27.988	0.145	0.056	2.18	99	0	94	5.6	-0.1	97	277	74	71
192	28.138	0.150	0.050	2.14	99	-1.99	103	5.7	0.1	97	277	74	71
193	28.283	0.145	0.053	2.18	99	0	97	5.7	0.0	96	273	74	71
194	28.434	0.151	0.048	2.17	99	-0.19	106	5.6	-0.1	96	266	74	71
195	28.578	0.144	0.056	2.19	99	-1.97	94	5.6	0.0	96	263	74	71
196	28.729	0.151	0.052	2.16	100	-0.89	102	5.6	0.0	96	266	74	71
197	28.874	0.145	0.052	2.18	99	0	98	5.5	-0.1	96	269	74	71

BOX A TEST DATA - ASTM E2779 / ASTM E2515

Client: Hearth & Home Technologies
Model: P35i-C
Run #: 2

Job #: 19-531
Tracking #: 0046
Technician: SJB
Date: 11/14/2019

	Particulate Sampling Data							Fuel Weight (lb)		Temperature Data (°F)			
Elapsed Time (min)	Gas Meter (ft^3)	Sample Rate (cfm)	Dilution Tunnel dP (in H_2O)	Orifice dH (in H_2O)	Meter Temp (°F)	Meter Vacuum (in Hg)	Pro. Rate (%)	Scale Reading	Weight Change	Dilution Tunnel	Flue	Filter	Ambient
198	29.025	0.151	0.050	2.16	100	-1.14	104	5.6	0.1	96	272	74	71
199	29.170	0.145	0.053	2.16	100	-2.11	97	5.5	-0.1	96	280	74	71
200	29.321	0.151	0.055	2.17	100	-0.52	99	5.4	-0.1	96	282	74	71
201	29.466	0.145	0.055	2.15	100	0	95	5.4	0.0	96	283	74	71
202	29.617	0.151	0.051	2.15	100	-2.2	103	5.3	-0.1	96	286	74	71
203	29.761	0.144	0.052	2.17	100	-2.09	97	5.3	0.0	96	287	74	71
204	29.912	0.151	0.052	2.15	100	-0.46	102	5.3	0.0	96	287	74	71
205	30.057	0.145	0.050	2.15	100	-1.23	100	5.2	-0.1	96	290	74	71
206	30.207	0.150	0.051	2.19	100	-0.04	102	5.2	0.0	97	294	74	71
207	30.352	0.145	0.051	2.12	100	0	99	5.2	0.0	97	294	74	71
208	30.503	0.151	0.054	2.18	100	-1.1	100	5.1	-0.1	97	291	74	71
209	30.648	0.145	0.051	2.17	100	-0.82	99	5.0	-0.1	97	285	74	71
210	30.798	0.150	0.049	2.16	100	-2.19	104	5.1	0.1	97	284	74	71
211	30.943	0.145	0.051	2.14	100	0	99	5.0	-0.1	97	283	74	71
212	31.092	0.149	0.051	2.19	100	-0.22	101	5.0	0.0	97	282	74	71
213	31.238	0.146	0.053	2.16	100	-0.8	97	5.0	0.0	97	281	74	71
214	31.387	0.149	0.048	2.16	100	-0.38	104	5.0	0.0	96	277	74	71
215	31.534	0.147	0.050	2.16	100	-1.08	101	4.9	-0.1	96	271	74	71
216	31.683	0.149	0.049	2.16	100	0	103	4.9	0.0	96	270	74	71
217	31.829	0.146	0.049	2.18	100	-2.07	101	4.9	0.0	96	271	74	71
218	31.977	0.148	0.056	2.17	100	-2.13	96	4.8	-0.1	96	274	74	71
219	32.124	0.147	0.055	2.17	100	0	96	4.7	-0.1	96	282	74	71
220	32.273	0.149	0.055	2.15	100	-2.41	98	4.8	0.1	96	285	74	71
221	32.420	0.147	0.051	2.16	100	-2.53	100	4.7	-0.1	96	282	74	71
222	32.568	0.148	0.052	2.19	100	-2.66	100	4.7	0.0	96	284	74	71
223	32.717	0.149	0.048	2.18	100	0	104	4.6	-0.1	96	284	74	71
224	32.864	0.147	0.054	2.15	100	-0.09	97	4.6	0.0	96	280	74	71
225	33.013	0.149	0.055	2.18	100	0	98	4.6	0.0	96	275	74	71
226	33.159	0.146	0.052	2.16	100	-1.81	98	4.5	-0.1	96	279	74	71
227	33.308	0.149	0.052	2.14	100	0	100	4.4	-0.1	96	278	74	71
228	33.454	0.146	0.055	2.17	100	-2.38	96	4.5	0.1	96	277	74	71
229	33.603	0.149	0.048	2.16	100	0	104	4.5	0.0	96	275	74	71
230	33.749	0.146	0.052	2.15	100	-2.31	98	4.4	-0.1	96	272	74	71

BOX A TEST DATA - ASTM E2779 / ASTM E2515

Client: Hearth & Home Technologies
Model: P35i-C
Run #: 2

Job #: 19-531
Tracking #: 0046
Technician: SJB
Date: 11/14/2019

	Particulate Sampling Data							Fuel Weight (lb)		Temperature Data (°F)			
Elapsed Time (min)	Gas Meter (ft^3)	Sample Rate (cfm)	Dilution Tunnel dP (in H_2O)	Orifice dH (in H_2O)	Meter Temp (°F)	Meter Vacuum (in Hg)	Pro. Rate (%)	Scale Reading	Weight Change	Dilution Tunnel	Flue	Filter	Ambient
231	33.899	0.150	0.052	2.14	100	-2.27	101	4.4	0.0	96	274	74	71
232	34.044	0.145	0.053	2.16	100	0	97	4.3	-0.1	96	278	74	71
233	34.194	0.150	0.052	2.17	100	-2.69	101	4.3	0.0	96	279	74	71
234	34.339	0.145	0.056	2.15	100	-0.99	94	4.3	0.0	96	284	74	71
235	34.489	0.150	0.050	2.17	100	-2.63	103	4.1	-0.2	97	286	74	71
236	34.633	0.144	0.054	2.18	100	-2.62	95	4.2	0.1	97	284	74	71
237	34.783	0.150	0.054	2.18	100	-0.12	99	4.1	-0.1	97	282	74	71
238	34.928	0.145	0.054	2.16	100	-0.17	96	4.2	0.1	97	280	74	71
239	35.079	0.151	0.051	2.18	100	-0.43	103	4.1	-0.1	97	284	74	71
240	35.223	0.144	0.052	2.19	100	-2.51	97	4.1	0.0	97	288	74	71
241	35.373	0.150	0.053	2.17	100	0	100	3.9	-0.2	97	286	74	71
242	35.518	0.145	0.057	2.16	100	-1.14	93	3.9	0.0	97	284	74	71
243	35.669	0.151	0.052	2.15	100	-2.35	102	4.0	0.1	97	282	74	71
244	35.813	0.144	0.050	2.15	100	0	99	3.9	-0.1	97	280	74	71
245	35.964	0.151	0.050	2.17	100	-1.9	104	3.9	0.0	97	278	74	71
246	36.109	0.145	0.049	2.14	100	0	101	3.8	-0.1	97	278	74	71
247	36.260	0.151	0.048	2.17	100	-2.32	106	3.8	0.0	97	279	74	71
248	36.404	0.144	0.052	2.15	100	-0.69	97	3.7	-0.1	97	281	74	71
249	36.555	0.151	0.055	2.15	100	-2.53	99	3.8	0.1	97	281	74	71
250	36.699	0.144	0.053	2.16	100	-0.99	96	3.7	-0.1	97	281	74	71
251	36.850	0.151	0.053	2.14	100	-1.96	101	3.7	0.0	97	282	74	71
252	36.994	0.144	0.049	2.16	100	0	100	3.6	-0.1	97	282	74	71
253	37.144	0.150	0.057	2.14	100	-0.44	97	3.6	0.0	97	282	74	71
254	37.289	0.145	0.053	2.15	101	-0.03	97	3.6	0.0	97	280	74	71
255	37.439	0.150	0.054	2.17	101	0	99	3.6	0.0	97	280	74	71
256	37.584	0.145	0.054	2.12	101	-1.82	96	3.5	-0.1	97	282	74	71
257	37.735	0.151	0.049	2.16	101	-2.34	105	3.5	0.0	97	285	74	71
258	37.880	0.145	0.054	2.16	101	-0.46	96	3.4	-0.1	97	283	74	71
259	38.029	0.149	0.050	2.15	101	-1.89	102	3.4	0.0	97	280	74	71
260	38.174	0.145	0.051	2.16	101	-2.42	98	3.4	0.0	97	278	74	71
261	38.323	0.149	0.051	2.14	101	-2.44	101	3.4	0.0	97	276	74	71
262	38.469	0.146	0.054	2.16	101	0	96	3.3	-0.1	96	272	74	71
263	38.618	0.149	0.050	2.17	101	-0.45	102	3.2	-0.1	96	271	74	71

BOX A TEST DATA - ASTM E2779 / ASTM E2515

Client: Hearth & Home Technologies
Model: P35i-C
Run #: 2

Job #: 19-531
Tracking #: 0046
Technician: SJB
Date: 11/14/2019

	Particulate Sampling Data							Fuel Weight (lb)		Temperature Data (°F)			
Elapsed Time (min)	Gas Meter (ft^3)	Sample Rate (cfm)	Dilution Tunnel dP (in H_2O)	Orifice dH (in H_2O)	Meter Temp (°F)	Meter Vacuum (in Hg)	Pro. Rate (%)	Scale Reading	Weight Change	Dilution Tunnel	Flue	Filter	Ambient
264	38.764	0.146	0.056	2.14	101	-1.69	95	3.3	0.1	96	271	74	71
265	38.913	0.149	0.052	2.15	101	0	100	3.3	0.0	97	276	74	71
266	39.059	0.146	0.051	2.16	101	-2.61	99	3.2	-0.1	97	286	74	71
267	39.208	0.149	0.051	2.15	101	-2.59	101	3.2	0.0	97	288	74	71
268	39.354	0.146	0.053	2.15	101	-1.33	97	3.1	-0.1	97	290	74	71
269	39.502	0.148	0.052	2.16	101	0	100	3.0	-0.1	97	285	74	71
270	39.649	0.147	0.051	2.16	101	-2.43	100	3.0	0.0	97	283	74	71
271	39.797	0.148	0.050	2.16	101	0	101	3.0	0.0	97	280	74	71
272	39.944	0.147	0.047	2.15	101	-0.85	104	3.0	0.0	97	279	74	71
273	40.092	0.148	0.051	2.13	101	-1.17	100	2.9	-0.1	97	287	74	71
274	40.240	0.148	0.052	2.15	101	-0.5	100	2.8	-0.1	97	290	74	71
275	40.387	0.147	0.053	2.17	101	-0.15	98	2.9	0.1	97	292	74	71
276	40.535	0.148	0.050	2.18	101	-2.1	101	2.7	-0.2	97	287	74	71
277	40.682	0.147	0.049	2.14	101	0	102	2.8	0.1	97	283	74	71
278	40.830	0.148	0.050	2.15	101	-0.77	101	2.7	-0.1	97	284	74	71
279	40.977	0.147	0.051	2.13	101	-1.05	100	2.6	-0.1	97	282	74	71
280	41.125	0.148	0.049	2.15	101	-2.67	103	2.6	0.0	97	281	74	71
281	41.272	0.147	0.054	2.15	101	-2.61	97	2.7	0.1	97	278	74	71
282	41.420	0.148	0.055	2.14	101	-2.53	97	2.7	0.0	97	274	74	71
283	41.566	0.146	0.050	2.16	101	-0.67	100	2.6	-0.1	97	274	74	71
284	41.716	0.150	0.053	2.14	101	-2.38	100	2.6	0.0	97	275	74	71
285	41.862	0.146	0.054	2.16	101	-1.15	96	2.5	-0.1	97	278	74	71
286	42.011	0.149	0.055	2.14	101	-0.83	97	2.5	0.0	97	277	74	71
287	42.156	0.145	0.057	2.17	101	-2.24	93	2.4	-0.1	97	278	74	71
288	42.306	0.150	0.049	2.13	101	-0.71	104	2.5	0.1	97	275	74	71
289	42.451	0.145	0.050	2.15	101	-0.38	99	2.4	-0.1	97	277	74	72
290	42.600	0.149	0.051	2.15	101	-1.65	101	2.3	-0.1	97	281	74	72
291	42.745	0.145	0.048	2.14	101	-2.33	101	2.4	0.1	97	282	74	72
292	42.895	0.150	0.054	2.15	101	-0.08	99	2.4	0.0	97	283	74	72
293	43.040	0.145	0.051	2.14	101	-2.37	98	2.2	-0.2	97	289	74	72
294	43.190	0.150	0.049	2.18	101	-0.46	104	2.1	-0.1	97	297	74	72
295	43.334	0.144	0.051	2.16	101	-0.47	98	2.2	0.1	98	295	74	72
296	43.484	0.150	0.050	2.15	101	0	103	2.2	0.0	98	291	75	72

BOX A TEST DATA - ASTM E2779 / ASTM E2515

Client: Hearth & Home Technologies
Model: P35i-C
Run #: 2

Job #: 19-531
Tracking #: 0046
Technician: SJB
Date: 11/14/2019

	Particulate Sampling Data							Fuel Weight (lb)		Temperature Data (°F)			
Elapsed Time (min)	Gas Meter (ft^3)	Sample Rate (cfm)	Dilution Tunnel dP (in H_2O)	Orifice dH (in H_2O)	Meter Temp (°F)	Meter Vacuum (in Hg)	Pro. Rate (%)	Scale Reading	Weight Change	Dilution Tunnel	Flue	Filter	Ambient
297	43.629	0.145	0.053	2.18	101	-0.09	97	2.1	-0.1	98	291	74	72
298	43.779	0.150	0.051	2.15	101	-0.17	102	2.0	-0.1	98	290	74	72
299	43.923	0.144	0.056	2.17	101	-1.51	93	2.1	0.1	98	285	75	72
300	44.074	0.151	0.055	2.14	101	-2.47	99	2.0	-0.1	97	279	75	72
301	44.218	0.144	0.052	2.14	101	0	97	2.0	0.0	97	274	75	72
302	44.369	0.151	0.056	2.16	101	0	98	2.0	0.0	97	272	75	72
303	44.514	0.145	0.055	2.15	101	0	95	1.9	-0.1	97	273	75	72
304	44.664	0.150	0.050	2.15	101	-0.5	103	1.9	0.0	97	278	75	72
305	44.809	0.145	0.052	2.15	101	-2.58	98	1.9	0.0	97	280	75	72
306	44.959	0.150	0.050	2.13	101	-0.36	103	1.9	0.0	97	280	75	72
307	45.104	0.145	0.052	2.15	101	-0.11	98	1.9	0.0	97	282	75	72
308	45.254	0.150	0.055	2.16	101	-1.07	98	1.8	-0.1	97	285	75	72
309	45.399	0.145	0.048	2.14	101	-0.72	101	1.8	0.0	97	286	75	72
310	45.549	0.150	0.053	2.13	101	-1.82	100	1.7	-0.1	97	286	75	72
311	45.693	0.144	0.048	2.15	101	0	101	1.7	0.0	97	285	75	72
312	45.844	0.151	0.056	2.15	101	-2.57	98	1.6	-0.1	97	281	75	72
313	45.989	0.145	0.051	2.15	101	-1.37	98	1.6	0.0	97	280	75	72
314	46.139	0.150	0.051	2.11	101	-2.49	102	1.6	0.0	97	281	75	72
315	46.284	0.145	0.056	2.16	101	-1.12	94	1.5	-0.1	97	278	75	72
316	46.433	0.149	0.055	2.15	101	0	97	1.4	-0.1	97	278	75	72
317	46.578	0.145	0.051	2.16	101	-0.82	98	1.5	0.1	97	282	75	72
318	46.728	0.150	0.054	2.15	101	-1.22	99	1.5	0.0	97	278	75	72
319	46.873	0.145	0.051	2.18	101	-2.17	98	1.4	-0.1	97	275	75	72
320	47.022	0.149	0.053	2.13	102	-1.12	99	1.4	0.0	97	277	75	72
321	47.167	0.145	0.047	2.16	101	-2.19	103	1.4	0.0	97	276	75	72
322	47.316	0.149	0.054	2.13	101	-0.17	98	1.3	-0.1	97	276	75	72
323	47.463	0.147	0.057	2.17	102	0	94	1.3	0.0	97	281	75	72
324	47.611	0.148	0.055	2.17	102	-0.1	97	1.2	-0.1	97	287	75	72
325	47.757	0.146	0.055	2.18	102	-2.51	95	1.2	0.0	97	291	75	72
326	47.905	0.148	0.047	2.15	102	-0.7	104	1.2	0.0	97	290	75	72
327	48.052	0.147	0.054	2.15	102	-2.35	97	1.1	-0.1	98	287	75	72
328	48.200	0.148	0.061	2.15	102	-1.04	92	1.0	-0.1	97	287	75	72
329	48.347	0.147	0.053	2.15	102	-1.17	98	1.0	0.0	98	288	75	72

BOX A TEST DATA - ASTM E2779 / ASTM E2515

Client: Hearth & Home Technologies
Model: P35i-C
Run #: 2

Job #: 19-531
Tracking #: 0046
Technician: SJB
Date: 11/14/2019

	Particulate Sampling Data							Fuel Weight (lb)		Temperature Data (°F)			
Elapsed Time (min)	Gas Meter (ft^3)	Sample Rate (cfm)	Dilution Tunnel dP (in H_2O)	Orifice dH (in H_2O)	Meter Temp (°F)	Meter Vacuum (in Hg)	Pro. Rate (%)	Scale Reading	Weight Change	Dilution Tunnel	Flue	Filter	Ambient
330	48.494	0.147	0.051	2.14	102	0	100	0.8	-0.2	98	288	75	72
331	48.642	0.148	0.050	2.14	102	0	101	0.9	0.1	98	287	75	72
332	48.790	0.148	0.054	2.13	102	-1.1	98	1.0	0.1	98	284	75	72
333	48.938	0.148	0.051	2.16	102	-1.57	100	0.9	-0.1	98	282	75	72
334	49.085	0.147	0.050	2.17	102	-2.46	101	0.9	0.0	98	277	75	72
335	49.234	0.149	0.050	2.16	102	-0.88	102	0.8	-0.1	97	275	75	72
336	49.381	0.147	0.055	2.18	102	-2.51	96	0.8	0.0	97	278	75	72
337	49.530	0.149	0.049	2.17	102	0	103	0.8	0.0	97	273	75	72
338	49.677	0.147	0.050	2.15	102	-1.14	101	0.8	0.0	97	269	75	72
339	49.826	0.149	0.052	2.17	102	-2.18	100	0.8	0.0	97	269	75	72
340	49.973	0.147	0.052	2.14	102	0	99	0.8	0.0	97	267	75	72
341	50.122	0.149	0.052	2.19	102	0	100	0.6	-0.2	97	268	75	72
342	50.268	0.146	0.051	2.18	102	-2.74	99	0.7	0.1	97	270	75	72
343	50.418	0.150	0.052	2.16	102	-2.64	101	0.6	-0.1	96	273	75	72
344	50.563	0.145	0.053	2.19	102	-0.32	96	0.5	-0.1	97	276	75	72
345	50.713	0.150	0.051	2.13	102	-0.39	102	0.6	0.1	97	278	75	72
346	50.859	0.146	0.050	2.17	102	0	100	0.5	-0.1	97	280	75	72
347	51.009	0.150	0.048	2.17	102	-1.94	105	0.5	0.0	97	289	75	72
348	51.154	0.145	0.052	2.18	102	0	97	0.4	-0.1	97	298	75	72
349	51.304	0.150	0.057	2.19	102	-2.58	96	0.3	-0.1	98	296	75	72
350	51.449	0.145	0.051	2.14	102	-0.08	98	0.4	0.1	98	292	75	72
351	51.601	0.152	0.051	2.17	102	-0.23	103	0.3	-0.1	98	288	75	72
352	51.746	0.145	0.051	2.17	102	-2.3	98	0.3	0.0	98	284	75	72
353	51.897	0.151	0.052	2.16	102	-2.4	101	0.3	0.0	97	282	75	72
354	52.042	0.145	0.049	2.13	102	-2.06	100	0.3	0.0	97	280	75	72
355	52.193	0.151	0.053	2.17	102	-2.49	100	0.2	-0.1	98	282	75	72
356	52.338	0.145	0.053	2.17	102	-2.56	96	0.2	0.0	98	285	75	72
357	52.488	0.150	0.052	2.17	102	-2.49	101	0.2	0.0	98	288	75	72
358	52.634	0.146	0.053	2.15	102	-0.76	97	0.0	-0.2	98	290	75	72
359	52.784	0.150	0.053	2.17	102	-2.46	100	0.1	0.1	98	290	75	72
360	52.930	0.146	0.055	2.18	102	-1.81	95	0.0	-0.1	98	285	75	72
Avg/Tot	52.930	0.147	0.052	2.16	95	-1.15	100			99	322	73	71

BOX B TEST DATA - ASTM E2779 / ASTM E2515

Client: Hearth & Home Technologies
Model: P35i-C
Run #: 2

Job #: 19-531
Tracking #: 0046
Technician: SJB
Date: 11/14/2019

	Particulate Sampling Data							Flue Gas Data		
Elapsed Time (min)	Gas Meter (ft^3)	Sample Rate (cfm)	Orifice dH (in H_2O)	Meter Temp (°F)	Meter Vacuum (in Hg)	Pro. Rate (%)	Filter (°F)	Flue Draft (in H_2O)	CO_2 (%)	CO (%)
0	0.000		0.00	70	-1		69	0.000	8.62	0.01
1	0.137	0.137	2.25	70	-2.89	98	70	-0.070	8.74	0.06
2	0.280	0.143	2.24	70	-2.97	103	71	-0.070	8.62	0.00
3	0.423	0.143	2.24	70	-3.08	104	71	-0.050	8.76	0.02
4	0.569	0.146	2.23	71	-1.6	105	71	-0.030	9.71	0.06
5	0.711	0.142	2.22	71	-0.91	101	72	-0.030	9.28	0.01
6	0.857	0.146	2.23	71	-2.55	107	72	-0.120	10.34	0.05
7	0.999	0.142	2.22	71	-2.69	104	72	-0.100	9.56	0.07
8	1.144	0.145	2.21	71	-2.02	109	72	-0.060	9.69	0.00
9	1.285	0.141	2.19	72	-0.68	99	72	-0.100	8.80	0.05
10	1.430	0.145	2.20	72	-0.96	110	72	-0.070	8.70	0.04
11	1.571	0.141	2.21	72	-3.2	102	73	-0.060	9.11	0.00
12	1.717	0.146	2.22	72	-2.97	108	73	-0.070	7.96	0.03
13	1.859	0.142	2.20	73	-3.13	105	73	-0.070	7.81	0.04
14	2.004	0.145	2.24	73	-1.2	106	73	-0.060	7.90	0.00
15	2.146	0.142	2.20	73	-3.07	103	73	-0.070	7.62	0.01
16	2.290	0.144	2.22	74	-2.96	102	73	-0.060	7.56	0.04
17	2.433	0.143	2.20	74	-2.41	107	73	-0.080	8.02	0.02
18	2.575	0.142	2.22	74	-0.66	101	74	-0.060	9.03	0.00
19	2.720	0.145	2.19	75	-3.02	107	74	-0.060	9.07	0.03
20	2.861	0.141	2.21	75	-2.1	101	74	-0.080	9.73	0.07
21	3.007	0.146	2.21	76	-2.17	104	74	-0.090	9.50	0.06
22	3.149	0.142	2.18	76	-1.36	107	74	-0.090	9.23	0.03
23	3.294	0.145	2.18	76	-2.57	100	74	-0.060	8.49	0.02
24	3.435	0.141	2.17	77	-3.13	100	74	-0.070	9.46	0.01
25	3.581	0.146	2.16	77	-1.72	105	74	-0.070	9.52	0.06
26	3.721	0.140	2.20	77	-1.06	100	74	-0.080	10.57	0.12
27	3.867	0.146	2.18	78	-0.94	107	74	-0.070	9.84	0.06
28	4.009	0.142	2.19	78	-0.88	104	75	-0.080	9.89	0.03
29	4.155	0.146	2.19	79	-1.92	105	75	-0.110	9.54	0.01
30	4.297	0.142	2.19	79	-2.98	107	75	-0.080	8.96	0.04
31	4.441	0.144	2.19	79	-2.92	100	75	-0.080	9.28	0.08

BOX B TEST DATA - ASTM E2779 / ASTM E2515

Client: Hearth & Home Technologies
Model: P35i-C
Run #: 2

Job #: 19-531
Tracking #: 0046
Technician: SJB
Date: 11/14/2019

	Particulate Sampling Data							Flue Gas Data		
Elapsed Time (min)	Gas Meter (ft^3)	Sample Rate (cfm)	Orifice dH (in H_2O)	Meter Temp (°F)	Meter Vacuum (in Hg)	Pro. Rate (%)	Filter (°F)	Flue Draft (in H_2O)	CO_2 (%)	CO (%)
32	4.584	0.143	2.18	80	-0.53	103	75	-0.060	8.84	0.01
33	4.726	0.142	2.18	80	-2.97	104	75	-0.100	7.69	0.04
34	4.871	0.145	2.16	81	-3.11	102	75	-0.090	8.25	0.01
35	5.013	0.142	2.16	81	-0.63	100	75	-0.050	8.58	0.00
36	5.159	0.146	2.18	81	-2.69	107	75	-0.050	7.73	0.00
37	5.302	0.143	2.18	82	-3.06	104	75	-0.070	7.65	0.00
38	5.448	0.146	2.19	82	-2.99	105	75	-0.090	8.06	0.00
39	5.589	0.141	2.19	82	-0.54	101	75	-0.090	8.43	0.05
40	5.736	0.147	2.17	83	-0.64	105	75	-0.090	8.32	0.00
41	5.876	0.140	2.18	83	-3.05	101	75	-0.100	8.22	0.02
42	6.023	0.147	2.16	83	-3.12	107	75	-0.090	8.00	0.00
43	6.165	0.142	2.17	84	-1.68	102	75	-0.100	8.19	0.00
44	6.311	0.146	2.16	84	-1.51	108	75	-0.050	8.42	0.01
45	6.453	0.142	2.19	85	-1.36	99	75	-0.100	9.00	0.02
46	6.600	0.147	2.17	85	-0.99	103	76	-0.060	8.84	0.01
47	6.743	0.143	2.16	85	-0.59	103	76	-0.060	10.76	0.27
48	6.887	0.144	2.18	86	-0.98	99	76	-0.040	10.15	0.16
49	7.031	0.144	2.17	86	-1.35	102	76	-0.070	10.21	0.10
50	7.175	0.144	2.17	86	-0.68	100	76	-0.040	9.62	0.03
51	7.319	0.144	2.15	86	-0.82	100	76	-0.090	9.06	0.03
52	7.462	0.143	2.17	87	-1.11	108	76	-0.070	9.49	0.09
53	7.608	0.146	2.15	87	-3.07	104	76	-0.040	9.92	0.11
54	7.750	0.142	2.15	87	-0.99	99	76	-0.070	9.10	0.04
55	7.897	0.147	2.18	88	-2.57	108	76	-0.090	9.12	0.03
56	8.039	0.142	2.16	88	-0.67	101	76	-0.070	7.99	0.00
57	8.186	0.147	2.15	88	-2.85	103	76	-0.080	8.67	0.01
58	8.327	0.141	2.17	88	-0.69	98	76	-0.080	7.68	0.00
59	8.474	0.147	2.15	89	-2.4	102	76	-0.080	7.07	0.01
60	8.616	0.142	2.15	89	-0.67	99	76	-0.110	7.08	0.00
61	8.762	0.146	2.15	89	-0.99	108	76	-0.060	7.77	0.00
62	8.904	0.142	2.15	89	-0.61	100	76	-0.060	6.26	0.00
63	9.051	0.147	2.15	90	-0.71	102	76	-0.080	4.33	0.02

BOX B TEST DATA - ASTM E2779 / ASTM E2515

Client: Hearth & Home Technologies
Model: P35i-C
Run #: 2

Job #: 19-531
Tracking #: 0046
Technician: SJB
Date: 11/14/2019

	Particulate Sampling Data							Flue Gas Data		
Elapsed Time (min)	Gas Meter (ft^3)	Sample Rate (cfm)	Orifice dH (in H_2O)	Meter Temp (°F)	Meter Vacuum (in Hg)	Pro. Rate (%)	Filter (°F)	Flue Draft (in H_2O)	CO_2 (%)	CO (%)
64	9.194	0.143	2.13	90	-0.97	103	76	-0.070	3.01	0.01
65	9.340	0.146	2.16	90	-3.08	102	76	-0.050	3.06	0.00
66	9.483	0.143	2.14	91	-0.66	104	76	-0.070	2.84	0.01
67	9.630	0.147	2.14	91	-0.66	102	76	-0.030	2.51	0.01
68	9.773	0.143	2.14	91	-2.81	101	76	-0.060	2.15	0.02
69	9.918	0.145	2.16	91	-0.77	103	76	-0.070	2.28	0.02
70	10.062	0.144	2.16	91	-0.53	103	76	-0.050	2.26	0.03
71	10.207	0.145	2.14	91	-0.45	102	76	-0.070	2.41	0.03
72	10.352	0.145	2.16	92	-1.24	103	76	-0.050	2.60	0.02
73	10.495	0.143	2.14	92	-0.57	99	76	-0.050	1.99	0.03
74	10.641	0.146	2.14	92	-0.65	100	76	-0.070	2.59	0.00
75	10.784	0.143	2.15	92	-1.32	100	76	-0.060	2.64	0.03
76	10.931	0.147	2.15	93	-2.39	105	76	-0.080	3.12	0.03
77	11.074	0.143	2.13	93	-0.81	105	76	-0.040	3.45	0.06
78	11.221	0.147	2.15	93	-1.78	105	76	-0.040	3.35	0.03
79	11.364	0.143	2.14	93	-0.8	98	76	-0.090	3.04	0.06
80	11.512	0.148	2.16	93	-2.19	101	76	-0.080	3.19	0.00
81	11.654	0.142	2.14	93	-0.56	100	76	-0.070	3.69	0.05
82	11.801	0.147	2.16	94	-2.73	100	76	-0.060	3.14	0.01
83	11.943	0.142	2.12	94	-2	99	76	-0.050	3.24	0.04
84	12.091	0.148	2.14	94	-0.92	104	76	-0.040	3.38	0.00
85	12.233	0.142	2.15	94	-1.29	97	76	-0.060	3.58	0.02
86	12.380	0.147	2.14	94	-1.02	104	75	-0.030	3.24	0.00
87	12.522	0.142	2.12	94	-3.11	97	76	-0.060	3.32	0.02
88	12.669	0.147	2.17	95	-0.55	102	76	-0.060	4.85	0.00
89	12.812	0.143	2.15	95	-0.77	102	76	-0.040	3.83	0.02
90	12.960	0.148	2.16	95	-0.74	101	76	-0.050	3.22	0.03
91	13.103	0.143	2.15	95	-0.63	100	76	-0.050	3.34	0.00
92	13.250	0.147	2.17	95	-1.25	100	76	-0.120	3.87	0.00
93	13.393	0.143	2.14	95	-2.77	98	76	-0.110	4.28	0.02
94	13.540	0.147	2.14	95	-0.73	100	76	-0.060	3.91	0.00
95	13.684	0.144	2.15	95	-3.02	100	76	-0.080	4.05	0.02

BOX B TEST DATA - ASTM E2779 / ASTM E2515

Client: Hearth & Home Technologies
Model: P35i-C
Run #: 2

Job #: 19-531
Tracking #: 0046
Technician: SJB
Date: 11/14/2019

	Particulate Sampling Data							Flue Gas Data		
Elapsed Time (min)	Gas Meter (ft^3)	Sample Rate (cfm)	Orifice dH (in H_2O)	Meter Temp (°F)	Meter Vacuum (in Hg)	Pro. Rate (%)	Filter (°F)	Flue Draft (in H_2O)	CO_2 (%)	CO (%)
96	13.831	0.147	2.13	96	-1.64	104	76	-0.040	3.58	0.00
97	13.975	0.144	2.13	96	-2.97	97	76	-0.080	3.53	0.03
98	14.120	0.145	2.14	96	-0.57	99	76	-0.070	3.59	0.00
99	14.265	0.145	2.15	96	-1.33	101	76	-0.040	4.28	0.00
100	14.410	0.145	2.14	96	-2.32	98	75	-0.080	3.65	0.00
101	14.556	0.146	2.16	96	-2.03	102	75	-0.040	3.14	0.01
102	14.700	0.144	2.13	96	-2.82	100	75	-0.050	3.32	0.03
103	14.846	0.146	2.13	96	-2.93	98	75	-0.070	3.41	0.02
104	14.989	0.143	2.15	97	-2.99	101	75	-0.020	3.22	0.00
105	15.136	0.147	2.15	97	-1.38	105	75	-0.050	3.57	0.00
106	15.280	0.144	2.15	97	-1.74	100	75	-0.040	3.17	0.01
107	15.427	0.147	2.15	97	-1.31	102	75	-0.060	2.81	0.02
108	15.570	0.143	2.12	97	-2.69	99	75	-0.070	3.31	0.01
109	15.717	0.147	2.15	97	-1.61	101	75	-0.030	3.49	0.00
110	15.861	0.144	2.15	97	-0.83	100	75	-0.030	3.28	0.01
111	16.009	0.148	2.15	97	-1.29	101	75	-0.080	3.15	0.01
112	16.152	0.143	2.16	97	-0.61	101	75	-0.040	3.46	0.02
113	16.299	0.147	2.12	97	-1.09	104	75	-0.060	2.91	0.00
114	16.442	0.143	2.14	98	-1.47	98	75	-0.050	2.72	0.01
115	16.590	0.148	2.15	98	-1.39	103	75	-0.040	3.18	0.01
116	16.733	0.143	2.13	98	-1.39	98	75	-0.040	2.80	0.01
117	16.880	0.147	2.14	98	-3.19	104	75	-0.050	2.96	0.00
118	17.023	0.143	2.14	98	-2.53	95	75	-0.030	3.17	0.00
119	17.171	0.148	2.13	98	-1.56	103	75	-0.010	3.45	0.00
120	17.313	0.142	2.14	98	-1.1	106	75	-0.070	3.14	0.05
121	17.460	0.147	2.14	98	-3.11	103	75	-0.020	3.09	0.00
122	17.603	0.143	2.13	98	-2.83	101	75	-0.060	3.39	0.00
123	17.751	0.148	2.15	98	-2.09	103	76	-0.090	3.70	0.01
124	17.894	0.143	2.13	98	-0.61	102	76	-0.030	3.73	0.01
125	18.042	0.148	2.13	98	-2.6	102	76	-0.070	3.88	0.02
126	18.185	0.143	2.12	99	-1.07	94	75	-0.030	3.80	0.00
127	18.332	0.147	2.15	99	-2.57	96	76	-0.080	3.42	0.03

BOX B TEST DATA - ASTM E2779 / ASTM E2515

Client: Hearth & Home Technologies
Model: P35i-C
Run #: 2

Job #: 19-531
Tracking #: 0046
Technician: SJB
Date: 11/14/2019

	Particulate Sampling Data							Flue Gas Data		
Elapsed Time (min)	Gas Meter (ft^3)	Sample Rate (cfm)	Orifice dH (in H_2O)	Meter Temp (°F)	Meter Vacuum (in Hg)	Pro. Rate (%)	Filter (°F)	Flue Draft (in H_2O)	CO_2 (%)	CO (%)
128	18.476	0.144	2.15	99	-0.67	95	76	-0.080	3.88	0.00
129	18.623	0.147	2.14	99	-2.56	100	75	-0.060	3.81	0.02
130	18.767	0.144	2.14	99	-2.52	98	76	-0.020	3.54	0.02
131	18.913	0.146	2.12	99	-2.88	105	75	-0.030	3.59	0.00
132	19.058	0.145	2.14	99	-3.02	98	76	-0.060	3.52	0.04
133	19.203	0.145	2.15	99	-0.56	99	76	-0.050	4.63	0.01
134	19.348	0.145	2.15	99	-2.95	98	76	-0.100	4.17	0.00
135	19.493	0.145	2.12	99	-2.84	99	76	-0.070	4.20	0.01
136	19.639	0.146	2.13	99	-1.55	103	76	-0.070	3.42	0.00
137	19.783	0.144	2.14	99	-0.88	100	76	-0.010	3.22	0.02
138	19.929	0.146	2.12	99	-2.89	104	76	-0.090	3.28	0.02
139	20.072	0.143	2.13	99	-1.61	98	76	-0.080	3.66	0.00
140	20.219	0.147	2.13	99	-1.5	102	76	-0.080	3.70	0.00
141	20.363	0.144	2.13	100	-2.62	101	76	-0.040	3.63	0.00
142	20.510	0.147	2.12	100	-2.85	100	76	-0.100	4.15	0.00
143	20.654	0.144	2.14	100	-3.06	99	76	-0.050	4.10	0.00
144	20.800	0.146	2.14	100	-0.7	100	76	-0.080	3.92	0.00
145	20.944	0.144	2.13	100	-2.29	100	76	-0.050	4.13	0.03
146	21.092	0.148	2.14	100	-1.11	101	76	-0.050	4.25	0.00
147	21.235	0.143	2.13	100	-2.61	105	76	-0.080	3.81	0.00
148	21.383	0.148	2.14	100	-2.4	101	76	-0.060	3.40	0.01
149	21.525	0.142	2.14	100	-1.02	100	76	-0.050	3.47	0.01
150	21.673	0.148	2.12	100	-0.65	105	76	-0.100	3.46	0.02
151	21.816	0.143	2.13	100	-2.45	99	76	-0.070	3.12	0.01
152	21.964	0.148	2.13	100	-1.33	104	76	-0.070	3.31	0.00
153	22.106	0.142	2.11	100	-2.59	98	76	-0.070	2.76	0.03
154	22.254	0.148	2.13	100	-0.55	103	76	0.010	3.33	0.02
155	22.396	0.142	2.13	100	-0.73	101	76	-0.030	4.32	0.00
156	22.544	0.148	2.13	100	-1.36	100	76	-0.050	3.52	0.01
157	22.686	0.142	2.14	100	-2.35	98	76	-0.070	3.73	0.02
158	22.834	0.148	2.12	100	-2.18	107	76	-0.060	3.89	0.00
159	22.977	0.143	2.14	100	-1.11	100	76	-0.040	3.67	0.00

BOX B TEST DATA - ASTM E2779 / ASTM E2515

Client: Hearth & Home Technologies
Model: P35i-C
Run #: 2

Job #: 19-531
Tracking #: 0046
Technician: SJB
Date: 11/14/2019

	Particulate Sampling Data							Flue Gas Data		
Elapsed Time (min)	Gas Meter (ft^3)	Sample Rate (cfm)	Orifice dH (in H_2O)	Meter Temp (°F)	Meter Vacuum (in Hg)	Pro. Rate (%)	Filter (°F)	Flue Draft (in H_2O)	CO_2 (%)	CO (%)
160	23.125	0.148	2.13	100	-0.64	100	76	-0.040	3.85	0.01
161	23.268	0.143	2.11	101	-0.95	100	76	-0.080	3.54	0.00
162	23.415	0.147	2.11	101	-1.93	98	76	-0.050	3.36	0.00
163	23.559	0.144	2.13	101	-2.77	97	76	-0.090	3.60	0.01
164	23.706	0.147	2.13	101	-2.64	99	76	-0.030	3.57	0.00
165	23.850	0.144	2.14	101	-2.05	100	76	-0.070	3.93	0.02
166	23.996	0.146	2.11	101	-1.73	97	76	-0.040	4.69	0.00
167	24.140	0.144	2.13	101	-1.37	102	76	-0.060	4.11	0.02
168	24.285	0.145	2.13	101	-0.67	102	76	-0.050	4.19	0.00
169	24.431	0.146	2.11	101	-0.63	103	76	-0.110	4.12	0.01
170	24.575	0.144	2.14	101	-1.32	100	76	-0.090	4.01	0.00
171	24.721	0.146	2.11	101	-0.65	98	76	-0.020	4.08	0.00
172	24.865	0.144	2.11	101	-0.67	100	76	-0.090	3.96	0.00
173	25.011	0.146	2.12	101	-1.9	103	76	-0.110	4.29	0.00
174	25.154	0.143	2.12	101	-3.06	103	76	-0.060	3.75	0.00
175	25.301	0.147	2.14	101	-2.23	100	76	-0.040	3.34	0.02
176	25.445	0.144	2.13	101	-2.55	97	76	-0.060	3.53	0.00
177	25.592	0.147	2.13	101	-2.48	99	76	-0.010	3.52	0.00
178	25.735	0.143	2.12	101	-1.65	97	76	-0.050	2.99	0.00
179	25.882	0.147	2.13	101	-2.53	104	76	-0.090	3.17	0.02
180	26.026	0.144	2.11	101	-1.46	103	76	-0.060	3.50	0.00
181	26.174	0.148	2.12	101	-3.05	105	76	-0.110	3.20	0.00
182	26.316	0.142	2.13	101	-0.94	97	76	-0.040	3.24	0.00
183	26.463	0.147	2.14	101	-1.27	101	76	-0.090	3.50	0.03
184	26.606	0.143	2.11	101	-3.09	100	76	-0.050	2.96	0.02
185	26.754	0.148	2.12	101	-2.77	101	76	-0.040	2.67	0.00
186	26.896	0.142	2.11	101	-1.93	102	76	-0.070	2.66	0.00
187	27.043	0.147	2.12	101	-0.69	99	76	-0.040	2.51	0.00
188	27.186	0.143	2.11	101	-2.46	96	76	-0.050	2.42	0.00
189	27.333	0.147	2.11	101	-0.47	100	76	-0.070	2.37	0.03
190	27.475	0.142	2.11	101	-1.29	99	76	-0.040	2.44	0.02
191	27.623	0.148	2.10	101	-3.18	98	76	-0.040	2.34	0.03

BOX B TEST DATA - ASTM E2779 / ASTM E2515

Client: Hearth & Home Technologies
Model: P35i-C
Run #: 2

Job #: 19-531
Tracking #: 0046
Technician: SJB
Date: 11/14/2019

	Particulate Sampling Data							Flue Gas Data		
Elapsed Time (min)	Gas Meter (ft^3)	Sample Rate (cfm)	Orifice dH (in H_2O)	Meter Temp (°F)	Meter Vacuum (in Hg)	Pro. Rate (%)	Filter (°F)	Flue Draft (in H_2O)	CO_2 (%)	CO (%)
192	27.766	0.143	2.12	101	-0.67	100	76	-0.010	2.32	0.00
193	27.913	0.147	2.12	102	-2.9	100	76	-0.060	2.08	0.02
194	28.056	0.143	2.12	102	-3.07	102	76	-0.060	1.90	0.02
195	28.203	0.147	2.12	102	-3.09	97	76	-0.060	1.71	0.01
196	28.348	0.145	2.12	102	-2.28	100	76	-0.070	2.22	0.02
197	28.494	0.146	2.15	102	-1.69	100	76	-0.070	2.59	0.02
198	28.638	0.144	2.11	102	-0.82	101	76	-0.060	2.80	0.00
199	28.783	0.145	2.11	102	-1.08	99	76	-0.070	3.11	0.00
200	28.928	0.145	2.13	102	-0.98	97	76	-0.040	3.49	0.00
201	29.073	0.145	2.09	102	-2.9	97	76	-0.060	2.80	0.02
202	29.218	0.145	2.11	102	-1.85	101	76	-0.090	3.49	0.00
203	29.362	0.144	2.13	102	-1.93	99	76	-0.040	3.19	0.00
204	29.507	0.145	2.10	102	-3.24	100	76	-0.060	2.84	0.02
205	29.651	0.144	2.11	102	-2.97	101	76	-0.110	3.08	0.01
206	29.797	0.146	2.11	102	-2.22	101	76	-0.050	3.75	0.00
207	29.941	0.144	2.12	102	-0.85	100	76	-0.060	3.29	0.00
208	30.088	0.147	2.11	102	-1.45	99	76	-0.030	3.08	0.00
209	30.231	0.143	2.12	102	-1.77	99	76	-0.090	2.44	0.01
210	30.378	0.147	2.11	102	-2.56	104	76	-0.050	2.43	0.00
211	30.521	0.143	2.11	102	-0.66	99	76	-0.060	2.79	0.00
212	30.669	0.148	2.12	102	-0.58	103	76	-0.060	2.56	0.02
213	30.811	0.142	2.10	102	-0.82	97	76	-0.070	2.64	0.00
214	30.958	0.147	2.10	102	-3.04	105	76	-0.040	2.48	0.00
215	31.101	0.143	2.09	102	-1.89	100	76	-0.040	2.02	0.00
216	31.248	0.147	2.09	102	-2.52	104	76	-0.030	2.17	0.03
217	31.390	0.142	2.09	102	-0.46	100	76	-0.060	2.38	0.00
218	31.537	0.147	2.10	102	-0.49	97	76	-0.040	2.78	0.02
219	31.679	0.142	2.09	102	-3.01	95	76	-0.060	3.12	0.01
220	31.826	0.147	2.11	102	-1.19	98	76	-0.060	3.54	0.00
221	31.969	0.143	2.11	102	-1.8	99	76	-0.010	2.81	0.01
222	32.115	0.146	2.12	102	-2.26	100	76	-0.100	2.52	0.01
223	32.259	0.144	2.11	102	-0.68	103	76	-0.050	2.91	0.00

BOX B TEST DATA - ASTM E2779 / ASTM E2515

Client: Hearth & Home Technologies
Model: P35i-C
Run #: 2

Job #: 19-531
Tracking #: 0046
Technician: SJB
Date: 11/14/2019

	Particulate Sampling Data							Flue Gas Data		
Elapsed Time (min)	Gas Meter (ft^3)	Sample Rate (cfm)	Orifice dH (in H_2O)	Meter Temp (°F)	Meter Vacuum (in Hg)	Pro. Rate (%)	Filter (°F)	Flue Draft (in H_2O)	CO_2 (%)	CO (%)
224	32.405	0.146	2.11	102	-2.29	98	76	0.010	2.54	0.00
225	32.549	0.144	2.12	102	-2.7	96	76	-0.070	2.25	0.00
226	32.695	0.146	2.10	102	-3.12	100	76	-0.050	2.66	0.00
227	32.839	0.144	2.12	102	-2.73	99	76	-0.050	2.89	0.00
228	32.983	0.144	2.13	102	-1.71	96	76	-0.070	2.55	0.03
229	33.128	0.145	2.11	102	-3.17	104	76	-0.080	2.67	0.00
230	33.272	0.144	2.13	102	-0.76	99	76	-0.120	2.17	0.01
231	33.417	0.145	2.08	102	-0.58	100	76	-0.040	2.34	0.01
232	33.560	0.143	2.11	102	-1.94	97	76	-0.040	2.84	0.01
233	33.707	0.147	2.10	102	-2.4	101	76	-0.070	2.85	0.02
234	33.850	0.143	2.11	102	-1.88	95	76	-0.070	3.10	0.04
235	33.996	0.146	2.09	102	-2.89	102	76	-0.010	3.06	0.00
236	34.139	0.143	2.10	102	-1.46	96	76	-0.050	2.82	0.01
237	34.286	0.147	2.11	102	-3.01	99	76	-0.050	2.82	0.00
238	34.428	0.142	2.08	102	-2.9	96	76	-0.080	2.41	0.02
239	34.575	0.147	2.12	102	-1.18	102	76	-0.090	3.07	0.00
240	34.717	0.142	2.10	102	-2.69	98	76	-0.040	3.49	0.00
241	34.864	0.147	2.10	102	-0.89	100	76	-0.060	3.02	0.00
242	35.006	0.142	2.09	102	-2.17	93	76	-0.030	2.65	0.00
243	35.152	0.146	2.08	102	-1.73	100	76	-0.010	2.76	0.00
244	35.295	0.143	2.08	102	-1.16	100	76	-0.060	2.42	0.00
245	35.441	0.146	2.11	102	-1.29	102	76	-0.040	2.50	0.00
246	35.584	0.143	2.09	102	-2.48	101	76	-0.070	2.47	0.00
247	35.730	0.146	2.08	103	-3.1	104	76	-0.040	2.61	0.01
248	35.874	0.144	2.08	103	-2.47	99	76	-0.070	2.63	0.00
249	36.019	0.145	2.06	103	-2.75	97	76	-0.010	2.90	0.01
250	36.162	0.143	2.09	103	-0.57	97	76	-0.050	2.70	0.00
251	36.307	0.145	2.09	103	-2.36	99	76	-0.060	2.91	0.00
252	36.451	0.144	2.08	103	-2.94	102	76	-0.040	2.94	0.00
253	36.594	0.143	2.08	103	-3.21	94	76	-0.060	2.85	0.00
254	36.739	0.145	2.10	103	-3.07	99	76	-0.130	2.59	0.01
255	36.882	0.143	2.08	103	-1.71	96	76	-0.050	2.57	0.00

BOX B TEST DATA - ASTM E2779 / ASTM E2515

Client: Hearth & Home Technologies
Model: P35i-C
Run #: 2

Job #: 19-531
Tracking #: 0046
Technician: SJB
Date: 11/14/2019

	Particulate Sampling Data							Flue Gas Data		
Elapsed Time (min)	Gas Meter (ft^3)	Sample Rate (cfm)	Orifice dH (in H_2O)	Meter Temp (°F)	Meter Vacuum (in Hg)	Pro. Rate (%)	Filter (°F)	Flue Draft (in H_2O)	CO_2 (%)	CO (%)
256	37.029	0.147	2.10	103	-2.04	99	76	-0.020	2.94	0.00
257	37.171	0.142	2.11	103	-3.17	100	76	-0.040	3.20	0.02
258	37.317	0.146	2.09	103	-1.84	98	76	-0.050	2.68	0.00
259	37.460	0.143	2.08	103	-0.86	100	76	-0.040	2.52	0.01
260	37.606	0.146	2.09	103	-2.12	101	76	-0.040	2.43	0.00
261	37.747	0.141	2.09	103	-2.19	98	76	-0.010	2.75	0.00
262	37.894	0.147	2.09	103	-2.55	99	76	-0.060	2.20	0.00
263	38.035	0.141	2.07	103	-2.6	99	76	-0.030	2.33	0.02
264	38.181	0.146	2.10	103	-0.82	96	76	-0.100	2.41	0.00
265	38.323	0.142	2.09	103	-0.69	97	76	-0.110	2.77	0.03
266	38.469	0.146	2.06	103	-2.3	101	76	-0.040	3.55	0.00
267	38.612	0.143	2.08	103	-1.38	99	76	-0.050	3.64	0.00
268	38.758	0.146	2.09	103	-0.77	99	76	-0.060	3.20	0.00
269	38.900	0.142	2.07	103	-0.65	97	76	-0.060	2.73	0.00
270	39.044	0.144	2.07	103	-2.24	100	76	-0.100	2.61	0.00
271	39.188	0.144	2.06	103	-3.17	101	76	-0.060	2.69	0.02
272	39.330	0.142	2.09	103	-2.64	102	76	-0.080	2.42	0.00
273	39.475	0.145	2.07	103	-0.65	100	76	-0.050	3.15	0.02
274	39.618	0.143	2.07	103	-1.93	98	76	-0.080	3.76	0.00
275	39.763	0.145	2.08	103	-0.63	99	76	-0.030	3.28	0.00
276	39.905	0.142	2.10	103	-0.95	99	76	-0.070	2.80	0.00
277	40.052	0.147	2.03	103	-2.01	104	76	-0.100	2.46	0.00
278	40.192	0.140	2.05	103	-2.43	98	76	-0.030	2.55	0.02
279	40.338	0.146	2.06	103	-1.37	101	76	-0.060	2.56	0.00
280	40.479	0.141	2.06	103	-1.29	100	76	-0.060	2.70	0.01
281	40.624	0.145	2.06	103	-0.56	98	76	-0.080	2.61	0.01
282	40.766	0.142	2.06	103	-2.46	95	76	-0.110	2.15	0.00
283	40.911	0.145	2.07	103	-1.97	101	76	-0.110	2.41	0.04
284	41.054	0.143	2.07	103	-1.77	97	76	-0.030	2.69	0.00
285	41.197	0.143	2.06	103	-1.69	96	76	-0.040	2.99	0.00
286	41.340	0.143	2.05	103	-0.7	95	76	0.010	2.35	0.00
287	41.483	0.143	2.11	103	-3.02	94	76	-0.090	2.78	0.00

BOX B TEST DATA - ASTM E2779 / ASTM E2515

Client: Hearth & Home Technologies
Model: P35i-C
Run #: 2

Job #: 19-531
Tracking #: 0046
Technician: SJB
Date: 11/14/2019

	Particulate Sampling Data							Flue Gas Data		
Elapsed Time (min)	Gas Meter (ft^3)	Sample Rate (cfm)	Orifice dH (in H_2O)	Meter Temp (°F)	Meter Vacuum (in Hg)	Pro. Rate (%)	Filter (°F)	Flue Draft (in H_2O)	CO_2 (%)	CO (%)
288	41.628	0.145	2.08	103	-3.15	102	76	-0.050	2.52	0.01
289	41.771	0.143	2.10	103	-2.52	100	76	-0.040	2.72	0.00
290	41.917	0.146	2.10	103	-1.92	101	77	-0.060	2.84	0.01
291	42.061	0.144	2.10	103	-2.91	103	76	-0.030	3.03	0.00
292	42.207	0.146	2.09	103	-2.23	98	76	-0.060	2.89	0.00
293	42.349	0.142	2.09	103	-2.39	98	77	-0.020	3.11	0.00
294	42.497	0.148	2.12	103	-1.04	105	76	-0.080	3.92	0.01
295	42.638	0.141	2.10	103	-1.23	98	76	-0.100	3.43	0.01
296	42.784	0.146	2.07	103	-0.86	102	77	-0.060	2.77	0.00
297	42.926	0.142	2.05	103	-3.07	97	76	-0.040	2.95	0.03
298	43.071	0.145	2.06	103	-2.08	101	76	-0.070	2.95	0.00
299	43.213	0.142	2.08	103	-3.16	94	76	-0.040	2.59	0.01
300	43.359	0.146	2.05	103	-0.9	97	76	-0.050	2.23	0.02
301	43.500	0.141	2.06	103	-1.09	97	76	-0.050	1.92	0.00
302	43.646	0.146	2.03	103	-0.87	97	76	-0.050	2.29	0.02
303	43.788	0.142	2.04	103	-2.77	95	76	-0.050	2.31	0.00
304	43.931	0.143	2.03	103	-3.17	100	77	-0.060	3.04	0.00
305	44.074	0.143	2.04	103	-2.67	98	77	-0.060	2.93	0.00
306	44.215	0.141	2.04	103	-2.89	99	77	-0.050	2.90	0.00
307	44.359	0.144	2.04	103	-1.8	99	77	-0.050	2.95	0.00
308	44.500	0.141	2.04	103	-0.84	94	77	-0.020	3.18	0.01
309	44.645	0.145	2.03	103	-2.94	104	77	-0.070	2.96	0.00
310	44.784	0.139	2.01	103	-3.38	94	77	-0.080	2.79	0.00
311	44.928	0.144	2.01	103	-1.68	103	77	-0.040	2.89	0.00
312	45.068	0.140	2.02	103	-1.5	93	77	-0.080	2.60	0.00
313	45.211	0.143	2.03	103	-3.39	99	77	-0.080	2.43	0.00
314	45.352	0.141	1.98	103	-1.82	98	77	-0.030	2.64	0.00
315	45.493	0.141	1.98	103	-3.02	93	77	-0.060	2.85	0.00
316	45.634	0.141	1.99	103	-0.94	94	77	-0.010	2.27	0.00
317	45.778	0.144	2.11	103	-3.45	100	77	0.000	2.89	0.00
318	45.925	0.147	2.11	103	-2.84	99	77	-0.030	2.76	0.00
319	46.068	0.143	2.15	103	-3.41	99	77	-0.060	2.26	0.01

BOX B TEST DATA - ASTM E2779 / ASTM E2515

Client: Hearth & Home Technologies
Model: P35i-C
Run #: 2

Job #: 19-531
Tracking #: 0046
Technician: SJB
Date: 11/14/2019

	Particulate Sampling Data							Flue Gas Data		
Elapsed Time (min)	Gas Meter (ft^3)	Sample Rate (cfm)	Orifice dH (in H_2O)	Meter Temp (°F)	Meter Vacuum (in Hg)	Pro. Rate (%)	Filter (°F)	Flue Draft (in H_2O)	CO_2 (%)	CO (%)
320	46.215	0.147	2.08	103	-3.35	100	77	-0.070	2.92	0.00
321	46.357	0.142	2.07	103	-1.34	102	77	-0.030	2.45	0.02
322	46.504	0.147	2.07	103	-3.21	99	77	-0.090	2.63	0.00
323	46.644	0.140	2.06	103	-1.29	92	77	-0.080	2.70	0.00
324	46.790	0.146	2.03	103	-1.8	97	77	-0.080	3.88	0.00
325	46.929	0.139	2.00	103	-1.2	93	77	-0.040	3.54	0.04
326	47.074	0.145	2.03	103	-1.19	105	77	-0.070	3.05	0.01
327	47.214	0.140	2.03	103	-3.4	94	77	-0.120	2.71	0.00
328	47.358	0.144	1.99	103	-3.65	91	77	-0.070	2.83	0.00
329	47.498	0.140	1.98	104	-3.23	95	76	-0.050	2.98	0.00
330	47.636	0.138	1.98	104	-3.84	96	76	-0.060	3.02	0.00
331	47.778	0.142	1.94	104	-3.93	99	76	-0.060	2.84	0.00
332	47.916	0.138	1.93	104	-1.53	93	76	-0.050	2.85	0.00
333	48.056	0.140	1.90	104	-3.9	97	76	-0.100	2.69	0.00
334	48.191	0.135	1.86	104	-1.63	94	76	-0.040	2.37	0.02
335	48.327	0.136	1.81	104	-2.46	95	76	-0.050	2.41	0.02
336	48.461	0.134	1.77	104	-3.38	89	76	-0.080	2.70	0.00
337	48.591	0.130	1.73	104	-2.98	92	76	-0.100	2.36	0.00
338	48.722	0.131	1.65	104	-2.2	92	76	-0.020	1.91	0.00
339	48.865	0.143	2.12	104	-3.04	98	76	-0.030	2.41	0.00
340	49.009	0.144	2.10	104	-3.32	99	76	-0.080	2.24	0.00
341	49.153	0.144	2.06	104	-1.79	99	76	-0.010	2.56	0.00
342	49.296	0.143	2.05	104	-2.69	99	76	-0.050	2.51	0.01
343	49.441	0.145	2.04	104	-1.86	99	76	-0.050	2.73	0.00
344	49.582	0.141	2.04	104	-2.62	96	76	-0.060	2.85	0.00
345	49.727	0.145	2.01	104	-3.26	100	76	-0.070	2.74	0.01
346	49.868	0.141	2.05	104	-3.81	98	76	-0.050	2.83	0.00
347	50.012	0.144	2.03	104	-3.96	103	75	-0.050	3.67	0.00
348	50.152	0.140	2.03	104	-1.66	96	75	-0.030	4.36	0.01
349	50.296	0.144	2.04	104	-3.18	94	75	-0.090	3.43	0.00
350	50.438	0.142	2.01	104	-4	98	75	-0.070	2.76	0.01
351	50.580	0.142	2.02	104	-3.43	98	75	-0.050	2.82	0.00

BOX B TEST DATA - ASTM E2779 / ASTM E2515

Client: Hearth & Home Technologies
Model: P35i-C
Run #: 2

Job #: 19-531
Tracking #: 0046
Technician: SJB
Date: 11/14/2019

	Particulate Sampling Data							Flue Gas Data		
Elapsed Time (min)	Gas Meter (ft^3)	Sample Rate (cfm)	Orifice dH (in H_2O)	Meter Temp (°F)	Meter Vacuum (in Hg)	Pro. Rate (%)	Filter (°F)	Flue Draft (in H_2O)	CO_2 (%)	CO (%)
352	50.722	0.142	2.02	104	-3.64	98	75	-0.040	2.37	0.00
353	50.862	0.140	2.00	104	-3.69	96	75	-0.010	2.72	0.00
354	51.006	0.144	1.99	104	-4.06	102	75	-0.070	2.35	0.00
355	51.146	0.140	2.00	104	-3.78	95	75	-0.120	2.86	0.01
356	51.288	0.142	1.98	104	-3.04	96	75	-0.090	2.69	0.02
357	51.425	0.137	1.98	104	-1.8	94	75	-0.020	3.44	0.00
358	51.568	0.143	1.98	104	-2.97	97	75	-0.070	2.94	0.04
359	51.708	0.140	2.04	104	-2.01	95	75	-0.100	3.12	0.02
360	51.851	0.143	2.04	104	-2.96	95	75	-0.030	2.33	0.00
Avg/Tot	51.851	0.144	2.10	97	-1.97	100			4.05	0.01

LAB SAMPLE DATA - ASTM E2515

Client: Hearth & Home Technologies
Model: P35i-C
Run #: 2

Job #: 19-531
Tracking #: 0046
Technician: SJB
Date: 11/14/2019

	Sample ID	Tare, mg	Total, mg	Final, mg	Catch, mg
Train A Filters - First Hour	3622	122.7	122.7	124.1	1.4
Train A Filters - Remainder	3623	116.0	233.1	238.7	5.6
	3624	117.1			
Train A Probe	11A	117036.2	117036.2	117036.4	0.2
Train A O-Rings	11A	3424.1	3424.1	3425.2	1.1
Train B Filters	3625	123.1	239.7	245.8	6.1
	3626	116.6			
Train B Probe	11B	117490.1	117490.1	117490.2	0.1
Train B O-Rings	11B	4234.5	4234.5	4235.4	0.9
Background Filter			0.0	0.0	

Placed in Dessicator on:	11/14 - 16:00

Train A Filters - First Hour	124.0	11/18 7:22	124.1	11/18 14:48				
Train A Filters - Remainder	238.8	11/18 7:22	238.7	11/18 14:48				
Train A Probe	117036.3	11/18 7:22	117036.4	11/18 14:48				
Train A O-Rings	3425.2	11/18 7:23	3425.2	11/18 14:48				
Train B Filters	245.6	11/18 7:23	245.8	11/18 14:48				
Train B Probe	117490.2	11/18 7:23	117490.2	11/18 14:48				
Train B O-Rings	4235.5	11/18 7:23	4235.4	11/18 14:48				
Background Filter								

1st hour Sub-Total, mg:	1.4
Remainder Sub-Total, mg:	6.9
Train 1 Aggregate, mg:	**8.3**
Train 2 Aggregate, mg:	**7.1**
Ambient Aggregate, mg:	0.0

ASTM E2779 Pellet Heater Run Sheets

Client: Hearth & Home Technologies Job Number: 19-531 Tracking #: 0046
Model: P35i-C Run Number: 2 Test Date: 11/14/2019

Pellet Heater Control Settings

High Burn Rate Settings: Temp Setting – 7 / Feed Limit – 5.22

Medium Burn Rate Settings: Temp Setting – 3 / Feed Limit – 2.0

Low Burn Rate Settings: Temp Setting – 1 / Feed Limit – 1.9

Preburn Notes

Preburn Start Time: 8:44

Time	Notes
N/A	N/A

Test Notes

Test Burn Start Time: 9:44

Time	Notes
60 min	Changed 1-hr filter, turned down to medium test control settings.
180 min	Turned down to low test control settings.
360 min	End of Test.

Test Burn End Time: 15:44

Flue Gas Concentration Measurement

Calibration Gas Values: Span Gas CO_2 (%): 17.00 CO (%): 4.31

Mid Gas CO_2 (%): 10.00 CO (%): 2.51

Calibration Results:

	Pre Test			Post Test		
	Zero	Mid	Span	Zero	Mid	Span
Time	9:00	9:05	9:03	16:16	16:18	16:20
CO_2	0.00	10.00	17.00	0.02	10.11	17.03
CO	0.00	2.500	4.310	-0.012	2.489	4.286

Flue Gas Probe Leak Check: Initial: No Leakage Final: No Leakage

Technician Signature: Date: 11/14/2019

ASTM E2515 - Glass Filters

Sample	Weight 1	Weight 2	Weigth 3	Weight 4	Initial	Project	Run
3613	116.0	115.9	-	-	SB	19-524	#3
3614	122.9	122.7	-	-	SB		
3615	123.7	123.8	-	-	SB		
3616	117.2	117.2	-	-	SB		
3617	116.1	116.1	-	-	SB	19-531	#1
3618	122.0	121.9	-	-	SB		
3619	123.1	123.1	-	-	SB		
3620	117.3	117.2	-	-	SB		
3621	123.0	123.1	-	-	SB		
3622	122.7	122.7	-	-	SB	19-531	#2
3623	116.1	116.0	-	-	SB		
3624	117.2	117.1	-	-	SB		
3625	123.1	123.1	-	-	SB		
3626	116.6	116.6	-	-	SB		
3627	121.8	121.8	-	-	SB		
3628	117.5	117.6	-	-	SB		
3629	122.8	122.9	-	-	SB		
3630	122.1	122.1	-	-	SB		

Weight 1 Date/Time:
9/26 · 14:00
Weight 2 Date/Time:
9/27 · 8:00
Weight 3 Date/Time:
Weight 4 Date/Time:

Sample	Weight 1	Weight 2	Weigth 3	Weight 4	Initial	Project	Run
3631	116.2	116.3	-	-	A		
3632	117.6	117.7	-	-	A		
3633	122.9	123.0	-	-	A		
3634	116.0	116.0	-	-	A		
3635	123.3	123.2	-	-	A		
3636	117.1	117.0	-	-	A		
3637	121.8	121.6	-	-	A		
3638	117.0	117.2	-	-	A		
3639	117.0	117.0	-	-	A		
3640	122.5	122.5	-	-	A		
3641	116.3	116.5	-	-	A		
3642	117.4	117.5	-	-	A		
3643	123.3	123.2	-	-	A		
3644	121.6	121.7	-	-	A		
3645	115.4	115.6	-	-	A		
3646	117.5	117.6	-	-	A		
3647	123.6	123.8	-	-	A		
3648	121.8	121.9	-	-	A		

Weight 1 Date/Time:
11/11 11:30
Weight 2 Date/Time:
11/12 12:00
Weight 3 Date/Time:
Weight 4 Date/Time:

ASTM E2515 - Probes

Sample	Weight 1	Weight 2	Weigth 3	Weight 4	Initial	Project	Run
1A	115631.7	115631.8	-	-	JB	19-517	#1
1B	115905.6	115905.8	-	-	JB		
2A	116241.8	116241.8	-	-	JB	19-524	#1
2B	116331.7	116331.6	-	-	JB		
3A	116077.4	116077.4	-	-	JB	19-524	#2
3B	116342.8	116343.0	-	-	JB		
4A	116186.7	116186.8	-	-	JB	19-524	#3
4B	116369.7	116369.7	-	-	JB		
5A	116769.4	116769.6	-	-	JB	19-519	#1
5B	116877.4	116877.5	-	-	JB		

Weight 1 Date/Time:
9/26 - 14:00

Weight 2 Date/Time:
9/30 - 7:30

Weight 3 Date/Time:

Weight 4 Date/Time:

Sample	Weight 1	Weight 2	Weigth 3	Weight 4	Initial	Project	Run
6A	116545.7	116545.9	-	-	JB	19-519	#2
6B	116119.3	116119.4	-	-	JB		
7A	116741.3	116741.4	-	-	JB	19-519	#3
7B	117289.6	117289.4	-	-	JB		
8A	116823.8	116824.0	-	-	JB	19-531	#1
8B	116826.4	116826.6	-	-	JB		
9A	-						
9B	-						
10A	-						
10B	-						

Weight 1 Date/Time:
10/3 7:30

Weight 2 Date/Time:
10/4 - 8:00

Weight 3 Date/Time:

Weight 4 Date/Time:

Sample	Weight 1	Weight 2	Weigth 3	Weight 4	Initial	Project	Run
11A	117036.4	117036.02	-	-	[illegible]	19-531	#2
11B	117490.6	117490.2	117490.1	-	[illegible]		
12A	116889.0	116889.7	-	-	[illegible]		
12B	117957.9	117957.7	-	-	[illegible]		
13A	117456.1	117456.3	-	-	[illegible]		
13B	117054.9	117054.9	-	-	[illegible]		
14A	116818.3	116818.1	116818.0	-	[illegible]		
14B	116772.1	116771.6	116771.6	-	[illegible]		
15A	117418.8	117418.3	117418.3	-	[illegible]		
15B	116905.6	116904.9	116905.1	-	[illegible]		

Weight 1 Date/Time:
11/11 11:30

Weight 2 Date/Time:
11/12 13:00

Weight 3 Date/Time:
11/13 13:00

Weight 4 Date/Time:

ASTM E2515 - O-Rings

Sample	Weight 1	Weight 2	Weigth 3	Weight 4	Initial	Project	Run
1A	3567.9	3567.8	-	-	SB	19-517	#1
1B	3555.8	3555.8	-	-	SB		
2A	3553.5	3553.6	-	-	SB	19-524	#1
2B	3572.2	3572.1	-	-	SB		
3A	3580.9	3580.8	-	-	SB	19-524	#2
3B	3569.1	3569.1	-	-	SB		
4A	3624.6	3624.7	-	-	SB	19-524	#3
4B	3581.0	3581.1	-	-	SB		
5A	3535.9	3535.9	-	-	SB	19-519	#1
5B	3531.9	3531.9	-	-	SB		

Weight 1 Date/Time:
9/26- 14:00
Weight 2 Date/Time:
9/27 - 8:00
Weight 3 Date/Time:
Weight 4 Date/Time:

Sample	Weight 1	Weight 2	Weigth 3	Weight 4	Initial	Project	Run
6A	3616.4	3616.3	-	-	SB	19-519	#2
6B	3397.7	3397.6	-	-	SB		
7A	3573.7	3573.3	-	-	SB	19-519	#3
7B	3522.7	3522.9	-	-	SB		
8A	3552.5	3552.5	-	-	SB	19-531	#1
8B	3586.1	3586.3	-	-	SB		
9A	-						
9B	-						
10A	-						
10B	-						

Weight 1 Date/Time:
10/3 - 7:30
Weight 2 Date/Time:
10/4- 8:00
Weight 3 Date/Time:
Weight 4 Date/Time:

Sample	Weight 1	Weight 2	Weigth 3	Weight 4	Initial	Project	Run
11A	3424.2	3424.1	-	-	A	19-531	#2
11B	4234.4	4234.5	-	-	A		
12A	3396.6	3396.5	-	-	A		
12B	3407.0	3407.1	-	-	A		
13A	3361.3	3361.3	-	-	A		
13B	3446.3	3446.4	-	-	A		
14A	3367.6	3367.7	-	-	A		
14B	3341.8	3341.9	-	-	A		
15A	3569.9	3570.1	-	-	A		
15B	3570.8	3570.8	-	-	A		

Weight 1 Date/Time:
11/1 11:30
Weight 2 Date/Time:
11/2 13:00
Weight 3 Date/Time:
Weight 4 Date/Time:

MODEL / MODÈLE: "P35i-C PELLET INSERT"
Room Heater Pellet Fuel-Burning Type
SUITABLE FOR MOBILE-HOME INSTALLATION
This pellet burning appliance has been tested and listed for use in
Manufactured Homes In accordance with OAR 814-23-900 through 814-23-909

Serial No.
N° de série: HF

BARCODE LABEL

Test réalisés par OMNI-Test Laboratories, Inc., PFS-TECO
Report #/Rapport# 135-S-25-6.2, 0135PN02SS, F19-531
Tested to/Testé à: ASTM E 1509-04, ULC-S627-00, ASTM E 2515-11, ASTM E 2779-10
This pellet burning appliance has been tested and listed for use in
Manufactured Homes in accordance with OAR 814-23-900 through 814-23-909
"PREVENT HOUSE FIRES" Install and use only in accordance with the manufacturer's installation and operation instructions. Contact local building or fire officials about restrictions and inspection in your area.
This wood heater needs periodic inspection and repair for proper operation. Consult the owner's manual for further information. It is against federal regulations to operate this wood heater in a manner inconsistent with the operating instructions in the owner's manual.
WARNING: FOR MANUFACTURED HOMES: Do not install appliance in a sleeping room. An outside combustion air inlet must be provided.
The structural integrity of the manufactured home floor,ceiling and walls must be maintained.
Refer to manufacturer's instructions and local codes for precautions required for passing chimney through a combustible wall or ceiling.
Inspect and clean exhaust venting system frequently in accordance with manufacturer's instructions.
Use a 4" diameter type "PL" venting system, or 4" stainless steel flex as per manual.
Do not connect this unit to a chimney flue servicing another appliance.
FOR USE WITH WOOD PELLET FUEL ONLY.
Input Rating Max: 4.1 lb. fuel/hr.
EPA Certified Emissions: 1.5 g/hr
US ElectricalRating: 115 VAC,60Hz, Start 4.2 AMPS, Run 2.8 AMPS
DANGER: Risk of electrical shock. Disconnect power supply before servicing.
For further instruction refer to owner's manual.
Replace glass only with 5mm ceramic available from your dealer.
OPERATE ONLY WITH DOORS CLOSED.
DANGER: Risque d'électrocution. Débrancher l'appareilavant toute intervention.
Pour une information plus complète, se reporter à la notice d'utilisation.
Ne remplacer la vitre qu'avec une vitre céramique 5 mm de même qualité disponible auprès de votre revendeur.
Tenir la porte frontale et le couvercle de trémie hermétiquement clos durant le fonctionnement de l'appareil.

8390-784_R1

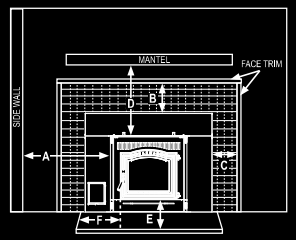

MINIMUM CLEARANCES TO COMBUSTIBLE MATERIAL
ECARTS MINIMUM DE SÉCURITÉ

Location		Inches	Millimeters
A	Insert to combustible sidewall	13	330
B	Surround top to face trim	0	0
C	Surround side to face trim	1	25
D	Insert top to (max) 12" mantel	12	305

Non-combustible floor protector. La protection de sol doit être litre constituée de matériau incombustible

Location		Inches	Millimeters
E	Window opening to front	6	152
F	Window opening to side	6	152

DO NOT OBSTRUCT THE SPACE BENEATH THE HEATER.
MADE IN USA of US and Imported Parts
Fabriqué aux États-Unis-d'Amérique par des pièces d'origine américaine et pièces importées
DO NOT REMOVE THIS LABEL /NE PAS ENLEVER CETTE ÉTIQUETTE

Ce poêle à granules a été testé et homologué pour une utilisation dans
Maisons fabriqués conformément aux OAR 814-23-900 travers 814-23-909
"PRÉVENIR LES INCENDIES HOUSE" Installez et utilisez uniquement en conformité avec installation et d'utilisation les instructions du fabricant. Contactez local building ou d'incendie concernant les restrictions et l'inspection dans votre région.
Ce poêle à bois doit inspection périodique et la réparation pour un fonctionnement correct. Consultez le manuel du propriétaire pour plus d'informations. Ce est contre les règlements fédéraux pour faire fonctionner ce poêle à bois d'une manière incompatible avec les instructions d'utilisation dans le manuel du propriétaire.
AVERTISSEMENT: POUR maisons préfabriquées: Ne pas installer l'appareil dans une chambre à coucher. Une entrée d'air de combustion à l'extérieur doit être fournie.
L'intégrité structurale de la maison étage, plafond et murs fabriqués doit être maintenue.
Reportez-vous aux instructions du fabricant et les codes locaux pour les précautions nécessaires pour faire passer la cheminée à travers un mur ou un plafond combustible.
Inspectez et nettoyez système d'évacuation souvent en conformité avec les instructions du fabricant.
Utilisez un système de ventilation de type "PL" de 4" de diamètre, ou un tuyau flexible en acier inoxydable de 4 "selon les instructions du manuel.
Ne pas connecter cet appareil à un conduit de cheminée desservant un autre appareil.
POUR UTILISATION EN BOIS GRANULES SEULEMENT.
Entrée Max Note: 4.11b. carburant / h.
Émissions certifiés EPA: 1,5 g / h
US ElectricalRating: 115 VAC, 60Hz, Start 4.2 AMPS, Run 2,8 AMPS

CAUTION: HOT WHILE IN OPERATION.KEEP CHILDREN AND CLOTHING AWAY.CONTACT MAY CAUSE SKIN BURNS.SEE NAMEPLATE AND INSTRUCTIONS. KEEP FURNISHINGS AND OTHER COMBUSTIBLE MATERIALS A CONSIDERABLE DISTANCE AWAY FROMTHIS APPLIANCE. KEEP HOPPER LID CLOSED DURING OPERATION.FAILURE TO DO SO MAY RESULT IN EMISSION OF PRODUCTS OF COMBUSTION FROMTHE HOPPER UNDER CERTAIN CONDITIONS.MAINTAIN HOPPER SEAL IN GOOD CONDITION. DO NOT OVERFILLTHE HOPPER.

DANGER: CHAUD- NE PAS TOUCHER.TENIR LES ENFANTS ET LES VENTEMENTS A l!ECART. RISQUE DE BRULURE.VOIR INSTRUCTIONSSUR LA PLAQUE. LAISSER UNE DISTANCESUFFISANTE ENTRE l!APPAREIL ET LES MEUBLES OU AUTRES OBJEST A RISQUE.N'UTILISER CET APPAREIL QUE LORSQUE LE COUVERCLE DE LA TREMIE EST BIEN FERME-IGNORER CETTE CONSIGNE PEUT ENTRAINER DES EMANATIONS DE PRODUITS ISSUS DE LA COMBUSTION ATRAVERS LATREMIE DANS CERTAINES CONDITIONS- VEILLER AU BON ETAT DUJOINT DE LATREMIE- NE PAS EXCEDER LA CAPACITE DE LA TREMIE.

HARMAN®

US ENVIRONMENTAL PROTECTION AGENCY
Certified to comply with 2020 particulate emission standards.
Certifié conforme aux normes 2020 d'émission de particules

Date of Manufacture / Date de fabrication:
2019 2020 2021 JAN FEB MAR APR MAY JUN JUL AUG SEP OCT NOV DEC

Manufactured by / Fabriqué par: Hearth and Home Technologies 352 Mountain House Road, Halifax PA 17032

HEARTH & HOME TECHNOLOGIES – P/N 8390-784_R1
19-84162

Owner's Manual

Care and Operation

INSTALLER: Leave this manual with party responsible for use and operation.
OWNER: Retain this manual for future reference.
Contact your local dealer with questions on installation, operation or service.

NOTICE: SAVE THESE INSTRUCTIONS

HARMAN®

BUILT TO A STANDARD, NOT A PRICE

Model(s):

P35i-C Pellet Insert

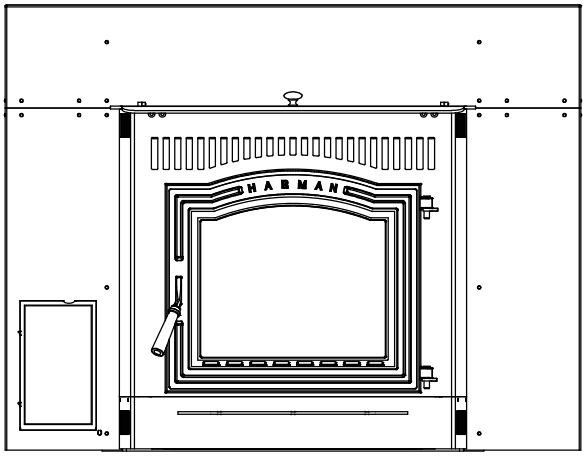

NATIONAL FIREPLACE INSTITUTE

Pellet Fuels Institute

⚠ CAUTION

Check building codes prior to installation.

- Installation MUST comply with local, regional, state and national codes and regulations.
- Contact local building or fire officials about restrictions and installation inspection requirements in your area.

⚠ CAUTION

Tested and approved for wood pellets only burning of any other type of fuel voids your warranty. When burning higher ash content pellets more frequent cleanings may be required.

⚠ WARNING

Please read this entire manual before installation and use of this pellet fuel-burning room heater.
Failure to follow these instructions could result in property damage, bodily injury or even death.

- Do not store or use gasoline or other flammable vapors and liquids in the vicinity of this or any other appliance.
- Do not overfire - If any external part starts to glow, you are overfiring. Reduce feed rate. Overfiring will void your warranty.
- Comply with all minimum clearances to combustibles as specified. Failure to comply may cause house fire.

⚠ WARNING

HOT SURFACES!

Glass and other surfaces are hot during operation and cool down.

Hot glass will cause burns.

- Do not touch glass until it is cooled
- NEVER allow children to touch glass
- Keep children away
- CAREFULLY SUPERVISE children in same room as stove.
- Alert children and adults to hazards of high temperatures.

  High temperatures may ignite clothing or other flammable materials.
- Keep clothing, furniture, draperies and other flammable materials away.

NOTE

To obtain a French translation of this manual, please contact your dealer or visit www.harmanstoves.com

Pour obtenir une traduction française de ce manuel, s'il vous plaît contacter votre revendeur ou visitez www.harmanstoves.com

Read this manual before operating this appliance.
Please retain this Owner's Manual for future reference.
Read the Installation Manual before making any installation or finishing changes.

Congratulations, The Harman® P35i-C pellet insert you have selected is designed to provide the utmost in safety, reliability, and efficiency.

As the owner of a new pellet stove, you'll want to read and carefully follow all of the instructions contained in this owner's manual. Pay special attention to all cautions and warnings.

This owner's manual should be retained for future reference. We suggest that you keep it with your other important documents and product manuals.

Your new Harman® P35i-C Pellet Insert will give you years of durable use and trouble-free enjoyment. Welcome to the Harman® family!

Listing Label Information/Location

The model information regarding your specific stove can be found on the rating plate usually located in the control area of the stove.

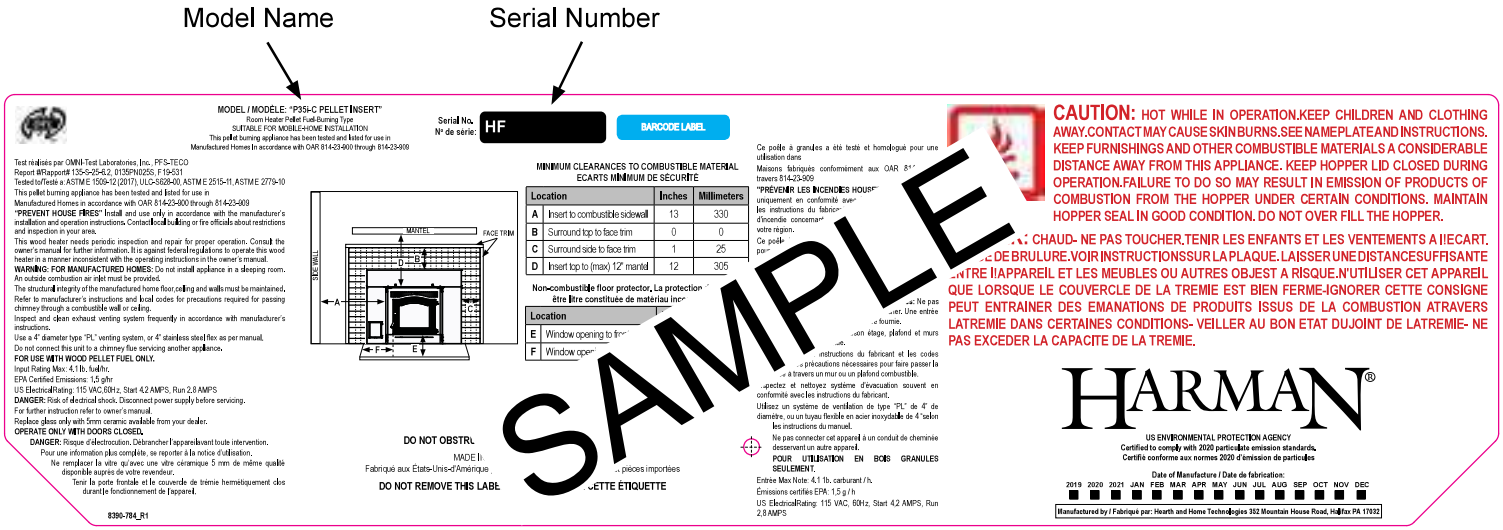

Table of Contents

1 Product Specifications and Important Safety Information

A. Appliance Certification / Specifications 4
B. Mobile Home Approval 4
C. BTU & Efficiency Specifications 4
D. Appliance Safety 5
E. California 5
F. Clear Space 5
G. Helpful Hints 6
H. Fuel Specifications 6
I. Frequently Asked Questions 8

2 Maintenance and Service

A. Proper Shutdown Procedure 9
B. Quick Reference Maintenance Chart 10
C. Unit Maintenance 11
- Daily/Weekly Maintenance 11
- Monthly Maintenance 11
- Yearly Maintenance 12

3 Reference Materials

A. Service Parts 15
B. Limited Lifetime Warranty 20
C. Loss of Power Addendum 23
D. Emergency Manual Ignition 23
E. Troubleshooting 24
F. Contact Information 26

➔ = Contains updated information

⚠ Safety Alert Key:

- ***DANGER!*** *Indicates a hazardous situation which, if not avoided* ***will*** *result in death or serious injury.*
- ***WARNING!*** *Indicates a hazardous situation which, if not avoided* ***could*** *result in death or serious injury.*
- ***CAUTION!*** *Indicates a hazardous situation which, if not avoided, could result in minor or moderate injury.*
- ***NOTICE:*** *Used to address practices not related to personal injury.*

1 Product Specific and Important Safety Information

A. Appliance Certification

MODEL:	P35i-C Pellet Insert
LABORATORY:	OMNI-Test Laboratories, Inc., PFS-TECO
REPORT NO.	135-S-25-6.2, 0135PN025S, F19-531
TYPE:	Pellet Fueled Insert/Supplementary For Residential Use
STANDARD(s):	ASTM E 1509-12 (2017), ULC-S628-00, ASTM E 2515-11, ASTM E 2779-10
ELECTRICAL RATING:	120 VAC, 60 Hz, Start 3.6 Amps, Run 1.5 Amps
GLASS SPECIFICATION:	5mm mirrored ceramic glass

The P35i-C Pellet Insert is certified to comply with 2020 EPA particulate emission standards.

NOTE: This installation must conform with local codes. In the absence of local codes you must comply with the ASTM E 1509-12, ULC-S628-93 **& (UM) 84-HUD**

B. Mobile Home Approved

This appliance is approved for mobile home installations when not installed in a sleeping room and when an outside combustion air inlet is provided.

The appliance must be properly grounded to the frame of the mobile home and use only listed pellet vent, Class "PL" connector pipe.

A Harman® Outside Air Kit must be installed in a mobile home installation.

CAUTION

THE STRUCTURAL INTEGRITY OF THE MANUFACTURED HOME FLOOR, WALL, AND CEILING/ROOF MUST BE MAINTAINED.

DO NOT INSTALL IN SLEEPING ROOM.

WARNING

Risk of Fire! *Hearth & Home Technologies disclaims any responsibility for, and the warranty and agency listing will be voided by the below actions.*

This wood heater needs periodic inspection and repair for proper operation. It is against federal regulations to operate this wood heater in a manner inconsistent with operating instructions in this manual.

C. BTU & Efficiency Specifications

EPA Certification Number:	
EPA Certified Emissions:	1.5 g/hr
***LHV Tested Efficiency:**	74.2%
****HHV Tested Efficiency:**	68.2%
*****EPA BTU Output:**	9,600 - 28,800
******BTU Input**	12,800 - 38,400
Vent Size:	4 Inch
Hopper Capacity:	62 lbs
Fuel	Wood Pellet

**Weighted average LHV efficiency using data collected during EPA emissions test.*

***Weighted average HHV efficiency using data collected during EPA emissions test.*

****A range of BTU outputs based on EPA Default Efficiency and the burn rates from the low and high EPA tests.*

*****Based on the maximum feed rate per hour multiplied by approximately 8600 BTU's which is the average BTU's from a pound of pellets.*

This wood heater has a manufacturer-set minimum low burn rate that must not be altered. It is against federal regulations to alter this setting or otherwise operate this wood heater in a manner inconsistent with operating instructions in this manual.

This wood heater needs periodic inspection and repair for proper operation. It is against federal regulations to operate this wood heater in a manner inconsistent with operating instructions in this manual.

DO NOT:

- *Install or operate damaged appliance*
- *Modify appliance*
- *Install other than as instructed by Hearth & Home Technologies*
- *Operate the appliance without fully assembling all components*
- *Overfire*
- *Install any component not approved by Hearth & Home Technologies*
- *Install parts or components not Listed or approved.*
- *Disable safety switches*

Improper installation, adjustment, alteration, service or maintenance can cause injury or property damage.

For assistance or additional information, consult a qualified installer, service agency or your dealer.

NOTE: Hearth & Home Technologies, manufacturer of this appliance, reserves the right to alter its products, their specifications and/or price without notice.

Harman® is a registered trademark of Hearth & Home Technologies.

D. Appliance Safety

WARNING

If you expect that small children or vulnerable adults may come into contact with this appliance, the following precautions are recommended:

- Install a physical barrier such as:
  - A decorative fire screen.
  - Adjustable safety gate.
- Never leave children alone near a hot stove, whether operating or cooling down.
- Teach children to ***NEVER*** touch the stove.
- Consider not using the stove when children will be present.
- Use only specified components as replacement parts. Other components may not allow your stove to operate as it was intended.

Contact your dealer for more information, or visit: www.hpba.org/safety-information.

To prevent unintended operation when not using your stove for an extended period of time (summer months, vacations, trips, etc):

- Unplug stove from receptacle.

Due to high temperatures, this stove should be placed away from traffic, furniture and draperies.

Children and adults should be alerted to the hazards of high surface temperatures and should stay away to avoid burns to the skin and/or clothing.

Young children should be carefully supervised when they are in the same room as the stove.

Clothing and other flammable materials should not be placed on or near this stove.

Installation and repair of this stove should be done by a qualified service person. The appliance should be inspected before use and at least annually by a qualified service person. More frequent cleaning will be required. It is imperative that control compartments and circulating air passageways of this stove be kept clean.

Connect the power cord into a 120 VAC, 60 Hz grounded receptacle. (A surge protector is recommended to protect the circuit board.) Be sure the polarity of the outlet the stove is plugged into is correct.

WARNING

THIS WOOD HEATER HAS A MANUFACTURER-SET MINIMUM LOW BURN RATE THAT MUST NOT BE ALTERED. IT IS AGAINST FEDERAL REGULATIONS TO ALTER THIS SETTING OR OTHERWISE OPERATE THIS WOOD HEATER IN A MANNER INCONSISTENT WITH OPERATING INSTRUCTIONS IN THIS MANUAL.

E. California

WARNING

This product and the fuels used to operate this product (wood), and the products of combustion of such fuels, can expose you to chemicals including carbon black, which is known to the State of California to cause cancer, and carbon monoxide, which is know to the State of California to cause birth defects or other reproductive harm. For more information go to: www.P65Warnings.ca.gov

F. Clear Space

WARNING

RISK OF FIRE! Do NOT place combustible objects in front or to the sides of the appliance. High temperatures may ignite clothing, furniture or draperies.

NOTICE: Clearances may only be reduced by means approved by the regulatory authority having jurisdiction.

WARNING

RISK OF FIRE! Keep combustible materials, gasoline and other flammable vapors and liquids clear of appliance.

- Do **NOT** store flammable materials in the appliance's vicinity.
- Do **NOT** use gasoline, lantern fuel, kerosene, charcoal lighter fluid or similar liquids to start or "freshen up" a fire in this heater.

Keep all such liquids well away from the heater while it is in use as combustible materials may ignite.

WARNING

MOBILE/MANUFACTURED HOME GUIDELINES: DO NOT ALLOW INSTALLATION IN A SLEEPING ROOM.

WARNING

USE OF IMPROPER FUELS, FIRESTARTERS OR ALTERING THE STOVE FOR HIGHER HEAT OUTPUT MAY CAUSE DAMAGE TO THE STOVE AND COULD RESULT IN A HOUSE FIRE. USE ONLY APPROVED FUELS AND OPERATION GUIDELINES

G. Helpful Hints

When operating your Harman® P35i-C Pellet Insert, follow basic safety standards. Read these instructions carefully before you attempt to operate the P35i-C Pellet Insert. Failure to do so may result in damage to property or personal injury and may void the product warranty.

Cleaning Burn Pot: Whenever your stove is not burning, take the opportunity to scrape the burn pot to remove carbon buildup. A vacuum cleaner is handy to remove the residue. Be sure the stove is cold if you use a vacuum.

Carbon buildup can be scraped loose with the fire burning using the special tool provided with your stove. Scrape the floor and sides of the burn pot. The carbon will be pushed out by the incoming fuel. Always wear gloves when scraping the burnpot.

Disposal of Ashes: Ashes should be placed in a steel container with a tight fitting lid. The closed container of ashes should be placed on a non-combustible floor or on the ground, well away from all combustible materials, pending final disposal. If the ashes are disposed of by burial in soil or otherwise locally dispersed, they should be retained in the closed container until all cinders have thoroughly cooled. Other waste shall not be placed in this container.

Soot and Flyash Formation and Need for Removal: The products of combustion will contain small particles of flyash. The flyash will collect in the exhaust venting system and restrict the flow of the flue gases. Incomplete combustion, such as occurs during startup, shutdown, or incorrect operation of the room heater will lead to some soot formation which will collect in the exhaust venting system. The exhaust venting system should be inspected at least once every year to determine if cleaning is necessary.

When burning wood pellets on low, the potential exists for creosote to form. The venting system should be inspected periodically throughout the heating season to determine if creosote buildup has occurred. If a significant layer of creosote has accumulated (1/8" or more), it should be removed to reduce the risk of a chimney fire. If a fire occurs, call the fire department, shut down the stove, and evacuate the residence. Before using the appliance, have the venting system thoroughly inspected and replace any damaged components.

With any hearth appliance, installation of smoke detectors is recommended on every level of the home.

Possible causes of smoke detector activation:

Paint curing process - Open a window near the appliance for the first few hours of burning.

Exhaust being drawn back inside the dwelling - Outside air connection to the appliance is necessary.

Vent leakage - All interior seams and joints should be sealed with silicone where applicable. Follow vent manufacturers instructions for proper sealing.

⚠ CAUTION

This appliance must be vented to the outside

H. Fuel Specifications

The P35i-C Pellet Insert is approved for burning any grade of pelletized bio-mass fuel.

It should be noted, however, that higher ash content will require more frequent cleaning.

The moisture content of pellets must not exceed 8%. Higher moisture will rob BTU's and may not burn properly.

Fuel should **not** be stored within the stove installation clearances or within the space required for cleaning and ash removal.

Fuel and Fuel Storage

Pellet fuel quality can fluctuate from manufacturer to manufacturer, and even from bag to bag.

Hearth & Home Technologies recommends using only fuel that is certified by the Pellet Fuels Institute (PFI).

Fuel Material
- Made from sawdust and/or other wood by-products
- Source material typically determines ash content

Higher Ash Content Material
- Hardwoods with high mineral content
- Bark and leaves as source material
- "Standard" grade pellets and other biomass

Lower Ash Content Material
- Softwood; pine, fir, etc.
- Materials with lower mineral content
- "Premium" grade pellets

Performance
- Higher ash content requires more frequent maintenance.
- "Premium" grade pellets will produce the highest heat output.
- Burning pellets longer than 1-1/2 inches (38mm) can cause inconsistent feeding and/or ignition.

Clinkers
- Minerals and other non-combustible materials, like sand, will turn into a hard glass-like substance when heated.
- Trees from different areas will vary in mineral content. For this reason, some fuels will produce more clinkers than others.

Moisture
- Always burn dry fuel. Burning fuel with high moisture content takes energy to dry and tends to cool the appliance thus, robbing heat from your home.
- Damp pellet fuel could turn back into sawdust which does not flow properly through the feed system.

H. Fuel Specifications *(Cont.)*

Storage

- Wood pellets should be left in their original sealed bag until ready to use, to prevent moisture.
- Do not store fuel within the specified clearance areas, or in a location that will interfere with routine cleaning and maintenance procedures.

NOTICE

Hearth & Home Technologies is not responsible for stove performance or extra maintenance required as a result of using fuel with higher ash or mineral content.

CAUTION

Do not burn fuel that contains an additive.

- May cause hopper fire
- Damage to product may result

Read the list of ingredients on the packaging.

CAUTION

Odors and vapors released during initial operation.

- Curing of high temperature paint.
- Open windows for air circulation.

Odors may be irritating to sensitive individuals.

CAUTION

Tested and approved for use with wood pellets ONLY. Burning of any other fuel will void your warranty.

WARNING

BURNING COLORED PAPER, CARDBOARD, SOLVENTS, TRASH AND GARBAGE OR ALTERING THE STOVE FOR HIGHER HEAT OUTPUT MAY CAUSE DAMAGE TO THE STOVE AND COULD RESULT IN A HOUSE FIRE. USE ONLY APPROVED FUELS AND FOLLOW ONLY THESE OPERATION GUIDELINES.

WARNING

NEVER USE GASOLINE, GASOLINE-TYPE LANTERN FUEL, KEROSENE, CHARCOAL LIGHTER FLUID, OR SIMILAR LIQUIDS TO START OR 'FRESHEN UP' A FIRE IN THIS HEATER. KEEP ALL SUCH LIQUIDS WELL AWAY FROM THE HEATER, WHILE IN USE.

I. Frequently Asked Questions

With proper installation, operation, and maintenance your appliance will provide years of trouble-free service. If you do experience a problem, this troubleshooting guide will assist a qualified service person in the diagnosis of a problem and the corrective action to be taken.

Contact your dealer for additional information regarding operation and troubleshooting. Visit www.harmanstoves.com to find a dealer.

ISSUES	SOLUTIONS
Metallic noise.	Noise is caused by metal expanding and contracting as it heats up and cools down, similar to the sound produced by a furnace or heating duct. This noise does not affect the operation or longevity of your appliance.
White ash buildup on glass.	This is normal. Clean the glass using any non-abrasive glass cleaner.
Glass has buildup of black soot	Excessive build-up of ash. The lower burn settings will produce more ash, the higher burn settings produce less. The more it burns on low the more frequent cleaning of the glass is required.
Glass has turned dirty.	Excessive build up of ash. The lower burn settings will produce more ash, the higher burn settings produce less. The more it burns on low the more frequent cleaning of the glass is required.
Fire has tall flames with black tails and is lazy.	The feed rate needs to be reduced or the burnpot needs cleaning. Heat exchanger or exhaust blower needs cleaning.
Smoky start-up or puffs of smoke from the airwash.	Burnpot may be dirty, Clean the burnpot.
Large flame at start-up.	This is normal. Flame will settle down once the fire is established.
Missed Ignition	Ensure pellets in burnpot Ensure holes in burnpot are clear of obstructions above the igniter. See Burnpot Maintenance. Check to see if the ignitor is getting hot, if not replace ignitor. *See addendum for manual ignition instructions for emergency heating needs.

2 Maintenance & Service

When properly maintained, your stove will give you many years of trouble-free service. **Contact your dealer** to answer questions regarding proper operation, trouble-shooting and service for your appliance. Visit www.harmanstoves.com to find a dealer. We recommend annual service by a qualified service technician.

A. Proper Shutdown Procedure

CAUTION

Shock and Smoke Hazard

- Turn unit to the off position, let appliance completely cool and combustion fan must be off. Now you can unplug appliance before servicing.
- Smoke spillage into room can occur if appliance is not cool before unplugging.
- Risk of shock if appliance not unplugged before servicing appliance.

Follow the detailed instructions found in this section for each step listed in the chart below.

NOTICE

The type of fuel you are burning will dictate how often you have to clean your burnpot. Clean more frequently if you encounter heavy build-up of ash at the recommended interval or you see soot coming from the vent. **Not properly cleaning your appliance on a regular basis will void your warranty.**

Note: Do not use a household vacuum to clean the stove. We recommend that you use a shop vacuum that is equipped with a fine dust filter called a HEPA filter or a vacuum specially made for fly ash and soot. USING A VACUUM WHICH IS NOT EQUIPPED WITH A FINE DUST FILTER WILL BLOW FLY ASH AND SOOT OUT INTO THE ROOM.

NOTE: THE STOVE MUST BE COMPLETELY OUT BEFORE YOU VACUUM THE STOVE. LIVE PELLET EMBERS, IF SUCKED INTO THE VACUUM, WILL LIGHT THE VACUUM ON FIRE AND MAY ULTIMATELY CAUSE A HOUSE FIRE.

B. Quick Reference Maintenance Chart

Frequency	Cleaning Procedure	Safety Measures	Tips
Daily	Scrape Burn pot	Wear flame resistant gloves[3]	Vigorous, strong scraping specifically near neck of burn pot. Scrape every time you add pellets or at least every 3 bags of fuel.[2]
Weekly	Empty Ash Pan	Wear protective gloves.[1] Put ashes into a steel non-combustible container with tight fitting lid outside.	Unit does not need to be turned off. Reduce to low burn during removal.
	Clean the Glass	Stove must be turned off and cold.	
Monthly	Scrape & Vacuum Heat Exchanger	Stove must be turned off and cold.	Use provided scraper. Scrape back and sides of firebox.
	Brush & vacuum the distribution fan	Stove must be turned off, cold and unplugged from power supply.	Use provided paint brush. This should be done approximately every 25 bags.[2]
	Inspect Hopper lid gasket for damage		Replace gasketing if frays, tears or other visible damage to gasket. This should be done approximately every 50 bags.[2]
	Clean Igniter	Stove must be turned off, cold and unplugged from power supply. Wear protective gloves.[1] Put ashes into a steel non-combustible container with tight fitting lid outside.	Use provided paint brush. Vacuum loose ash from around igniter and inside burn pot.
Stove MUST be turned off, cold and unplugged from power supply for Yearly Cleaning.			
Yearly[4]	Brush & vacuum the combustion fan and venting/exhaust path	Wear protective gloves.[1] Put ashes into a steel non-combustible container with tight fitting lid outside.	Use provided paint brush to brush fan blades. *Use flue brush to clean venting being careful not to damage the ESP.[2]
	Inspect door gasket		Replace gasketing if frays, tears or other visible damage to gasket.
	Brush & vacuum venting system	Wear protective gloves.[1] Put ashes into a steel non-combustible container with tight fitting lid outside.	

* A flue brush of appropriate size and length may need to be purchased for proper maintenance.

1. Protective gloves will help prevent skin abrasion while working on steel surfaces.
2. Frequency of cleaning depends largely on fuel type. Lower quality pellets require most frequent cleaning.
3. Flame resistant gloves will help protect your skin from potential contact with heat or flames.
4. Yearly cleaning is also known as a Total Clean. This requires completing all the Daily, Weekly, Monthly and Yearly maintenance mentioned. This should be done before you begin burning the unit each heating season.

C. Unit Maintenance

Daily/Weekly Maintenance: It is recommend that the burn pot be scraped whenever adding fuel; taking the opportunity to clean the burn pot will insure proper daily operation.

Scraping the Burn Pot-

- Using flame resistant gloves, vigorously scrape the top holed surface and sides of the burn pot down to auger tube, be sure to concentrate in the neck of the burnpot. Figure 2.1.
- Scrape loosened material over edge of burnpot grate into the ashpan.
- If needed, empty the ash pan while adding fuel and after scraping the burn pot.

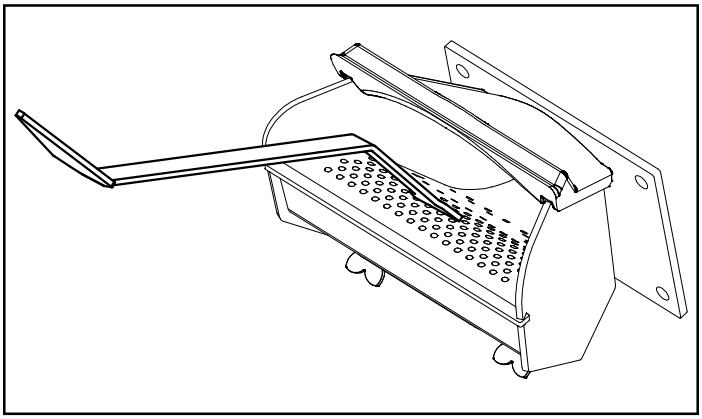

Figure 2.1

Monthly Maintenance: It is recommend that the unit be shut down and unplugged from any power source for a monthly cleaning. Monthly cleanings will insure proper operation of your unit throughout the heating season.

- Cleaning Glass - Once unit is cold, use a non-abrasive glass cleaner on glass and wipe clean.
- Scrape and Vacuum Heat Exchanger.

Cleaning the Heat Exchanger-

Using the scraper provided run the straight edge along the flat surface of the Heat Exchanger removing any carbon deposits or ash build-up, Figure 2.2.

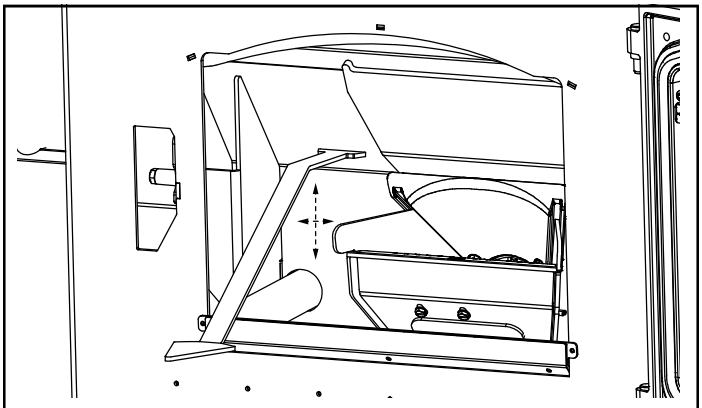

Scrape the heat exchanger free of Fly-Ash and carbon build-up

Figure 2.2

Cleaning the Burn Pot-

- Vigorously scrape the top holed surface and sides of the burn pot down to auger tube, as suggested in the Daily/ Weekly Maintenance Section.
- Use the supplied allen wrench to remove any build-up that may have accumulated in the holes of the burn pot grate. Simply push the allen wrench down through each hole ensuring it is clear of any build-up paying attention not to damage the igniter element in the process. Figure 2.3.

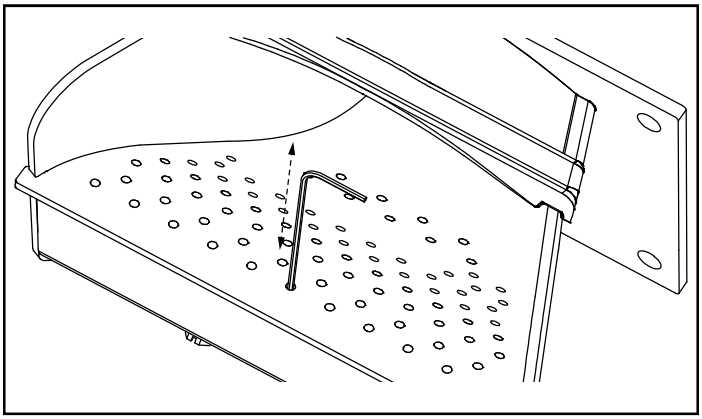

Figure 2.3

DANGER

Disconnect the power to the unit before removing cover.

- Loosen the (2) wing thumb screws on the lower front angle of the burn pot. Figure 2.4

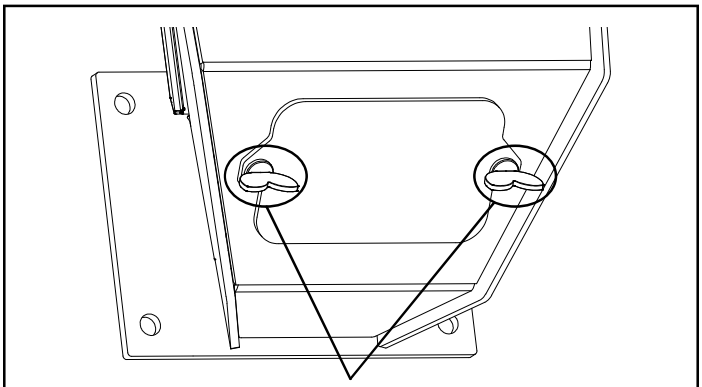

Wing Thumb Screws

Figure 2.4

- Lift off the clean-out cover to open the bottom clean-out chamber. Figure 2.4
- Clean ash buildup from inside the chamber while cover is off. Use the scraper to tap on the top front edge of the burn pot. This will help knock pieces of ash, loosened by the scraping process, down through the holes. It also helps knock ash buildup from the igniter element and bracket.

Cleaning Igniter Bracket-

Check cleanliness of the igniter and inner burnpot. If the igniter has ash buildup it must be removed to insure proper ignition. Use the provided brush to remove ash buildup from in and around the igniter. Once ash is loose vacuum around igniter and at the base of burn pot. Figure 2.5.

⚠ WARNING

Use caution when cleaning burn pot clean-out chamber. Do not damage the high temperature igniter wires.

Note: The hot lead/cold lead connection must always be pulled to the rear of the feeder body before operation.

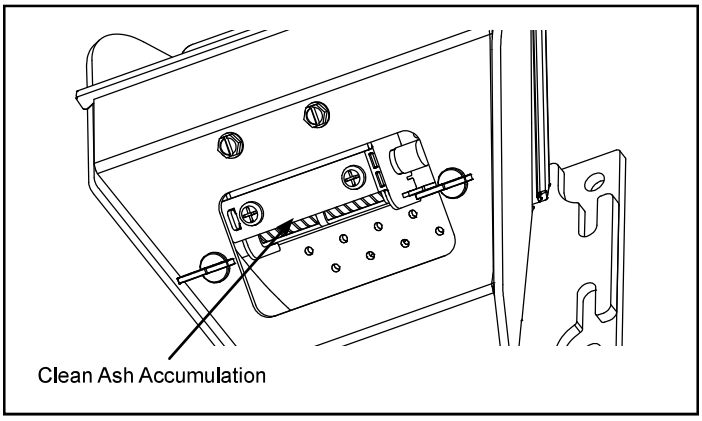

Figure 2.5

Yearly Maintenance: Cleaning the Combustion Fan Chamber-

It is recommended that you use a vacuum that is designed for ash, as ashes may block conventional vacuum filters.

1. Remove the left and right corner cleanout covers by removing the wing-screws (one per). Figure 2.6.

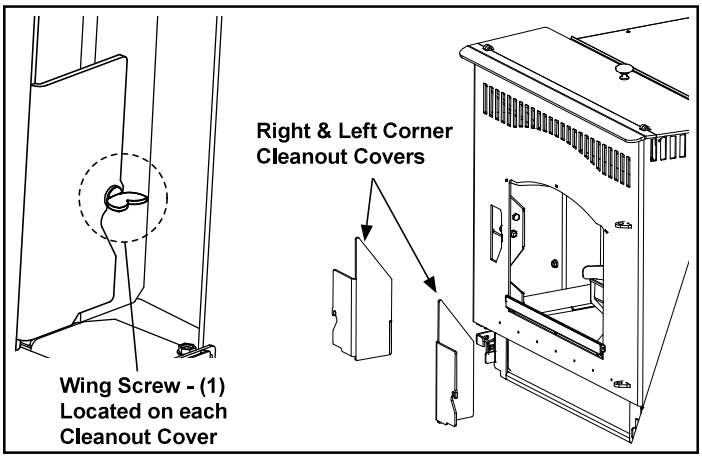

Figure 2.6

2. Brush or vacuum the remaining ash from the firebox.
3. Guide the vacuum hose upward into the exhaust passage in the right rear corner of the firebox. Figure 2.7.

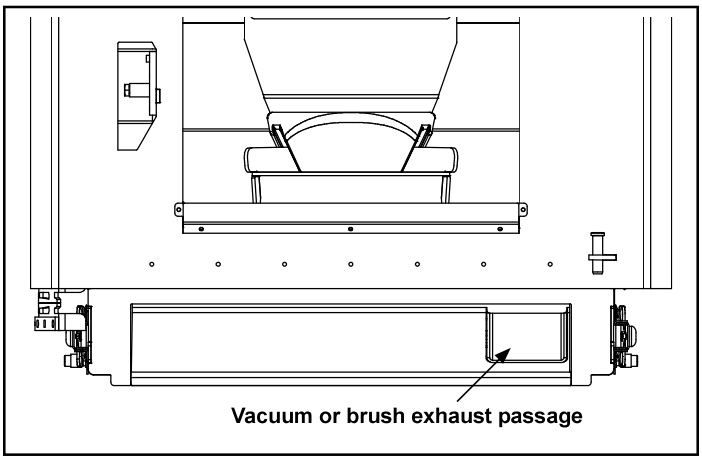

Figure 2.7

4. You can now re-install the right and left cleanout covers into the firebox and close the door.
5. Release the right and left side spring latches and slide the insert body out onto the hearth or onto the service rail kit, if purchased. Figure 2.8.

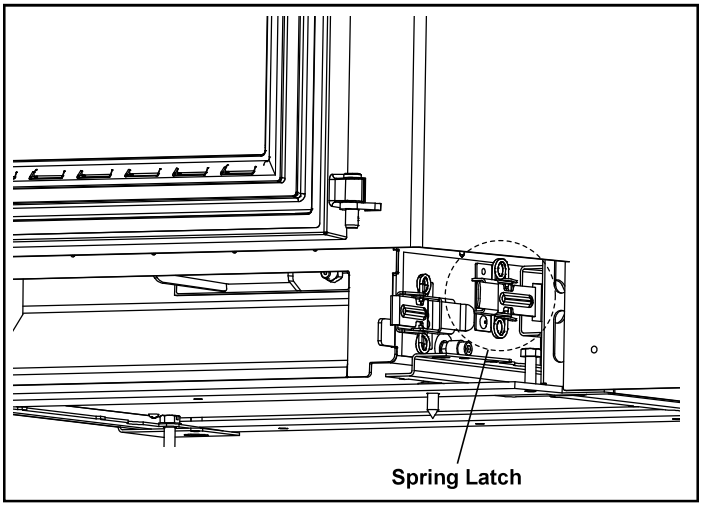

Figure 2.8

6. Remove the exhaust chamber access cover on the right rear of the insert. Figure 2.9.
7. With this cover removed, you can vacuum the paddle fan and the inside of the chamber. Be careful not to bend the blades on the paddle fan.

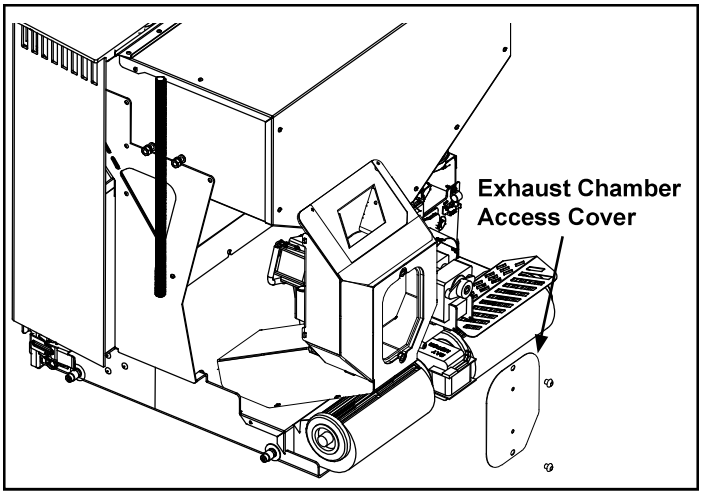

Figure 2.9

8. Before reinstalling the access cover, make sure the insulation between the two layers is in tact.

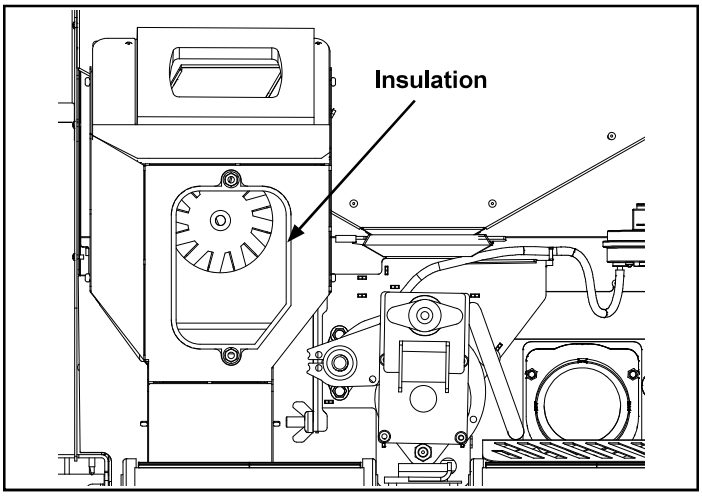

Figure 2.10

9. Whenever the hopper is empty, inspect and remove any large amounts of sawdust or fines. Although this finer material will mostly feed through with the fuel, large quantities of sawdust may restrict feeder flow.

Caring for your Glass-

The glass used in your stove is manufactured to exact standards to withstand the high heat of the fire, but like all glass, it must be treated with common sense and care. Never abuse the glass by slamming the door shut or striking the glass with a heavy object. If the glass is broken or damaged, do not operate the stove until it has been replaced.

Glass - Replacement

If the stove's glass is cracked or broken, you must replace it before operating your stove. Remove pieces carefully. Replace glass only with Harman® replacement glass; **do not use substitutes.**

Carefully remove damaged glass, gasket material, and hold down clips (set aside).

Install the self adhesive 1/4"" gasket material around the front face of the glass. Set the glass panel and gasket gently onto the door. Install the hold down clips and tighten with bolts.

Glass - Cleaning

Sometimes it will be necessary to clean accumulated ash from the glass surface; allowing this ash to remain on the glass for long periods can result in "etching" due to the acidity of the ash. Never clean the glass while it is hot, and **do not** use abrasive substances. Wash the surface with cool water, and rinse thoroughly. You may wish to use a non-abrasive cleaner specifically designed for use on stove glass. In any case, dry thoroughly before relighting your stove.

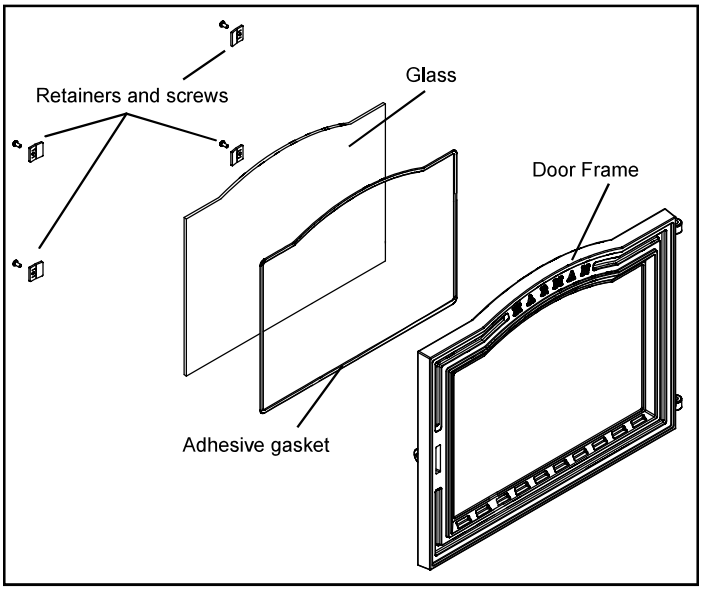

Figure 2.14

Inspect all Gaskets-

While the unit is cool, inspect all door gaskets to insure proper seal. The gasket should be continuous without frays or tears; having plyable gasket means having a correct seal for proper operation. Figures 2.14 & 2.15.

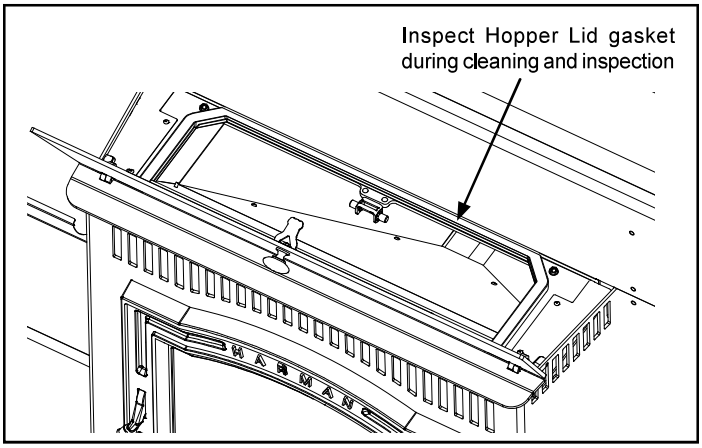

Figure 2.15

Distribution Blower-

Checking the distribution blowers yearly is a good habit to get into. Dust, animal hair or anything else that can make its way into that area can drastically cut down on the air movement throughout the unit ultimately causing less of a heating efficiency.

Once the unit is shut down and cooled, unplug the unit from its power supply. Behind each side panel release (1) spring latches that holds the unit to the inserts cage. Figure 2.16.

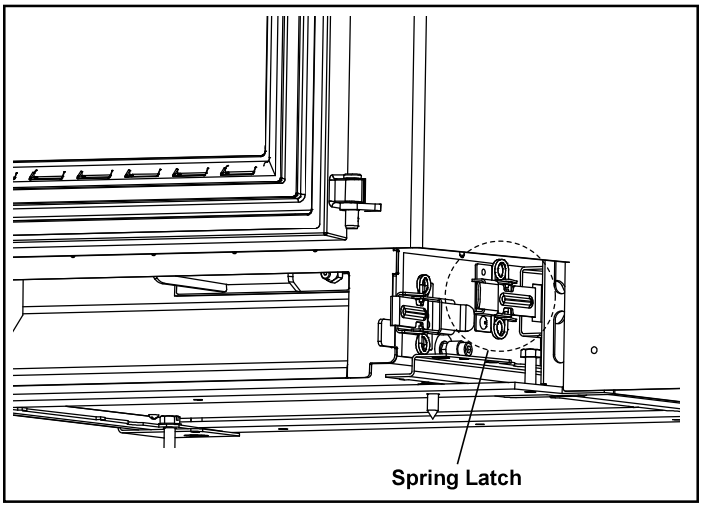

Figure 2.16

Once unit is pulled away from the fireplace, thoroughly vacuum around the Distribution Blowers. Figure 2.17.

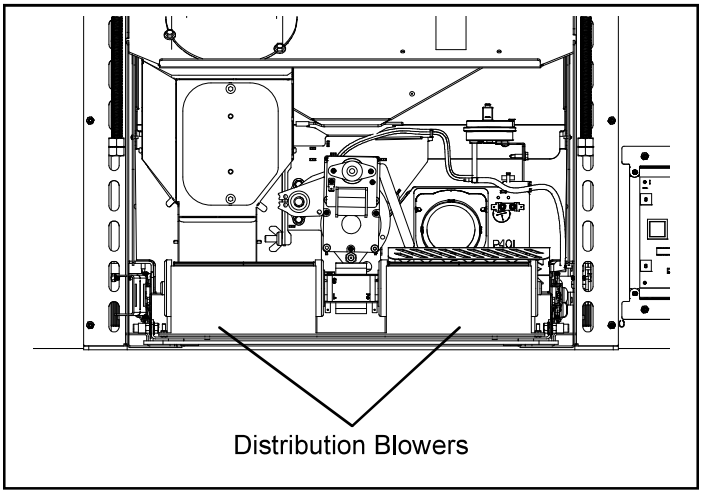

Figure 2.17

Cleaning Venting System-

Its is recommend that a certified chimney sweep perform service and inspection to your chimney system to insure your unit is vented safely and in accordance to local code.

A. Service Parts

HARMAN® BUILT TO A STANDARD, NOT A PRICE

Service Parts **P35i Pellet Insert**

Pellet Insert

Beginning Manufacturing Date: July 2010
Ending Manufacturing Date: Active

(23.5 in)1-70-774235-1 (Black), (19.5 in)1-70-774195-1 (Black),

Ending Manufacturing Date: June 2011
(23.5 in) 1-70-774235-2 (Charcoal), 1-70-774235-3 (Goldenfire))
(19.5 in) 1-70-774195-2 (Charcoal), 1-70-774195-3 (Goldenfire))

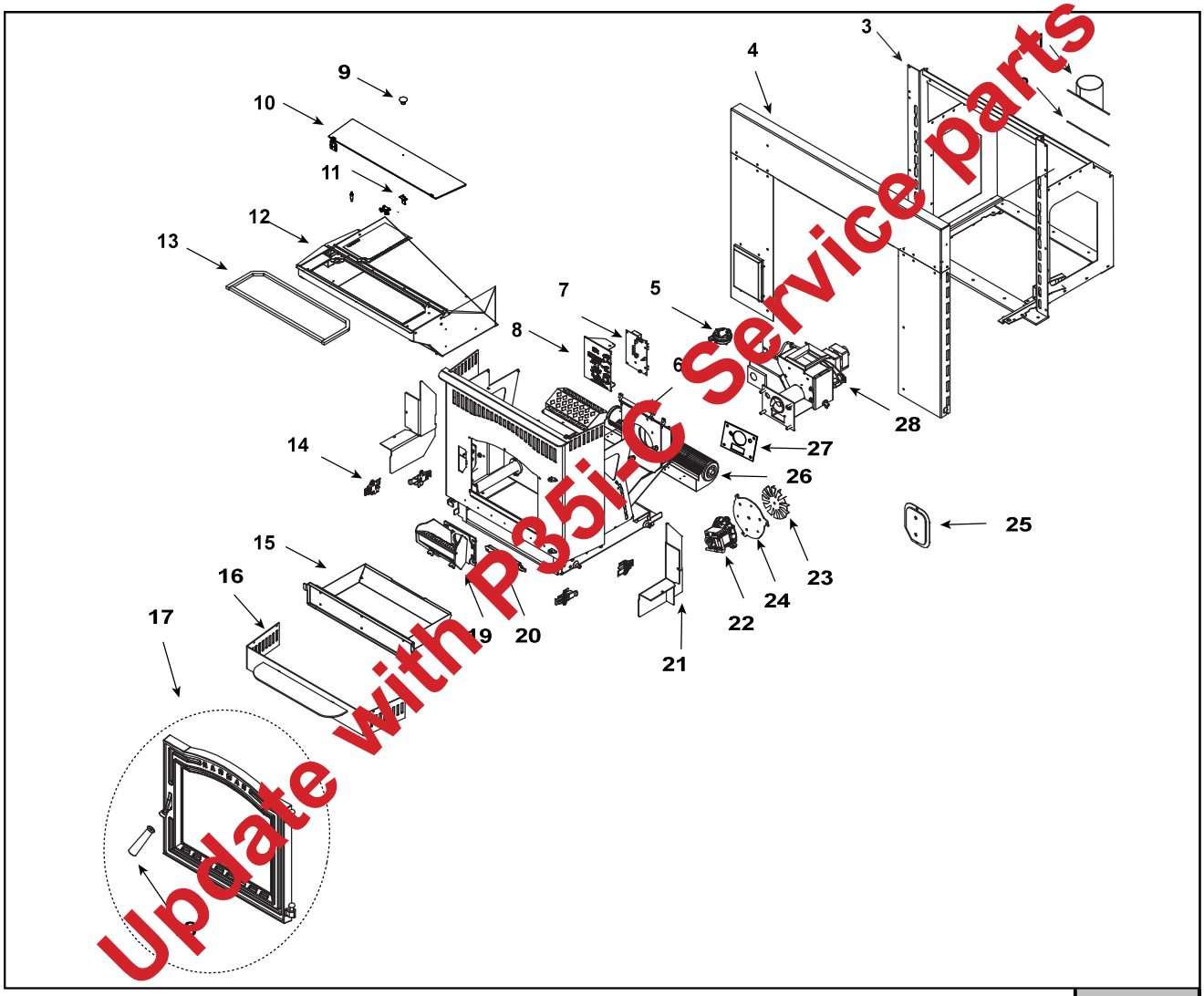

IMPORTANT: THIS IS DATED INFORMATION. Parts must be ordered from a dealer or distributor. **Hearth and Home Technologies does not sell directly to consumers.** Provide model number and serial number when requesting service parts from your dealer or distributor.

ITEM	Description	COMMENTS	PART NUMBER	Stocked at Depot
1	Pipe Stub/4 in Flex w/gasket		1-00-674040	
	3" Stub Kit		1-00-674039	
2	Gasket Set, Burnpot/Pipe Stub	Set of 5	1-00-07384	Y
3	Mounting Frame Assembly		1-10-774235A	
	Screw - HCS 5/16-18 X 1-1/4	Pkg of 50	3-30-1129-50	Y

Additional service parts on following page. 2/19

Beginning Manufacturing Date: July 2010
Ending Manufacturing Date: Active

#4 Surround Assembly

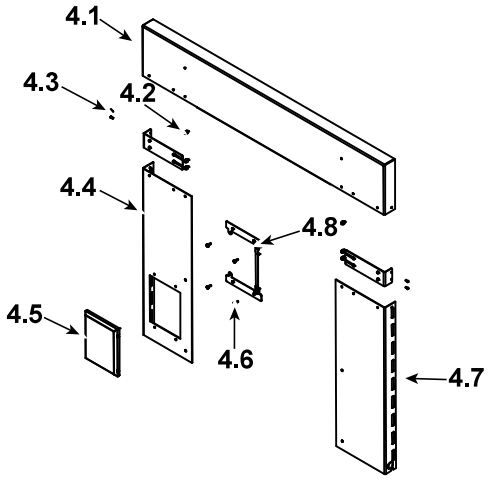

IMPORTANT: THIS IS DATED INFORMATION. Parts must be ordered from a dealer or distributor. **Hearth and Home Technologies does not sell directly to consumers.** Provide model number and serial number when requesting service parts from your dealer or distributor.

ITEM	Description	COMMENTS	PART NUMBER	Stocked at Depot
4	Wing Assembly	Oversize-Black	1-00-774250-1	
		Standard Black	1-00-774221-1	
		No longer available	1-00-774250-2	
		No longer available	1-00-774250-3	
		Custom	1-00-774221-SPL	
4.1	Surround Top	Standard	1-10-774222	
		Oversize	1-10-774250	
4.2	Machine Screw Nut10-32, Pkg of 100	Pre 4/19	3-30-8003-100	Y
	Machine Screw Nut10-24, Pkg of 100	Post 4/19	3-30-8002-100	Y
4.3	Pop Rivet 1/8 X 1/8 Black	Pkg of 50	3-30-9004-50	
4.4	Surround Left	Standard	1-10-774220	
		Oversize	1-10-774248	
4.5	Control Door w/Hinge		1-00-774310	
4.6	Screw, PHM 8 X 1/2 Black	Pkg of 100	3-30-5000-100	Y
4.7	Surround Right	Standard	1-10-774221	
		Oversize	1-10-774249	
4.8	Control Board Mount	1 Set	1-00-774251	
	Wing Splices	Set of 2	2-00-774178-2	
5	Differential Switch		3-20-6866	Y
6	Docking Gasket		3-44-06108	Y
7	Circuit Board w/Knobs & Shafts		1-00-05886	Y
	Knobs & Shafts	Pkg of 25	1-00-015605	Y
8	Circuit Board Plate		1-10-774114A	Y
	5 Amp Fuses, Pkg of 5	Pre HF662201	3-20-23705-5	Y
		Post HF662201	1-00-05237	Y
	Control Panel Sticker		3-90-07766	

Additional service parts on following page.

Beginning Manufacturing Date: July 2010
Ending Manufacturing Date: Active

IMPORTANT: THIS IS DATED INFORMATION. Parts must be ordered from a dealer or distributor. **Hearth and Home Technologies does not sell directly to consumers.** Provide model number and serial number when requesting service parts from your dealer or distributor.

ITEM	Description	COMMENTS	PART NUMBER	Stocked at Depot
9	Knob w/Screw	Black	1-00-02000-1	
		Gold	1-00-02000	
10	Top Assembly	Pre 008651553	1-10-774223A	Y
		Post 008651553	1-10-774325A	Y
11	Hopper Latch	2 Sets	1-00-0669697	Y
12	23.5 in Hopper	Pre 008651553	1-10-774050A	Y
		008651553 Thru 008654714	1-10-774150A	Y
		Post 008654714	1-10-774850A	Y
	19.5 in Hopper	Pre 008651553	1-10-774028A	Y
		008651553 Thru 008654714	1-10-774128A	Y
		Post 008654714	1-10-774828A	Y
	Switch, Hopper Lid,48 in		3-20-232108	Y
13	3/8X1/2 Silicone PSA-20FT For hopper top		1-00-375501	Y
14	Spring Latch	Qty 4 req	3-31-00927	Y
15	Ash Pan W/Gasket		1-10-774207	Y
	Ash Pan Gasket		3-44-774211	Y
16	Ash Pan Cover Assembly		1-10-774205A	
17	Load Door	Painted Only	3-00-06718P	
	Door glass w/Gasket		1-00-00688	Y
	1/4 Rd Black PSA For glass	15 Ft	1-00-2312	Y
	Glass Clips & Hdwr		1-00-249140	Y
	Latch Kit		1-00-73553	Y
	Ball Plungers	Pkg of 3	3-31-5500-3	
	Ball Spring Bracket		2-00-06714	
	Spring Retainers, 5/16”	Pkg of 100	3-31-94807-100	
	Cast Front Door Latch		3-00-249119P	Y
	Door Latch Adjuster		2-00-06713D	
	3/8 4 Strand White-30 Ft	30 Ft	1-00-00888	Y
	Slick Pins, 1 Pair		1-00-110	Y
18	Wood Handle w/Bolt		1-00-00247	Y
19	Burnpot w/Cleanout		1-10-774286	Y
	Igniter Cradle		1-00-777907	
	Burnpot Cleanout Cover	Set of 2	1-00-06623	Y
	Wingscrews, 1/4-20 x 5/8	Pkg of 10	3-31-782108-10	Y
20	Flame Guide		3-00-03000	Y
	Flame Guide Extension		1-00-774338	Y
21	Cleanout Cover Set	Left & Right	1-00-774213	

Additional service parts on following page.

Beginning Manufacturing Date: July 2010
Ending Manufacturing Date: Active

IMPORTANT: THIS IS DATED INFORMATION. Parts must be ordered from a dealer or distributor. **Hearth and Home Technologies does not sell directly to consumers.** Provide model number and serial number when requesting service parts from your dealer or distributor.

ITEM	Description	COMMENTS	PART NUMBER	Stocked at Depot
22	Combustion Blower		3-21-08639	Y
	Combustion Blower Mounting Screws (Pkg of 100)	Commonly required for Combustion Blower replacement	1-00-53483208	
23	Motor Blade, 4-3/4" Single Paddle		3-21-00661	Y
24	Combustion Blower Mount		1-10-677006	
25	Combustion Cleanout		1-10-774167A	Y
26	Distribution Blower		1-00-29145	Y
27	Gasket, Burnpot/Pipe Stub	Pkg of 5 sets	1-00-07384	Y
28	UL Feeder Assembly		See following page	
	14 Ft Power cord		3-20-674200	Y
	306W/120V Igniter 15 Fin		3-20-677200	Y
		Pkg of 10	1-00-677200	Y
	Airwash O-rings	Pkg of 10	1-00-939639	Y
	Ash Lip Trim	Gold	3-43-08400	
		Brushed Stainless	3-43-08400-7	
		Bright Nickel	3-43-08400-8	
	Burnpot Scrapers	Pkg of 10	2-00-773850-10	
	Diagnostic Display Module		3-20-05401	Y
	DDM Replacement Cable		1-00-05402	
	Disconnect, 3/16" Female	Pkg of 25	1-00-08529	Y
	Disconnect, Female	Pkg of 25	1-00-00959	Y
	Disconnect, Male	Pkg of 25	1-00-00957	Y
	Door Hinge		2-00-06707L	
	Leaf Door Trim	Gold	3-43-06717-4	
		Brushed Stainless	3-43-06717-7	
		Bright Nickel	3-43-06717-8	
	Modern Door Trim	Brushed Stainless	3-43-06797-7	
	Draft Meter Assembly		1-00-00637	Y
	Draft Meter Bolt & Tube		1-00-04004	
	ESP-RED/RED		3-20-00844	Y
	Labels, Caution & Danger	10 Sets	1-00-200408541	
	Lintel, All Thread	Qty 2 req	3-31-00949	
	Lintel Kit	Pre 008655696	1-00-774279	Y
	Pipe Insulation		3-44-774282	Y
	Pop Rivets, 1/8" Black	Pkg of 100	3-30-1104-100	Y
	Roller Hardware	4 Sets	1-00-05232	Y
	Room Sensor		3-20-00906	Y
	Touch up Paint, Black	Pre 008654714	3-42-1990	
		Post 008654714	3-42-19905	
	Wiring Harness		3-20-08727	Y

Additional service parts on following page.

Beginning Manufacturing Date: July 2010
Ending Manufacturing Date: Active

#28 Feeder Assembly

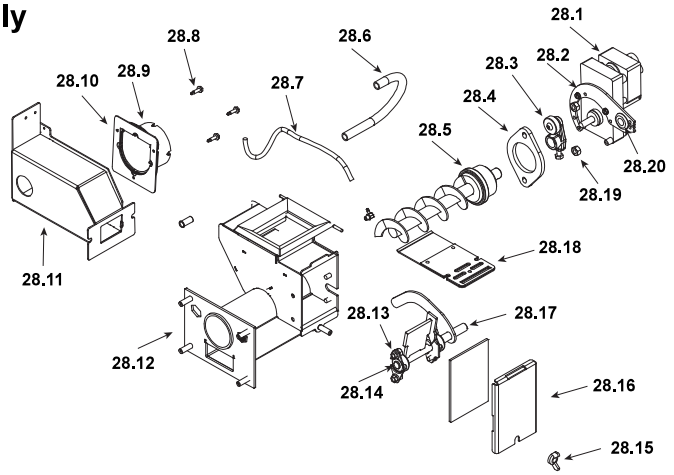

IMPORTANT: THIS IS DATED INFORMATION. Parts must be ordered from a dealer or distributor. **Hearth and Home Technologies does not sell directly to consumers.** Provide model number and serial number when requesting service parts from your dealer or distributor.

ITEM	Description	COMMENTS	PART NUMBER	Stocked at Depot
28	UL Feeder Assembly		1-10-774000A	Y
28.1	Pellet Feeder CW Motor-4 RPM		3-20-60906	Y
28.2	Feeder Motor Bracket w/ Grommet		1-00-247406	Y
28.3	Bearing 3/8 ID X 1-1/8 OD		3-31-3014	Y
	Cast Cam Block		3-00-677154	Y
28.4	Pellet Feeder Bearing RETNR w/Bolts		1-00-04035	Y
28.5	Pellet Feeder Auger		3-50-00565	Y
28.6	Feeder Air Crossover Kit		1-00-67900	Y
	9MM X 13MM Tubing Kit	5 Ft	1-00-511427	Y
28.7	1/8 Silicone Tubing	5 Ft	1-00-5113574	Y
28.8	Screws-HWH TEKS 10 X 3/4	Pkg of 100	3-30-5004-100	Y
28.9	Pellet Air Intake w/Gasket		1-10-06810A	
28.10	Gasket, Feeder Air Intake	Pkg of 6	3-44-72224-6	Y
28.11	Snout Weldment w/Gasket		1-10-774143A	
28.12	Pellet Feeder Weldment		1-10-724132	Y
28.13	Flange 1/4-20 X 3/8	Pkg of 50	3-30-2000-50	Y
28.14	Pillow Block-1/2 in	Pkg of 4	3-31-3614087-4	Y
28.15	Wing Nut, 5/16-18	Pkg of 25	3-30-8012-25	Y
28.16	Short Feed CVR & Gasket		1-00-677122	Y
28.17	Pusher Arm Assembly		1-10-774354W	Y
28.18	Slide Plate		1-10-677121A	Y
28.19	Nut, FHN 5/16-18 Z 5	Pkg of 100	3-30-8005-100	Y
28.20	Grommet-1/2 in ID-Thick	Pkg of 12	3-31-2761-12	
	Gasket Hopper Throat		3-44-677185	Y
	Gasket, Snout	Pkg of 10	3-44-677160-10	Y
	Hopper Switch Feeder Fitting	Pkg of 2	1-00-142818	Y

B. Limited Lifetime Warranty

Hearth & Home Technologies
LIMITED LIFETIME WARRANTY

Hearth & Home Technologies, on behalf of its hearth brands ("HHT"), extends the following warranty for HHT gas, wood, pellet and electric hearth appliances that are purchased from an HHT authorized dealer.

WARRANTY COVERAGE:

HHT warrants to the original owner of the HHT appliance at the site of installation, and to any transferee taking ownership of the appliance at the site of installation within two years following the date of original purchase, that the HHT appliance will be free from defects in materials and workmanship at the time of manufacture. After installation, if covered components manufactured by HHT are found to be defective in materials or workmanship during the applicable warranty period, HHT will, at its option, repair or replace the covered components. HHT, at its own discretion, may fully discharge all of its obligations under such warranties by replacing the product itself or refunding the verified purchase price of the product itself. The maximum amount recoverable under this warranty is limited to the purchase price of the product. This warranty is subject to conditions, exclusions and limitations as described below.

WARRANTY PERIOD:

Warranty coverage for consumers begins at the date of installation. In the case of new home construction, warranty coverage begins on the date of first occupancy of the dwelling or six months after the sale of the product by an independent, authorized HHT dealer/distributor, whichever occurs earlier. However, the warranty shall commence no later than 24 months following the date of product shipment from HHT, regardless of the installation or occupancy date. The warranty period for parts and labor for covered components is produced in the following table.

The term "Limited Lifetime" in the table below is defined as: 20 years from the beginning date of warranty coverage for gas appliances, and 10 years from the beginning date of warranty coverage for wood and pellet appliances. These time periods reflect the minimum expected useful lives of the designated components under normal operating conditions.

Warranty Period		HHT Manufactured Appliances and Venting					
Parts	Labor	Gas	Pellet	Wood	Electric	Venting	Components Covered
1 Year		X	X	X	X	x	All parts and material except as covered by Conditions, Exclusions, and Limitations listed
2 years			X	X			Igniters, auger motors, electronic components, and glass
		X	X	X			Factory-installed blowers
				X			Molded refractory panels
		X					Ignition Modules
3 years			X				Firepots, burnpots, mechanical feeders/auger assemblies
5 years	1 year	X					Vent Free burners, Vent Free ceramic fiber logs, Aluminized Burners
			X	X			Castings and Baffles
6 years	3 years			X			Catalyst - limitations listed
7 years	3 years		X	X			Manifold tubes, HHT chimney and termination
10 years	1 year	X					Burners, logs and refractory
Limited Lifetime	3 years	X	X	X			Firebox and heat exchanger, Grate and Stainless Steel Burners, FlexBurn® System (engine, inner cover,access cover and fireback)
90 Days		X	X	X	X	X	All replacement parts beyond warranty period

WARRANTY CONDITIONS:

- This warranty only covers HHT appliances that are purchased through an HHT authorized dealer or distributor. A list of HHT authorized dealers is available on the HHT branded websites.
- This warranty is only valid while the HHT appliance remains at the site of original installation.
- This warranty is only valid in the country in which the HHT authorized dealer or distributor that sold the appliance resides.
- Contact your installing dealer for warranty service. If the installing dealer or distributor is unable to provide necessary parts, contact the nearest HHT authorized dealer or supplier. Additional service fees may apply if you are seeking warranty service from a dealer other than the dealer from whom you originally purchased the product.
- Check with your dealer in advance for any costs to you when arranging a warranty call. Travel and shipping charges for parts are not covered by this warranty.
- Limited Catalyst Warranty
    - For wood burning products containing a catalyst, the catalyst will be warranted for a six-year period as follows: if the original catalyst or a replacement catalyst proves defective or ceases to maintain 70% of its particulate emission reduction activity (as measured by an approved testing procedure) within 36 months from the purchase date, the catalyst will be replaced for free.
    - From 37 to 72 months a pro-rated credit will be allowed against a replacement catalyst and labor credit necessary to install the replacement catalyst. The proration rate is as follows:

Amount of Time Since Purchase	Credit Towards Replacement Cost
0 - 36 Months	100%
37 - 48 Months	30%
49 - 60 Months	20%
61 - 72 Months	10%

    - Any replacement catalyst will be warranted under the terms of the catalyst warranty for the remaining term of the original warranty. The purchaser must provide the name, address, and telephone number of the location where the product is installed, proof of original purchase date, date of failure, and any relevant information regarding the failure of the catalyst.

WARRANTY EXCLUSIONS:

This warranty does not cover the following:

- Changes in surface finishes as a result of normal use. As a heating appliance, some changes in color of interior and exterior surface finishes may occur. This is not a flaw and is not covered under warranty.
- Damage to printed, plated, or enameled surfaces caused by fingerprints, accidents, misuse, scratches, melted items, or other external sources and residues left on the plated surfaces from the use of abrasive cleaners or polishes.
- Repair or replacement of parts that are subject to normal wear and tear during the warranty period are not covered. These parts include: paint, wood and pellet gaskets, firebricks, grates, flame guides, batteries and the discoloration of glass.
- Minor expansion, contraction, or movement of certain parts causing noise. These conditions are normal and complaints related to this noise are not covered by this warranty.
- Damages resulting from: (1) failure to install, operate, or maintain the appliance in accordance with the installation instructions, operating instructions, and listing agent identification label furnished with the appliance; (2) failure to install the appliance in accordance with local building codes; (3) shipping or improper handling; (4) improper operation, abuse, misuse, continued operation with damaged, corroded or failed components, accident, or improperly/incorrectly performed repairs (5) environmental conditions, inadequate ventilation, negative pressure, or drafting caused by tightly sealed constructions, insufficient make-up air supply, or handling devices such as exhaust fans or forced air furnaces or other such causes; (6) use of fuels other than those specified in the operation instructions; (7) installation or use of components not supplied with the appliance or any other components not expressly authorized and approved by HHT; (8) modification of the appliance not expressly authorized and approved by HHT in writing; and/or (9) interruptions or fluctuations of electrical power supply to the appliance.
- Non-HHT venting components, hearth connections or other accessories used in conjunction with the appliance.
- Any part of a pre-existing fireplace system in which an insert or a decorative gas appliance is installed.
- HHT's obligation under this warranty does not extend to the appliance's capability to heat the desired space. Information is provided to assist the consumer and the dealer in selecting the proper appliance for the application. Consideration must be given to the appliance location and configuration, environmental conditions, insulation and air tightness of the structure.

This warranty is void if:

- The appliance has been over-fired, operated in atmospheres contaminated by chlorine, fluorine, or other damaging chemicals. Over-firing can be identified by, but not limited to, warped plates or tubes, deformation/warping of interior cast iron structure or components, rust colored cast iron, bubbling, cracking and discoloration of steel or enamel finishes.
- The appliance is subjected to prolonged periods of dampness or condensation.
- There is any damage to the appliance or other components due to water or weather damage which is the result of, but not limited to, improper chimney or venting installation.

LIMITATIONS OF LIABILITY

- The owner's exclusive remedy and HHT's sole obligation under this warranty, under any other warranty, express or implied, or in contract, tort or otherwise, shall be limited to replacement, repair, or refund, as specified above. In no event will HHT be liable for any incidental or consequential damages caused by defects in the appliance. Some states do not allow exclusions or limitation of incidental or consequential damages, so these limitations may not apply to you. This warranty gives you specific rights; you may also have other rights, which vary from state to state. EXCEPT TO THE EXTENT PROVIDED BY LAW, HHT MAKES NO EXPRESS WARRANTIES OTHER THAN THE WARRANTY SPECIFIED HEREIN. THE DURATION OF ANY IMPLIED WARRANTY IS LIMITED TO DURATION OF THE EXPRESSED WARRANTY SPECIFIED ABOVE.

C. Loss of Power

Minimizing Smoke During Loss of Power Using Battery Back-up

Harman® strongly recommends installing battery back-up to minimize entry of smoke into the room in the event of power loss.

Your pellet/biomass burning appliance relies on a combustion blower to remove exhaust. A power failure will cause the combustion blower to stop. This may lead to exhaust seeping into the room. Vertical rise in the venting may provide natural draft. It is, however, no guarantee against leakage.

There is one Harman® approved UPS option for your appliance:

Uninterruptible Power Supply UPS battery back-ups are available online or at computer and office equipment stores. Your Harman® appliance with Rev E or later software available beginning in November 2010 may be plugged directly into a Harman® approved UPS:

- **TrippLite model INTERNET750U** is tested and approved. Other brands or models may not be compatible.

When power is lost, a fully charged UPS will power a safe, combustion blower only shut-down. Your appliance will pulse the blower every few seconds to clear exhaust until the fire is out. **NOTE: The UPS provides safe shut-down only. It is not intended for continued operation.**

- A Inverter/Charger connects to a 12 volt deep cycle battery that will run your appliance for up to eight (8) hours. It includes a trickle charge feature that keeps your battery charged when power is available. **NOTE: I**f the power is out for longer than battery life, smoke leakage may still occur unless your stove has been safely shut down.

For an approved Inverter/Charger refer to www. harmanstoves.com.

Your appliance will recognize when power is restored. What happens depends on ESP temperature and whether it is equipped with automatic ignition:

- **In "Automatic" Mode**, units equipped with automatic ignition will respond to the set point and ESP temperature and resume normal operation.
- **In "Idle" Mode**, or for units without automatic ignition:
  - **I**f the ESP is cool, the appliance will remain shut down.
  - **I**f the fire is out and the ESP is still warm, the feeder may restart. Since the fire is out, the ESP temperature will not rise. The unit will then shut-down, and may flash a six-blink status error. (See ESP error codes)
  - **I**f the fire is still burning, it will resume normal operation.

Contact your dealer if you have questions about UPS compatibility with your appliance.

WARNING

Use only Harman® approved battery back-up devices. Other products may not operate properly, can create unsafe conditions or damage your appliance.

CAUTION

Always keep appliance doors and hopper lid closed and latched during operation and during power failures to minimize risk of smoke or burn-back.

D. Emergency Manual Ignition

Harman® pellet stoves and inserts should be lit using the automatic ignition system. This is the safest and most reliable way for igniting the unit. In the event the automatic igniter is not functioning, the steps below may be followed to manually light the stove or insert in the "Constant Burn" mode. Manual lighting is for emergency purposes only, and the igniter should be repaired or replaced as soon as practical.

WARNING

Only use firestarter commercially marketed for pellet stoves and inserts, including wax coated wood chips, pellet starter gel and pellet igniter blocks. Use of any other type of firestarter is prohibited.

To avoid serious injury or death read and follow manufacturer's warning and instructions for use of firestarter. Use of firestarter is only permitted when performing a cold start.

Never attempt to manually light a stove or insert that has been operated recently and is not at room temperature. If automatic ignition was attempted, be sure to give the stove or insert at least 30 minutes or longer to cool to room temperature.

Be sure that the stove or insert is in the "Igniter - Disabled" mode of operation.

Once all the precautions have been taken, follow these steps:

1. On the touch control, select the Burn Mode icon then select "Constant Burn".
2. Arrow back and select the Igniter icon then select "Manual" for the ignition method. Select the Home Icon to go back to the Main Menu.
3. Fill burn pot with pellets, only half way. (Do Not Over Fill).
4. Add firestarter to pellets following manufacturer's instructions.
5. Light pellet gel with a match, and close the door, touch the On/Off icon on the home screen. Operation will begin when the fire reaches the proper temperature.

E. Troubleshooting

ISSUES	SOLUTIONS
Stove does not feed	• No fuel in hopper. • Firebox draft may be too low for sensing switch in feeder circuit to operate. **Check for closed doors**, loose or missing gasket on doors or hopper lid. • Feed motor will not run until the ESP control senses a certain temperature. Maybe you did not put enough fuel or starting gel in the burn pot before manually lighting the fire (In Constant Burn, Manual Light Only.) • Restriction in the hopper or feeder. Remove all fuel and examine. Clear the obstruction. • Feed motor has failed.
Partially burned pellets	• Feed rate too high. • Poor air to fuel mixture. (Check burn pot clean-out cover and air intake). • Burn pot may need to be cleaned. • Combination of all the above.
Smoke smell	Seal the vent pipe joints and connection to stove with silicone. The exhaust vent is the only part of the system that is under positive pressure.
Fire has gone out	• No fuel in hopper. • Draft is too low, blocked flue. • Something is restricting fuel flow. • Hopper lid not closed properly. • Feed motor or combustion fan has failed.
Smoke is visible coming out of vent	• Air-fuel ratio is too rich. - Feed rate too high. - Draft too low caused by a gasket leak.
Low heat output	• Feed rate too low • Draft too low because of gasket leak. • Poor quality or damp pellets • Combination of 1 and 2.

F. Contact Information

HARMAN®
a brand of
Hearth & Home Technologies
352 Mountain House Road, Halifax, PA 17032
www.harmanstoves.com

Please contact your Harman® dealer with any questions or concerns.
For the location of your nearest Harman® dealer,
please visit www.harmanstoves.com.

- NOTES -

NOTICE

DO NOT DISCARD THIS MANUAL

- Important operating and maintenance instructions included.
- Read, understand and follow these instructions for safe installation and operation.
- Leave this manual with party responsible for use and operation.

Printed in U.S.A.

Installation Manual

Installation and Appliance Setup

INSTALLER: Leave this manual with party responsible for use and operation.
OWNER: Retain this manual for future reference.

NOTICE: SAVE THESE INSTRUCTIONS

HARMAN®

BUILT TO A STANDARD, NOT A PRICE

Model(s):

P35i-C Pellet Insert

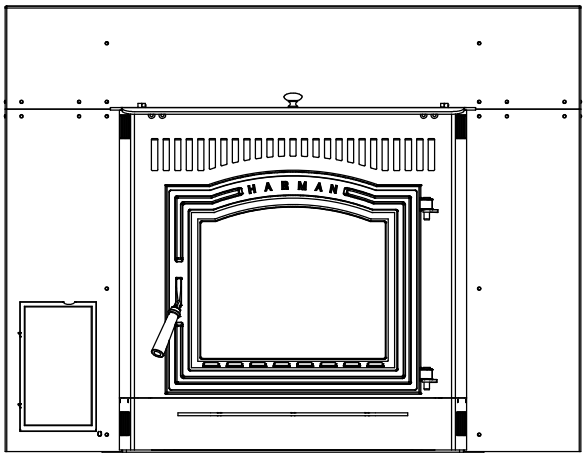

Pellet Fuels Institute

NATIONAL FIREPLACE INSTITUTE

⚠ CAUTION

Check building codes prior to installation.

- Installation MUST comply with local, regional, state and national codes and regulations.
- Contact local building or fire officials about restrictions and installation inspection requirements in your area.

⚠ CAUTION

Tested and approved for wood pellets only burning of any other type of fuel voids your warranty. When burning higher ash content pellets more frequent cleanings may be required.

⚠ WARNING

Please read this entire manual before installation and use of this pellet fuel-burning room heater.
Failure to follow these instructions could result in property damage, bodily injury or even death.

- Do not store or use gasoline or other flammable vapors and liquids in the vicinity of this or any other appliance.
- Do not overfire - If any external part starts to glow, you are overfiring. Reduce feed rate. Overfiring will void your warranty.
- Comply with all minimum clearances to combustibles as specified. Failure to comply may cause house fire.

⚠ WARNING

HOT SURFACES!

Glass and other surfaces are hot during operation and cool down.

Hot glass will cause burns.

- Do not touch glass until it is cooled
- NEVER allow children to touch glass
- Keep children away
- CAREFULLY SUPERVISE children in same room as stove.
- Alert children and adults to hazards of high temperatures.

  High temperatures may ignite clothing or other flammable materials.
- Keep clothing, furniture, draperies and other flammable materials away.

NOTE

To obtain a French translation of this manual, please contact your dealer or visit www.harmanstoves.com

Pour obtenir une traduction française de ce manuel, s'il vous plaît contacter votre revendeur ou visitez www.harmanstoves.com

⚠ Safety Alert Key:

- ***DANGER!*** Indicates a hazardous situation which, if not avoided will result in death or serious injury.
- ***WARNING!*** Indicates a hazardous situation which, if not avoided could result in death or serious injury.
- ***CAUTION!*** Indicates a hazardous situation which, if not avoided, could result in minor or moderate injury.
- ***NOTICE:*** Indicates practices which may cause damage to the stove or to property.

TABLE OF CONTENTS

Installation Standard Work Checklist 3

1 Product Specific and Important Safety Information
A. Appliance Certification 4
B. Glass Specifications 4
C. Mobile Home Approved 4
D. BTU & Efficiency Specifications 4
E. Non-Combustible Materials Specification. 5
F. Combustible Materials Specification 5
G. Electrical Codes 5
H. California 5

2 Getting Started
A. Design and Installation Considerations 6
B. Tools and Supplies Needed 7
C. Inspect Appliance and Components. 7

3 Clearances
A. Appliance Dimension Diagram. 8
B. Clearances to Combustibles & Floor Protection. 9
C. Minimum Opening - Masonry & Manufactured Fireplaces . 9

4 Termination Location and Vent Information
A. Vent Termination Design 10
B. Venting & Use of Elbows 14
C. Battery Back-up Power. 15
D. Outside Air 16
E. Locating Your Appliance and Chimney. 16
F. Negative Pressure 17
G. Avoiding Smoke & Odors 17
H. Mobile Home Installation 19
I. Fire Safety 20
J. Inspect Appliance & Components 20

5 Appliance Setup
A. Unpacking Unit. 21
B. Control Board Installation. 22
C. Securing Mounting Frame 22
D. Routing the Power Cord. 22
E. Installing the Venting 23
F. Installing the Body into the Mounting Frame 23
G. Room Sensor Installation. 23
H. Flame Guide Extension 24
I. Firebox Draft and Combustion Fan RPM. 25

6 Reference Materials
A. Safety Reminders. 26
B. Wiring Diagram. 27

➔ = Contains updated information

Installation Standard Work Checklist

ATTENTION INSTALLER:

Follow this Standard Work Checklist

This standard work checklist is to be used by the installer in conjunction with, not instead of, the instructions contained in this installation manual.

Customer: _____
Lot/Address: _____
_____
Model: _____

Date Installed: _____
Location of Stove: _____
Installer: _____
Dealer/Distributer Ph # _____
Serial Number: _____

WARNING! Risk of Fire or Explosion! Failure to install appliance to these instructions can lead to a fire or explosion.

Appliance Install Section 3	**YES**	**IF NO, WHY?**
Required non-combustible floor protection	☐	_____
Verified clearances to combustible.	☐	_____
Unit is Leveled and secured.	☐	_____
Venting/Chimney Section 4		
Venting Configuration complies to vent diagrams.	☐	_____
Venting installed, sealed and secured in place with proper clearances.	☐	_____
Exterior wall/roof flashing installed and sealed	☐	_____
Terminations installed and sealed.	☐	_____
Electrical Section 1		
120 VAC unswitched power provided to the appliance.	☐	_____
Check outlet with multi-meter for proper voltage. (115-120 VAC)	☐	_____
Record voltage reading: _____		
Appliance Setup Section 5		
All packaging and protective materials are removed	☐	_____
Accessories installed properly	☐	_____
Manual bag and all it's contents are removed from inside the appliance and given to party responsible for use and operation	☐	_____
Started appliance and verified that all motors and blowers operate as they should.	☐	_____
Checked draft using a Manometer. Record readings: _____	☐	_____

Hearth and Home Technologies recommends the following:
Photographing the installation and copying this checklist for your file.
This checklist remain visible at all times on the appliance until the installation is complete.

Comments: Further description of the issues, who is responsible (Installer/Builder/Other Trades, etc.) and corrective action needed _____

_____

_____

Comments communicated to party responsible_____ by _____ on _____
(Builder / Gen Contractor) (Installer) (Date)

04/17

1 Product Specific and Important Safety Information

A. Appliance Certification

MODEL:	P35i-C Pellet Insert
LABORATORY:	OMNI-Test Laboratories, Inc., PFS-TECO
REPORT NO.	135-S-25-6.2, 0135PN025S, F19-531
TYPE:	Pellet Fueled Insert/Supplementary For Residential Use
STANDARD(s):	ASTM E 1509-12 (2017), ULC-S628-00, ASTM E 2515-11, ASTM E 2779-10

NOTE: This installation must conform with local codes. In the absence of local codes you must comply with the ASTM E1509-12, ULC-S628-93 & **(UM) 84-HUD**

The P35i-C Pellet Insert is certified to comply with 2020 EPA particulate emission standards.

Note: This installation must conform with local codes. In the absence of local codes you must comply with the **ASTM E 1509-2012, ULC S628-93, (UM) 84-HUD**

B. Glass Specifications

This appliance is equipped with 5mm ceramic glass. Replace glass only with 5mm ceramic glass. Please contact your dealer for replacement glass.

C. Mobile Home Approved

This appliance is approved for mobile home installations when not installed in a sleeping room and when an outside combustion air inlet is provided.

The appliance must be properly grounded to the frame of the mobile home using a minimum of 8 AWG copper solid or stranded, insulated or bare wire or equivalent and use only listed pellet vent, Class “PL” connector pipe.

A Harman® Outside Air Kit must be installed in a mobile home installation.

⚠ CAUTION

THE STRUCTURAL INTEGRITY OF THE MANUFACTURED HOME FLOOR, WALL, AND CEILING/ROOF MUST BE MAINTAINED.

DO NOT INSTALL IN SLEEPING ROOM.

D. BTU & Efficiency Specifications

EPA Certification Number:	
EPA Certified Emissions:	1.5 g/hr
***LHV Tested Efficiency:**	74.2%
****HHV Tested Efficiency:**	68.2%
*****EPA BTU Output:**	9,600 - 28,800
******BTU Input**	12,800 - 38,400
Vent Size:	4 Inch
Hopper Capacity:	62 lbs
Fuel	Wood Pellet

*Weighted average LHV efficiency using data collected during EPA emissions test.

**Weighted average HHV efficiency using data collected during EPA emissions test.

***A range of BTU outputs based on EPA Default Efficiency and the burn rates from the low and high EPA tests.

****Based on the maximum feed rate per hour multiplied by approximately 8600 BTU’s which is the average BTU’s from a pound of pellets.

This wood heater has a manufacturer-set minimum low burn rate that must not be altered. It is against federal regulations to alter this setting or otherwise operate this wood heater in a manner inconsistent with operating instructions in this manual.

This wood heater needs periodic inspection and repair for proper operation. It is against federal regulations to operate this wood heater in a manner inconsistent with operating instructions in this manual.

Note: Some generator or battery back-up systems may not be compatible with the micro-processor electronics on this appliance. Please consult the power supply manufacturer for compatible systems.

Note: Hearth & Home Technologies, manufacturer of this appliance, reserves the right to alter its products, their specifications and/or price without notice.

Harman® is a registered trademark of Hearth & Home Technologies.

E. Non-Combustible Materials Specification

Material which will not ignite and burn. Such materials are those consisting entirely of steel, iron, brick, tile, concrete, slate, glass or plasters, or any combination thereof.

Materials that are reported as passing **ASTM E 136, Standard Test Method for Behavior of Materials in a Vertical Tube Furnace at 750º C** and **UL763** shall be considered non-combustible materials.

F. Combustible Materials Specification

Materials made of or surfaced with wood, compressed paper, plant fibers, plastics, or other material that can ignite and burn, whether flame proofed or not, or plastered or unplastered shall be considered combustible materials.

G. Electrical Codes

120 VAC, 60 Hz, Start 5.0 Amps, Run 4.0 Amps

Note: Some generator or battery back-up systems may not be compatible with the micro-processor electronics on this appliance. Please consult the power supply manufacturer for compatible systems.

WARNING! Risk of Fire! *Hearth & Home Technologies disclaims any responsibility for, and the warranty and agency listing will be voided by the below actions.*

DO NOT:

- *Install or operate damaged appliance*
- *Modify appliance*
- *Install other than as instructed by Hearth & Home Technologies*
- *Operate the appliance without fully assembling all components*
- *Overfire*
- *Install any component not approved by Hearth & Home Technologies*
- *Install parts or components not Listed or approved.*
- *Disable safety switches*

Improper installation, adjustment, alteration, service or maintenance can cause injury or property damage.

For assistance or additional information, consult a qualified installer, service agency or your dealer.

H. California

WARNING

This product and the fuels used to operate this product (wood), and the products of combustion of such fuels, can expose you to chemicals including carbon black, which is known to the State of California to cause cancer, and carbon monoxide, which is know to the State of California to cause birth defects or other reproductive harm. For more information go to: www.P65Warnings.ca.gov

NOTE: Hearth & Home Technologies, manufacturer of this appliance, reserves the right to alter its products, their specifications and/or price without notice.

Harman® is a registered trademark of Hearth & Home Technologies.

2 Getting Started

A. Design and Installation Considerations

1. Appliance Location

NOTICE: *Check building codes prior to installation.*

- Installation MUST comply with local, regional, state and national codes and regulations.
- Consult insurance carrier, local building inspector, fire officials or authorities having jurisdiction over restrictions, installation inspection and permits.

It is a good idea to plan your installation on paper, using exact measurements for clearances and floor protection, before actually beginning the installation

Consideration must be given to:

- Safety, convenience, traffic flow
- Placement of the chimney and chimney connector.
- If you are not using an existing chimney, place the appliance where there will be a clear passage for a factory-built listed chimney through the ceiling and roof.
- Installing an optional outside air kit would affect the location of the vent termination.

Suitable fireplaces for installation:

- Masonry Fireplace
- Existing Factory Built Wood Burning Fireplace
- Harman® Zero Clearance Cabinet - Part #1-00-574323

EXCEPTION: Masonry or steel, including the damper plate, may be removed from the smoke shelf and adjacent damper frame if necessary to accommodate a chimney liner, provided that their removal will not weaken the structure of the fireplace and chimney, and will not reduce protection for combustible materials to less than that required by the National Building Code.

Since pellet exhaust can contain ash, soot or sparks, you must consider the location of:

- Windows
- Air Intakes
- Air Conditioner
- Overhangs, soffits, porch roofs, adjacent walls
- Landscaping, vegetation

When locating vent and venting termination, vent above roof line when possible.

Warning! Risk of Fire *Damaged parts could impair safe operation. Do NOT install damaged, incomplete or substitute components.*

NOTICE: *Locating the appliance in a location of considerable air movement can cause intermittent smoke spillage from appliance. Do not locate appliance near:*

- *Frequently open doors*
- *Central heat outlets or returns*

Installation and service of this appliance should be performed by qualified personnel. Hearth & Home Technologies recommends HHT Factory Trained or NFI Certified professionals.

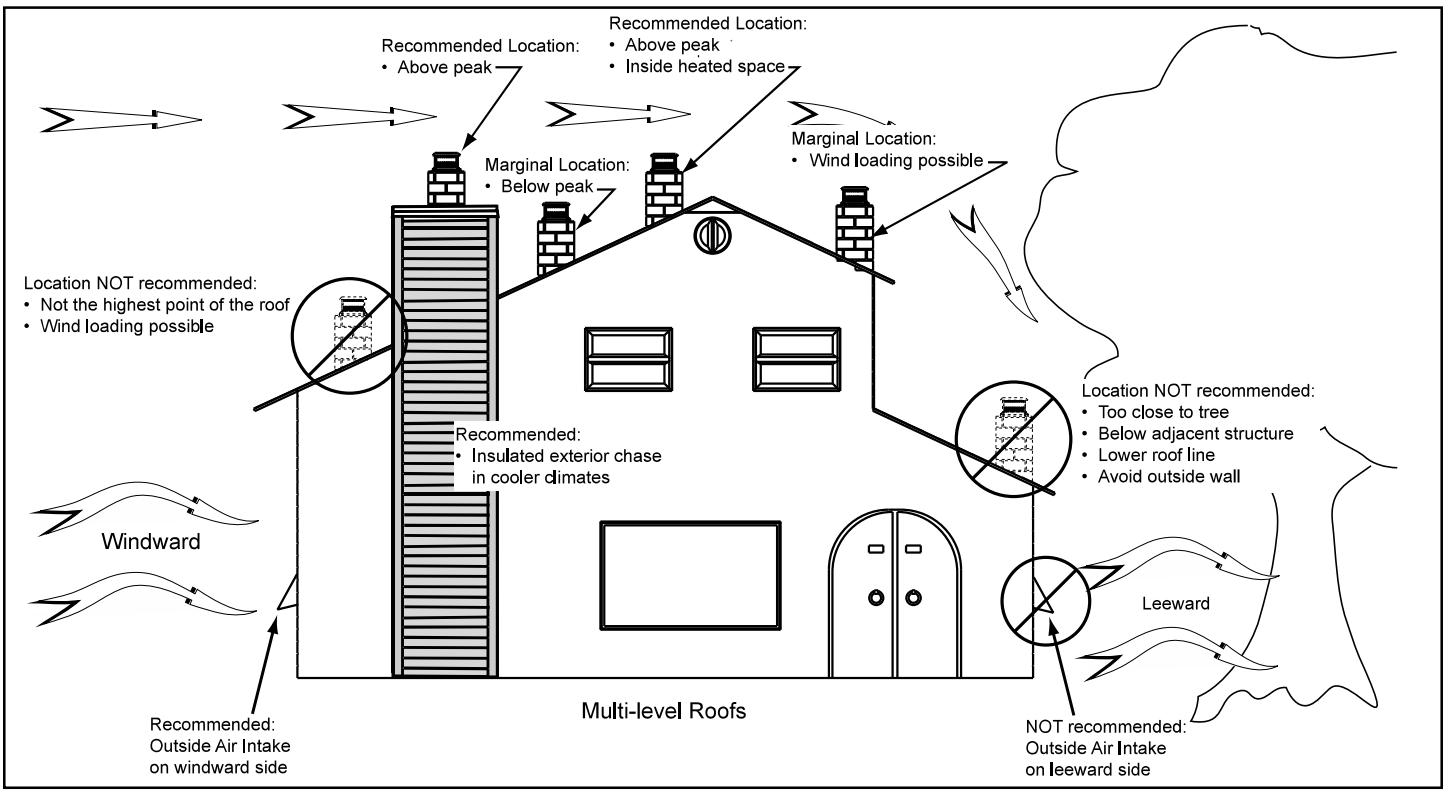

Figure 2.1

B. Tools And Supplies Needed

Tools and building supplies normally required for installation, unless installing into an existing masonry fireplace:

Reciprocating Saw	Gloves
Hammer	Safety Glasses
Phillips Screw driver	Electric Drill & Bits
Tape Measure	
Level	**May also need:**
Non-Combustible Sealant Material	Vent Support Straps
	Venting Paint

C. Inspect Appliance and Components

- Carefully remove the appliance and components from the packaging.
- The vent system components and decorative doors and fronts may be shipped in separate packages.
- If optional log set is purchased, the log bracket must be installed prior to installing the log set.
- Report to your dealer any parts damaged in shipment, particularly the condition of the glass.
- **Read all of the instructions before starting the installation. Follow these instructions carefully during the installation to ensure maximum safety and benefit.**

WARNING

RISK OF FIRE OR EXPLOSION! Damaged parts could impair safe operation. DO NOT install damaged, incomplete or substitute components. Keep appliance dry.

Hearth & Home Technologies disclaims any responsibility for, and the warranty will be voided by, the following actions:

- Installation and use of any damaged appliance or vent system component.
- Modification of the appliance or vent system.
- Installation other than as instructed by Hearth & Home Technologies.
- Installation and/or use of any component part not approved by Hearth & Home Technologies.

Any such action may cause a fire hazard.

WARNING

Risk of Fire, Explosion or Electric Shock! DO NOT use this appliance if any part has been under water. Call a qualified service technician to inspect the appliance and to replace any part of the control system that has been under water.

3 Clearances

A. Appliance Dimension Diagram

Dimensions are actual appliance dimensions. Use for reference only.

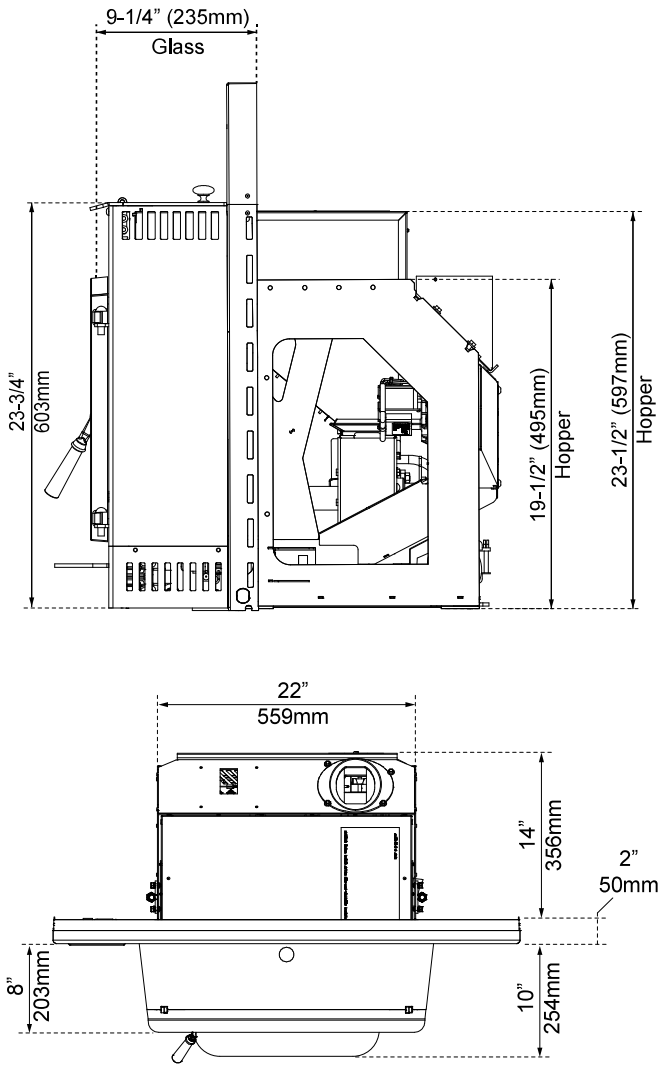

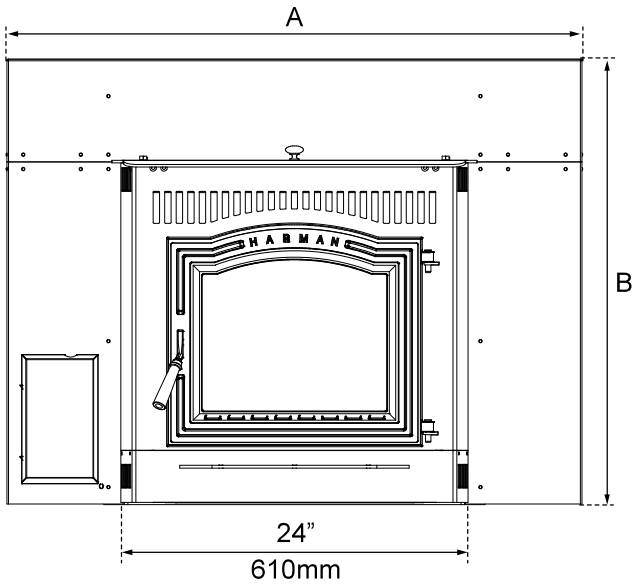

	Standard Surround #1-00-774221	Oversized Surround #1-00-774250
A	40" (1016 mm)	46" (1168 mm)
B	31" (787 mm)	34" (864 mm)

Figure 3.1

B. Clearances to Combustibles & Floor Protection

When selecting a location for the appliance it is important to consider the required clearances to walls (see Figure 3.2).

WARNING! Risk of Fire or Burns! *Provide adequate clearance around air openings and for service access. Due to high temperatures, the appliance should be located out of traffic and away from furniture and draperies.*

NOTICE: *Illustrations reflect typical installations and are FOR DESIGN PURPOSES ONLY. Illustrations/diagrams are not drawn to scale. Actual installation may vary due to individual design preference.*

* Floor protection must be used from hearth opening to 6" (152mm) in front of door glass and 6" (152mm) to each side of the stove body OR 8" (203mm) to sides to protect combustibles from hot ashes. A minimum size will be 8-7/8" deep by 24-5/8" wide and be made of a non-combustible material or meet UL approval.

Location		Inches	Millimeters
A	Insert to combustible sidewall	13	330
B	Surround top to face trim	0	0
C	Surround side to face trim	1	25
D	Insert top to (max) 12" mantel	12	305
E	Door opening to front	6	152
F	Door opening to side	6	152

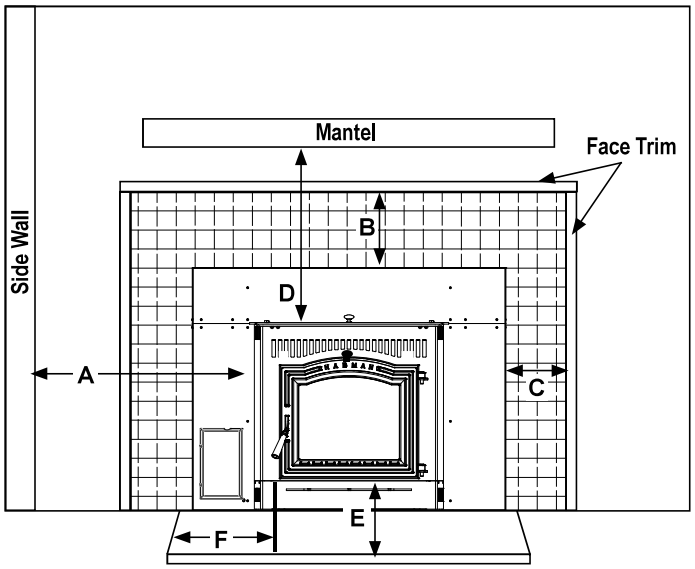

Figure 3.2

C. Minimum Opening - Masonry and Manufactured Fireplaces

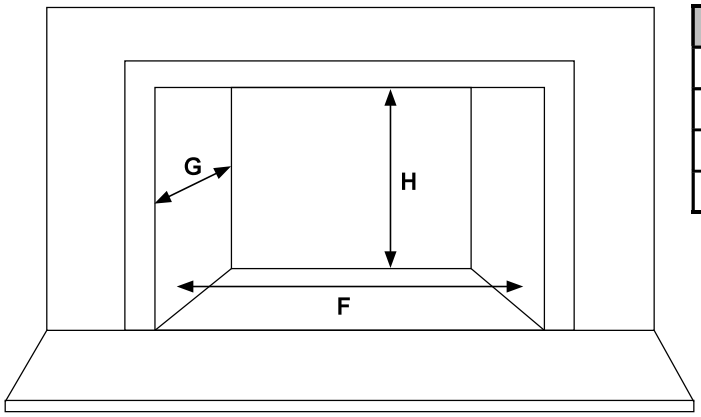

Location		Inches	Millimeters
F	Minimum Width	24	609
G	Minimum Depth	14-1/2	368
H	Minimum Height #1-70-774235	23-1/2	597
H	Minimum Height #1-70-774195	19-1/2	495

4 Termination Location and Vent Information

A. Venting Termination Design

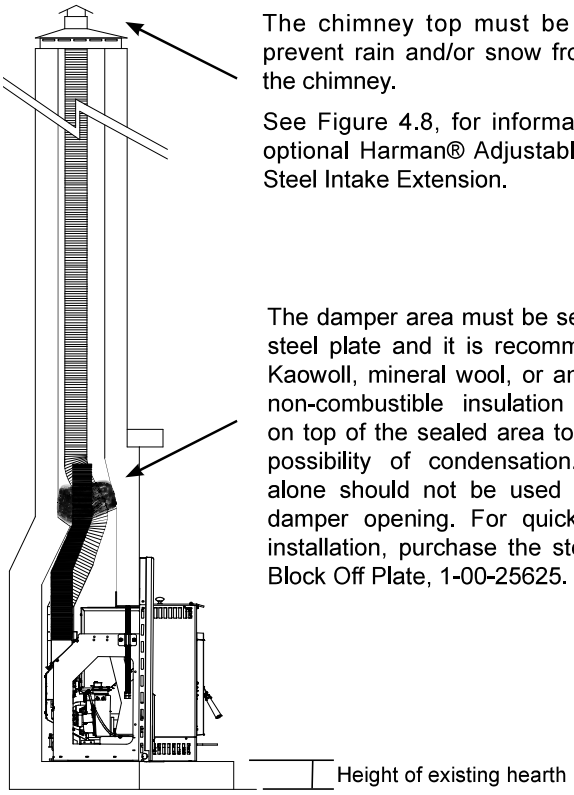

The chimney top must be capped to prevent rain and/or snow from entering the chimney.

See Figure 4.8, for information on the optional Harman® Adjustable Stainless Steel Intake Extension.

The damper area must be sealed with a steel plate and it is recommended that Kaowoll, mineral wool, or an equivalent non-combustible insulation be placed on top of the sealed area to reduce the possibility of condensation. Insulation alone should not be used to seal the damper opening. For quick and easy installation, purchase the steel Harman Block Off Plate, 1-00-25625.

Figure 4.1

#1 Installing into an existing fireplace chimney

This method provides excellent venting with 100% outside air which is the most efficient operation of this unit. This method also provides natural draft in the event of a power failure.

A 4" stainless steel flex pipe is needed for the flue pipe, and 3" aluminum or Stainless Steel Flex Pipe is used for the intake.

⚠ WARNING

CHIMNEY CONNECTOR PIPE MAY NOT PASS THROUGH CONCEALED SPACES INCLUDING AN ATTIC, ROOF SPACE, CLOSET, FLOOR OR CEILING.

⚠ WARNING

DO NOT REMOVE BRICKS OR MORTAR FROM THE EXISTING FIREPLACE.

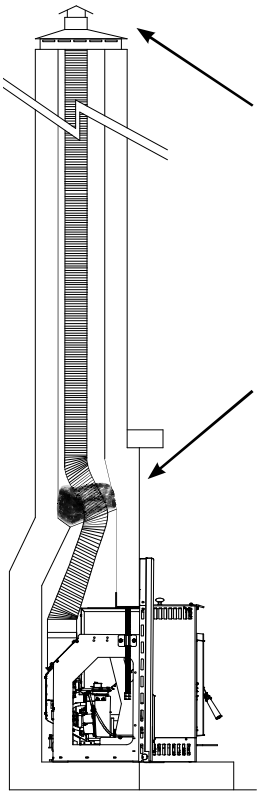

The chimney top must be capped to prevent rain and/or snow from entering the chimney.

The damper area must be sealed with a steel plate and it is recommended that Kaowoll, mineral wool, or an equivalent non-combustible insulation be placed on top of the sealed area to reduce the possibility of condensation. Insulation alone should not be used to seal the damper opening. For quick and easy installation, purchase the steel Harman Block Off Plate, 1-00-25625.

Figure 4.2

#2 Installing into an existing fireplace chimney

This method provides excellent venting for normal operation. This method also provides natural draft in the event of a power failure.

A cap should be installed on the chimney to keep out rain.

Combustion air is provided from the living area and enters the feed system from around the wing and stove body spaces.

⚠ WARNING

DO NOT REMOVE BRICKS OR MORTAR FROM THE EXISTING FIREPLACE.

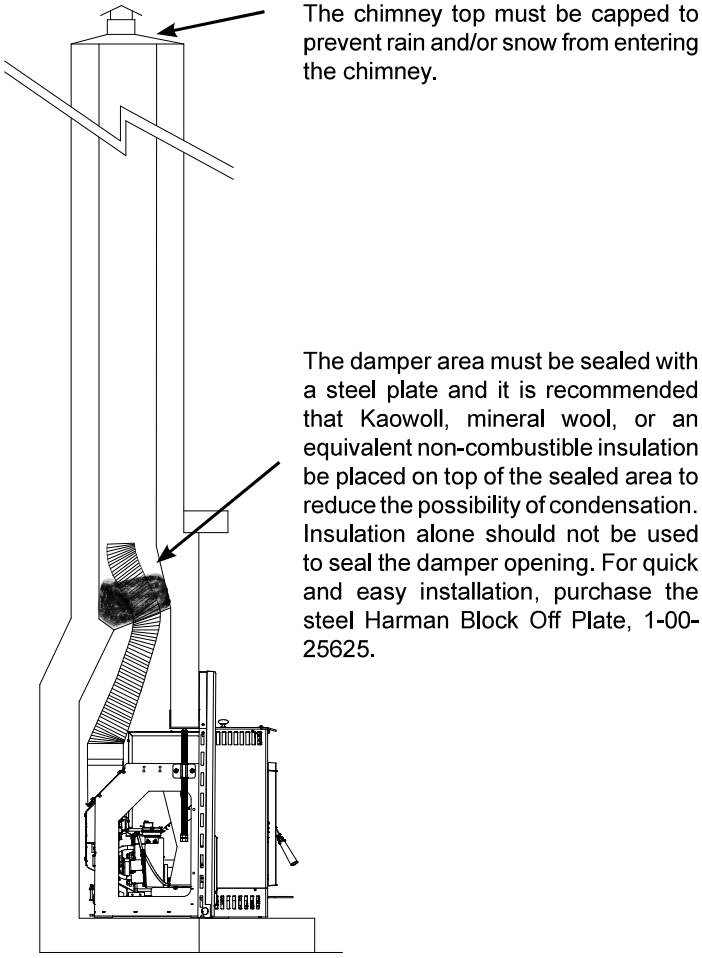

Figure 4.3

#3 Installing into an existing chimney

This method provides excellent venting for normal operation. This method also provides natural draft in the event of a power failure. If the chimney condition is questionable you may want to install a liner as in method #2.

This is the minimum allowed vent pipe using 4" stainless steel flex pipe.

The vent pipe must extend past the damper sealing area by at least 12 inches.

Note: The insulation material must not be allowed to expand to the point that it covers the end of the flex pipe.

The chimney should be capped with any style cap that will not allow rain or snow to enter.

In some places in the US and Canada, it is required that the vent pipe extend all the way to the top of the chimney. Check your local codes.

⚠ WARNING

CHIMNEY CONNECTOR PIPE MAY NOT PASS THROUGH CONCEALED SPACES INCLUDING AN ATTIC, ROOF SPACE, CLOSET, FLOOR OR CEILING.

⚠ WARNING

DO NOT REMOVE BRICKS OR MORTAR FROM THE EXISTING FIREPLACES.

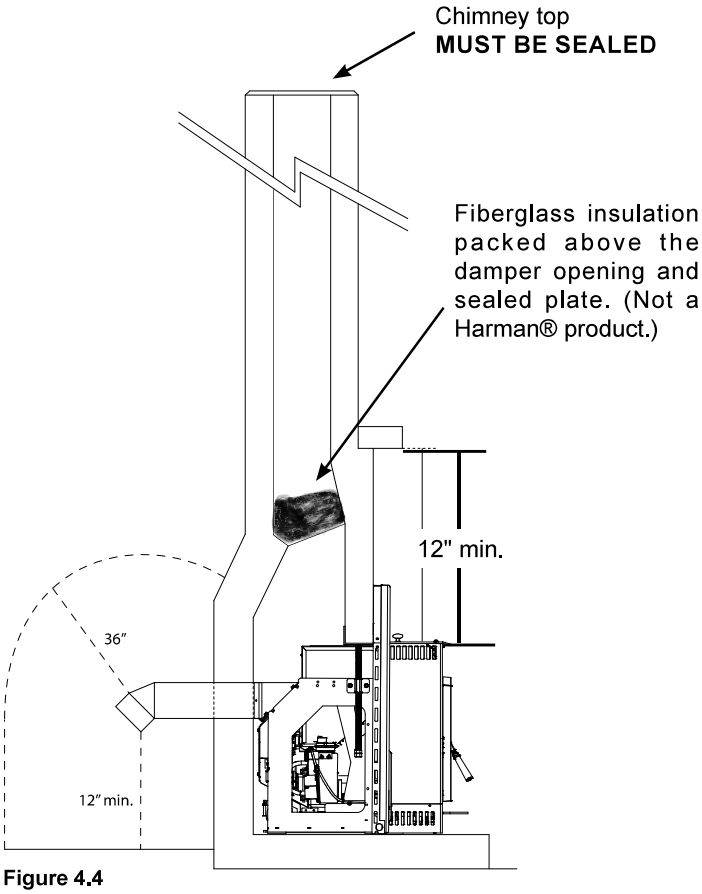

Figure 4.4

#4 Preferred method

This method provides excellent venting for normal operation and in a fireplace with inadequate flue space, or a height of over 30 feet. 4" PL vent pipe should be used with the needed swivel flue stub.

Note: With a 100% outside air kit the outside air can be installed in the same manner as the flue pipe.

Stainless Steel Outside Air Inlet Cover
Part# 1-10-09542

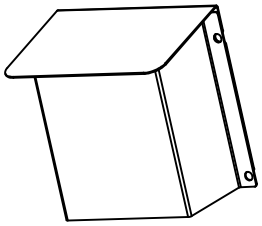

⚠ CAUTION

KEEP COMBUSTIBLES (SUCH AS GRASS, LEAVES, ETC.) AT LEAST 3 FEET AWAY FROM THE FLUE OUTLET ON THE OUTSIDE OF THE BUILDING.

IN CANADA: This fireplace insert must be installed with a continuous chimney liner of a minimum 4" diameter extending from the insert to the top of the chimney. The chimney liner must conform to the Class 3 requirements of CAN/ULC-S635, Standard for Lining Systems for Existing Masonry or Factory Built Chimneys and Vents, or CAN/ULC-S640, Standard for Lining Systems for New Masonry Chimneys.

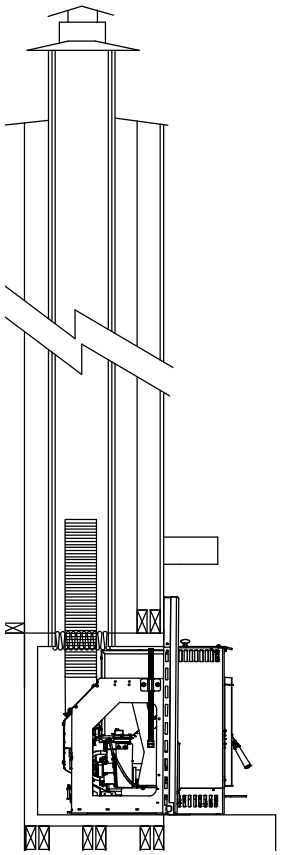

Figure 4.5

Installing the P35i-C Pellet Insert into an existing factory built wood burning fireplace

When installing the P35i-C Pellet Insert into a factory built wood burning fireplace, the Manufactured Fireplace Installation Kit #1-00-574205 must be used. In addition, several things need to be taken into consideration.

The size of the fireplace opening. Will the unit fit into the opening? Many of these units have metal smoke shields inside the top that can be removed to gain height. Often the side and rear refractory can be removed to gain depth and width. In some circumstances, the front lower lip or grill work may also be removed. Be sure and follow the guidelines in the kit instructions. Floor protection guidelines, as listed on Figure 3.2 must also be followed.

The factory built chimney must be listed per UL 127 (US) and meet type HT requirements of UL 103 (US). Factory Built fireplace chimneys tested to UL 127-98 may be, at the fireplace manufacturers option, tested to the same criteria as UL 103HT requirements. If the chimney is not listed as meeting HT requirements, or if the factory built fireplace was tested prior to 1998, a full height listed chimney liner must be installed from the appliance flue collar to the chimney top. Liner must meet high temperature (2100° F) per UL1777 (US). The liner must be securely attached to both the flue collar and the chimney cap. To prevent room air passage to the chimney cavity of the fireplace, seal the damper area around the chimney liner with fiberglass batting.

Note: If the Harman® P35i-C Pellet Insert is installed into a factory built wood burning fireplace, this label (Harman® part #3-90-674204) MUST be attached to the altered fireplace. This label is included in the Manufactured fireplace installation kit.

THIS FIREPLACE HAS BEEN ALTERED TO ACCOMMODATE A FIREPLACEINSERTANDSHOULDBEINSPECTEDBYAQUALIFIED PERSON PRIOR TO REUSE AS A CONVENTIONAL FIREPLACE

Additionally, the firebox floor of the Zero Clearance Wood or Gas Fireplace may be removed down to the outer metal shell of the fireplace if kit 1-00-574305 is used. The kit includes installation instructions and all materials needed to remove the firebox floor and still maintain a safe, compliant installation. Be certain to contact local code enforcement officials before beginning any modifications, as they may not be reversible in many cases.

OPTIONAL HOPPER CONFIGURATIONS FOR SMALLER FIREPLACE OPENINGS:

The Harman® P35i-C Pellet Insert can be factory built with shorter hopper configurations.

The standard requires a 23-1/2" opening. Part #1-70-774235

Option 1: Requires a 19-1/2" opening height. Part #1-70-774195

Keep in mind the hopper capacities will decrease with the optional heights.

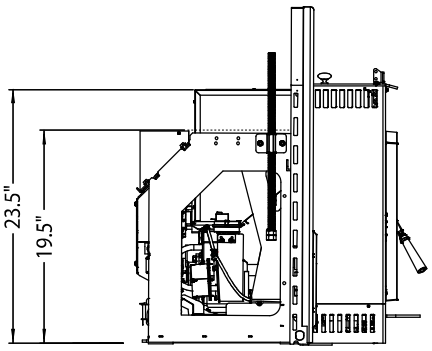

Installing the P35i-C Pellet Insert into a Harman Zero Clearance Cabinet

If you don't have a factory built fireplace or masonry fireplace, the P35i-C Pellet Insert can also be installed into the Harman Zero Clearance Cabinet, Part # 1-00-774235. This is the **only permissible** way to install the P35i-C Pellet Insert without a suitable fireplace. After the Harman Zero Clearance Cabinet is installed, type PL vent pipe, wall pass-throughs and terminations are used (**Note:** Flex pipe is not approved these types of installation). Detailed installation instructions are included with the Zero Clearance Cabinet. These same installation instructions can also be found on-line at www.harmanstoves.com.

Below are two sample installations using the Harman Zero Clearance Cabinet.

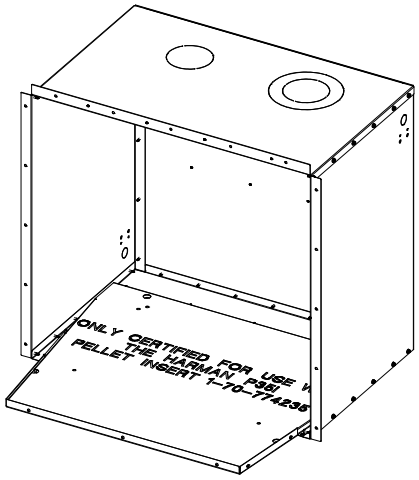

Harman Zero Clearance Cabinet

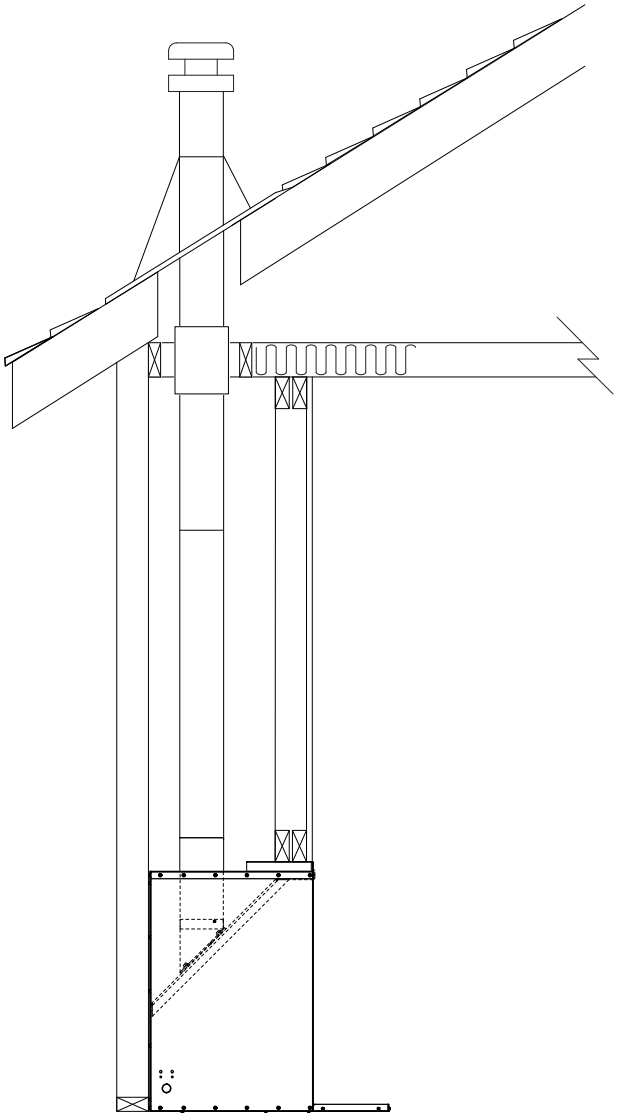

PL Vent Pipe installed through a ceiling.

Requirements for Terminating the Venting through an Exterior Wall.

The clearance to a window or door that may be opened must be a minimum of 48" to the side and 48" below the window/door, and 12" above the window/door. (**with outside air installed, 12" to the side or below**)

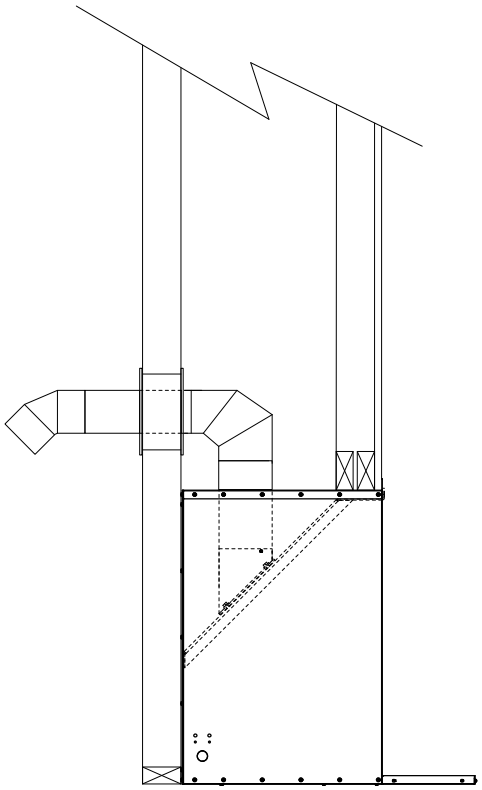

PL Vent Pipe installed through an exterior wall

B. Venting & Use of Elbows

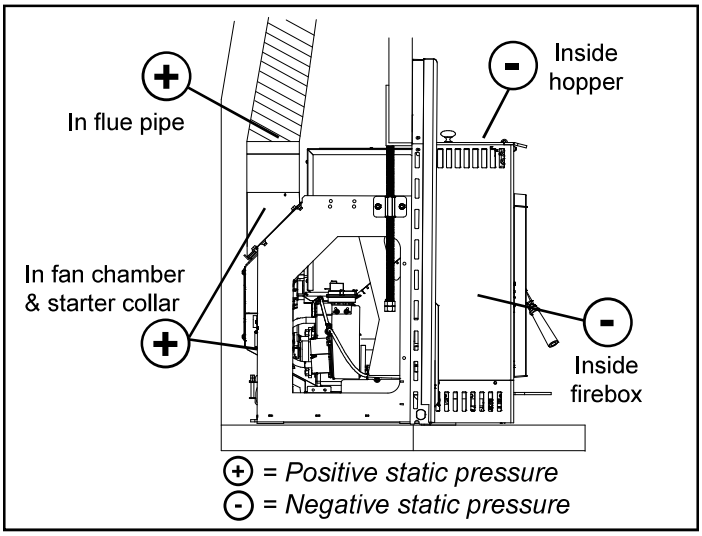

Figure 4.6

A combustion blower is used to extract the combustion gases from the firebox. This causes a negative pressure in the firebox and a positive pressure in the venting system as shown in Figure 4.6. The longer the vent pipe and more elbows used in the system, the greater the flow resistance. **The recommended maximum flue lengths for the P35i-C Pellet Insert are as follows:**

4" Flex Pipe:
Maximum 30 Ft. Vertical

Long runs of flex or PL vent pipe installed directly vertical from the flue stub may require more frequent cleaning due to fly ash falling off inside and collecting directly above the combustion blower outlet.
Any use of horizontal venting will require more frequent cleaning. It is the responsibility of the installer to make sure the entire flue configuration is accessible for cleaning.

4" stainless steel flex vent piping is only allowed for use in masonry fireplaces and chimneys or factory built wood burning fireplaces with class A metal chimneys. All pellet vent pipe must be secured together either by means provided by pipe manufacturer or by 3 screws at each joint.

Use only the specified venting components. Use of any other components will void the product warranty and may pose a hazard.

DO NOT INSTALL A FLUE DAMPER IN THE EXHAUST VENTING SYSTEM OF THIS APPLIANCE.

DO NOT CONNECT THIS UNIT TO A CHIMNEY FLUE SERVING ANOTHER APPLIANCE.

INSTALL VENT AT CLEARANCES SPECIFIED BY THE VENT MANUFACTURER.

C. Battery Back-up Power

Minimizing Smoke During Loss of Power Using Battery Back-up

Harman® strongly recommends installing battery back-up to minimize entry of smoke into the room in the event of power loss.

Your pellet/biomass burning appliance relies on a combustion blower to remove exhaust. A power failure will cause the combustion blower to stop. This may lead to exhaust seeping into the room. Vertical rise in the venting may provide natural draft. It is, however, no guarantee against leakage.

There are two Harman® approved battery back-up options for your appliance:

Uninterruptible Power Supply (UPS) UPS battery back-ups are available online or at computer and office equipment stores. Your Harman® appliance with Rev E or later software available beginning in November 2010 may be plugged directly into a Harman® approved UPS:

- The APC (American Power Conversion) model #BE750G and the TrippLite model INTERNET750U are tested and approved. Other brands or models may not be compatible.

When power is lost, a fully charged UPS will power a safe, combustion blower only shut-down. Your appliance will pulse the blower every few seconds to clear exhaust until the fire is out.

Note: The UPS provides safe shut-down only. It is not intended for continued operation.

Your appliance will recognize when power is restored. What happens depends on ESP temperature and whether it is equipped with automatic ignition:

- **In "Automatic" setting,** units equipped with automatic ignition will respond to the set point and ESP temperature and resume normal operation.
- **In "Manual" setting** or for units without automatic ignition:
- If the ESP is cool, the appliance will remain shut down.
- If the fire is out and the ESP is still warm, the feeder may restart. Since the fire is out, the ESP temperature will not rise. The unit will then shut-down, and may flash a six-blink status error. (See ESP error codes)
- If the fire is still burning, it will resume normal operation.

Contact your dealer if you have questions about UPS compatibility with your appliance.

⚠ CAUTION

Always keep appliance doors and hopper lid closed and latched during operation and during power failures to minimize risk of smoke or burn-back.

⚠ CAUTION

Use only Harman® approved battery back-up devices. Other products may not operate properly, can create unsafe conditions or damage your appliance.

D. Outside Air

The outside air kit consists of a Intake Stub, Stub Gasket, Outside Air intake Weldment and hardware. Figure 4.7.

An adjustable chimney intake extension, part #1-00-674104 is available to be used on masonry chimneys only. Figure 4.8.

Additional information and diagrams can be found under the "Venting Termination Design" section of the manual.

To install outside air, use kit part #1-00-774280. Follow the installation instructions provided with the kit.

100% Outside Air Kit - #1-00-774280

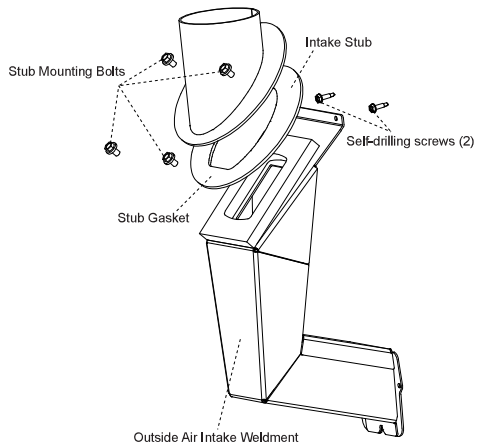

Figure 4.7

Adjustable Chimney Intake Extension Part # 1-00-674104

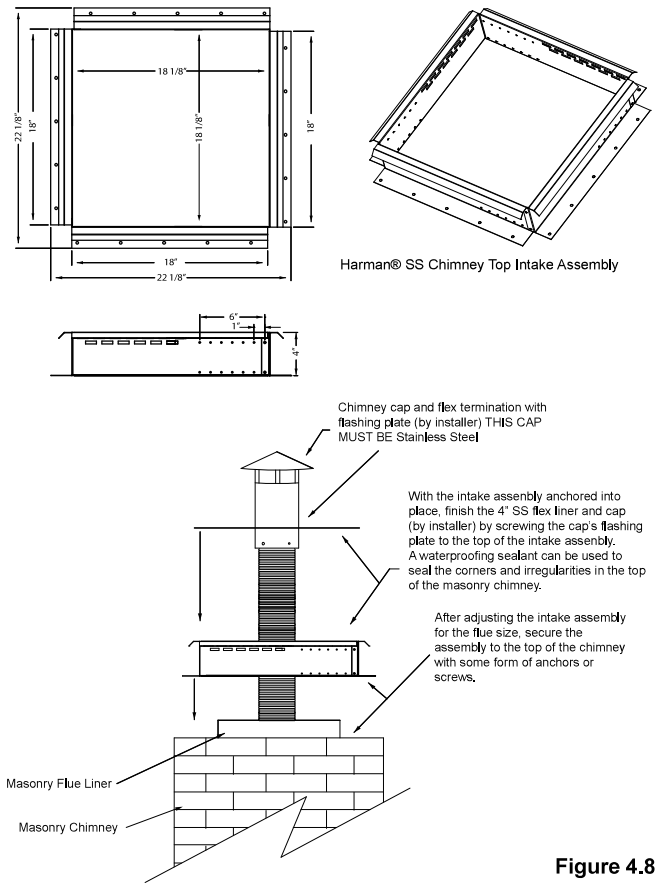

Figure 4.8

E. Locating Your Appliance & Chimney

Location of the appliance and chimney will affect performance.

- Install through the warm airspace enclosed by the building envelope. This helps to produce more draft, especially during lighting and die-down of the fire.
- Penetrate the highest part of the roof. This minimizes the effects of wind loading.
- Locate termination cap away from trees, adjacent structures, uneven roof lines and other obstructions.
- Minimize the use of chimney offsets.
- Consider the appliance location relative to floor and ceiling and attic joists.

⚠ CAUTION

- DO NOT CONNECT THIS UNIT TO A CHIMNEY FLUE SERVICING ANOTHER APPLIANCE.
- DO NOT CONNECT TO ANY AIR DISTRIBUTION DUCT OR SYSTEM.

May allow flue gases to enter the house

F. Negative Pressure

WARNING! Risk of Asphyxiation! *Negative pressure can cause spillage of combustion fumes and soot.*

Negative pressure results from the imbalance of air available for the appliance to operate properly. It can be strongest in lower levels of the house.

Causes include:

- Exhaust fans (kitchen, bath, etc.)
- Range hoods
- Combustion air requirements for furnaces, water heaters and other combustion appliances
- Clothes dryers
- Location of return-air vents to furnace or air conditioning
- Imbalances of the HVAC air handling system
- Upper level air leaks such as:
  - Recessed lighting
  - Attic hatch
  - Duct leaks

To minimize the effects of negative air pressure:

- Install the outside air kit with the intake facing prevailing winds during the heating season
- Ensure adequate outdoor air for all combustion appliances and exhaust equipment
- Ensure furnace and air conditioning return vents are not located in the immediate vicinity of the appliance
- Avoid installing the appliance near doors, walkways or small isolated spaces
- Recessed lighting should be a “sealed can” design
- Attic hatches weather stripped or sealed
- Attic mounted duct work and air handler joints and seams taped or sealed

NOTICE: *Hearth & Home Technologies assumes no responsibility for the improper performance of the chimney system caused by:*

- *Inadequate draft due to environmental conditions*
- *Down drafts*
- *Tight sealing construction of the structure*
- *Mechanical exhausting devices*

G. Avoiding Smoke and Odors

Avoiding Smoke and Odors

Negative Pressure, Shut-down, and Power Failure:

T**o reduce the probability of back-drafting or burn-back in the pellet burning appliance during power failure or shut-down conditions, the stove must be able to draft naturally** without exhaust blower operation. Negative pressure in the house will resist this natural draft if not accounted for in the pellet appliance installation.

Heat rises in the house and leaks out at upper levels. This air must be replaced with cold air from outdoors, which flows into lower levels of the house. Vents and chimneys into basements and lower levels of the house can become the conduit for air supply, and reverse under these conditions.

Outside Air:
Hearth & Home Technologies recommend attaching outside air in all installations, especially lower level and main floor locations.

Per national building codes, consideration must be given to combustion air supply to all combustion appliances. Failure to supply adequate combustion air for all appliance demands, may lead to back-drafting of those and other appliances.

When the appliance is side-wall vented: The air intake is best located on the same exterior wall as the exhaust vent outlet and located lower on the wall than the exhaust vent outlet.

When the appliance is roof vented: The air intake is best located on the exterior wall oriented towards the prevailing wind direction during the heating season.

The outside air connection will supply the demands of the pellet appliance, but consideration must be given to the total house demand. House demand may consume some air needed for the stove, especially during a power failure. It may be necessary to add additional ventilation to the space in which the pellet appliance is located. Consult with your local HVAC professional to determine the ventilation demands for your house.

Vent Configurations:

To reduce probability of reverse drafting during shut-down conditions, Hearth & Home Technologies strongly recommends:

- Installing the pellet vent with a minimum vertical run of five feet, preferably terminating above the roof line.
- Installing the outside air intake at least four feet below the vent termination.

To prevent soot damage to exterior walls of the house and to prevent re-entry of soot or ash into the house:

- Maintain specified clearances to windows, doors, and air inlets, including air conditioners.
- Vents should not be placed below ventilated soffits. Run the vent above the roof.
- Avoid venting into alcove locations.
- Vents should not terminate under overhangs, decks or onto covered porches.
- Maintain minimum clearance of 12 inches from the vent termination to the exterior wall. If you see deposits developing on the wall, you may need to extend this distance to accommodate your installation conditions.

Hearth & Home Technologies assumes no responsibility for, nor does the warranty extend to, smoke damage caused by reverse drafting of pellet appliances under shut-down or power failure conditions.

WARNING! DO NOT CONNECT THIS UNIT TO ANY AIR DISTRIBUTION DUCT OR SYSTEM.

If a rear exit flue configuration is used, with or without outside air, make sure the flue pipe termination clearances are followed as per NFPA 211.

Vent Pipe

Be sure to use approved pellet vent pipe wall and ceiling pass- through fittings to go through combustible walls and ceilings. Be sure to use a starting collar to attach the venting system to the stove. The starting collar must be secured to the flue stub with at least three screws, and sealed with high temp silicone caulking.

4” stainless steel flex vent piping is only allowed for use in masonry fireplaces and chimneys or factory built wood-burning fireplaces with class A metal chimneys.

Pellet venting pipe (also known as Type PL vent) is constructed of two layers with air space between the layers. This air space acts as an insulator and reduces the outside surface temperature to allow a clearance to combustibles of only 1 inch. The sections of pipe lock together to form an air tight seal in most cases; however, in some cases a perfect seal is not achieved. For this reason and the fact that the P35i-C Pellet Insert operates with a positive vent pressure, we specify that the joints also be sealed with silicone.

Where passing through an exterior wall or roof, be sure to use the appropriate pass-through device providing an adequate vapor barrier. Venting manufacturers generally provide these pas-through devices.

Venting Termination Requirements

1. Termination must exhaust above air inlet elevation. It is recommended that at least 60 inches (1524mm) of vertical pipe be installed when appliance is vented directly through a wall. This will create a natural draft, which will help prevent the possibility of smoke or odor venting into the home during a power outage. It will also keep exhaust from causing a nuisance or hazard by exposing people or shrubs to high temperatures. The safest and preferred venting method is to extend the vent vertically through the roof.
2. Distance from doors and operable windows, gravity or ventilation air inlets into building:
   a. Not less than 48 inches (1219mm) below;
   b. Not less than 48 inches (1219mm) horizontally from;
   c. Not less than 12 inches (305mm) above.
3. Distance from permanently closed windows:
   a. Not less than 12 inches (305mm) below, horizontally from or above.
4. Distance between bottom of termination and grade should be 12 inches (305mm) minimum. This is conditional upon plants in the area, and nature of grade surface. The grade surface must be a non-combustible material (i.e., rock, dirt). The grade surface must not be lawn. Distance between bottom of termination and public walkway should be 84 inches (2134mm) minimum.
5. Distance to combustible materials must be 24 inches (610mm) minimum. This includes adjacent buildings, fences, protruding parts of the structure, roof overhang, plants and shrubs, etc.
6. Termination Cap Location (Home Electrical Service)

- Side-to-side clearance is to be the same as minimum clearance to vinyl inside corners.
- Clearance of a termination cap below electrical service shall be the same as minimum clearance to vinyl soffits.
- Clearance of a termination cap above electrical service will be 12 inches (305mm) minimum.
- Location of the vent termination must not obstruct or interfere with access to the electrical service.

For Canada Only: This Fireplace Insert must be installed with a continuous chimney liner of 4” diameter extending from the fireplace insert to the top of the chimney. The chimney liner must conform to the Class 3 requirements of CAN/ULC-S635, Standard for Lining Systems for Existing Masonry or Factory-Built Chimneys and Vents, or CAN/ULC-S640, Standard for Lining Systems for New Masonry Chimneys.

H. Mobile Home Installation

You must use a Harman® Outside Air Kit for installation in a mobile home.

1. An outside air inlet must be provided for the combustion air and must remain clear of leaves, debris, ice and/or snow. It must be unrestricted while the appliance is in use to prevent room air starvation which causes smoke spillage. Smoke spillage can also set off smoke alarms.
2. The combustion air duct system must be made of metal. It must permit zero clearance to combustible construction and prevent material from dropping into the inlet or into the area beneath the dwelling and contain a rodent screen.
3. The appliance must be secured to the mobile home structure by bolting it to the floor (using lag bolts). Use the same holes that secured the appliance to the shipping pallet.
4. The appliance must be grounded with #8 solid copper grounding wire or equivalent, terminated at each end with an NEC approved grounding device.
5. Refer to "Clearances to Combustibles and Floor Protection" section of this manual for listings to combustibles.
6. Use silicone to create an effective vapor barrier at the location where the chimney or other component penetrates to the exterior of the structure.
7. Follow the chimney manufacturer's instructions when installing the vent system for use in a mobile home.
8. Installation shall be in accordance with the Manufacturers Home & Safety Standard (HUD) CFR 3280, Part 24.

⚠ WARNING

Asphyxiation Risk:

NEVER INSTALL INTO A SLEEPING ROOM

Consumes oxygen in the room

⚠ WARNING

Installation must comply with Manufactured Home and Safety Standard (HUD), CFR 3280, Part 24

⚠ CAUTION

THE STRUCTURAL INTEGRITY OF THE MOBILE HOME FLOOR, WALL AND CEILING/ROOF MUST BE MAINTAINED.

Do NOT cut through:

- Floor joist, wall, studs ceiling trusses.
- Any supporting material that would affect the structural integrity.

⚠ CAUTION

Never draw outside combustion air from:

- Wall, floor or ceiling cavity.
- Enclosed space such as an attic or garage.

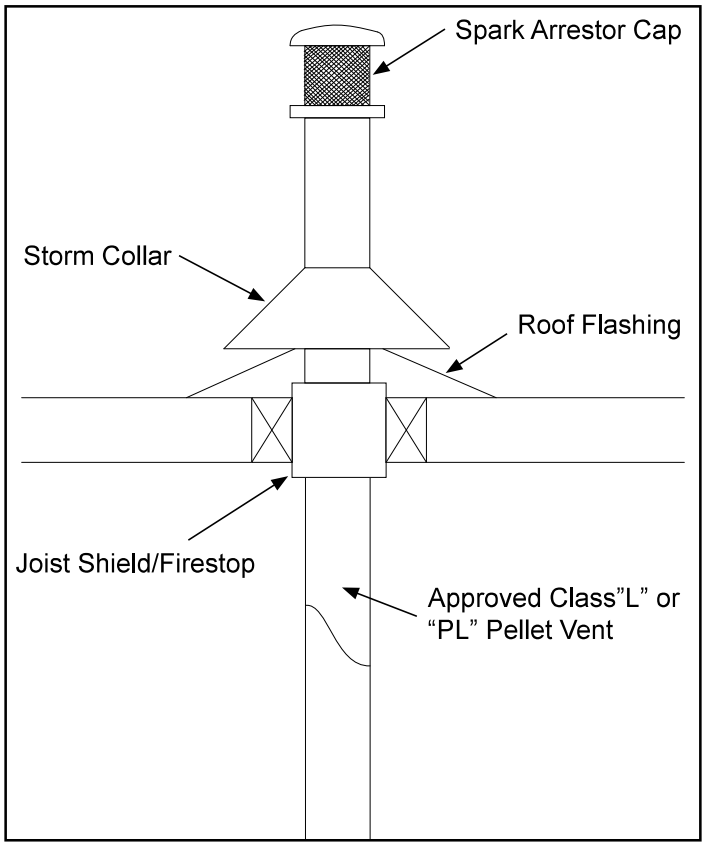

I. Fire Safety

To provide reasonable fire safety, the following should be given serious consideration:

- Install at least one smoke detector on each floor of your home.
- Locate smoke detector away from the heating appliance and close to the sleeping areas.
- Follow the smoke detector manufacturer's placement and installation instructions and maintain regularly.
- Conveniently locate a Class A fire extinguisher to contend with small fires.
- In the event of a hopper fire:
  - Evacuate the house immediately.
  - Notify fire department.

⚠ WARNING

Fire Risk.

Hearth & Home Technologies disclaims any responsibility for, and the warranty will be voided by, the following actions:

- Installation and use of any damaged appliance.
- Modification of the appliance.
- Installation other than as instructed by Hearth & Home Technologies.
- Installation and/or use of any component part not approved by Hearth & Home Technologies.
- Operating appliance without fully assembling all components.
- Do NOT Overfire.

Or any such action that may cause a fire hazard.

⚠ WARNING

THIS WOOD HEATER HAS A MANUFACTURER-SET MINIMUM LOW BURN RATE THAT MUST NOT BE ALTERED. IT IS AGAINST FEDERAL REGULATIONS TO ALTER THIS SETTING OR OTHERWISE OPERATE THIS WOOD HEATER IN A MANNER INCONSISTENT WITH OPERATING INSTRUCTIONS IN THIS MANUAL.

J. Inspect Appliance & Components

- Remove appliance and components from packaging and inspect for damage.
- Report to your dealer any parts damaged in shipment.
- **Read all the instructions before starting the installation. Follow these instructions carefully during the installation to ensure maximum safety and benefit.**

⚠ WARNING

Inspect appliance and components for damage. Damaged parts may impair safe operation.

- Do NOT install damaged components.
- Do NOT install incomplete components.
- Do NOT install substitute components.

Report damaged parts to dealer.

5 Appliance Set-Up

A. Unpacking Unit

Once the box is removed, the unit will need to be remove from the skid.

Remove the ash pan cover from unit to uncover the spring latches that hold the unit to the mounting frame, Figure 5.1.

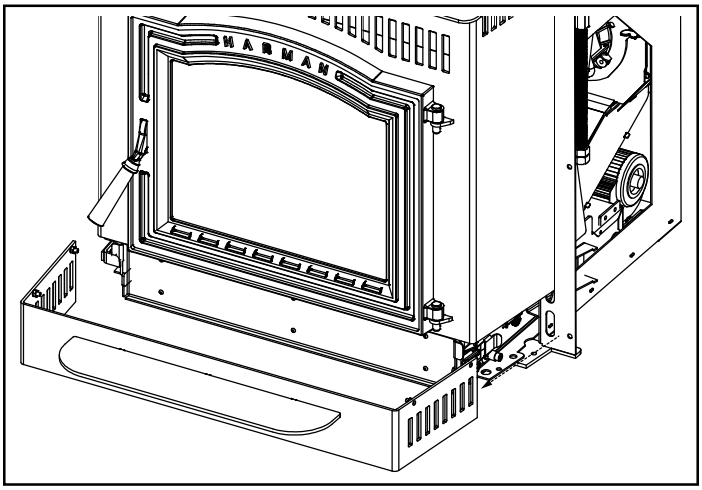

Figure 5.1 - Remove ash pan cover.

Unlatch the spring latch located on both the right and left hand side to release the unit from the mounting frame, Figure 5.2.

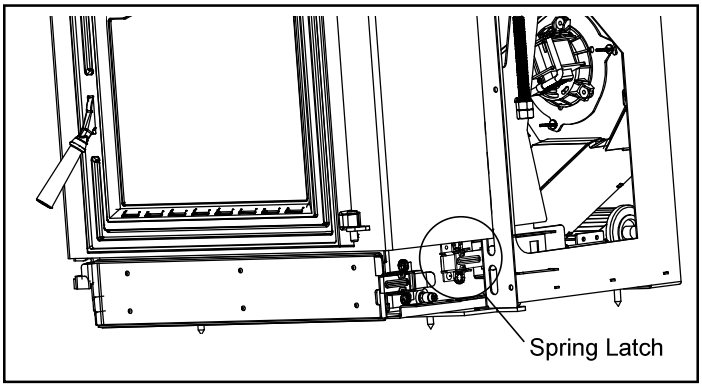

Figure 5.2 - Unlatch spring latch.

Once spring latches are unlatched and pulled away from the frame, firmly grab the stove and pull it toward you and out away from the frame. Set unit to the side, Figure 5.3. **Note: This may take 2 people to achieve.**

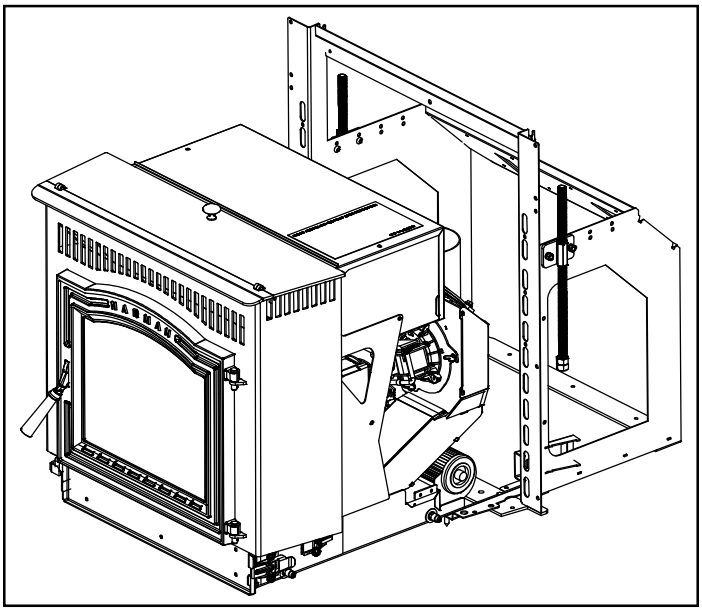

Figure 5.3 - Pull unit away from the mounting frame.

Now that the unit is removed you can now remove the mounting frame from the skid. To do this simply remove (4) 5/16-18 Hex head bolts. Figure 5.4.

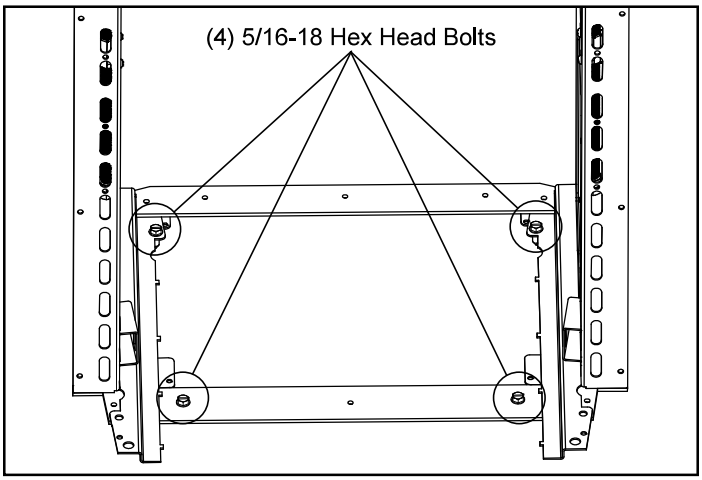

Figure 5.4 - Remove (4) 5/16-18 Hex Head Bolts

Now that the mounting frame is removed from the skid you can now install the surround panels. **Note:** Installation instructions for the surround are located inside the box with the surround panels.

B. Control Board Installation

The control board is packaged in a static resistant bag. Use care when handling, hold the control board only by the edges.

Using (4) #10 sheet metal screws located in the hardware pack, install the control door hinge and control board assembly to the left side wing surround, Figure 5.5.

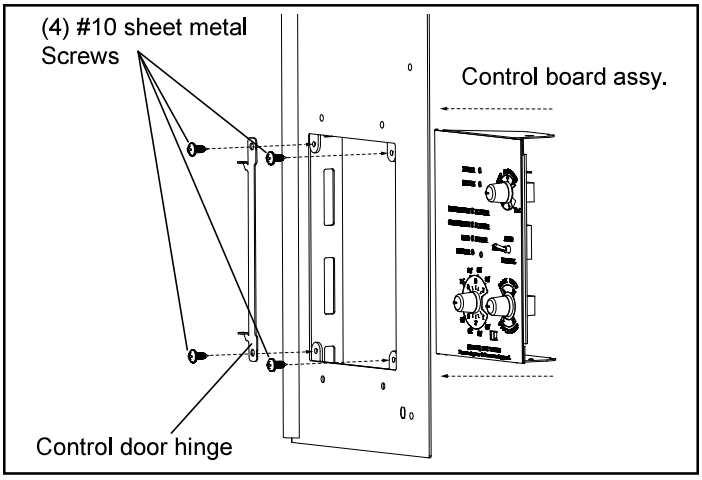

Figure 5.5 - Install control board assembly.

C. Securing the Mounting Frame

The mounting frame is the anchor for the appliance. If the frame is not secured properly, shifting will occur when sliding the insert in or out.

The stove is supplied with (4) 5/16-18 Hex Head bolts located in the hardware pack for leg levelers. These bolts should be threaded down through the holes to raise the frame corners as needed to make the frame level as needed, Figure 5.6.

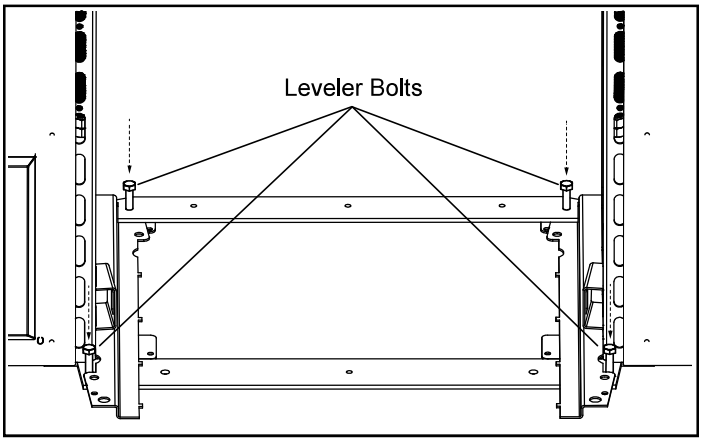

Figure 5.6

Install the coupler nut weldments to the frame in the hole location that suits your needs with the (4) 1/4-20 x 5/8 flange screws and nuts and 1/2" jack bolts. Install the mounting frame into the opening and adjust these bolts to insure the frame is level, Figure 5.7.

Note: The use of all 4 leveling bolts may not be necessary. Tighten the 1/2" jack bolts against the lintel.

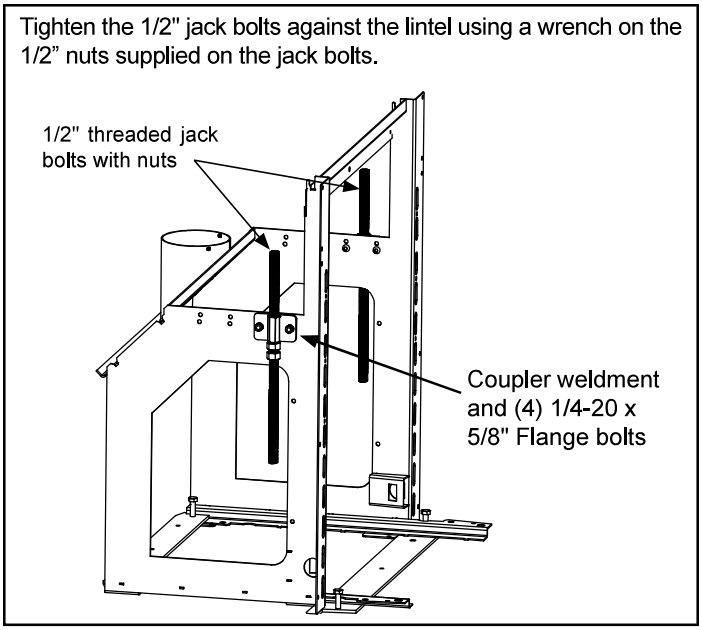

Figure 5.7 - Install jack bolts

D. Routing the Power Cord

When choosing an electrical supply outlet, be sure the polarity is correct, and that the supplied voltage is within the range of 117 to 123 Volts. Surge protection is also recommended to protect the control board software in the event of a surge or spike.

Once the outlet location is decided, you'll need to install and route the power cord.

Remove the power cord from the ash pan.

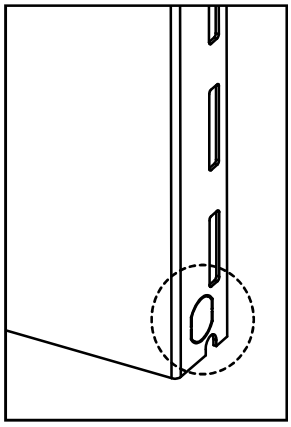

At the bottom of each of the side surround panels is a knockout for the cord retainer. Remove the appropriate knockout and feed the loose wire end of the power cord into the hole. If your cord needs to exit from the right side, route the cord up the side and over the top of the mounting frame and back down the left side. Use the two hooks on the top corners of the mounting frame to secure the cord. Attach a star washer, the ground wire ring terminal, a second star washer, the ring terminal from the ground wire jumper to the bottom stud of the left surround panel. Using a pliers, compress the cord clamp and push it into the hole.

⚠ WARNING

ROUTE POWER CORD AWAY FROM THE APPLIANCE. DO NOT RUN THE CORD UNDER OR IN FRONT OF THE APPLIANCE.

Connecting Wiring Harness

In a large fireplace opening, you may have plenty of space for the control board to remain attached. For a smaller fireplace opening, you'll likely need to remove the control board to route it through the side of the mounting frame and out through the control opening.

Follow these steps;

- Feed the harness wires and the ESP wire through the opening in the mounting frame and out through the control opening in the surround panel.
- Holding the control board outside the opening in the surround panel, re-attach the harness plug and the ESP wire.
- After determining the location of the Room Sensor (See next Section), Attach it to the two male spade terminals near the top of the control board.

NOTE: These connections are not polarity specific.

- From the power cord, attach the green ground wire to the grounding post located on the feeder air intake snout.
- The black wire from the power cord gets attached to the short brown wire from the control harness
- The white wire from the power cord will attach to the short white wire on the control harness.
- Install the control panel into the surround; Right side first, then tilt in the left side.
- Secure using the four black machine screws included with the surround.

E. Installing the Venting

The flue collar on the rear of the mounting frame is designed to pivot. Loosen the four mounting bolts and adjust the angle of the collar as needed, Figure 5.10.

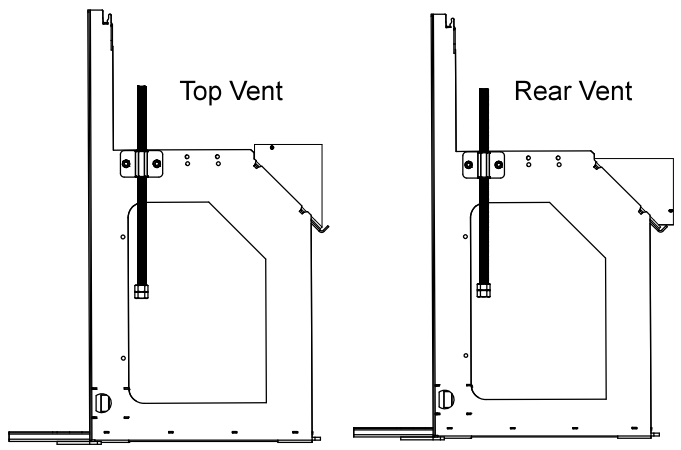

Note: When installed in a rear vent configuration, the maximum BTU may be reduced due to elevated ESP temperatures associated with the horizontal exhaust stream.

Figure 5.10

F. Installing the Body into the Mounting Frame

Attach the female terminal of the ground jumper wire to the ground tab located next to the air intake, Figure 5.11.

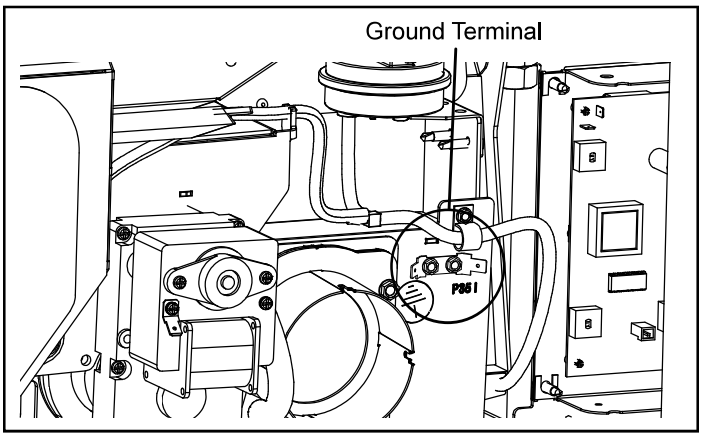

Figure 5.11

The rollers on either side of the insert body will ride on the rails of the mounting frame. Once the body is all the way in, hook and close the spring latches located on each side of the unit to secure the stove body to frame, Figure 5.12.

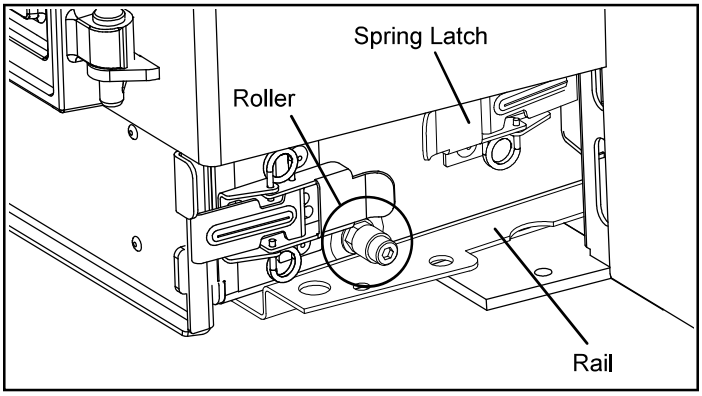

Figure 5.12

G. Room Sensor Installation

Although not required, it is recommended that the room sensor be connected in every installation. Using a minimum size 18 gauge wire, you may splice in an additional length, to extend the room sensor. The following are typical locations for the room sensor;

- On an interior wall next to or in place of a typical wall thermostat.
- On the leg of a coffee table or end table in your favorite sitting location.
- Sticking out through the punched hole at the lower right corner of the control panel.

Note: When installing the room sensor externally, limit the distance from the stove to 25 feet or less.

Once the location has been decided, run the wiring to the control panel. You'll need to remove the two terminals from the end of the sensor cable and replace them with the two smaller terminals from the hardware bag. Plug the terminals into the control board. These connections are not polarity specific.

Note: If the room sensor is located too close to the appliance, or in a direct path of the distribution air, You may need to elevate the temperature setting to maintain a comfortable temperature level throughout the heated space.

See Section "E. Draft Test Procedure" under Operating Instructions.

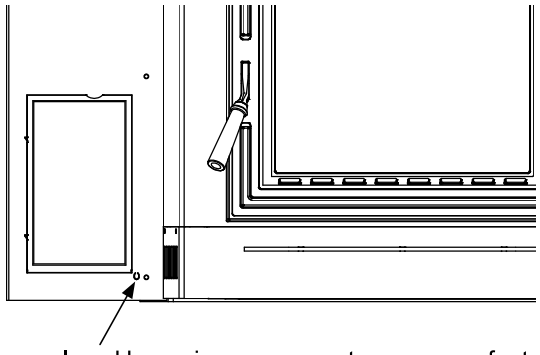

Room sensor placed here gives an accurate measure of return air. Push the pre-cut hole inward, and feed the sensor from the back side. Allow the bulb of the sensor to extend approximately 1-1/2" into the room. Use a wire tie on the push-in tab to secure the sensor wire.

Figure 5.13

H. Flame Guide Extension

Once the flame guide is installed the Flame Guide Extension should be installed by sliding it in behind the flame guide as shown below. Notice the bend points away from the Heat Exchanger.

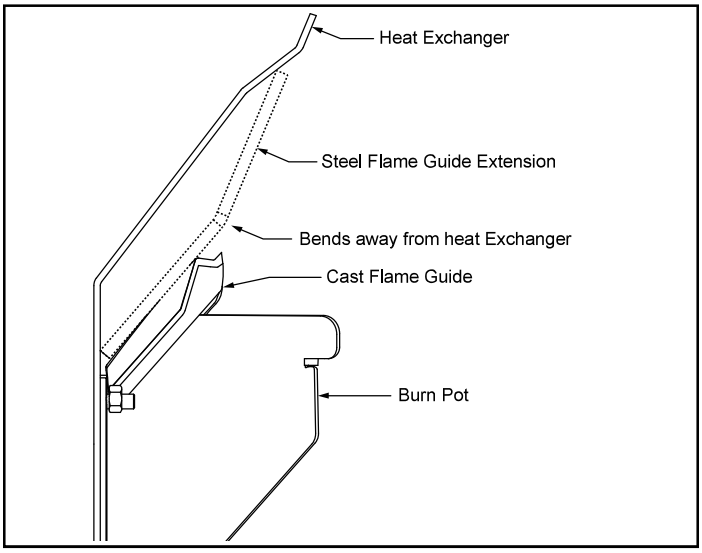

Figure 5.14

After the installation is completed, but before the first fire is lit, check and record the high and low draft readings.

⚠ CAUTION

- DO NOT CONNECT THIS UNIT TO A CHIMNEY FLUE SERVICING ANOTHER APPLIANCE.
- DO NOT CONNECT TO ANY AIR DISTRIBUTION DUCT OR SYSTEM.

May allow flue gases to enter the house

I. Firebox Draft and Combustion Fan RPM

These units are pre-tested at the factory with exactly 120 VAC, 60 Hz. They are checked and adjusted for firebox tightness, gasket leakage, motor operation and igniter operation. The P35i-C is then factory set at a mid-point adjustment and in most cases will not need any adjustments.

Check and record the firebox draft before installing venting and after venting is installed ***(before starting fire)***.

There is a silicone draft meter port located behind the ash pan cover on the left hand side of the unit above the spring latch. Install the magnahelic meter *(capable of at least .5" of water column)* Figure 5.15.

Considerations for successful draft include:

- Negative pressure in the firebox
- Location of appliance and chimney

To measure the draft or negative pressure on your appliance use a magnahelic or a digital pressure gauge capable of reading 0 - 1 inches of water column (W.C.).

The appliance should be running on high for at least 15 minutes for the test.

With the stove running on high you should have a negative pressure equal to or greater than the number given in the chart below. If you have a lower reading than you find on the chart, your appliance does not have adequate draft to burn the fuel properly.

Plug unit into a 120 VAC, 60 Hz outlet.

Go to the "Home Screen", the power icon should be gray. Press menu, on the first menu press "test".

The test screen has 4 component test modes. The second icon is for the combustion fan test.

One press of the icon turns the combustion fan to full line voltage. **(Note: During this test , the combustion fan will not achieve its top RPM of 3200 due to the density of the ambient air.)** All RPM displays could vary +/- 50 from that of the set RPM's. Allow several minutes for the fan motor to warm up.

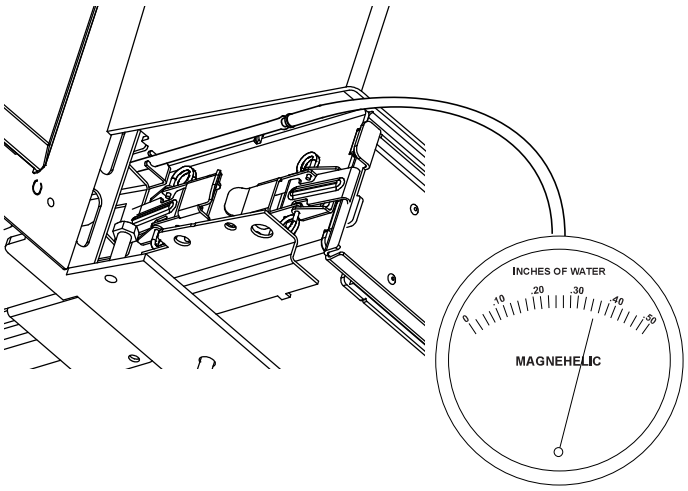

Silicone Draft Meter Port
The Draft Test Port can be accessed behind the ash pan cover on the left hand side of the unit above the spring latch.

Figure 5.15

Press the icon a second time, the combustion fan will go to "Maximum" (as set in the ***Authorized Dealer Only*** area under the combustion fan icon)

The "Maximum" is factory set at 2900 RPM. Allow the RPM to stabilize and record the firebox draft Maximum.

Before Install: _____ IWC
After Install: _____ IWC

(Firebox Draft and Combustion Fan RPM Cont.)

Press the icon a third time, the combustion fan will go to "Minimum" (as set in the ***Authorized Dealer Only*** area under the combustion fan icon) allow the RPM to stabilize and record the firebox draft minimum.

Before Install: _____ IWC
After Install: _____ IWC

Cold Stove Draft:

2500 RPM Low -.20 and -.25
2900 RPM High -.45 and -.50

Leaving the test screen will end any tests in progress and goes back to whatever mode of operation it was set to on the home screen.

If the unit is not adjusted properly, it does not cause a safety concern. If the unit is adjusted too high, only efficiency is lost. If the unit is adjusted too low, the low draft pressure switch will not allow the feed motor or the igniter to operate.

6 Reference Material

A. Safety Reminders

When installing the Harman® P35i-C Pellet Insert, respect basic safety standards. Read these instructions carefully before you attempt to install or operate the P35i-C Pellet Insert. Failure to do so may result in damage to property or personal injury and may void the product warranty.

Consult with your local building code agency and insurance representative before you begin your installation to ensure compliance with local codes, including the need for permits and follow-up inspections.

CAUTION

This appliance must be vented to the outside.

Due to high temperatures, this stove should be placed out of traffic and away from furniture and draperies.

Children and adults should be alerted to the hazards of high surface temperatures and should stay away to avoid burn to skin and/or clothing.

Young children should be carefully supervised when they are in the same room as the stove.

Clothing and other flammable materials should not be placed on or near this stove.

Installation and repair of this stove should be done by a qualified service person. The appliance should be inspected before use and at least annually by a qualified service person. More frequent cleaning will be required. It is imperative that control compartments, burners, and circulating air passageways of this stove be kept clean.

WARNING

MOBILE/MANUFACTURED HOME GUIDELINES DO NOT ALLOW INSTALLATION IN A SLEEPING ROOM.

CAUTION

THE STRUCTURAL INTEGRITY OF THE MOBILE HOME FLOOR, WALL, AND CEILING/ROOF MUST BE MAINTAINED.

CAUTION

THE STOVE IS HOT WHILE IN OPERATION.

KEEP CHILDREN, CLOTHING AND FURNITURE AWAY. CONTACT MAY CAUSE SKIN BURNS.

WARNING

KEEP COMBUSTIBLE MATERIALS SUCH AS GRASS, LEAVES, ETC. AT LEAST 3 FEET AWAY FROM THE POINT DIRECTLY UNDER THE VENT TERMINATION.

WARNING

USE OF IMPROPER FUELS, FIRE STARTERS OR ALTERING THE STOVE FOR HIGHER HEAT OUTPUT MAY CAUSE DAMAGE TO THE STOVE AND COULD RESULT IN A HOUSE FIRE. USE ONLY APPROVED FUELS AND OPERATION GUIDELINES

CAUTION

DO NOT USE MAKESHIFT COMPONENTS OR OTHER COMPROMISES WHEN INSTALLING THIS APPLIANCE.

B. Wiring Diagram

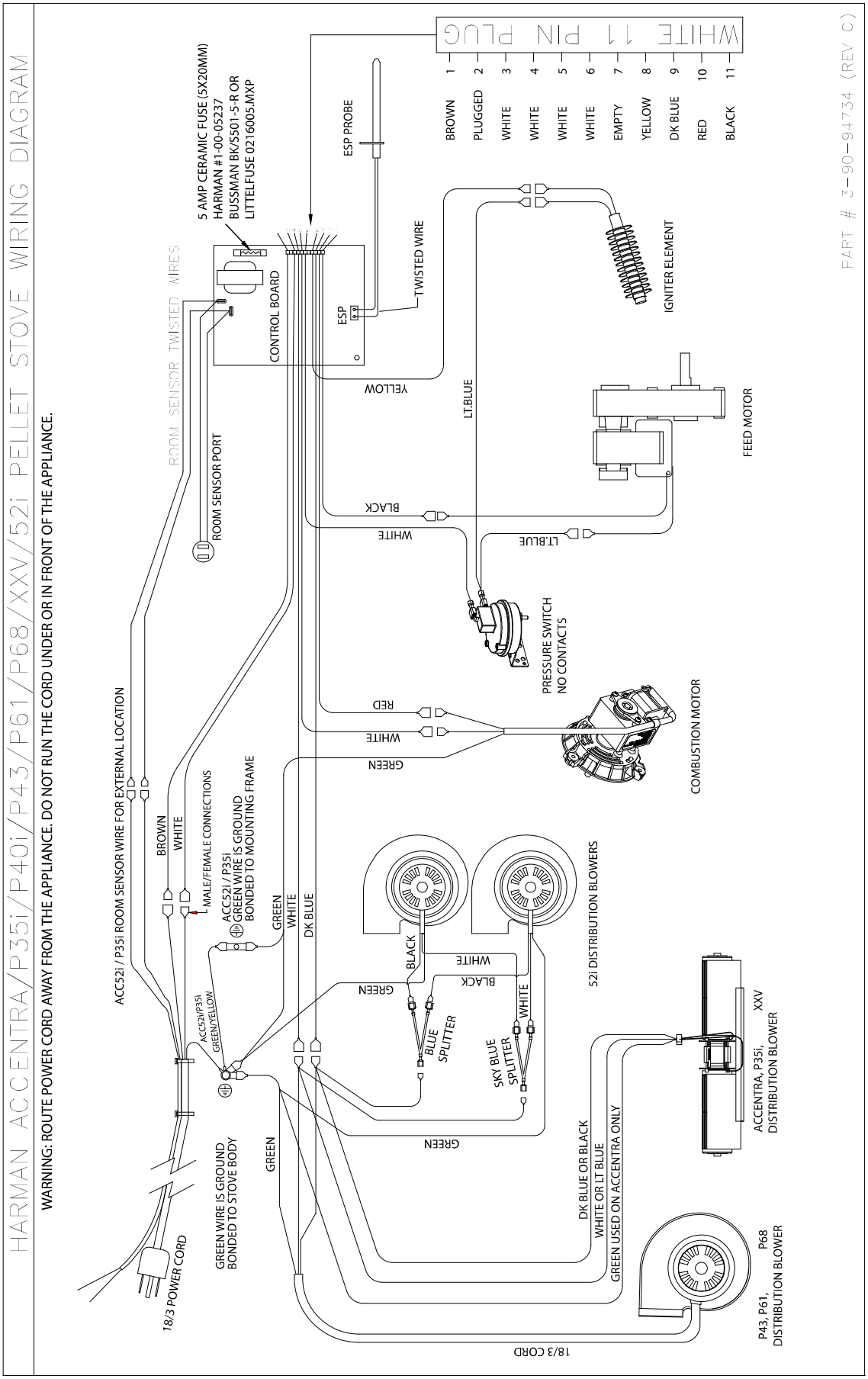

HARMAN®

352 Mountain House Road, Halifax, PA 17032
www.harmanstoves.com

Please contact your Harman® dealer with any questions or concerns.
For the location of your nearest Harman® dealer,
please visit www.harmanstoves.com.

Printed in U.S.A

Established 1974

QUALITY CONTROL SERVICES

LABORATORY EQUIPMENT • SALES • SERVICE • CALIBRATION • REPAIRS
2340 SE 11TH Ave. Portland, Oregon 97214 • Box 14831 Portland, Oregon 97293
(503) 236-2712 • FAX (503) 235-2535 • www.qc-services.com

ACCREDITED
CERTIFICATE #1550.01

PFS Teco
11785 SE Hwy 212 STE#305
Clackamas, OR 97015

Report Number: DIRI01A05026181218

A2LA ACCREDITED
CERTIFICATE OF CALIBRATION WITH DATA

INSTRUMENT INFORMATION

Item	Make	Model	Serial Number	Customer ID	Location
Scale	Rice Lake	IQ+355E-2A x 100(	A05026	#041	Lab
Units	**Readability**	**SOP**	**Cal Date**	**Last Cal Date**	**Cal Due Date**
lbs	0.1	QC033	12/18/18	6/13/18	12/2019

FUNCTIONAL CHECKS

SHIFT TEST	LINEARITY	REPEATABILITY	ENVIRONMENTAL CONDITIONS
Test Wt: 250 Tol: 1	Test Wt: HB44 Tol: HB44	Test Wt: 100 Tol: 1	☐ Good ☑ Fair ☐ Poor
As-Found: Pass:☑ Fail:☐	As-Found: Pass:☑ Fail:☐	As-Found: Pass:☑ Fail:☐	Temperature: 16.9°C
As-Left: Pass:☑ Fail:☐	As-Left: Pass:☑ Fail:☐	As-Left: Pass:☑ Fail:☐	

CALIBRATION DATA

Standard	As-Found	As-Left	Expanded Uncertainty
1000	999.3	1000.2	0.12
700	699.7	700.1	0.12
500	499.7	500.1	0.08
300	299.8	300.1	0.08
100	99.9	100.0	0.05
50	50.0	50.0	0.05

CALIBRATION STANDARDS

Item	Make	Model	Serial Number	Cal Date	Cal Due Date	NIST ID
Avoirdupois Cast W	Rice Lake	25 and 50lb	PWO990-CA	11/24/17	11/2019	20172265

Permanent Information Concerning this Equipment:
12 month calibration cycle. 2000lb platform.

Comments/Information Concerning this Calibration
12/18 - RH = 67%. Adjusted span.

Report prepared/reviewed by: ServiceTechDC **Date:** 12/28/18 **Technician:** R.Kauble
Signature:

THIS CERTIFICATE SHALL NOT BE REPRODUCED, EXCEPT IN FULL, WITHOUT THE APPROVAL OF QUALITY CONTROL SERVICES, INC.

The uncertainty is calculated according to the ISO Guide to the Expression of Uncertainty in Measurement and includes the uncertainty of standards used combined with the observed standard deviation of the unit under test. The uncertainty is expanded with a k factor of 2 for an approximate 95% level of confidence. Instruments listed above were calibrated using standards traceable to the National Institute of Standards and Technology (NIST). Calibration data reflect results at the time and location of calibration. Calibration data should be reviewed to insure that the instrument is performing to its required accuracy.

Dry Gas Meter Calibration

Meter Manufacturer:	Apex
Model:	XC-60-ED
Lab ID #:	53
Serial #:	1902130
Calibration Date:	6/14/2019
Calibration Expiration:	12/14/2019
Barometric Pressure:	29.97 in. Hg

Reference Standard DGM	
Manufacturer:	Apex
Model:	SK25DA
Lab ID#:	47
Serial #:	1101001
Calibration Expiration Date:	3/13/2020
Calibration γ Factor:	0.998

Unit Under Test Previous Calibration	
Date	12/17/2018
γ Factor:	1.004
Allowable Deviation (±5%):	0.0502
Actual Deviation:	0.01
Result:	PASS

Calibration Data	Run 1	Run 2	Run 3
Standard DGM Initial Volume (L)	0.000	0.000	0.000
Standard DGM Final Volume (L)	147.373	142.005	143.359
Standard DGM Temperature (°F)	71.0	72.0	72.0
Standard DGM Pressure (in H_2O)	0.00	0.00	0.0
DGM Initial Volume (ft^3)	0.000	0.000	0.000
DGM Final Volume (ft^3)	5.227	5.114	5.224
DGM Temperature (°F)	78.0	85.0	91.0
DGM Pressure (in H_2O)	2.67	2.00	1.5
Time (min)	33.0	36.0	42.0
Net Volume for Standard DGM (ft^3)	5.204	5.015	5.063
Net Volume for DGM (ft^3)	5.227	5.114	5.224

Dry Gas Meter γ Factor	1.000	0.998	0.998
γ Factor Deviation From Average	1.000	0.998	0.998

Average Gas Meter γ Factor: 0.999

Calculations:

1. Deviation = |Average value for all runs - current run value|
2. $\gamma = [V_{std} \times (\gamma_{Std}) \times (P_{bar}+P_{std}/13.6) \times (T_{DGM} + 460)] / [V_{DGM} \times (T_{std} + 460) \times (P_{bar} + P_{DGM}/ 13.6)]$

Standard Reference Meter is calibrated to NIST traceable standards. Uncertainty of measurement is ±0.5%.

 Technician:

Dry Gas Meter Calibration

Meter Manufacturer:	Apex
Model:	XC-60-ED
Lab ID #:	54
Serial #:	1902133
Calibration Date:	6/14/2019
Calibration Expiration:	12/14/2019
Barometric Pressure:	29.97 in. Hg

Reference Standard DGM	
Manufacturer:	Apex
Model:	SK25DA
Lab ID#:	47
Serial #:	1101001
Calibration Expiration Date:	3/13/2020
Calibration γ Factor:	0.998

Unit Under Test Previous Calibration	
Date	12/17/2018
γ Factor:	1.000
Allowable Deviation (±5%):	0.05
Actual Deviation:	0.00
Result:	PASS

Calibration Data	Run 1	Run 2	Run 3
Standard DGM Initial Volume (L)	0.000	0.000	0.000
Standard DGM Final Volume (L)	139.967	143.359	139.656
Standard DGM Temperature (°F)	72.0	73.0	75.0
Standard DGM Pressure (in H_2O)	0.00	0.00	0.0
DGM Initial Volume (ft^3)	0.000	0.000	0.000
DGM Final Volume (ft^3)	5.098	5.242	5.114
DGM Temperature (°F)	92.0	93.0	95.0
DGM Pressure (in H_2O)	2.99	2.02	1.3
Time (min)	30.0	37.0	45.0
Net Volume for Standard DGM (ft^3)	4.943	5.063	4.932
Net Volume for DGM (ft^3)	5.098	5.242	5.114

Dry Gas Meter γ Factor	0.997	0.995	0.995
γ Factor Deviation From Average	0.997	0.995	0.995

Average Gas Meter γ Factor: 0.996

Calculations:

1. Deviation = |Average value for all runs - current run value|
2. $\gamma = [V_{std} \times (\gamma_{Std}) \times (P_{bar}+P_{std}/13.6) \times (T_{DGM} + 460)] / [V_{DGM} \times (T_{std} + 460) \times (P_{bar} + P_{DGM}/ 13.6)]$

Standard Reference Meter is calibrated to NIST traceable standards. Uncertainty of measurement is ±0.5%.

 Technician:

Established 1974

QUALITY CONTROL SERVICES

LABORATORY EQUIPMENT • SALES • SERVICE • CALIBRATION • REPAIRS
2340 SE 11TH Ave. Portland, Oregon 97214 • Box 14831 Portland, Oregon 97293
(503) 236-2712 • FAX (503) 235-2535 • www.qc-services.com

ACCREDITED
Calibration Services
Certificate Number: 1550.01
Laboratory code: 115953

Report of Calibration

Firm: Dirigo Laboratories
Address: 11785 SE Hwy 212, Ste 305
City/State/Zip: Clackamas, OR 97015

Test Completed: 03/21/17
Submitted By: John Steiner
Traceable Number: 20170468

Test Item: 200mg and 100mg Individual Weights
Serial No.: Listed in Table

Manufacturer: Troemner

Material	Assumed Density	Range	Tolerance Class
Stainless Steel	7.95 g/cm^3	200mg & 100mg	ASTM Class 1

Method and Traceability
The procedure used for this calibration is NIST IR 6969 SOP 4 Double Substitution Weighing Design. Standards used for comparison are traceable to the National Institute of Standards and Technology (reports on file) and are part of a comprehensive measurement assurance program for ensuring continued accuracy and traceability within the level of uncertainty reported. The Traceable Number listed above is Traceable to National Standards through an unbroken chain of comparison each having stated uncertainties.

Standards Used:
100g to 1mg Working Standards Were Calibrated: 03/03/17 Due: 03/31/18 Standards ID: 723318
Mass Comparators Used: MET-05 **Tested by:** D. Thompson

Conventional Mass: "The conventional value of the result of weighing a body in air is equal to the mass of a standard, of conventionally chosen density, at a conventionally chosen temperature, which balances this body at this reference temperature in air of conventionally chosen density. International Recommendation 33 (OIML IR 33 1973, 1979). "Conventional Value of the Result of Weighing in Air" **(Previously known as "Apparent Mass vs. 8.0g/cm^3).**

Uncertainty Statement: The uncertainty conforms to the ISO Guide to the Expressions of Uncertainty in Measurement. Uncertainty as reported is based on a coverage factor k=2 for an approximate 95 percent level of uncertainty. Uncertainty components include the standard deviation of the process, the uncertainty of the standard used, an uncertainty component associated with the potential drift of the standard used, and the estimated uncertainty related to measuring and determining the air buoyancy effect.

Conventional Mass Values are listed on page 2 of this report.

Quality Control Services, Inc.
Metrology Laboratory Manager
E-mail dthompson@qc-services.com

Date: 03/21/17

Signature David S. Thompson

This document shall not be reproduced, except in full, without the written approval of Quality Control Services Mass Laboratory.

Member: National Conference of Standards Laboratories and Weights & Measures

Established 1974

QUALITY CONTROL SERVICES

LABORATORY EQUIPMENT • SALES • SERVICE • CALIBRATION • REPAIRS
2340 SE 11TH Ave. Portland, Oregon 97214 • Box 14831 Portland, Oregon 97293
(503) 236-2712 • FAX (503) 235-2535 • www.qc-services.com

ACCREDITED
Calibration Services
Certificate Number: 1550.01
Laboratory code: 115953

Report of Calibration

Firm: Dirigo Laboratories
Address: 11785 SE Hwy 212, Ste 305
City/State/Zip: Clackamas, OR 97015

Test Completed: 03/21/17
Submitted By: John Steiner
Traceable Number: 20170468

Test Item: 200mg and 100mg Individual Weights
Serial No.: Listed in Table

Manufacturer: Troemner

Laboratory Environment at time of test

Temperature °C	Pressure mmHg	Humidity %RH
21.967	753.44	49.44

Conventional Mass Value

Nominal Value	As Found grams	As Found Correction* (mg)	Uncertainty (mg)	Tolerance (mg)
200mg SN 1000101395	0.2000061	0.0061	0.0026	0.01
100mg SN 1000126267	0.1000046	0.0046	0.0028	0.01

*Correction is the difference between the conventional mass value of a weight and its nominal value.

Comments: These weights were new from the manufacturer and were within ASTM Class 1 tolerances As Found. No adjustments or changes were made so As Found values should be considered to be As Left values.

Accredited by the American Association for Laboratory Accreditation (A2LA) under Calibration Laboratory Code 115953 and Certificate Number 1550.01. This laboratory meets the requirements of ISO/IEC 17025:2005 *General Requirements for the Competence of Testing and Calibration Laboratories.* This laboratory also meets the requirements of ANSI/NCSL Z540-1-1994 and any additional program requirements in the field of calibration.

Quality Control Services, Inc.
Metrology Laboratory Manager
E-mail dthompson@qc-services.com

Date: 03/21/17

Signature David S. Thompson

This document shall not be reproduced, except in full, without the written approval of Quality Control Services Mass Laboratory.
Member: National Conference of Standards Laboratories and Weights & Measures

Established 1974

QUALITY CONTROL SERVICES

LABORATORY EQUIPMENT • SALES • SERVICE • CALIBRATION • REPAIRS
2340 SE 11TH Ave. Portland, Oregon 97214 • Box 14831 Portland, Oregon 97293
(503) 236-2712 • FAX (503) 235-2535 • www.qc-services.com

ACCREDITED
Calibration Services
Certificate Number: 1550.01
Laboratory code: 115953

Report of Calibration

Firm: Dirigo Laboratories
Address: 11785 SE Hwy 212, Ste 305
City/State/Zip: Clackamas, OR 97015

Test Completed: 01/15/16
Purchase Order: 1001
Traceable Number: 20152489

Test Item: 20lb and 10lb Individual Grip Handle Weights
Serial No.: Listed in Table

Manufacturer: Unknown

Laboratory Environment at time of test

Temperature °C	Pressure mmHg	Humidity %RH
21.448	760.64	44.58

Conventional Mass Value

Nominal Value	As Found pounds	As Found Correction* (mg)	Uncertainty (mg)	Tolerance (mg)
20lb #098	19.9995450	-206.4	6.4	910
10lb #097	10.0006510	295.3	5.1	450
10lb #051	10.0003421	155.2	5.1	450

*Correction is the difference between the conventional mass value of a weight and its nominal value.

Comments: These weights were received in good condition and were within NIST Handbook 105-1 Class F tolerances As Found. No adjustments or changes were made so As Found values should be considered to be As Left values.

Accredited by the American Association for Laboratory Accreditation (A2LA) under Calibration Laboratory Code 115953 and Certificate Number 1550.01. This laboratory meets the requirements of ISO/IEC 17025:2005 *General Requirements for the Competence of Testing and Calibration Laboratories*. This laboratory also meets the requirements of ANSI/NCSL Z540-1-1994 and any additional program requirements in the field of calibration.

Quality Control Services, Inc.
Metrology Laboratory Manager
E-mail dthompson@qc-services.com

Date: 01/15/16

Signature David S. Thompson

This document shall not be reproduced, except in full, without the written approval of Quality Control Services Mass Laboratory.
Member: National Conference of Standards Laboratories and Weights & Measures

Established 1974

QUALITY CONTROL SERVICES

LABORATORY EQUIPMENT • SALES • SERVICE • CALIBRATION • REPAIRS
2340 SE 11TH Ave. Portland, Oregon 97214 • Box 14831 Portland, Oregon 97293
(503) 236-2712 • FAX (503) 235-2535 • www.qc-services.com

ACCREDITED
CERTIFICATE #1550.01

PFS Teco
11785 SE Hwy 212 STE#305
Clackamas, OR 97015

Report Number: DIRI0134307497181218

A2LA ACCREDITED
CERTIFICATE OF CALIBRATION WITH DATA

INSTRUMENT INFORMATION

Item	Make	Model	Serial Number	Customer ID	Location
Balance	Sartorius	ENTRIS224-1S	34307497	#107	Lab
Units	**Readability**	**SOP**	**Cal Date**	**Last Cal Date**	**Cal Due Date**
g	0.0001	QC012	12/18/18	6/13/18	12/2019

FUNCTIONAL CHECKS

ECCENTRICITY	LINEARITY	STANDARD DEVIATION	ENVIRONMENTAL CONDITIONS
Test Wt: 100 Tol: 0.0003	Test Wt: 50 x 4 Tol: 0.0002	Test Wt: 100 Tol: 0.0001	☐ Good ☑ Fair ☐ Poor
As-Found: Pass: ☑ Fail: ☐	As-Found: Pass: ☑ Fail: ☐	1. 100.0001 5. 100.0002 9. 100.0001	Temperature: 21.3°C
As-Left: Pass: ☑ Fail: ☐	As-Left: Pass: ☑ Fail: ☐	2. 100.0001 6. 100.0001 10. 100.0001	
		3. 100.0001 7. 100.0001 Result	
		4. 100.0001 8. 100.0002 0.00004	

A2LA ACCREDITED SECTION OF REPORT

Standard	As-Found	As-Left	Expanded Uncertainty
200	200.0002	200.0001	0.00014
100	100.0001	100.0001	0.00014
50	50.0003	50.0001	0.00014
20	20.0001	20.0001	0.00014
1	1.0001	1.0000	0.00014
0.1	0.1000	0.1000	0.00014

CALIBRATION STANDARDS

Item	Make	Model	Serial Number	Cal Date	Cal Due Date	NIST ID
Weight Set	R.L./Troemner	10kg to 1mg	G782	1/3/18	1/2019	20172421

Permanent Information Concerning this Equipment:
12 month calibration cycle.

Comments/Info Concerning this Calibration:
12/18 - RH = 56%. Adjusted span.

Report prepared/reviewed by: ServiceTech JC **Date:** 12/28/18 **Technician:** R.Kauble
Signature:

THIS CERTIFICATE SHALL NOT BE REPRODUCED WITHOUT THE APPROVAL OF QUALITY CONTROL SERVICES, INC.

The uncertainty is calculated according to the ISO Guide to the Expression of Uncertainty in Measurement and includes the uncertainty of standards used combined with the observed standard deviation and readability of the unit under test. The uncertainty is expanded with a k factor of 2 for an approximate 95% level of confidence. Instruments listed above were calibrated using standards traceable to the National Institute of Standards and Technology (NIST). Calibration data reflect results at the time and location of calibration. Calibration data should be reviewed to insure that the instrument is performing to its required accuracy. Calibrations comply with ISO/IEC 17025 and ANSI/Z540-1-1994 quality standards.

DICK MUNNS COMPANY
LIQUID & GAS FLOW CALIBRATION

ISO 17025 IAS ACCREDITED

CL-122

CERTIFICATE OF CALIBRATION

CUSTOMER:	**PFS-TECO :** CLACKAMAS, OR	**CALIBRATION DATE:**	03/14/2019
PO NUMBER:	N/A	**CALIBRATION DUE:**	03/14/2020
INST. MANUFACTURER:	DWYER	**PROCEDURE:**	T.O.33K6-4-1769-1
INST. DESCRIPTION:	VELOMETER	**CALIBRATION FLUID:**	AIR @ 14.7 PSIA 70°F
MODEL NUMBER:	471	**RECEIVED CONDITION:**	WITHIN MFG. SPECS.
SERIAL NUMBER:	CP288559 (ID# 095)	**LEFT CONDITION:**	WITHIN MFG. SPECS.
RATED UNCERTAINTY:	SEE NOTES BELOW.	**AMBIENT CONDITIONS:**	762 mm HGA 43% RH 69°F
UNCERTAINTY GIVEN:	± .20% RD ; k=2	**CERTIFICATE FILE #:**	490265.2019

NOTES: ± 3% FS (0-500 / 0-1500) *** ± 4% F.S. (0-5000) ***± 5% F.S. (0-15000) *** ± 2 °F

NOTES CONT. : Q.MANUAL IM 1.5 REV 2017.1 DATED 7-18-2017

UUT INDICATED FT/MIN	DM.STD. ACTUAL FT/MIN	UUT INDICATED DEG. F	DM STD. ACTUAL DEG. F
64	65	0 TO 200°F	0 TO 200°F
110	112	43.4	43.5
206	210	69.0	68.9
498	509	99.4	99.2
503	505		
1049	1058		
1497	1514		
509	513		
3419	3460		
4992	5068		
5136	5235		
13928	14232		

STANDARDS USED:		
A220: 12" WIND TUNNEL 0 - 8000 FPM | CMC ± .203% RD | TRACE# 1520423238	DUE	05/23/2019
A24: HART SCIENTIFIC TEMP. STANDARD | ±.024 F | TRACE# 1520423238	DUE	03/07/2020

All instruments used in the performance of the shown calibration have traceability to the National Institute of Standards and Technology (NIST). The uncertainty ratio between the calibration standards (DM.STD.) used and the unit under test (UUT) is a minimum of 4:1, unless otherwise noted. Calibration has been performed per the shown procedure number, in accordance with ISO 10012:2003, ISO 17025:2005, ANSI/NCSL-Z-540.3, and/or MIL-STD-45662A. Test methods: API2530-92 & ASME MFC-3M-1989.

Dick Munns Company • 11133 Winners Circle • Los Alamitos, CA 90720
Phone (714) 827-1215 • Fax (714) 827-0823

This Calibration Certificate shall not be reproduced except in full without approval by DICK MUNNS COMPANY. The data shown applies only to the instrument being calibrated and under the stated conditions of calibration.

Date: 3/14/2019

Approved By:

Calibration Technician: D. C.

Model 1430 Microtector® Electronic Point Gage

Installation and Operating Instructions

Model 1430 Microtector® Portable Electronic Point Gage combines modern, solid-state integrated circuit electronics with a time-proven point gage manometer to provide fast, accurate pressure measurements.

SPECIFICATIONS AND FEATURES

- Accurate and repeatable to ± .00025 inches water column
- Pressure range: 0 - 2″ w.c., positive, negative, or differential pressures
- Non-toxic and inexpensive gage fluid consists of distilled water mixed with a small amount of fluorescein green color concentrate
- Convenient, portable, lightweight and self-contained, the unit requires no external power connections and is operated by a 1.5 volt penlight cell
- A.C. detector current eliminates point plating, fouling and erosion
- Micrometers are manufactured in accordance with ASME B89.1.13-2001, and are traceable to a standard at the National Institute of Standards and Technology
- Three-point mounting, dual leveling adjustment, and circular level vial assure rapid setup
- Durablock® precision-machined acrylic plastic gage body
- Sensitive 0 - 50 microamp D.C. meter acts as a detector and also indicates battery and probe condition
- Heavy 2″ thick steel base plate provides steady mounting
- Top-quality glass epoxy circuit board and solid-state, integrated circuit electronics
- Electronic enclosure of tough, molded styrene acrylonitrile provides maximum protection to components yet allows easy access to battery compartment
- Rugged sheet steel cover and carrying case protects the entire unit when not in use
- Accessories included are (2) 3-foot lengths Tygon® tubing, (2) 1/8″ pipe thread adapters and 3/4 oz. bottle of fluorescein green color concentrate with wetting agent

Maximum pressure: 100 psig with optional pipe thread connections.

Tygon® is a registered trademark of Saint-Gobain Corporation

DWYER INSTRUMENTS, INC.
P.O. BOX 373
MICHIGAN CITY, INDIANA 46361,U.S.A

Phone: 219/879-8000
Fax: 219/872-9057

www.dwyer-inst.com
e-mail: info@dwyer-inst.com

PRAXAIR
Making our planet more productive

DocNumber: 223791

Praxair Distribution, Inc.
5700 S. Alameda Street
Los Angeles CA 90058
Tel: 323-585-2154
Fax: 714-542-6689
PGVP ID: F22018

CERTIFICATE OF ANALYSIS / EPA PROTOCOL GAS

Customer & Order Information

PXPKG TUALATIN OR H
10450 SW TUALATIN SHERWOOD ROAD
TUALATIN OR 97062

Certificate Modification Date: 09/05/2018
Praxair Order Number: 70716136
Part Number: NI CD10CO33E-AS

Fill Date: 08/31/2018
Lot Number: 70086824308
Cylinder Style & Outlet: AS CGA 590
Cylinder Pressure and Volume: 2000 psig 140 ft3

Certified Concentration

ProSpec EZ Cert

Expiration Date:	09/05/2026	NIST Traceable
Cylinder Number:	CC170624	Expanded Uncertainty
10.00 %	Carbon dioxide	± 0.3 %
2.51 %	Carbon monoxide	± 0.7 %
10.50 %	Oxygen	± 0.6 %
Balance	Nitrogen	

Certification Information:

Certification Date: 09/05/2018 *Term:* 96 Months *Expiration Date:* 09/05/2026

This cylinder was certified according to the 2012 EPA Traceability Protocol, Document #EPA-600/R-12/531, using Procedure G1.

Do Not Use this Standard if Pressure is less than 100 PSIG.

CO responses have been corrected for CO2 interference. CO2 responses have been corrected for Oxygen IR Broadening effect. O2 responses have been corrected for CO2 interference.

Analytical Data:

(R=Reference Standard, Z=Zero Gas, C=Gas Candidate)

1. ***Component:*** **Carbon dioxide**

Requested Concentration: 10 %
Certified Concentration: 10.00 %
Instrument Used: Horiba VIA-510 S/N 20C194WK
Analytical Method: NDIR
Last Multipoint Calibration: 08/20/2018

First Analysis Data: **Date** 09/05/2018

Z:	0	R:	14.02	C:	10	Conc:	10
R:	14.02	Z:	0	C:	10	Conc:	10
Z:	0	C:	10	R:	14.02	Conc:	10

UOM: % **Mean Test Assay:** 10 %

Reference Standard: Type / Cylinder #: GMIS / CC141375
Concentration / Uncertainty: 14.02 % ±0.3%
Expiration Date: 06/11/2026
Traceable to: SRM # / Sample # / Cylinder #: SRM 1675b / 6-F-51 / CAL014538
SRM Concentration / Uncertainty: 13.963% / ±0.034%
SRM Expiration Date: 05/16/2022

Second Analysis Data: **Date**

Z:	0	R:	0	C:	0	Conc:	0
R:	0	Z:	0	C:	0	Conc:	0
Z:	0	C:	0	R:	0	Conc:	0

UOM: % **Mean Test Assay:** %

2. ***Component:*** **Carbon monoxide**

Requested Concentration: 2.5 %
Certified Concentration: 2.51 %
Instrument Used: Horiba VIA-510 S/N UB9UCSYX
Analytical Method: NDIR
Last Multipoint Calibration: 08/20/2018

First Analysis Data: **Date** 09/05/2018

Z:	0	R:	2.48	C:	2.51	Conc:	2.51
R:	2.48	Z:	0	C:	2.51	Conc:	2.51
Z:	0	C:	2.51	R:	2.48	Conc:	2.51

UOM: % **Mean Test Assay:** 2.51 %

Reference Standard: Type / Cylinder #: GMIS / CC102045
Concentration / Uncertainty: 2.48 % ±0.448%
Expiration Date: 04/03/2025
Traceable to: SRM # / Sample # / Cylinder #: SRM 2641a / 52-D-30 / CAL017193
SRM Concentration / Uncertainty: 4.009% / ±0.017%
SRM Expiration Date: 07/15/2019

Second Analysis Data: **Date**

Z:	0	R:	0	C:	0	Conc:	0
R:	0	Z:	0	C:	0	Conc:	0
Z:	0	C:	0	R:	0	Conc:	0

UOM: % **Mean Test Assay:** %

3. ***Component:*** **Oxygen**

Requested Concentration: 10.5 %
Certified Concentration: 10.50 %
Instrument Used: OXYMAT 5E
Analytical Method: Paramagnetic
Last Multipoint Calibration: 09/04/2018

First Analysis Data: **Date** 09/05/2018

Z:	0	R:	9.88	C:	10.49	Conc:	10.49
R:	9.88	Z:	0	C:	10.5	Conc:	10.5
Z:	0	C:	10.5	R:	9.88	Conc:	10.5

UOM: % **Mean Test Assay:** 10.5 %

Reference Standard: Type / Cylinder #: NTRM / DT0010402
Concentration / Uncertainty: 9.88 % ±0.4%
Expiration Date: 11/18/2022
Traceable to: SRM # / Sample # / Cylinder #: NTRM #170701 / N/A / NTRM #DT0010402
SRM Concentration / Uncertainty: 9.875% / ±0.040%
SRM Expiration Date: 11/18/2022

Second Analysis Data: **Date**

Z:	0	R:	0	C:	0	Conc:	0
R:	0	Z:	0	C:	0	Conc:	0
Z:	0	C:	0	R:	0	Conc:	0

UOM: % **Mean Test Assay:** %

Analyzed By **Danielle Burns**

Certified By **Jose Vasquez**

Information contained herein has been prepared at your request by qualified experts within Praxair Distribution, Inc. While we believe that the information is accurate within the limits of the analytical methods employed and is complete to the extent of the specific analyses performed, we make no warranty or representation as to the suitability of the use of the information for any purpose. The information is offered with the understanding that any use of the information is at the sole discretion and risk of the user. In no event shall the liability of Praxair Distribution, Inc., arising out of the use of the information contained herein exceed the fee established for providing such information.

PRAXAIR
Making our planet more productive

DocNumber: 225861

Praxair Distribution, Inc.
5700 S. Alameda Street
Los Angeles CA 90058
Tel: 323-585-2154
Fax: 714-542-6689
PGVP ID: F22018

CERTIFICATE OF ANALYSIS / EPA PROTOCOL GAS

Customer & Order Information

PXPKG TUALATIN OR H
10450 SW TUALATIN SHERWOOD ROAD
TUALATIN OR 97062

Certificate Modification Date: 10/01/2018
Praxair Order Number: 70743165
Part Number: NI CD17CO8E-AS

Fill Date: 09/26/2018
Lot Number: 70086826911
Cylinder Style & Outlet: AS CGA 590
Cylinder Pressure and Volume: 1290 psig 140 ft3

Certified Concentration

ProSpec EZ Cert

Expiration Date:	10/01/2026	NIST Traceable
Cylinder Number:	SA17187	Expanded Uncertainty
17.00 %	Carbon dioxide	± 0.3 %
4.31 %	Carbon monoxide	± 0.6 %
16.99 %	Oxygen	± 0.2 %
Balance	Nitrogen	

Certification Information:

Certification Date: 10/01/2018 *Term:* 96 Months *Expiration Date:* 10/01/2026

This cylinder was certified according to the 2012 EPA Traceability Protocol, Document #EPA-600/R-12/531, using Procedure G1.

Do Not Use this Standard if Pressure is less than 100 PSIG.

CO2 responses have been corrected for Oxygen IR Broadening effect. O2 responses have been corrected for CO2 interference.

Analytical Data:

(R=Reference Standard, Z=Zero Gas, C=Gas Candidate)

1. ***Component:*** **Carbon dioxide**

Requested Concentration: 17 %
Certified Concentration: 17.00 %
Instrument Used: Horiba VIA-510 S/N 20C194WK
Analytical Method: NDIR
Last Multipoint Calibration: 09/21/2018

First Analysis Data:							Date	10/01/2018
Z:	0	R:	20.1	C:	17	Conc:	17	
R:	20.1	Z:	0	C:	17	Conc:	17	
Z:	0	C:	17.01	R:	20.11	Conc:	17.01	
UOM:	%			Mean Test Assay:			17	%

Reference Standard: Type / Cylinder #: GMIS / CC187238
Concentration / Uncertainty: 20.10 % ±0.24%
Expiration Date: 06/07/2026
Traceable to: SRM # / Sample # / Cylinder #: RGM#CC193512 / N/A / RGM#CC193512
SRM Concentration / Uncertainty: 26.99% / ±0.05%
SRM Expiration Date: 05/15/2023

Second Analysis Data:							Date	
Z:	0	R:	0	C:	0	Conc:	0	
R:	0	Z:	0	C:	0	Conc:	0	
Z:	0	C:	0	R:	0	Conc:	0	
UOM:	%			Mean Test Assay:				%

2. ***Component:*** **Carbon monoxide**

Requested Concentration: 4.25 %
Certified Concentration: 4.31 %
Instrument Used: Horiba VIA-510 S/N UB9UCSYX
Analytical Method: NDIR
Last Multipoint Calibration: 09/21/2018

First Analysis Data:							Date	10/01/2018
Z:	0	R:	5	C:	4.31	Conc:	4.31	
R:	5	Z:	0	C:	4.3	Conc:	4.3	
Z:	0	C:	4.32	R:	5.01	Conc:	4.32	
UOM:	%			Mean Test Assay:			4.31	%

Reference Standard: Type / Cylinder #: GMIS / CC242633
Concentration / Uncertainty: 5.00 % ±0.543%
Expiration Date: 04/03/2025
Traceable to: SRM # / Sample # / Cylinder #: SRM 2642a / 51-D-23 / FF23106
SRM Concentration / Uncertainty: 7.859% / ±0.039%
SRM Expiration Date: 07/15/2019

Second Analysis Data:							Date	
Z:	0	R:	0	C:	0	Conc:	0	
R:	0	Z:	0	C:	0	Conc:	0	
Z:	0	C:	0	R:	0	Conc:	0	
UOM:	%			Mean Test Assay:				%

3. ***Component:*** **Oxygen**

Requested Concentration: 17 %
Certified Concentration: 16.99 %
Instrument Used: OXYMAT 5E
Analytical Method: Paramagnetic
Last Multipoint Calibration: 09/04/2018

First Analysis Data:							Date	10/01/2018
Z:	0	R:	20.86	C:	16.99	Conc:	16.99	
R:	20.86	Z:	0	C:	16.99	Conc:	16.99	
Z:	0	C:	16.99	R:	20.86	Conc:	16.99	
UOM:	%			Mean Test Assay:			16.99	%

Reference Standard: Type / Cylinder #: GMIS / CC75874
Concentration / Uncertainty: 20.86 % ±0.111%
Expiration Date: 11/07/2025
Traceable to: SRM # / Sample # / Cylinder #: SRM 2659a / 71-E-19 / FF22331
SRM Concentration / Uncertainty: 20.863% / ±0.021%
SRM Expiration Date: 08/23/2021

Second Analysis Data:							Date	
Z:	0	R:	0	C:	0	Conc:	0	
R:	0	Z:	0	C:	0	Conc:	0	
Z:	0	C:	0	R:	0	Conc:	0	
UOM:	%			Mean Test Assay:				%

Analyzed By **Jose Vasquez**

Certified By **Danielle Burns**

Information contained herein has been prepared at your request by qualified experts within Praxair Distribution, Inc. While we believe that the information is accurate within the limits of the analytical methods employed and is complete to the extent of the specific analyses performed, we make no warranty or representation as to the suitability of the use of the information for any purpose. The information is offered with the understanding that any use of the information is at the sole discretion and risk of the user. In no event shall the liability of Praxair Distribution, Inc., arising out of the use of the information contained herein exceed the fee established for providing such information.