heatilator
The first name in fireplaces

Icon

50" Wood Fireplace

Scan QR code for installation manual for final dimensions and requirements.

MODEL	FRONT WIDTH		BACK WIDTH		HEIGHT		DEPTH		FIREPLACE OPENING
ICON50	Actual	Framing	Actual	Framing	Actual	Rough Opening Framing*	Actual	Framing	50" x 33"
	60-5/8"	61-5/8"	41-5/8"	61-5/8"	70-1/2"	71"	29-1/2"	30-1/2"	

* Framing must be filled in to top of front standoff after unit is installed.

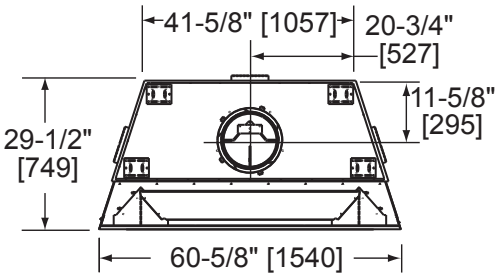

Top View

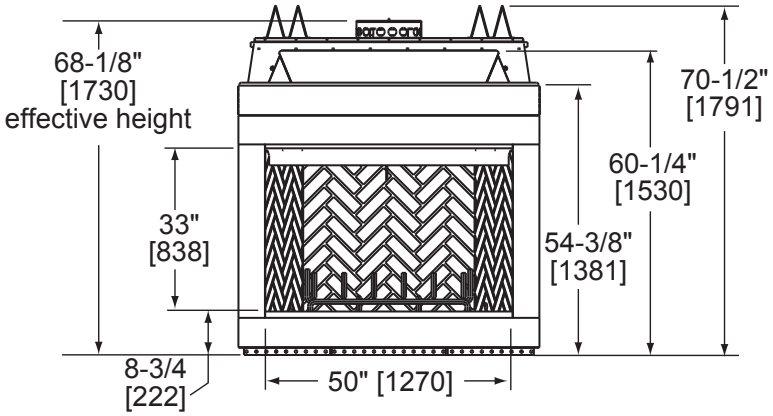

Front View

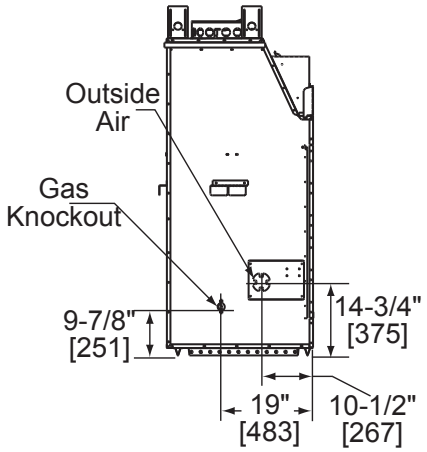

Left Side View

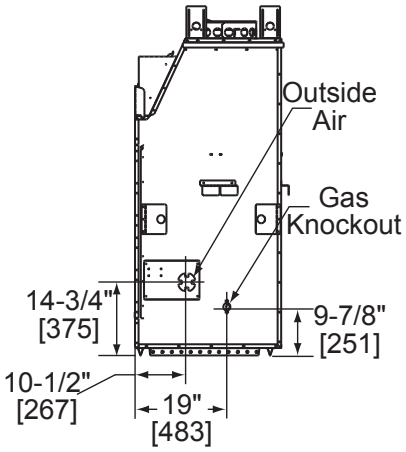

Right Side View

APPLIANCE LOCATION

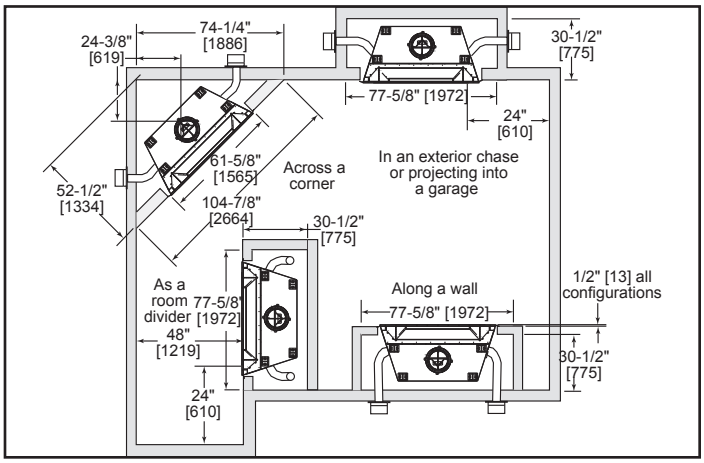

MANTEL PROJECTIONS

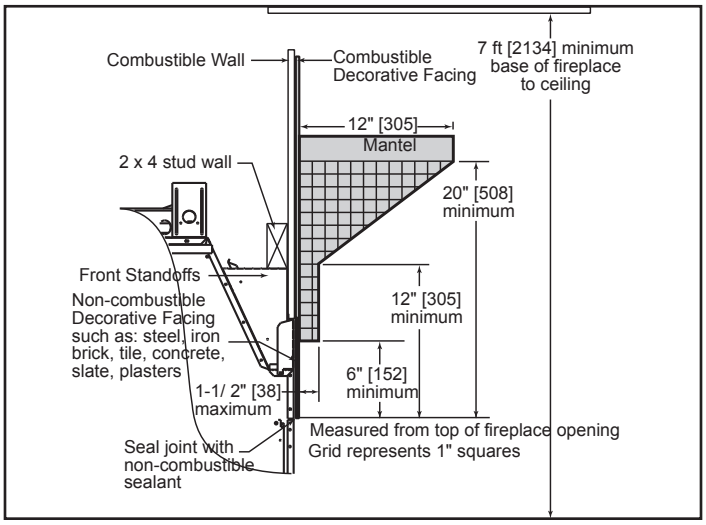

MANTEL LEG/WALL PROJECTIONS

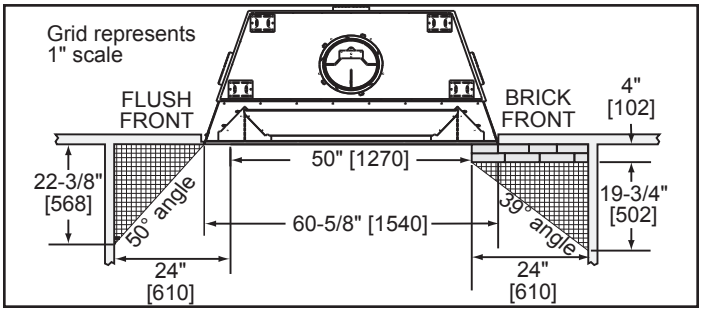

HEARTH EXTENSIONS

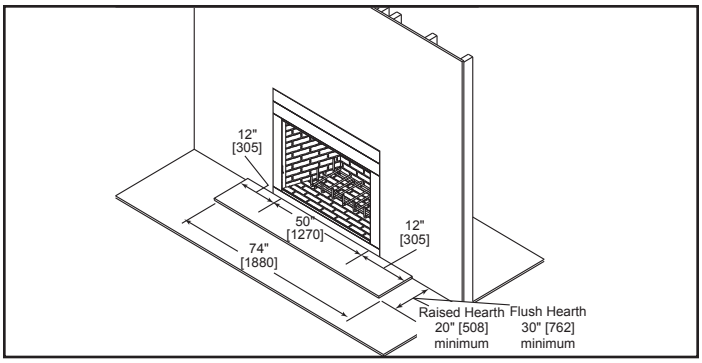

FRAMING DIMENSIONS

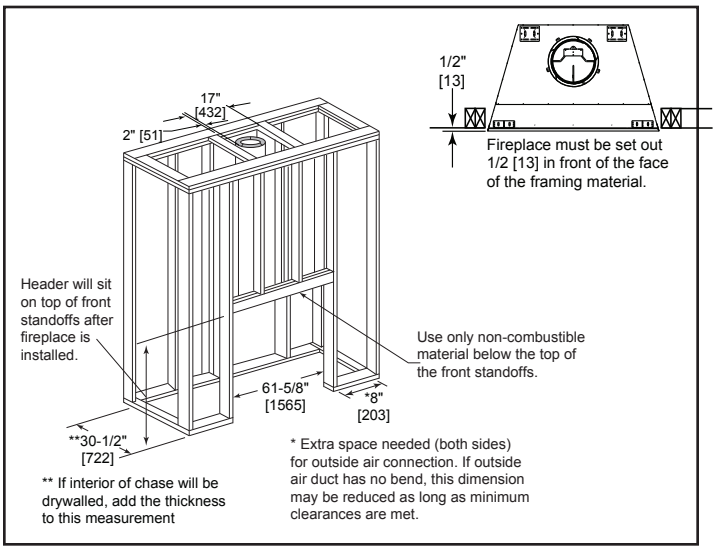

CLEARANCES TO COMBUSTIBLES

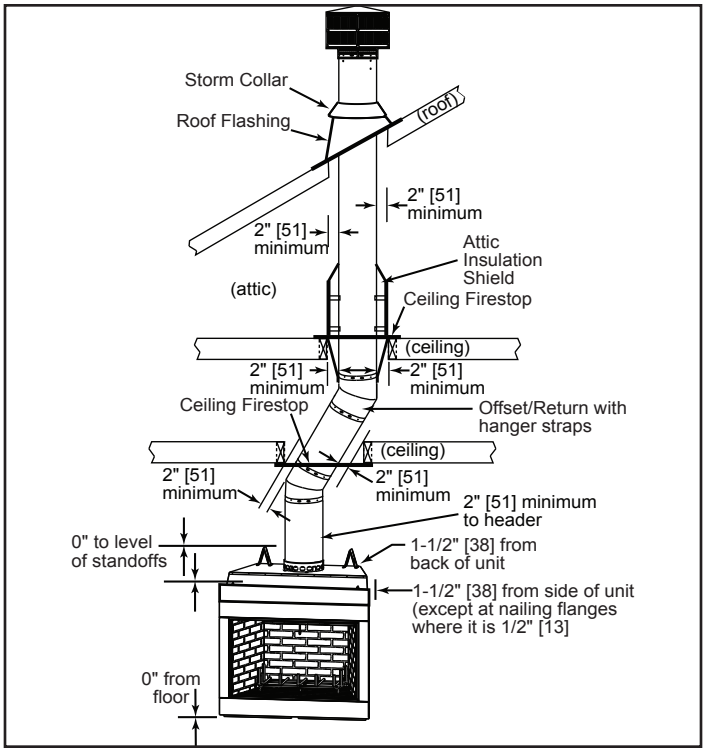

HEARTH EXTENSION CONSTRUCTION

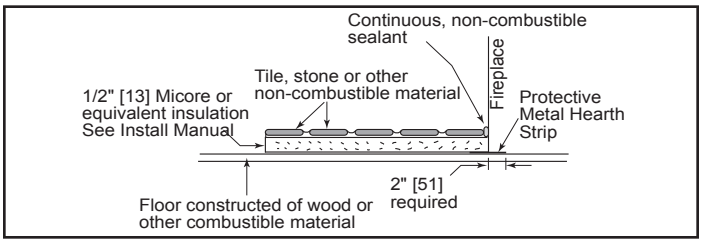

PRODUCT LISTING CODES	
US	UL 127

c UL US LISTED

Product information provided is not complete and is subject to change without notice. Product installation must adhere strictly to instructions accompanying product to avoid risk of fire and potential injury.

Additional information can be found online at www.heatilator.com.

heatilator
The first name in fireplaces
7571 215th Street West | Lakeville, MN 55044
800-927-6841 | heatilator.com