PRODUCT SPECIFICATIONS

LCUF32-R Lo-Rider Vent Free Firebox

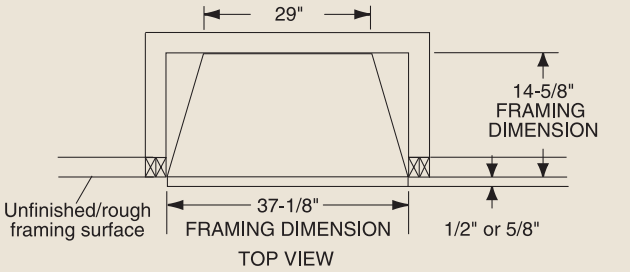

TOP VIEW

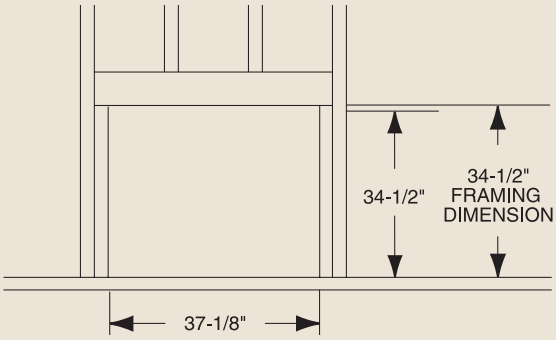

FRONT VIEW

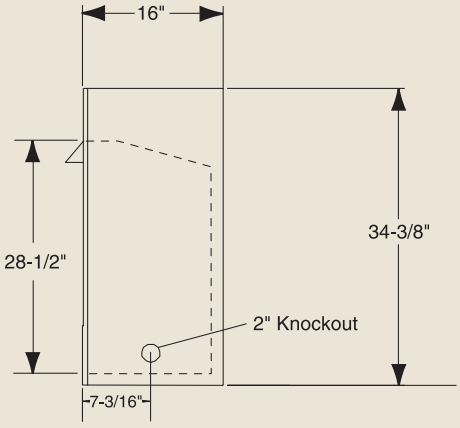

SIDE VIEW

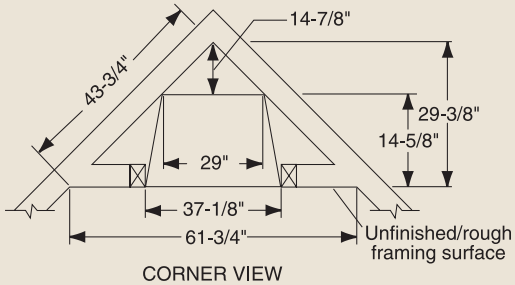

CORNER VIEW

MINIMUM HEARTH DIMENSIONS

Front opening width: 29-7/8"
Front opening height: 27-1/2"
Rear wall width: 23-3/8"
Firebox depth: 13-3/8"

TECHNICAL INFORMATION

Clearance to Fireplace: Zero
CSA Design Certified

FIELD INSTALLED ACCESSORIES

Curved Trim: Brass, Pewter, Black
Brass Hood
Wide Profile Brass Hood
Wood Cabinet Surrounds and Hearths
Classic and Designer Facings

LIMITED LIFETIME WARRANTY

MADE IN U.S.A.

A Brand of Monessen Hearth Systems Co.
149 Cleveland Drive, Paris, Kentucky 40361
www.monessenhearth.com

Monessen

To avoid personal injury or property damage, the product described by this brochure must be installed, operated and maintained in strict compliance with the instructions packaged with the product and all applicable building or fire codes. Contact local building or fire officials about restrictions and installation inspection requirements. All photographs and drawings on this brochure are for illustrative purposes only and are not intended for, nor should they be used as a substitute for the instructions packaged with the unit. Appearance and specifications of the product are subject to change without notice. © 2009 Monessen Hearth Systems Co.