HARMAN®
BUILT TO A STANDARD, NOT A PRICE

Service Parts

P68 Pellet

Steel Pellet Stove
1-70-00688-1 (Black)

Beginning Manufacturing Date: N/A
Ending Manufacturing Date: Active

Retired Units

1-70-00688-2 (Charcoal) (June 2011)
1-70-00688-3 (Goldenfire) (June 2011)
1-70-00688-4 (Metallic Blue) (Jan 2010)
1-70-00688-5 (Honey Glo) (June 2009)
1-70-00688-10 (Mojave Red) (Jan 2010)
1-70-00688-12 (Forest Green) (Jan 2010)

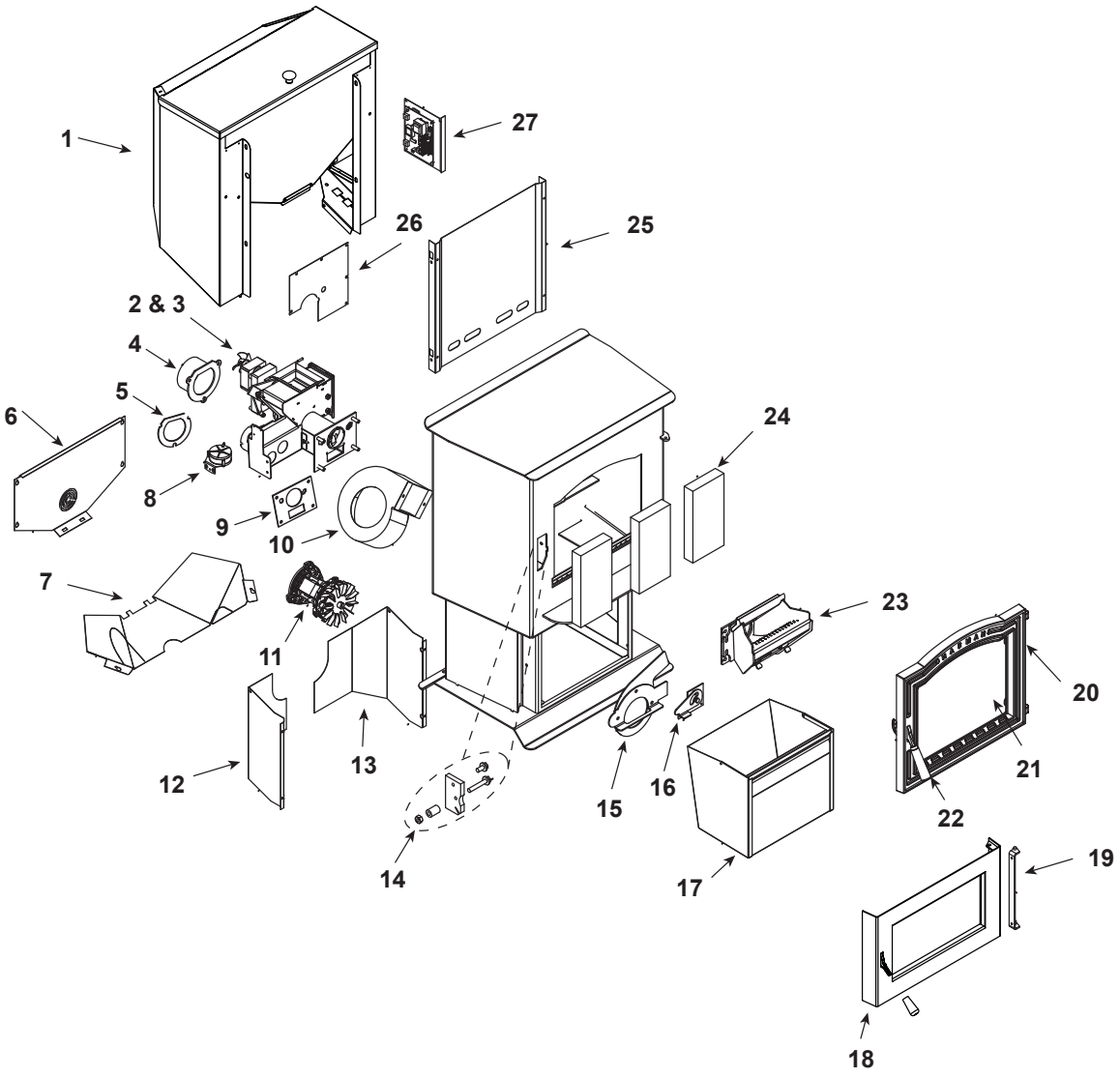

IMPORTANT: THIS IS DATED INFORMATION. Parts must be ordered from a dealer or distributor. **Hearth and Home Technologies does not sell directly to consumers.** Provide model number and serial number when requesting service parts from your dealer or distributor.

ITEM	Description	COMMENTS	PART NUMBER	Stocked at Depot
1	Hopper Assembly	Pre 008280309	1-10-06709	Y
		Post 008280309	1-10-00688	
	Hopper Extention Switch Kit		1-00-06826	Y
	Hopper Knob	Post 008295042	1-00-02000-1	
	Hopper Switch	Post 008284286	3-20-232108	Y

Additional service parts on following page.

Beginning Manufacturing Date: N/A
Ending Manufacturing Date: Active

#2 Pre Serial Number 008280309 Feeder Assembly

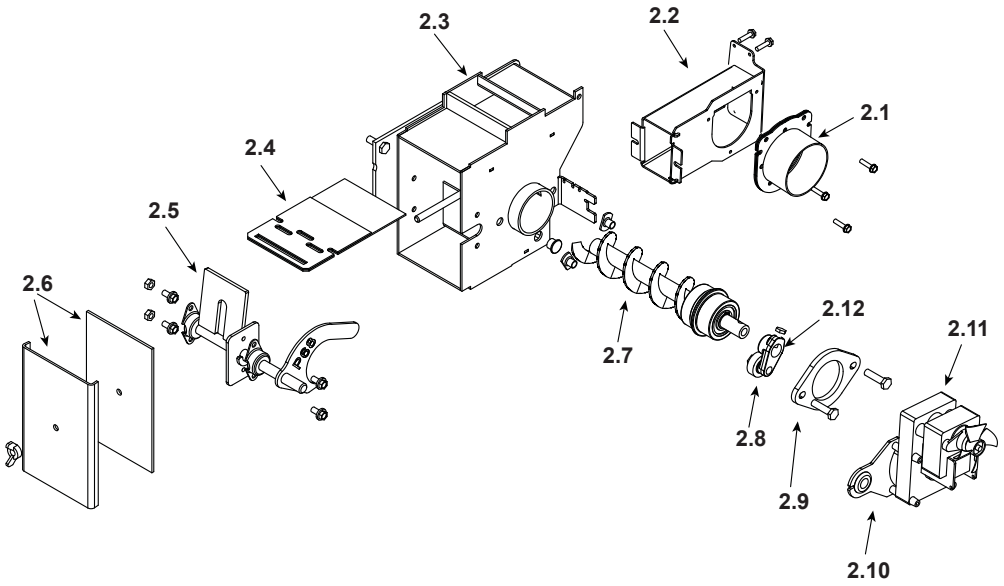

IMPORTANT: THIS IS DATED INFORMATION. Parts must be ordered from a dealer or distributor. **Hearth and Home Technologies does not sell directly to consumers.** Provide model number and serial number when requesting service parts from your dealer or distributor.

ITEM	Description	COMMENTS	PART NUMBER	Stocked at Depot
2	Feeder Assembly	Pre 008280309	1-10-07806	
2.1	Air Intake Damper Assembly		1-10-06466W	
2.2	Air Intake Weldment		1-10-06461	
2.3	Feeder Weldment		1-10-677150	Y
2.4	Slide Plate Assembly		1-10-08037	Y
2.5	Pusher Arm Assembly		1-10-06719	Y
2.6	Feed Cover and Gasket	2 Sets	1-00-677152	Y
2.7	Auger Assembly		3-50-00465	Y
2.8	Cam Bearing		3-31-3014	Y
2.9	Bearing Flange w/Hardware		1-00-04035	Y
2.10	Bracket, Gear Motor	Pkg of 2	1-00-01534	Y
2.11	Gear Motor, 4 RPM		3-20-60906	Y
	Fan Blade, Feed Motor	Pkg of 3	3-20-2046399-3	Y
2.12	Cast Cam Block		3-00-00153	Y
	Feeder Air Crossover Kit		1-00-67900	Y
	Feeder Repair Kit		1-00-677150	Y
	Gasket, Feeder, Air Intake	Pkg of 6	3-44-72224-6	Y
	Motor Bracket Grommet	Pkg of 12	3-31-2761-12	
	Pillow Block	Pkg of 4	3-31-3614087-4	Y

Additional service parts on following page.

Beginning Manufacturing Date: N/A
Ending Manufacturing Date: Active

#3 Post Serial Number 008280309 Feeder Assembly

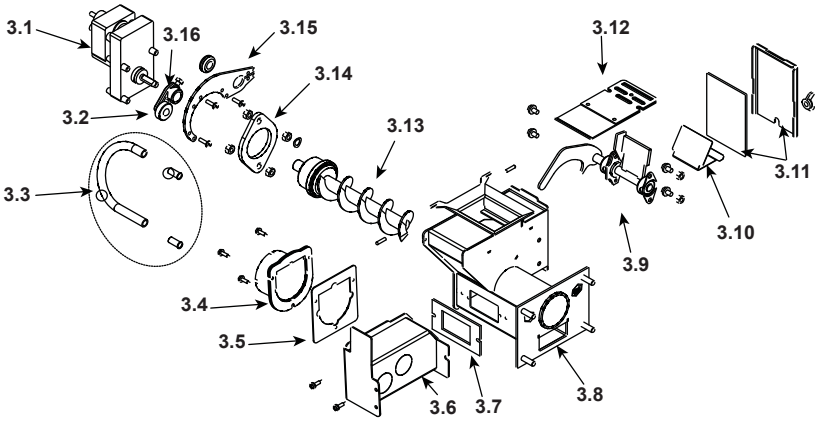

IMPORTANT: THIS IS DATED INFORMATION. Parts must be ordered from a dealer or distributor. **Hearth and Home Technologies does not sell directly to consumers.** Provide model number and serial number when requesting service parts from your dealer or distributor.

ITEM	Description	COMMENTS	PART NUMBER	Stocked at Depot
3	Feeder Assembly	Post 008280309	1-10-07906A	
3.1	Pellet Feeder Gear Motor, 6RPM		3-20-09302	Y
	Gear Motor Fan Blade	Pkg of 3	3-20-09302-3	Y
3.2	UL Feeder Cam		3-31-3014	Y
3.3	Feeder Air Crossover Kit		1-00-67900	Y
	9MM Silicone Tube	5 Ft	1-00-511427	Y
3.4	Pellet Air Intake Assembly		1-10-06810A	
3.5	Gasket Feeder Air Intake	Pkg of 6	3-44-72224-6	Y
3.6	UL Feeder Air Intake		1-10-72228	
3.7	Gasket Ultra Air Intake	Pkg of 10	3-44-677160-10	Y
3.8	Ultra Feeder Weldment		1-10-724132	Y
3.9	UL Feeder Pusher Arm		1-10-677187W	Y
3.10	Fines Deflector	**No longer available**	2-00-677138-10	
3.11	Gasket, UL Feeder Cover		1-00-677122	Y
3.12	Slide Plate Assembly		1-10-677121A	Y
3.13	UL Feeder Auger Assembly		3-50-00565	Y
3.14	Bearing Flange w/Hardware		1-00-04035	Y
3.15	UL Feeder Gear Motor Bracket w/Grommet		1-00-247406	Y
3.16	UL Feeder Cam Block		3-00-677154	Y
	Gasket, Hopper Throat		3-44-677185	Y
	Hopper Switch Feeder Fitting	Pkg of 2	1-00-142818	Y
	Motor Bracket Grommet	Pkg of 12	3-31-2761-12	
	Pillow Block	Pkg of 4	3-31-3614087-4	Y
	Silicone Tubing, 1/8"	5 Ft	1-00-5113574	Y

Additional service parts on following page.

HARMAN®
BUILT TO A STANDARD, NOT A PRICE

Service Parts

P68 Pellet

Beginning Manufacturing Date: N/A
Ending Manufacturing Date: Active

IMPORTANT: THIS IS DATED INFORMATION. Parts must be ordered from a dealer or distributor. **Hearth and Home Technologies does not sell directly to consumers.** Provide model number and serial number when requesting service parts from your dealer or distributor.

ITEM	Description	COMMENTS	PART NUMBER	Stocked at Depot
4	Flue Tail Pipe		3-00-247237	Y
5	Gasket, Burn Pot/Tai Pipe	Pkg of 5 sets	1-00-07381	Y
6	Auger Motor Cover		2-00-06470P	Y
7	Auger Motor Shield		2-00-06467P	Y
8	Differential Switch		3-20-6866	Y
9	Gasket, Burn Pot/Tai Pipe	Pkg of 5 sets	1-00-07381	Y
10	Distribution Blower		3-21-33647	Y
11	Combustion Blower		3-21-08639	Y
	Combustion Blower Grommets & Spacers	Pkg of 25	1-00-960026	
	Combustion Blower Mounting Screws (Pkg of 100)	Commonly required for Combustion Blower replacement	1-00-53483208	
	Fan Blade, 5” Double Paddle (Combustion Blower)		3-20-502221	Y
12	Rear Cover Left		2-00-06468-1P	Y
13	Rear Cover Right		2-00-06468-2P	Y
14	Door Latch Assembly Contains: Latch Adjustment, SHCS(1/4-20 X 1), Lock Nut (1/4 X 20), Jam Nut (HX Jam 1/4-20Z) Steel Bushing,		1-00-06713	Y
15	Comb Intake Weldment		1-10-08516S	Y
16	Retainer Assembly		1-10-08533S	Y
17	Ash Pan		1-10-05800	Y
18	Ash Door Assembly	Pre 008295042	1-10-06724S	
		Post 008295042	1-10-06798A	
	Wood Knob	Pkg of 3	3-40-08746-3	
19	Bolt on Hinge		2-00-06968B	
20	Cast Door Frame		3-00-06718P	
	Slick Pins, 1 pair		1-00-110	Y
21	Glass Panel w/Gasket		1-00-00688	Y
	Glass Clip w/Hardware	Pkg of 4	1-00-249140	Y
22	Door Handle Assembly Contains: Handle, 6 mm Washer, SHCS, handle, Dowel, Plunger, SSS, Bhcs		1-00-249119	Y
	Ball Plunger	Pkg of 3	3-31-5500-3	
	Front Door Latch		3-00-249119P	Y
	Latch Ball Spring Bracket		2-00-06714	
	Wooden Handle , Load Door	Pkg of 2	1-00-00247	Y
23	Burn Pot Weldment		1-10-06723	Y
	Flame Guide		3-00-03000	Y
	Clean Out Cover	2 Sets	1-00-06623	Y
	Thumb Screw	Pkg of 10	3-31-782108-10	Y
24	Fire Brick 4-1/2 x 9 x 1-1/4”	Pkg of 7	1-00-900450125	Y
	Fire Brick , Full Skid	414 Pcs	3-40-900450-414	
25	Hopper Heat Shield		2-00-06715B	
26	Feeder Opening Cover		2-00-773826L	

HARMAN®
BUILT TO A STANDARD, NOT A PRICE

Service Parts

P68 Pellet

Beginning Manufacturing Date: N/A
Ending Manufacturing Date: Active

IMPORTANT: THIS IS DATED INFORMATION. Parts must be ordered from a dealer or distributor. **Hearth and Home Technologies does not sell directly to consumers.** Provide model number and serial number when requesting service parts from your dealer or distributor.

ITEM	Description	COMMENTS	PART NUMBER	Stocked at Depot
27	Circuit Board w/Knobs & Shafts		1-00-05886	Y
	Circuit Board Plate-Studded w/label		1-10-08327	
	Control Panel Label		3-90-07766	
	Knob, Contol Board/D-Shaft	25 Sets	1-00-015605	Y
	Airwash O-rings	Pkg of 10	1-00-939639	Y
	Arrow Burn Pot Scraper	Pkg of 10	2-00-773850-10	
	Cradle Assembly			
	Igniter Holder, Cradle, & Flat Bottom	3 Sets	1-00-06620	Y
	Diagnostic Display Module		3-20-05401	Y
	DDM Replacement Cable		1-00-05402	
	Disconnect, Female	Pkg of 25	1-00-00959	Y
	Draft Meter Assembly		1-00-00637	Y
	Draft Meter Bolt and Tube		1-00-04004	
	Fuse, 5 Amp	Pkg of 5	3-20-23705-5	Y
	Gasket, 1/4” Rope Black W/PSA (Glass)	15 Ft	1-00-2312	Y
	Gasket, 3/8” Rope White LD (Ash or Load Door)	30 Ft	1-00-00888	Y
	Gasket, Burn Pot/Tailpipe	Pkg of 5	1-00-07381	Y
	Gasket, Burn Pot		3-44-237639	Y
	Gasket, Hopper Lid		1-00-00248	Y
	Hopper Lid w/Hinge, Swell Latch	Pre 008295042	1-10-09109	Y
	Hopper Lid w/Hinge, Knob	Post 008295042	1-10-06493	
	Igniter		3-20-677200	Y
		Pkg of 10	1-00-677200	Y
	Labels, Caution & Danger	10 ea	1-00-200408541	
	Label, Caution		3-90-00247	
	Swell Latch & Spacer	Pre 008295042	1-00-199110	Y
	Rubber Spacer	Pkg of 10	3-31-901311-10	
	Load Door Hinge		2-00-06707L	
	Hopper Muffler and Fittings	1 set	1-00-18186618	Y
	Manual Pack		1-00-436168	
	Outside Air Termination Cap		1-10-09542	
	Room Sensor		3-20-00906	Y
	Power Cord		3-20-39685	Y
	Thermister Probe (ESP Probe)	Pre 008281295	3-20-11744	Y
		Post 008281295	3-20-00844	Y
	Thermostat Extension		3-20-00607	Y
	Touch up Paint, Black, 12 oz Can	Pre 008293174	3-42-1990	
		Post 008293174	3-42-19905	
	Wiring Harness		3-20-08727	Y

Additional service parts on following page.

HARMAN®
BUILT TO A STANDARD, NOT A PRICE

Service Parts

P68 Pellet

Beginning Manufacturing Date: N/A
Ending Manufacturing Date: Active

IMPORTANT: THIS IS DATED INFORMATION. Parts must be ordered from a dealer or distributor. **Hearth and Home Technologies does not sell directly to consumers.** Provide model number and serial number when requesting service parts from your dealer or distributor.

ITEM	Description	COMMENTS	PART NUMBER	Stocked at Depot
	Leaf Door Trim	Gold	3-43-06717-4	
		Brushed Stainless	3-43-06717-7	
		Bright Nickel	3-43-06717-8	
	Modern Door Trim	Brushed Stainless	3-43-06797-7	
	Ash Lip Trim	Gold	3-43-08400	
		Brushed Stainless	3-43-08400-7	
		Bright Nickel	3-43-08400-8	
	Tile Frame	Gold	3-43-06729-4	
		Brushed Stainless	3-43-06729-7	
		Bright Nickel	3-43-06729-8	
	Spring Clips (Required for the installation of Tile Frame)	Pkg of 20	3-31-232547-20	