HARMAN®
BUILT TO A STANDARD, NOT A PRICE

Service Parts

P61-C Pellet

Steel Pellet Stove
1-90-06100-1 (Black)

Beginning Manufacturing Date: March 2019
Ending Manufacturing Date: Active

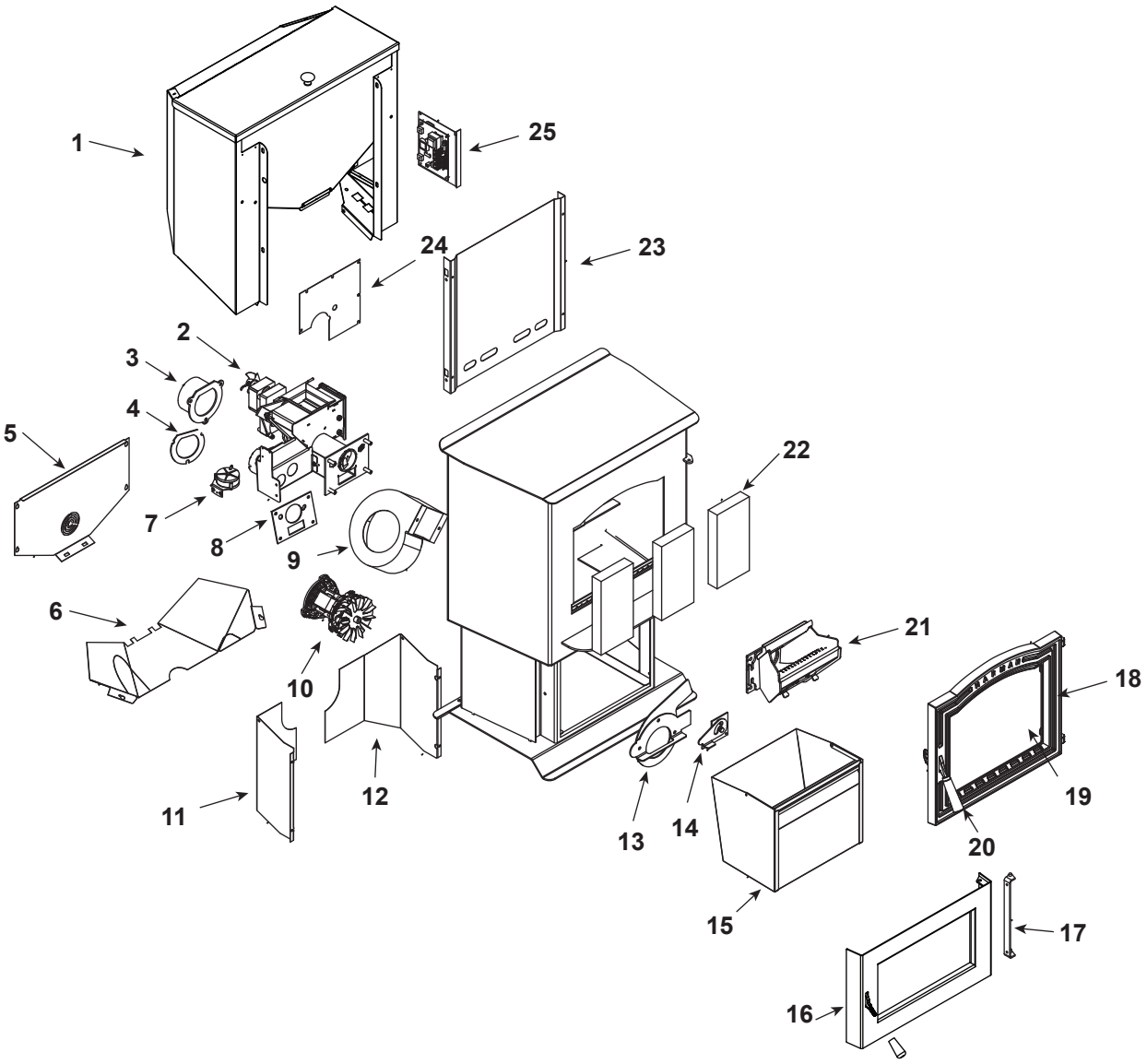

IMPORTANT: THIS IS DATED INFORMATION. Parts must be ordered from a dealer or distributor. **Hearth and Home Technologies does not sell directly to consumers.** Provide model number and serial number when requesting service parts from your dealer or distributor.

ITEM	Description	COMMENTS	PART NUMBER	Stocked at Depot
1	Hopper Assembly		1-10-05803	Y
	Hopper Knob		1-00-02000-1	
	Hopper Latch Assembly	Pre HF2402759	1-00-773901	
		Post HF2402759	SRV8000-050	

Additional service parts on following page.

HARMAN®
BUILT TO A STANDARD, NOT A PRICE

Service Parts

P61-C Pellet

Beginning Manufacturing Date: March 2019
Ending Manufacturing Date: Active

#2 Feeder Assembly

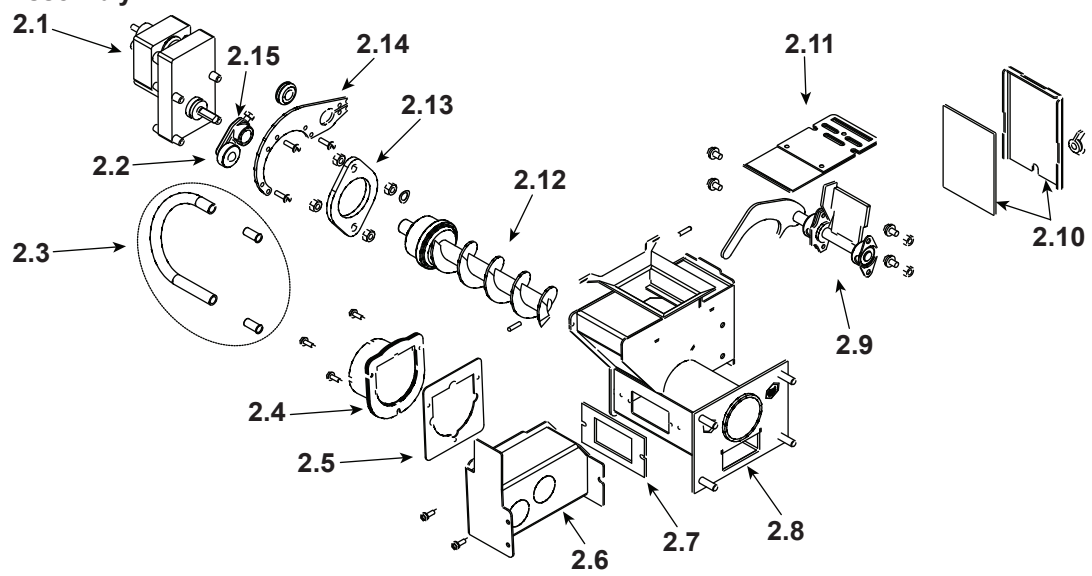

IMPORTANT: THIS IS DATED INFORMATION. Parts must be ordered from a dealer or distributor. **Hearth and Home Technologies does not sell directly to consumers.** Provide model number and serial number when requesting service parts from your dealer or distributor.

ITEM	Description	COMMENTS	PART NUMBER	Stocked at Depot
2	Feeder Assembly	Post 008085803	1-10-09684A	
2.1	Pellet Feeder Gear Motor, 4RPM		3-20-60906	Y
2.2	UL Feeder Cam		3-31-3014	Y
2.3	Feeder Air Crossover Kit		1-00-67900	Y
	9MM Silicone Tube	5 Ft	1-00-511427	Y
2.4	Pellet Air Intake Assembly		1-10-06810A	
2.5	Gasket Feeder Air Intake	Pkg of 6	3-44-72224-6	Y
2.6	UL Feeder Air Intake		1-10-72228	
2.7	Gasket Ultra Air Intake	Pkg of 10	3-44-677160-10	Y
2.8	Ultra Feeder Weldment		1-10-724132	Y
2.9	UL Feeder Pusher Arm		1-10-677188W	Y
2.10	Gasket, UL Feeder Cover		1-00-677122	Y
2.11	Slide Plate Assembly		1-10-677121A	Y
2.12	UL Feeder Auger Assembly		3-50-00565	Y
2.13	Pellet Feeder Bearing Retainer w/Hardware	Pkg of 2	1-00-04035	Y
2.14	UL Feeder Gear Motor Bracket w/Grommet		1-00-247406	Y
2.15	UL Feeder Cam Block		3-00-677154	Y
	Gasket, Hopper Throat		3-44-677185	Y
	Hopper Switch Feeder Fitting	Pkg of 2	1-00-142818	Y
	Motor Bracket Grommet	Pkg of 12	3-31-2761-12	
	Pillow Block	Pkg of 4	3-31-3614087-4	Y
	Silicone Tubing, 1/8”	5 Ft	1-00-5113574	Y

Additional service parts on following page.

HARMAN®
BUILT TO A STANDARD, NOT A PRICE

Service Parts

P61-C Pellet

Beginning Manufacturing Date: March 2019
Ending Manufacturing Date: Active

IMPORTANT: THIS IS DATED INFORMATION. Parts must be ordered from a dealer or distributor. **Hearth and Home Technologies does not sell directly to consumers.** Provide model number and serial number when requesting service parts from your dealer or distributor.

ITEM	Description	COMMENTS	PART NUMBER	Stocked at Depot
3	Flue Tail Pipe		3-00-247237	Y
4	Gasket Set, Burn Pot & Tailpipe	Pkg of 5 Sets	1-00-07381	Y
5	Auger Motor Cover		2-00-06470P	Y
6	Auger Motor Shield		2-00-06467P	Y
7	Differential Switch		3-20-6866	Y
8	Gasket Set, Burn Pot & Tailpipe	Pkg of 5 Sets	1-00-07381	Y
9	Distribution Blower		3-21-33647	Y
10	Combustion Motor	Fan blades not included	3-21-08639	Y
	Combustion Blower Grommets & Spacers	Pkg of 25	1-00-960026	
	Combustion Blower Mounting Screws (Pkg of 100)	Commonly required for Combustion Blower replacement	1-00-53483208	
	Fan Blade, 5” Double Paddle (Combustion Blower)		3-20-502221	Y
11	Rear Cover Left		2-00-06468-1P	Y
12	Rear Cover Right		2-00-06468-2P	Y
13	Comb Intake Weldment		1-10-08516S	Y
14	Retainer Assembly		1-10-08533S	Y
15	Ash Pan		1-10-05800	Y
16	Ash Door Assembly		1-10-06798A	
	Wood Handle		1600663	
17	Bolt on Hinge		2-00-06968B	
18	Cast Door Frame		4-00-06800P	
	Cast Door w/Glass		1-10-06800M	
	Pin, Slick (Pkg of 2)	Post #HF2402358	1-00-110	
19	Glass Panel w/Gasket		1-00-950133647	Y
	Glass Clip w/Hardware (Pkg of 4)		1-00-249140	
20	Door Handle Assembly		1-00-453001	Y
	Contains: Wooden Handle, Wave Washer, SHCS, Cast Handle, , SSS, Bhcs, Cast Pawl			
	Paw Bolt	**No longer available**	4-31-06393	
	Wooden Handle w/Hardware, Load Door	2 Sets	1-00-00247	Y
	Wave Washer	Pkg of 10	SRV3-31-453013	
21	Burn Pot Weldment		1-10-05802	Y
	Flame Guide		3-00-08534	Y
	Clean Out Cover	2 Sets	1-00-06623	Y
	Thumb Screw	Pkg of 10	3-31-782108-10	Y
22	Fire Brick 4-1/2 x 9 x 1-1/4”	Pkg of 7	1-00-900450125	Y
	Fire Brick , Full Skid	414 Pcs	3-40-900450-414	
23	Hopper Heat Shield		2-00-06471B	
24	Feeder Cover		2-00-773826L	

Additional service parts on following page.

HARMAN®
BUILT TO A STANDARD, NOT A PRICE

Service Parts

P61-C Pellet

Beginning Manufacturing Date: March 2019
Ending Manufacturing Date: Active

IMPORTANT: THIS IS DATED INFORMATION. Parts must be ordered from a dealer or distributor. **Hearth and Home Technologies does not sell directly to consumers.** Provide model number and serial number when requesting service parts from your dealer or distributor.

ITEM	Description	COMMENTS	PART NUMBER	Stocked at Depot
25	Circuit Board w/Knobs & Shafts		1-00-05886	Y
	Circuit Board Plate, Studded w/label		1-10-08327	
	Control Panel Label		3-90-07766	
	Knob, Contol Board/D-Shaft	25 Sets	1-00-015605	Y
	Arrow Burn Pot Scraper	Pkg of 10	2-00-773850-10	
	Cast Weld on Door Hinge (Qty 2 req)	Pre #HF2402358	3-00-773813	
	Cradle Assembly (Igniter Holder, Cradle, & flat Bottom)		1-00-777907	Y
	Diagnostic Display Module		3-20-05401	Y
	DDM Replacement Cable		1-00-05402	
	Draft Meter Assembly		1-00-00637	Y
	Draft Meter Bolt and Tube		1-00-04004	
	Fuse, 5 Amp Ceramic	Pkg of 5	1-00-05237	Y
	Gasket, 1/4” Rope Black W/PSA (Glass)	15 Ft	1-00-2312	Y
	Gasket, 3/8” Rope White LD (Ash or Load Door)	15 Ft	1-00-1203589	Y
	Gasket Set, Burn Pot & Tailpipe	Pkg of 5 Sets	1-00-07381	Y
	Gasket, Hopper Lid		1-00-00248	Y
	Hopper Lid w/Hinge, Knob		1-10-06493	
	Igniter		3-20-677200	Y
		Pkg of 10	1-00-677200	Y
	Labels, Caution & Danger	10 ea	1-00-200408541	
	Manual Pack		SRV1-00-00680	
	Outside Air Termination Cap		1-10-09542	
	Power Cord		3-20-39685	Y
	Room Sensor		3-20-00906	Y
	Tinnerman 10-24	Pkg of 25	SRV3-31-00177	
	Thermostat Extension		3-20-00607	Y
	Thermister Probe (ESP Probe)		3-20-00844	Y
	Touch up Paint, Black, 12 oz Can		3-42-19905	
	Wiring Harness		3-20-08727	Y
	Leaf Door Trim	Brushed Stainless	3-43-06802-7	
		No longer available	3-43-06802-8	
	Modern Door Trim	Brushed Stainless	3-43-06839-7	
	Ash Lip Trim	Brushed Stainless	3-43-08400-7	
		Bright Nickel	3-43-08400-8	
	Tile Frame	Brushed Stainless	3-43-06729-7	
		No longer available	3-43-06729-8	
	Spring Clips (Required for installation of Tile Frame)	Pkg of 20	3-31-232547-20	