HEAT&GLO

No one builds a better fire

Service Parts

COSMO42-IFT

42” Gas Fireplace - DV

Beginning Manufacturing Date: Oct 2011
Ending Manufacturing Date: Nov 2017

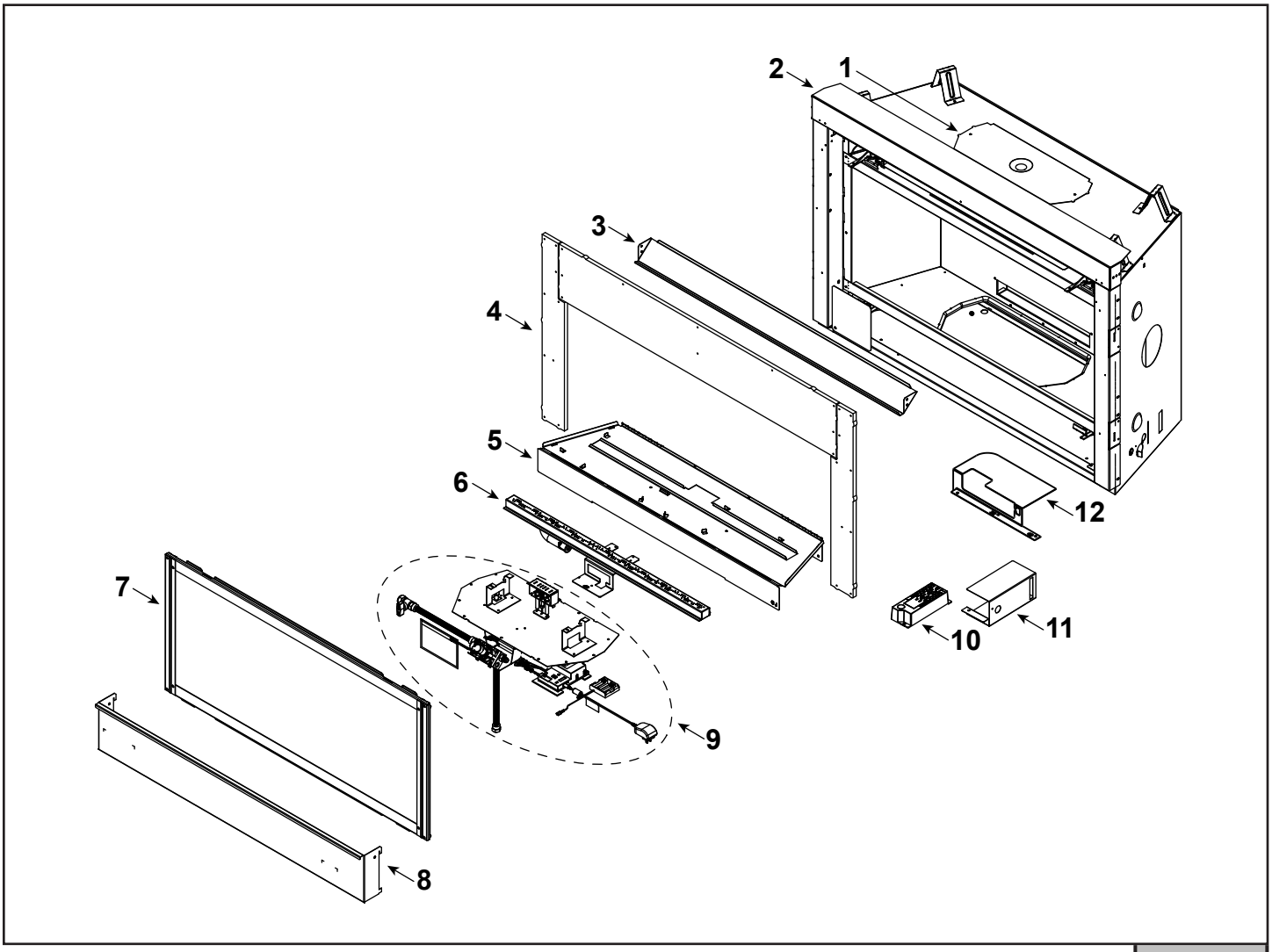

IMPORTANT: THIS IS DATED INFORMATION. Parts must be ordered from a dealer or distributor. **Hearth and Home Technologies does not sell directly to consumers**. Provide model number and serial number when requesting service parts from your dealer or distributor.

ITEM	DESCRIPTION	COMMENTS	PART NUMBER	Stocked at Depot
1	Header Heat Shield		2118-120	
2	Non-Combustible Support		2491-104	
3	Top Fill		2491-135	
4	Non-Combustible Assembly		2491-079	
5	Base Pan		2491-111	
6	Burner Assembly		2491-007	**Y**
7	Glass Door Assembly		GLA-42HNG	**Y**
8	Lower Panel		2619-104	
9	Valve Assembly		**Refer to Valve Page**	
10	Junction box		SRV4021-013	**Y**
11	Heat Shield, Junction Box		2491-129	
12	Heat Shield, Components		2493-129	

Additional service part numbers appear on following page.

HEAT&GLO

No one builds a better fire

Service Parts

COSMO42-IFT

Beginning Manufacturing Date: Oct 2011
Ending Manufacturing Date: Nov 2017

#9 Valve Assembly

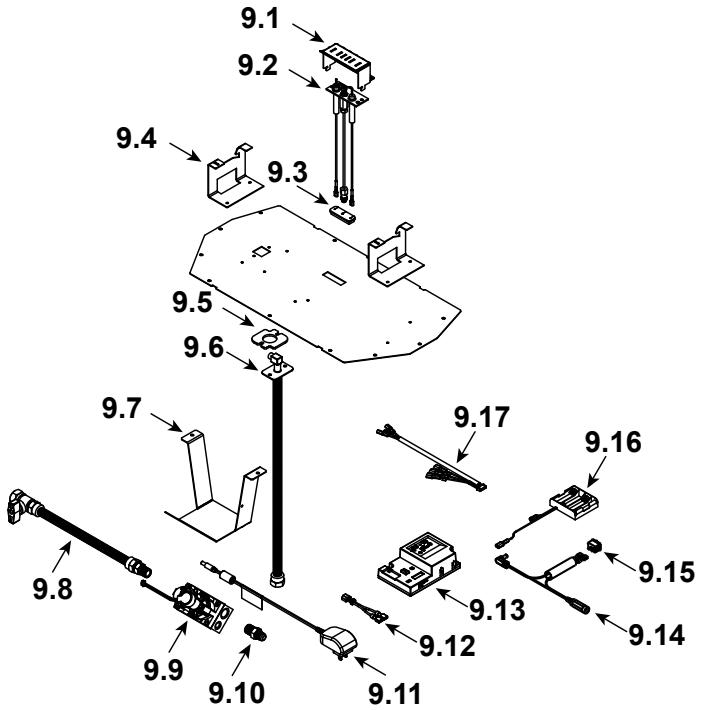

IMPORTANT: THIS IS DATED INFORMATION. Parts must be ordered from a dealer or distributor. **Hearth and Home Technologies does not sell directly to consumers**. Provide model number and serial number when requesting service parts from your dealer or distributor.

ITEM	DESCRIPTION	COMMENTS	PART NUMBER	Stocked at Depot
9.1	Pilot Shield		2491-123	
9.2	Pilot Assembly NG		2106-169	Y
	Pilot Assembly Propane		2106-170	Y
9.3	Grommet		SRV2118-420	
9.4	Burner Support, Left and Right	1 Set	2491-169	
9.5	Gasket		2025-407	
9.6	Bulkhead W/Flex Tube		4021-428	Y
9.7	Valve Bracket		2491-153	
9.8	Flex Ball Valve Assembly, 12”		SRV302-320	Y
9.9	Valve NG		SRV2166-302	Y
	Valve Propane		2166-303	Y
9.10	Male Connector	Pkg of 5	303-315/5	Y
9.11	Transformer, 6 Volt Wall		SRV2326-131	Y
9.12	Jumper Wire		SRV2187-198	Y
9.13	Module, Control IFT		SRV2326-130	Y
9.14	Reset Switch Wire		2550-135	Y
9.15	Reset Switch		2206-298	Y
9.16	Battery Holder 4AA, IFT		SRV2326-134	Y
9.17	Harness, IFT 6 Pin Wiring		SRV2326-132	Y
	Orifice NG (#42C)		582-842	Y
	Orifice Propane (.057C)		582-057	Y

Additional service part numbers appear on following page.

HEAT&GLO™

No one builds a better fire

Service Parts

COSMO42-IFT

Beginning Manufacturing Date: Oct 2011
Ending Manufacturing Date: Nov 2017

IMPORTANT: THIS IS DATED INFORMATION. Parts must be ordered from a dealer or distributor. **Hearth and Home Technologies does not sell directly to consumers**. Provide model number and serial number when requesting service parts from your dealer or distributor.

ITEM	DESCRIPTION	COMMENTS	PART NUMBER	Stocked at Depot
	Black Rock, 5 Lbs.	Qty 2 req	2188-850	
	Exhaust Restrictor		530-299	
	Gasket Assembly Contains burner neck, shutter bracket, vent, seal cap, valve plate, and air passage gaskets		2113-080	
	Touch Up Paint		TUP-GBK-12	
	Thermostat Wire		SRV2118-170	**Y**
	Clean Face Front	Black	CFTF-42-BK	
	Conversion Kit NG		NGK-42LINEAR	**Y**
	Conversion Kit Propane		LPK-42LINEAR	**Y**
	Pilot Orifice NG		SRV593-528	**Y**
	Pilot Orifice Propane		SRV593-527	**Y**
	Regulator NG		NGK-DXV-50	**Y**
	Regulator Propane		SRVLPK-DXV-50	**Y**