HEAT&GLO®

No one builds a better fire

Service Parts

6000C-IFT, 6000C-IFTLP

36" Gas Fireplace - DV

Beginning Manufacturing Date: Mar 2018
Ending Manufacturing Date: May 2023

Log Set Assembly

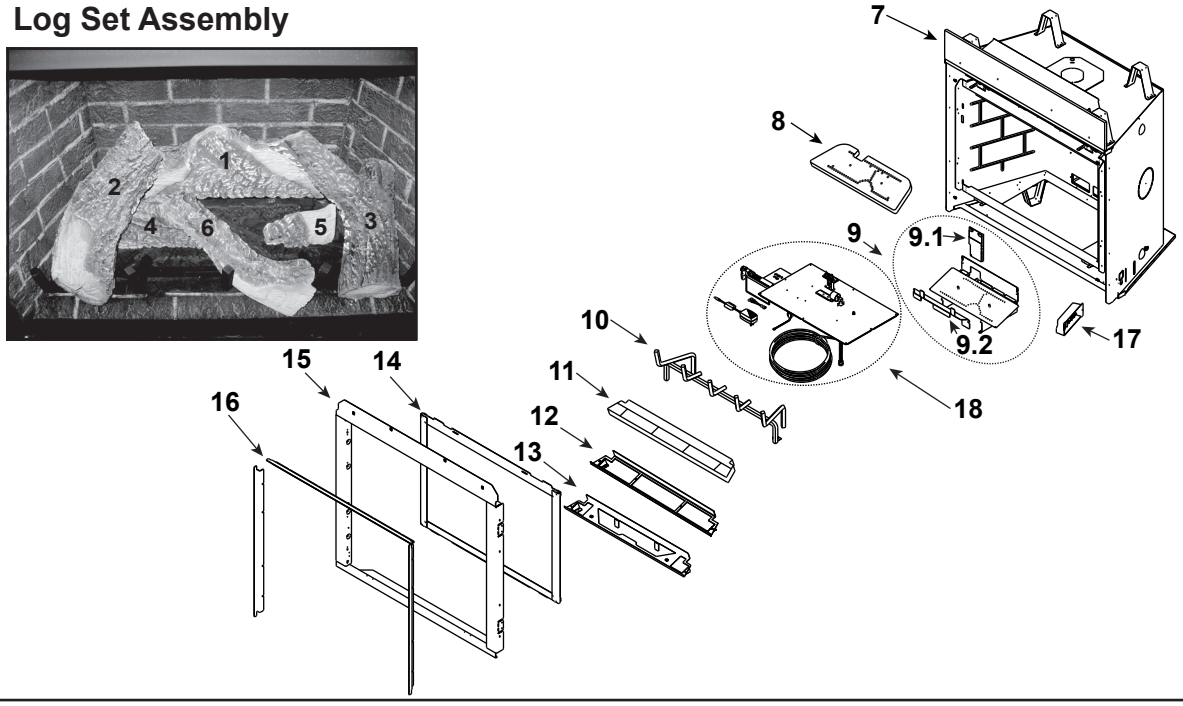

IMPORTANT: THIS IS DATED INFORMATION. Parts must be ordered from a dealer or distributor. **Hearth and Home Technologies does not sell directly to consumers**. Provide model number and serial number when requesting service parts from your dealer or distributor.

ITEM	DESCRIPTION	COMMENTS	PART NUMBER	Stocked at Depot
	Log Set Assembly		LOGS-6C	Y
1	Log 1		SRV2164-701	
2	Log 2		SRV2164-702	
3	Log 3		SRV2164-703	
4	Log 4		SRV2164-704	
5	Log 5		SRV2164-705	
6	Log 6		SRV2164-706	
7	Insulation Board		2166-136	
8	Burner Top		SRV2166-100	Y
9	Burner NG		SRV2164-007	Y
	Burner Propane		SRV2164-008	Y
9.1	Air Scoop		2170-188	
9.2	Pilot Cover		2170-181	
10	Log Grate		SRV2166-104	
11	Base Refractory		SRV6BASE-STRAT	
12	Air Baffle		2164-144	
13	Refractory Basket		2166-108	
14	Glass Door Assembly		GLA-6000G	Y
15	Surround Assembly	No longer available	2166-019	
16	Finishing Strips (Sold as kit only)		SRVFS-6	
17	Junction Box		SRV4021-013	Y

Additional service part numbers appear on following page.

HEAT&GLO®

No one builds a better fire

Service Parts

6000C-IFT, 6000C-IFTLP

Beginning Manufacturing Date: Mar 2018
Ending Manufacturing Date: May 2023

#18 Valve Assembly

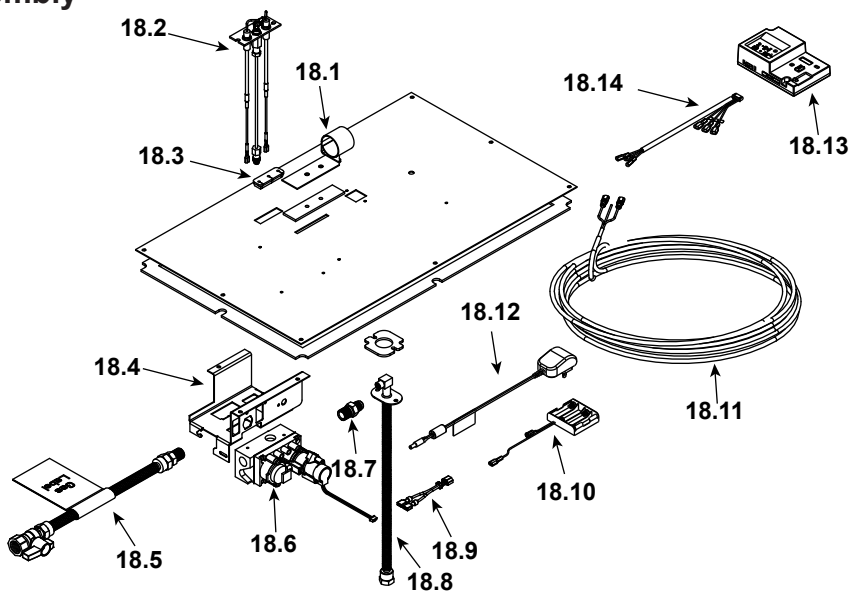

IMPORTANT: THIS IS DATED INFORMATION. Parts must be ordered from a dealer or distributor. **Hearth and Home Technologies does not sell directly to consumers**. Provide model number and serial number when requesting service parts from your dealer or distributor.

ITEM	DESCRIPTION	COMMENTS	PART NUMBER	Stocked at Depot
18.1	Shutter Bracket Assembly		2166-157	**Y**
18.2	Pilot Assembly NG		2166-370	**Y**
	Pilot Assembly Propane		2166-371	**Y**
	Pilot Tube		SRV485-301	**Y**
18.3	3-hole Grommet		SRV2118-420	
18.4	Valve Bracket		2118-104	
18.5	Flex Ball Valve Assembly		SRV302-320	**Y**
18.6	Valve NG		SRV2166-302	**Y**
	Valve Propane		2166-303	**Y**
18.7	Male Connector	Pkg of 5	303-315/5	**Y**
18.8	Bulkhead W/Tube		SRV7000-156	**Y**
18.9	Jumper Wire		SRV2187-198	**Y**
18.10	Battery Pack**		SRV2326-134	**Y**
18.11	Wall Switch Wire Assembly		SRV2118-170	**Y**
18.12	Transformer		SRV2326-131	**Y**
18.13	Module, IFT Control		SRV2326-130	**Y**
18.14	Wire Harness, IFT 6 Pin		SRV2326-132	**Y**
	Burner Orifice NG (#37C)		582-837	**Y**
	Burner Orifice Propane (#50C)		582-850	**Y**

**Fuse for battery pack can be sourced locally, not a warranty item. Specs are 250v, 3A fuse, 3/4" long

Additional service part numbers appear on following page.

HEAT & GLO

No one builds a better fire

Service Parts

6000C-IFT, 6000C-IFTLP

Beginning Manufacturing Date: Mar 2018
Ending Manufacturing Date: May 2023

IMPORTANT: THIS IS DATED INFORMATION. Parts must be ordered from a dealer or distributor. **Hearth and Home Technologies does not sell directly to consumers**. Provide model number and serial number when requesting service parts from your dealer or distributor.

ITEM	DESCRIPTION	COMMENTS	PART NUMBER	Stocked at Depot
	Exhaust Shield		385-105	
	Flue Restrictor	Qty 2 req	385-128	
	Firescreen Front	Black	FOL-36-BK	
	Gasket Assembly Contains Vent, Burner Neck, Valve Plate, LED and ADJ Air Shutter Gaskets		2166-081	
	Glass Latch Support	Qty 4 req	2382-400	Y
	Mineral Wool		050-721	
	Touch Up Paint		TUP-GBK-12	
	Conversion Kits			
	Conversion Kit NG		NGK-6C	Y
	Conversion Kit Propane		LPK-6C	Y
	Regulator NG		NGK-DXV-50	Y
	Regulator Propane		SRVLPK-DXV-50	Y
	Pilot Orifice NG		SRV593-528	Y
	Pilot Orifice Propane		SRV593-527	Y